- Product program
- Series from A to Z
- Series by function

Hydraulic Valves
Industrial Standard

aerospace
climate control
electromechanical
filtration
fluid & gas handling
hydraulics
pneumatics
process control
sealing & shielding

ENGINEERING YOUR SUCCESS.

© 2015 Copyright Parker Hannifin Corporation. All Rights Reserved

Introduction
Product index, system solutions, Drive Controlled Pump, electro-hydraulic axes, explosion-proof valves 1

Directional Control Valves
Seated valves, spool valves, direct and pilot operated 2

Proportional DC Valves
Standard, high repeatability, VCD® performance 3

Pressure Valves
Subplate and screw-in mounting 4

Flow Valves
Throttle and flow control valves, subplate and screw-in mounting 5

Check Valves
Shuttle valves, direct and pilot operated check valves, subplate and screw-in mounting 6

Sandwich Valves
For pressure, check and flow functions 7

Slip-In Cartridge Valves
According to ISO 7368, with pressure, directional, flow and check functions 8

SAE Flange Valves
For pressure, directional, flow and check functions 9

Valves for Pipe Mounting
With pressure, directional, flow and check functions 10

Electronics
Amplifiers, axis controllers and accessories 11

Accessories
Subplates, pressure gauge valves, pressure switches, pressure intensifiers 12

Notes

Contents

Description	Page
Product index, alphanumeric	1-2
Product index, by function	1-4
System solutions	1-6
Drive Controlled Pump	1-7
Electro-hydraulic axes	1-11
Explosion-proof valves	1-14
Machine directive – position papers	1-16

Product Index, Alphanumeric

Series	Description	Page
2F1C	2-way variable flow control valve	5-14
A	Subplates for DC valves	12-7
A10	Adaptor plate for regenerative and hybrid valves	12-34
A102	Subplate for pressure valves	12-11
BK	Bolt kit	12-38
C / 9C	Check valves, direct operated	10-41
C*A	2-way slip-in cartridge valve without auxiliary function	8-8
C*B	2-way slip-in cartridge valve with stroke limiter	8-9
C*C	2-way slip-in cartridge valve for pilot system mounting	8-11
C*F	2-way slip-in cartridge valve for pressure relief function	8-14
C*G	2-way slip-in cartridge valve for pressure relief function plus pilot system mounting	8-15
C*H	2-way slip-in cartridge valve with stroke limiter	8-16
C*V	2-way slip-in cartridge valve with shuttle valve	8-19
C*W	2-way slip-in cartridge valve with shuttle valve	8-20
C10 D*C	2-way slip-in cartridge valve with position control	8-87
C1DB	2-way slip-in cartridge valve, check valve	8-77
C4V	Check valve, direct operated	6-13
C4V	Check valve, pilot operated	6-18
C5P	Check valve, pilot operated, SAE flange	9-64
C5V	Check valve, direct operated, SAE flange	9-60
CB	Cartridge block	12-30
CE, CP	2-way slip-in cartridge valves without cover	8-4
CM	Check valve, direct operated	7-59
Compax3F	Electrohydraulic axis controller	11-22
CP / 9CP	Check valves, pilot operated	10-43
CPOM	Check valve, pilot operated	7-69
CPS	Check valve, pilot operated	6-16
CS	Check valve, direct operated	6-7
CS06	Sandwich plate	12-26
D*1FB	DC valve, pilot operated, proportional, with/without OBE	3-34
D*1FC	DC valve, pilot operated, proportional	3-72
D*1FC	DC valve, pilot operated, proportional, with EtherCAT	3-83
D*1FP	DC valve, pilot operated	3-107
D*1VW	DC valve, pilot operated	2-61
D*1VWR	Regenerative and hybrid valve, pilot operated	2-74
D*1VWZ	Regenerative and hybrid valve, pilot operated	2-74
D11P	DC valve, direct operated	2-85
D1FB	DC valve, direct operated, proportional, with CANopen	3-24
D1FB	DC valve, direct operated, proportional, with/without OBE	3-3
D1FC	DC valve, direct operated, proportional	3-58
D1FC	DC valve, direct operated, proportional, with EtherCAT	3-83
D1FP	DC valve, direct operated	3-86
D1FP	DC valve, direct operated, with EtherCAT	3-118
D1FV	Pressure reducing valve, proportional, with/without OBE	3-50
D1MW	DC valve, direct operated	2-33
D1SE	Seat valve, 3/2-way	2-2
D1VA	DC valve, direct operated, pneumatically	2-96
D1VL	DC valve, direct operated, hand lever	2-100
D1VP	DC valve, direct operated, hydraulically	2-85
D1VW	DC valve, direct operated	2-5
D1VW	DC valve, direct operated, with inductive position control	2-19
D1VW 8W	DC valve, direct operated, 8 watt	2-13
D1VW Ex	DC valve, direct operated, explosion proof	2-28

Series	Description	Page
D30FP	DC valve, pilot operated	3-100
D30FP	DC valve, pilot operated, with EtherCAT	3-118
D31DW	DC valve, pilot operated	2-61
D31NW	DC valve, pilot operated	2-61
D31NWR	Regenerative and hybrid DC valve, pilot operated	2-74
D3DL	DC valve, direct operated, hand lever	2-100
D3DP	DC valve, direct operated, hydraulically	2-85
D3DWR	Regenerative and hybrid valve, direct operated	2-74
D3FB	DC valve, direct operated, proportional, with / w/o OBE	3-14
D3FB	DC valve, direct operated, proportional, with CANopen	3-24
D3FC	DC valve, direct operated, proportional	3-65
D3FC	DC valve, direct operated, proportional, with EtherCAT	3-83
D3FP	DC valve, direct operated	3-93
D3FP	DC valve, direct operated, with EtherCAT	3-118
D3MW	DC valve, direct operated	2-55
D3W	DC valve, direct operated	2-39
D3W	DC valve, direct operated, with inductive position control	2-46
D4L	DC valve, direct operated, hand lever	2-100
D4P	DC valve, direct operated, hydraulically	2-85
D4S	Seat valve, pipe mounting	10-24
D4S	Seat valve, subplate mounting	6-22
D51*	Cover plate	12-28
D5S	Seat valve, SAE flange	9-33
D9L	DC valve, direct operated	2-100
D9P	DC valve, direct operated	2-85
DSBA	Pilot valve with preload valve	8-25
DSDU	Pressure reducing valve, pilot operated, TÜV certificate	8-40
DUR*L06	Flow control valve, proportional, 2-way	5-20
EVSA	Pressure reducing valve, direct operated	4-15
EX-M05	Test unit	11-40
F / 9F	Throttle check valves	10-37
F5C	Throttle valve, proportional, SAE flange	9-47
FM	Throttle check valve	7-47
FS	Throttle check valve	5-6
GFG2	Flow control valve, 2-way	5-10
H06	Sandwich plate	12-22
H10	Sandwich plate for regenerative function	12-36
LCM	Pressure compensator	7-40
MSP	Multi-station manifold	12-12
MV / 9MV	Needle valves	10-33
MVI	Check und throttle valve	5-2
N / 9N	Needle valves	10-35
NS	Needle valve	5-4
PADA	Adaptor plate	12-21
PC*MS	Flow control valve, 2-way	5-8
PCD00	E-module for proportional pressure flow control valves	11-10
PCM / 9PCM	Flow control valves	10-39
PID00	Axis controller	11-18
PRDM	Pressure reducing valve, direct operated	7-22
PRM	Pressure reducing valve, pilot operated	7-27
PRPM	Pressure reducing valve, pilot operated, proportional	7-36
PSB	Pressure switch	12-42

Product index by function see pages 4-5.

Product Index, Alphanumeric

Series	Description	Page
PWD00	E-module for proportional valves	11-2
PWDXX	E-module for proportional valves with position transducer	11-6
PZD00	E-module for command signal	11-14
R / RS*E	Pressure relief valves, pilot operated, cartridge	8-34
R06M	Pilot valve with pressure relief function	8-21
R1E02	Pressure relief valve, direct operated	4-18
R4R	Pressure reducing valve, pilot operated, pipe mounting	10-8
R4R	Pressure reducing valve, pilot operated, subplate mounting	4-83
R4R*P2	Pressure reducing valve, pilot operated, proportional, pipe mounting	10-19
R4R*P2	Pressure reducing valve, pilot operated, proportional, subplate mounting	4-95
R4S	Sequence valve, pilot operated, subplate mounting	4-75
R4U	Unloading valve, subplate mounting	4-69
R4V	Pressure relief valve, pilot operated, pipe mounting	10-2
R4V / R6V	Pressure relief valves, pilot operated, subplate mounting	4-21
R4V / R6V	Pressure relief valves, pilot operated, proportional, subplate mounting	4-49
R4V / R6V	Pressure relief valves, pilot operated, TÜV certificate, subplate mounting	4-30
R4V / R6V*P*	Pressure relief valves, pilot operated, proportional, OBE, subplate mounting	4-55
R4V*P2	Pressure relief valve, pilot operated, proportional, pipe mounting	10-14
R5A	Pressure compensator, 2-way, SAE flange	9-51
R5P	Pressure compensator, 3-way, SAE flange	9-53
R5R	Pressure reducing valve, pilot operated, SAE flange	9-17
R5R*P2	Pressure reducing valve, pilot operated, proportional, SAE flange	9-29
R5S	Sequence valve, pilot operated, SAE flange	9-13
R5U	Unloading valve, pilot operated, SAE flange	9-8
R5V	Pressure relief valve, pilot operated, SAE flange	9-2
R5V*P2	Pressure relief valve, pilot operated, proportional, SAE flange	9-23
RDM	Pressure relief valve, direct operated	7-9
RE*E*T	Pressure relief valve, pilot operated, proportional, OBE, cartridge	8-47
RE*E*W	Pressure relief valve, pilot operated, proportional, cartridge	8-43
RE06M*T	Pressure relief valve, direct operated, proportional, OBE, subplate mounting	4-43
RE06M*W	Pressure relief valve, direct operated, subplate mounting	4-39
RH	Check valve, pilot operated	10-45
RK / RB	Check valve, threaded, block mounting	6-4
RM	Pressure relief valve, pilot operated	7-13
RPDM	Pilot valve, proportional, with pressure relief function	8-23
RS06M	Pilot valve with pressure relief function	8-22
S06M	Pilot valve with pressure sequence	8-27
SCPSD	Pressure switch, electronically	12-47
SD500	Pressure intensifier	12-53
SPC	Pressure compensator	7-41
SPD	Subplate for DC valve	12-2
SPP	Subplate for pressure valves	12-8

Series	Description	Page
SPV / SPZ	Check valve, threaded	6-11
SPZBE	Check valve, threaded	6-9
SSR	Shuttle valve, block mounting	6-2
SVLA	Check valve, pilot operated, subplate mounting	8-28
SVLB	Check valve, pilot operated, cartridge	8-79
TDA	Throttle valve, 2-way, proportional, pilot operated	8-106
TDP	High-response valve, 2-way	8-113
TDW	Cartridge valve, 2/2-way, active controlled	8-94
TEA	Throttle valve, 2-way, proportional, pilot operated, with shut-off valve	8-110
TEP	High-response valve, 2-way, with shut-off valve	8-124
TK	Tie rod kit	12-39
TPQ	High-response valve, 3-way	8-136
UR*E / US*E	Unloading valves, pilot operated, cartridge	8-53
UR06M / US06M	Pilot valves with unloading function	8-26
VB	Pressure relief valve	4-5
VBY	Pressure relief valve, pilot operated	4-10
VBY*K	Pressure relief valve, proportional	4-63
VM	Pressure reducing valve, direct operated	4-78
VMY	Pressure reducing valve, pilot operated, proportional	4-87
VS	Pressure relief valve	4-2
WM	Pressure gauge selector valve	12-40
Z1DW	Shut-off valve, direct operated	7-2
ZDR	Pressure reducing valve, pilot operated, high performance	7-32
ZDV	Pressure relief valve, pilot operated, high performance	7-18
ZNS	Counterbalance valve, pilot operated	7-77
ZRD	Throttle check valve, high performance	7-55
ZRE	Check valve, pilot operated, high performance	7-74
ZRV	Check valve, direct operated, high performance	7-65
ZSRA / ZSRB	Shuttle valves, sandwich plate	8-28
ZUDB	Pressure relief valve, sandwich plate	8-24

Product index by function see pages 4-5.

Product Index by Function

Function	Description	Series	Page
2-way cartridge	Cover without auxiliary function	C*A	8-8
	Cover for pressure relief function	C*F	8-14
		C*G	8-15
	Cover with stroke limiter	C*B	8-9
		C*H	8-16
	Cover with shuttle valve	C*V	8-19
		C*W	8-20
	Cover for pilot system mounting	C*C	8-11
	Slip-in cartridge without cover	CE, CP	8-4
	Complete valve, with position control	C10 D*C	8-87
	Complete valve, directional function, active	TDW	8-94
	Check valve	C1DB	8-77
Cover plate		D51*	12-28
Check and throttle valve	Needle valve, screw-In mounting	MVI	5-2
	Needle valve, pipe mounting	MV / 9MV	10-33
		N / 9N	10-35
		NS	5-4
Axis controller	For position, pressure and speed control	PID00	11-18
Adaptor plate		PADA	12-21
Subplate	For regenerative function	A10	12-34
	For pressure valves	A102	12-11
		SPP	12-8
	For DC valves	A	12-7
		SPD	12-2
Body for 2/2-way slip-in cartridge	Cartridge block	CB	12-30
Throttle check valve	Pipe mounting	F / 9F	10-37
	Subplate mounting	FS	5-6
	Sandwich plate	FM	7-47
	High performance, sandwich plate	ZRD	7-55
Throttle valve	Proportional, pilot operated, 2/2-way, cartridge	TDA	8-106
	Proportional, pilot operated, with shut-off valve, cartridge	TEA	8-110
	Proportional, SAE flange	F5C	9-47
Unloading valve	Manually pilot operated, cartridge	UR*E / US*E	8-53
	Subplate mounting	R4U	4-69
	Pilot operated, SAE flange	R5U	9-8
Pressure relief valve	Direct operated, screw-in mounting	EVSA	4-15
	Direct operated, subplate mounting	VB	4-5
		VS	4-2
	Direct operated, proportional, subplate mounting	RE06M*W	4-39
	Direct operated, proportional, OBE, subplate mounting	RE06M*T	4-43
	Direct operated, seated type	R1E02	4-18
	Direct operated, sandwich plate	RDM	7-9
	Pilot operated, cartridge	R / RS*E	8-34
	Proportional, subplate mounting	VBY*K	4-63

function	Description	Series	Page
Pressure relief valve	Pilot operated, sandwich plate	RM	7-13
	Pilot operated, subplate mounting	VBY	4-10
	Pilot operated, high performance, sandwich plate	ZDV	7-18
	Pilot operated, pipe mounting	R4V	10-2
	Pilot operated, subplate mounting	R4V / R6V	4-21
	Pilot operated, proportional, OBE, subplate mounting	R4V / R6V*P*	4-55
	Pilot operated, proportional, cartridge	RE*E*W	8-43
	Pilot operated, proportional, OBE, cartridge	RE*E*T	8-47
	Pilot operated, proportional, subplate mounting	R4V / R6V	4-49
		R4V*P2	10-14
	Pilot operated, proportional, SAE flange	R5V*P2	9-23
	Pilot operated, SAE flange	R5V	9-2
	Pilot operated, TÜV certificate, subplate mounting	R4V / R6V	4-30
	Pilot operated, TÜV certificate, cartridge	DSDU	8-40
Pressure reducing valve	Direct operated, subplate mounting	VM	4-78
	Direct operated, sandwich plate	PRDM	7-22
	Proportional, with/without OBE, subplate mounting	D1FV	3-50
	Pilot operated, high performance, sandwich plate	ZDR	7-32
	Pilot operated, sandwich plate	PRM	7-27
	Pilot operated, pipe mounting	R4R	10-8
	Pilot operated, subpl. mounting	R4R	4-83
	Pilot operated, proportional, subplate mounting	VMY	4-87
	Pilot operated, proportional, pipe mounting	R4R*P2	10-19
	Pilot operated, proportional, subplate mounting	R4R*P2	4-95
	Pilot operated, SAE flange	R5R	9-17
	Pilot operated, proportional, SAE flange	R5R*P2	9-29
Pressure reducing valve	Pilot operated, proportional, sandwich plate	PRPM	7-36
Pressure switch	Electro-hydraulic	PSB	12-42
	Electronics	SCPSD	12-47
Pressure intensifier		SD500	12-53
Pressure compensator	2-way, sandwich plate	LCM	7-40
	2/3-way, sandwich plate	SPC	7-41
	2-way, SAE flange	R5A	9-51
	3-way, SAE flange	R5P	9-53
Sequence valve	Pilot operated, subplate mounting	R4S	4-75
	Pilot operated, SAE flange	R5S	9-13
Servo drive	For closed loop postion and force control	Compax3F	11-22
Electronics	For proportional pressure/flow control valves	PCD00	11-10
	For proportional valves	PWD00	11-2
		PWDXX	11-6
	For command signal processing	PZD00	11-14
Pressure gauge valve		WM	12-40
Test unit	For Parker prop. and servo proportional valves with OBE	EX-M05	11-40

Alphanumeric product index see pages 2-3.

Product Index by Function

function	Description	Series	Page
Servo proportional valve	Direct operated, subplate mounting	D1FP	3-86
		D3FP	3-93
	Direct operated, with EtherCAT, subplate mounting	D*FP	3-118
	Pilot operated, subpl. mounting	D*1FP	3-107
	Pilot operated, with EtherCAT, subplate mounting	D*1FP	3-118
	Pilot operated, subpl. mounting	D30FP	3-100
	Pilot operated, with EtherCAT, subplate mounting	D30FP	3-118
	Pilot operated, proportional, 2-way, cartridge	TDP	8-113
	Pilot operated, proportional, 2-way, cartridge with shut-off valve	TEP	8-124
	Pilot operated, proportional, 3-way, cartridge	TPQ	8-136
Check valve	Direct operated, pipe mounting	C / 9C	10-41
	Direct operated, subplate mounting	C4V	6-13
		CS	6-7
	Direct operated, SAE flange	C5V	9-60
	Direct operated, sandwich plate	CM	7-59
		ZRV	7-65
	Block mounting	RK / RB	6-4
		SPV / SPZ	6-11
		SPZBE	6-9
	Pilot operated, block mounting	SVLB	8-79
	Pilot operated, pipe mounting	CP / 9CP	10-43
		RH	10-45
	Pilot operated, subplate mounting	C4V	6-18
		CPS	6-16
		SVLA	8-28
	Pilot operated, SAE flange	C5P	9-64
	Pilot operated, sandwich plate	CPOM	7-69
	Pilot operated, sandwich plate, high performance	ZRE	7-74
Regenerative and hybrid DC valve	Pilot operated, subplate mounting	D*1VWR	2-74
		D*1VWZ	2-74
		D31NWR	2-74
	Direct operated, subpl. mounting	D3DWR	2-74
Multi-station manifold		MSP	12-12
Bolt kit		BK	12-38
Counterbalance valve	Pilot operated, high performance, sandwich plate	ZNS	7-77
Tie rod kit		TK	12-39
Flow control valve	2-way, subplate mounting	PC*MS	5-8
	2-way, pipe mounting	PCM / 9PCM	10-39
	2-way, subplate mounting	2F1C	5-14
		GFG2	5-10
	Proportional, subplate mounting	DUR*L06	5-20
Pilot valve, pressure function	With unloading function, subplate mounting	UR06M / US06M	8-26
	With pressure relief function, subplate mounting	RS06M	8-22
		R06M	8-21
	With preload function, subplate mounting	DSBA	8-25
	With sequence function, subplate mounting	S06M	8-27
	Proportional, with pressure relief function, sandwich plate	RPDM	8-23
	With pressure reducing function, sandwich plate	ZUDB	8-24

function	Description	Series	Page
Shuttle valve	Screw-in mounting	SSR	6-2
	Sandwich plate	ZSRA / ZSRB	8-28
Directional seat valve	3/2-way, subplate mounting	D1SE	2-2
	Pipe mounting	D4S	10-24
	Subplate mounting	D4S	6-22
	SAE flange	D5S	9-33
DC valve, direct operated	Direct operated, hydraulically, subplate mounting	D11P	2-85
		D1VP	2-85
		D3DP	2-85
		D4P	2-85
		D9P	2-85
	Direct operated, solenoid, 8 watt, subplate mounting	D1VW 8 Watt	2-13
	Direct operated, solenoid, explosion proof, subplate mounting	D1VW	2-28
	Direct operated, solenoid, with inductive position control, subplate mounting	D1VW	2-19
		D3W	2-46
	Direct operated, solenoid, subplate mounting	D1VW	2-5
		D1MW	2-33
		D3MW	2-55
		D3W	2-39
	Direct operated, solenoid, sandwich plate	Z1DW	7-2
	Direct operated, hand lever, subplate mounting	D1VL	2-100
		D3DL	2-100
		D4L	2-100
		D9L	2-100
	Direct operated, pneumatically, subplate mounting	D1VA	2-96
	Direct operated, proportional, with CANopen, subplate mounting	D1FB	3-24
		D3FB	3-24
	Direct/pilot operated, proportional, with OBE and position feedback, with EtherCAT, subplate mounting	D*FC	3-83
	Direct operated, proportional, with OBE and position feedback, subplate mounting	D1FC	3-58
		D3FC	3-65
	Direct operated, proportional, with/without OBE, subplate mounting	D1FB	3-3
		D3FB	3-14
DC valve, pilot operated	Pilot operated, subplate mounting	D*1VW	2-61
		D31DW	2-61
		D31NW	2-61
	Pilot operated, proportional, with OBE and position feedback, subplate mounting	D*1FC	3-72
	Pilot operated, proportional, with/without OBE, subplate mounting	D*1FB	3-34
Sandwich plate		CS06	12-26
		H06	12-22
		H10	12-36

Alphanumeric product index see pages 2-3.

System Solutions

Parker is more than a supplier of excellent components. Together with our customers, we develop innovative systems solutions. In this industrial valves catalogue, we would like to point out to you our special competence in industrial manifold blocks. Our experienced, highly motivated team answers technical needs with complete, sound solutions.

Our performance spectrum comprises a complex understanding of the job, project management, design, and production, including final tests of manifold blocks on our modern, automated test beds. In addition we offer compact hydraulic axis controls.

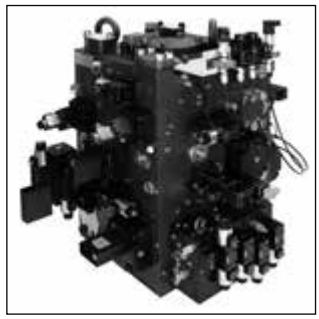

When you entrust us with your system requirements, you can rely on getting an optimal solution from the Parker valves program with all components used in accordance with their characteristics. Furthermore you can rely on us taking full responsibility for all our valves, electronics and combined functions within the system.

In addition to customized solutions Parker also supplies standardized press controls (e.g. certified versions in nominal sizes NG06 up to NG50) as shown in our brochure HY11-3235/UK "Hydraulics for Press Controls". Contact your Parker representation for information and offerings concerning your hydraulics.

Drive Controlled Pump

The Drive Controlled Pump system solutions from Parker are variable-speed hydraulic pump systems. They essentially consist of an AC drive unit (frequency controller and electronics), an asynchronous motor or synchronous servo motor, as well as a hydraulic pump. They enable the central, regulated hydraulic supply of all drives. Thus, they provide the exact power that is required in the cycle at all times.

The controller continuously records target values for the volume flow and/or pressure of the machine control system and compares them to actual pressure value. The drive speed of the electric motor is regulated so that the pump provides the exact amount of oil required to achieve the target value.

The Drive Controlled Pump Catalogue HY11-3352/UK contains complete product information including the ordering code. Detailed information on all Parker components can be found in the individual product catalogues (see next page).

Features

- Suitable for 400 V supply
- Change-over pressure/volume flow control
- Optimum dimensioning of all components using the Parker DriveCreator software
- Standard interfaces for simple conversion of conventional pump systems
- Dual pump systems for larger volume flow possible – also as combination of variable and fixed displacement pumps
- High precision and dynamic operation for flow and pressure control
- High energy efficiency through optimum adjustment to cycle requirements
- Low noise emissions through optimized pump design and speed adjustment

Combination vane pump/ synchronous servo motor with Compax3

Combination vane pump/ standard asynchronous motor with AC30V

Combination axial piston pump/ standard asynchronous motor with AC30V

1

Components of the Drive Controlled Pump system

1. Pump

- Vane pump T7, catalogue HY29-0110, or
- Axial piston pump PVplus, catalogue HY30-3245, or
- Combination of vane pump and axial piston pump
- Mounting accessories for the motor pump assembly:
  - Coupling
  - Pump bellhousing
  - Pump flange

2. Motor

- Asynchronous standard motor or
- Synchronous servo motor, catalogue 192-061011 and 192-061013

3. AC Drive Controller

- AC30V, catalogue 192-300022
- Compax3, catalogue 192-120013

4. Accessories that may be required [1)]

- Shield connection
- Power cables
- Sensor cables
- Braking resistor
- Mains filters
- Pressure transducer

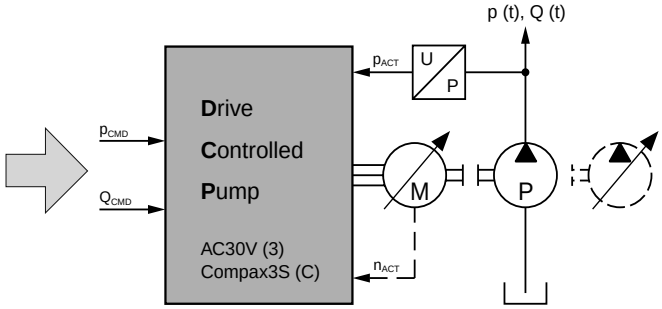

Parker DriveCreator

For optimum yet simple selection and dimensioning of the components Parker offers a unique software tool: the Parker DriveCreator. Firstly, the cycle data (pressure and flow) is entered. Subsequently, the optimum pump or combination of pumps is selected using this data, and then motor and drive suitable for the power consumption.

The Parker DriveCreator calculates the best combination of components possible with the highest degree of energy efficiency.

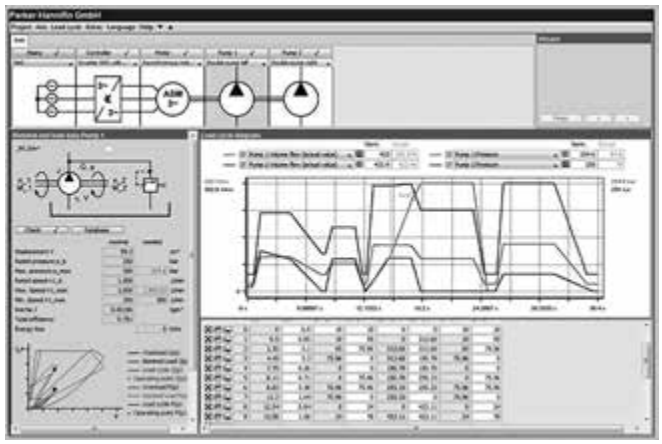

[1)] Not included in the scope of delivery.

Vane pumps

Parker vane pumps are especially suited to variable speed applications. They enable very quick changes in pressure at a very high flow rate reproducibility and at a low noise level. High operating pressures of up to 320 bar and small dimensions reduce installation costs. Reduced pressure increases life-span.

Features

- High volumetric efficiency
- Low noise design
- High mechanical efficiency (generally over 94 %)
- Wide speed range (300–3,000 rpm)
- Impervious to particle contamination thanks to the double lip design

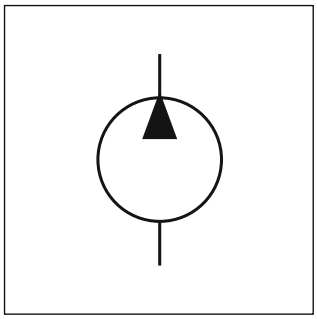

Axial piston pumps

Parker axial piston pumps are particularly characterized by their low noise level based on low-pulsation and a rigid housing. They are used if high peak pressures must be generated or high pressures must be maintained for long periods.

Features

- Low noise level
- Fast response
- Service-friendly
- High self-priming speed
- Thru drive for 100 % nominal torque

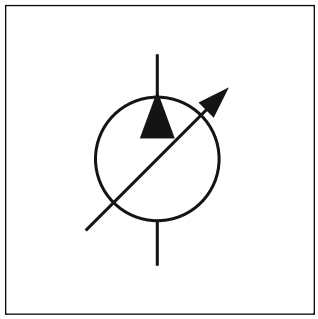

Standard asynchronous motors

The standard asynchronous motors are characterized by their versatility, robustness and high efficiency. They fulfill the IE2 efficiency standard (high efficiency), and therefore allow large energy savings and conserves the environment. The design offers maximum flexibility and minimum cost when installing.

Features

- Long life-span
- Thermistor motor protection incl.
- High overload reserves in continuous operation
- Low weight

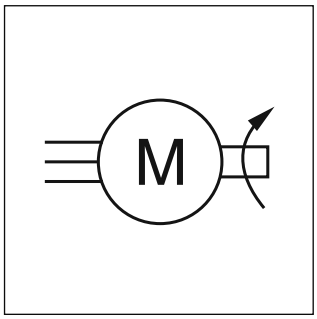

Synchronous motors

The series MH and SMB of highly dynamic, brushless synchronous motors from Parker provides generously-sized mechanical components and low inertia. Thanks to the high quality of the Neodymium-Iron-Boron magnets and the encapsulation technique used to fasten them to the shaft, they can achieve high acceleration and withstand high overload without risking the demagnetization or detachment of the magnets.

Features

- Protection class IP64
- Ambient temperature -10/+40 °C
- High power density
- Lifetime-lubricated ball bearings
- Convection cooling, fan as option available

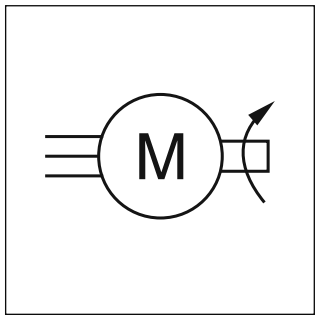

AC drive controller AC30V

As a central component of the Drive Controlled Pump, the AC30V series covers the entire spectrum of speed-regulated applications for asynchronous and synchronous motors. I/O-Module can be added easily if required. Modules that are required for the Drive Controlled Pump are equipped ex works.

Features

- Integrated hydraulic functions
- Integrated web server
- Sensorless vector control
- Safety torque off
- Software tool for configuration, commissioning, optimisation, programming and maintenance

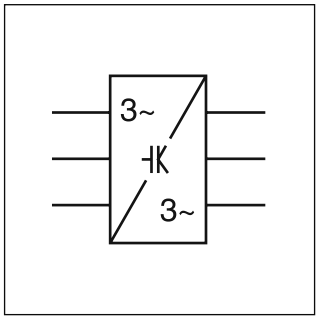

Compax3

Compax3 is Parker's global servo drive. It provides maximum openness and flexibility for the widest range of applications. As a component of the Drive Controlled Pump, it is used as drive for synchronous servo motors. A power range of 1 to 110 kVA is available. It offers modern control technology and supports the common fieldbus interfaces.

Features

- Power range of 1 to 110 kVA.
- Fieldbus communication with open standards
- Extensive safety technology
- Commissioning software

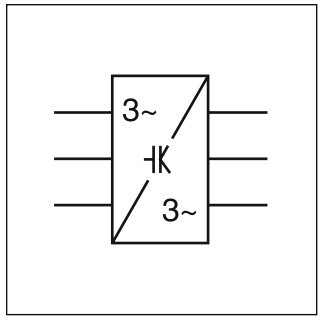

Electro-Hydraulic Axes

Under the ordering code AXC Parker offers a range of configured standard closed loop axes for a wide range of applications such as

- Material handling and feed systems
- Wood working and plastics industries
- Machine tools (loading through vertical actuators)
- Paper industry (lifting and tensioning)
- Automotive industry (transport and feeding)

The electro-hydraulic axes consist of proven standard components and are mounted and tested as one unit. Combined with control electronics, the electro-hydraulic axes are ready for use, requiring only connection lines to the system.

With the Parker electro-hydraulic linear drives, position accuracy can be achieved reliably and cost-effectively in all 3 performance classes:

Performance class 1: < ±1 mm*

Performance class 2: < ±0.3 mm*

Performance class 3: < ±0.05 mm*

*without external load and friction

The standard axes catalogue HY11-3341/UK contains all information required to select and order a complete standard axis.

1

Technical features

- Stroke up to 3000 mm
- Push force up to 620 kN
- Pull force up to 320 kN
- Position and force control
- Speed up to 1 m/s
- Overload protection
- Integrated position feedback
- Long life time and low maintenance
- Only P and T need to be connected to the power supply
- 8 sizes (40/28 up to 200/140)
- Axis controller (option)
- Blocking valves (option)
- Pressure overload protection (option)
- Standard axis ordering code

Performance diagrams

In addition to the basic technical data the standard axes catalogue provides easy to use information for the right configuration.

With individual diagrams for all cylinder and valve dimensions the axes can easily be selected according to the force and speed requirements.

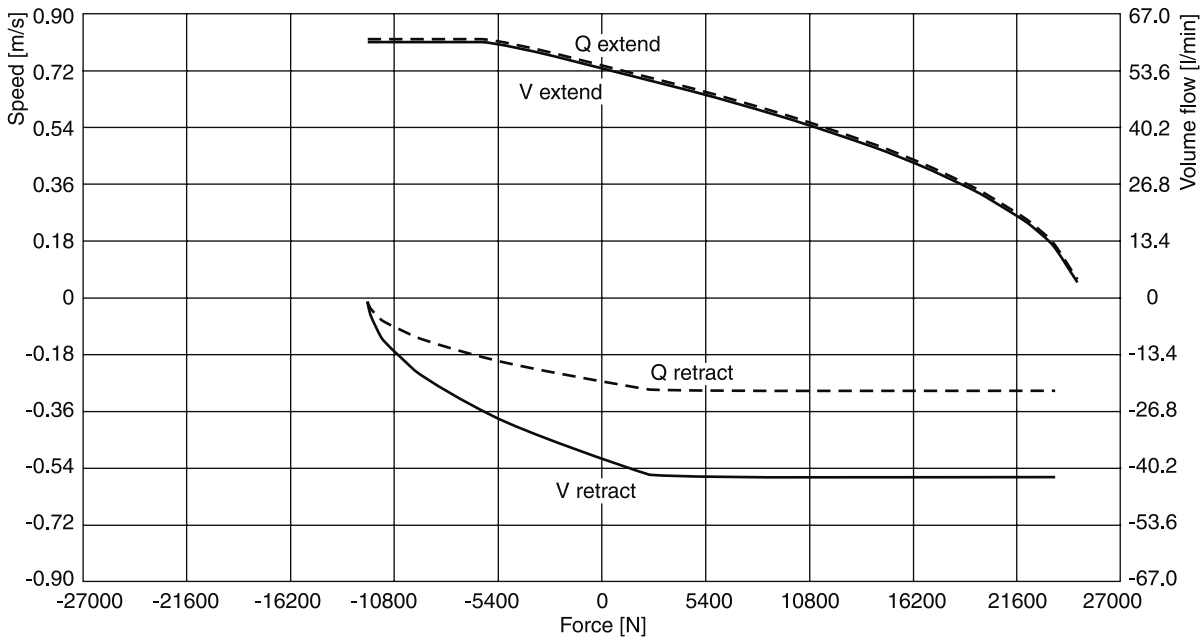

Control Valves

For the 3 performance classes different valve series are used. Starting with standard proportional valves for simple closed loop solutions to highly sophisticated DFplus valves in performance class 3.

Performance class 1: D*FB series

Performance class 2: D*FB OBE series

Performance class 3: D*FP series

Controllers

Optionally the axes can be ordered with controller. In performance class 1 the axes are controlled by Parker digital modules, in classes 2 and 3 the highly sophisticated Compax 3F controller is used.

Performance class 1: PWDXX digital module

Performance classes 2 and 3: Compax3F axis controller

Explosion-Proof Valves

Parker has expanded the range of applications for its explosion-proof industry hydraulic valves. All series (exception: RE06M*W*EE) are not only ATEX certified but also equipped with IECEx compliant solenoids.

Parker has certified the solenoids of these explosion-proof directional control valves in accordance with IECEx standard for equipment class 2G, as well ensuring ATEX compliance. Both the performance characteristics and the dimensions are identical to the values of the previous versions, so that the valves can also easily be used as a replacement in existing systems.

All valves offered in this chapter are ATEX certified for usage in zone 1 and 2, series RE06M*W*EE additionally for zones 21 and 22.

The Explosion-Proof Valves Catalogue HY11-3343/UK contains further product information and the ordering codes.

In the following we give you a short overview of our range of explosion-proof valves.

Directional control valve, series D1VW explosion proof

The D1VW with explosion proof solenoids is the ATEX version of the standard D1VW series. It provides high functional limits up to 60l/min in combination with a very low, energy-saving pressure drop. All explosion proof solenoids are DC design. The valves for AC operate with integrated rectifier.

Further information about this valve can be found in chapter 2.

Pilot operated directional control valve, series D*W*EE explosion proof

The D*1*W*EE with explosion proof solenoids is based on the standard D*1*W series. The pilot operated valves are available in 4 sizes from NG10 to NG32. All of them are piloted by a D1VW valve. All explosion proof solenoids are DC design. The valves for AC operate with integrated rectifier.

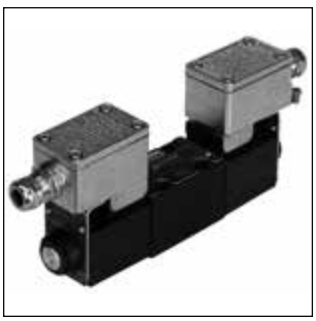

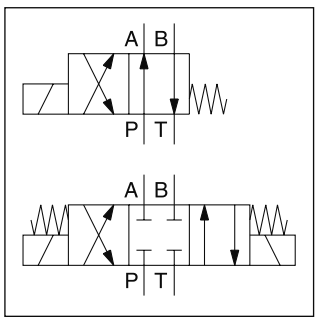

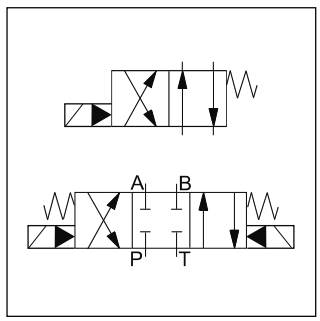

Direct operated proportional DC valve, series D1FB*EE explosion proof

The D1FB*EE series with explosion proof solenoids is the ATEX version of the standard D1FB series. The parameters can be saved, changed and duplicated in combination with the digital power amplifier PWD00A-400 (to be used in an explosion proof cabinet or outside of the hazardous area).

Features

- Spool/sleeve and spool/body
- High repeatability from valve to valve
- Low hysteresis
- Manual override

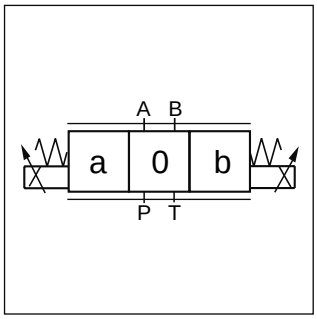

Pilot operated proportional DC valve, series D*1FB*EE explosion proof

The D*1FB*EE series with explosion proof solenoids is the ATEX certified version of the standard D*1FB series. The valves work with barometric feedback of the main stage to the pressure reducing pilot valve. The parameters can be saved, changed and duplicated in combination with the digital power amplifier PWD00A-400 (to be used in an explosion proof cabinet or outside of the hazardous area).

Features

- Progressive flow characteristics for sensitive adjustment of flow rate
- High flow capacity
- 4 sizes, NG10 to NG32

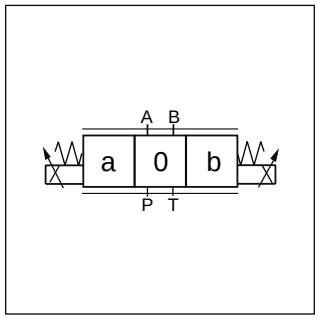

Proportional pressure reducing valve, series D1FV*EE explosion proof

The D1FV*EE series with explosion proof solenoids is based on the standard D1FV series. In combination with the digital power amplifier PWD00A-400 (to be used in an explosion proof cabinet or outside of the hazardous area), the parameters can be saved, changed and duplicated. The D1FV values control the pressure in the A- or B-ports using the barometric feedback principle.

Features

- Barometric feedback
- High repeatability from valve to valve
- Low hysteresis
- Manual override

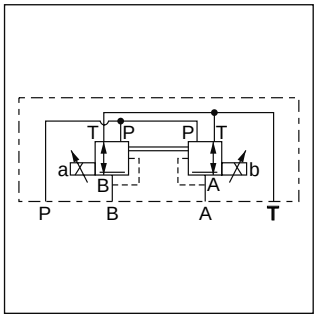

Direct operated prop. pressure valve, series RE06M*W*EE explosion proof

ATEX certified pressure relief valves of the series RE06M*W*EE are direct operated proportional valves typically used as remote control valves for flow rates below 3 l/min. The optimum performance can be achieved in combination with the digital amplifier module PCD00A-400 (to be used in an explosion proof cabinet or outside of the hazardous area).

Features

- Direct operated with proportional solenoid
- Very low pressure adjustment of pmin
- 2 pressure ports, A and P (1 pressure port for XG087)
- Subplate mounting according to ISO 6264
- 3 pressure stages

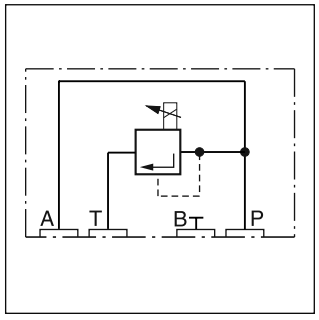

Position Paper of HCD regarding machinery directive 2006/42/EG DIN EN ISO 13849

Products made by the Hydraulic Controls Division (HCD) of Parker Hannifin GmbH are excluded from the scope of the machinery directive following the „*VDMA Position Paper on the Implementation of the Machinery Directive 2006/42/EC in the Fluid Power Industry*" (Rev. 23.06.2010).

The only exceptions are products that comply to the definition of a safety component, defined in article 2 c) of the machinery directive.

All HCD products are designed and manufactured considering the basic as well as the proven safety principles according to EN 13849-2:2012, so that the machines in which the products are incorporated meet the essential health- and safety requirements.

Components that fall within the scope of DIN EN ISO 13849-1, *Safety of machinery – Safety related components of controls – part 1: General principles for design* do not necessarily have to be placed on the market as safety components in accordance with the machinery directive.
A component that is placed on the market but not as a safety component does not necessarily provide a lower safety level.

Confirmations for components to be proven components, e. g. for validation of hydraulic systems, can only be provided after an analysis of the specific application, as the fact to be a proven component mainly depends on the specific application.

$MTTF_d$ values for our products are part of the technical data within our catalogue.

$B10_d$, DC and CCF values depend on cycle time, running time and system design. Therefore they can only be provided application specific.

Position Paper Machinery Directive 2006/42/EG „safety components“

Parker Hannifin GmbH confirms, that our safety components comply with the machinery directive 2006/42/EC, as long as they are used as intended. The EC Declaration of conformity includes possible conformity to other directives as well.

Safety components are:

Pressure relief valves according to directive 97/23/EG

Type R4V*V , R4V*W
Type R6V*V, R6V*W
Type DSDU 578 P20E TÜV
Type DSDU 1078 E*E TÜV

Intended usage:

Pilot operated pressure relief valves to limit a maximum pressure, pre-adjusted unchangeable to this maximum pressure.
The intended usage is provided as long as the valves are integrated into the system as follows:

- P-port connected directly to the point where the pressure should be limited
- T-port connected directly to tank without any backpressure

Size of the valve and the pipes have to be matched to the maximum possible flow and pressure.

Clamping valves according to EN 201:2010

2-way-slip in cartridges	**Type C10-DEC 101-SC**
	Type C13-DEC 107-SC, C18-DEC 107-SC
Direct operated directional control valves NG6	**Type D1VW*-SC, D1DW*-SC;**
Direct operated directional control valves NG10	**Type D3W*-SC, D3DW*-SC**
Pilot operated directional control valves NG10	**Type D31DW*-SC**
Pilot operated directional control valves NG16	**Type D41VW*-SC**
Pilot operated directional control valves NG25	**Type D81VW*-SC, D91VW*-SC**

Intended usage:

For hydraulically operated clamping units of injection molding machines according to the manufacturer's declaration of incorporation.

Press controls according to DIN EN 693:2011

Press control NG06	**Type PADZ2780.3xx**
Press control NG10	**Type PADZ2781.3xx**
Press control NG16	**Type PADZ2782.3xx**
Press control NG25	**Type PADZ2783.3xx**
Press control NG50	**Type PADZ2784.3xx**

Intended usage:

To be incorporated into hydraulic presses according to DIN EN 693:2011.

Declaration of conformity is valid from 29.12.2009 for all new above listed products. For earlier delivered products conformity is not possible to declare.

The declaration of product conformity does not include a declaration of conformity for the machinery in which our product is incorporated. The conformity for the machinery only can be declared by the person who places the machinery on the market inside the EU for the first time.

If the listed components are incorporated in already used machinery (placed on the market before 1995) and if they do not change the function of this machinery significantly, the machinery must not be put into operation until the conformity of the machinery to national regulations, especially safety regulations, is declared.

If the function of the machinery is changed significantly, conformity to the machinery directive 2006/42/EC has to be declared.

A declaration of conformity according to machinery directive 2006/42/EC for other Parker products has to be proved depending on the special application.

Notes

Series	Description	Direct operated					Pilot operated				Page
	DIN / ISO	06	10	16	25	32	10	16	25	32	
	Seat valves, electrically operated										
D1SE		•									2-2
	Spool valves, electrically operated										
D1VW	Standard, soft shift	•									2-5
D1VW	8 Watt solenoid	•									2-13
D1VW	Inductive position control	•									2-19
D1VW	Explosion proof (conform to ATEX and IECEx)	•									2-28
D1MW	For wash down applications	•									2-33
D3W	Standard		•								2-39
D3W	Inductive position control		•								2-46
D3MW	For wash down applications		•								2-55
D31DW	Standard and position control						•				2-61
D31NW	Highest flow						•				
D41VW	Standard and inductive position control							•			
D81/91VW	Standard and inductive position control								•		
D111VW	Standard and inductive position control									•	
	Spool valves, electrically operated, regenerative and hybrid design										
D3DWR	Hybrid configuration with sandwich plate		•								2-74
D31NWR	Hybrid configuration with sandwich plate						•				
D41VWR/Z								•			
D91VWR/Z									•		
D111VWR/Z										•	
	Spool valves, hydraulically operated										
D1VP		•									2-85
D3DP			•								
D4P				•							
D9P					•						
D11P						•					
	Spool valves, pneumatically operated										
D1VA		•									2-96
	Spool valves, mechanically operated										
D1VL		•									2-100
D3DL			•								
D4L				•							
D9L					•						
	Accessories										
	Plugs										2-111
	Actuator kits										2-112
	O-rings and seal kits										2-113
	Slip-in orifices										2-114
	Mounting patterns										2-115

2

2

The directional valve type D1SE is equipped with a wet pin armature solenoid, drain free tapered poppet and compatible with the standards DIN NG06, CETOP 03, and NFPA D03. Due to the 3/2-way design, port A is either connected with P or discharged in the tank. The neutral position (solenoid not activated) is taken automatically by a return spring. This position remains until the solenoid is energized.

The valve poppet including activation lever and the armature of the solenoid are located in the pressurized oil chamber of connection T. The valve poppet is designed such that there can be no differential area in its axial operational direction (opening, closing). Thus it is statically pressure-balanced so that the valve can be switched in both flow directions even under pressure.

The unit has an all-steel design, the important functional inner parts are hardened, the poppet and seat are grinded.

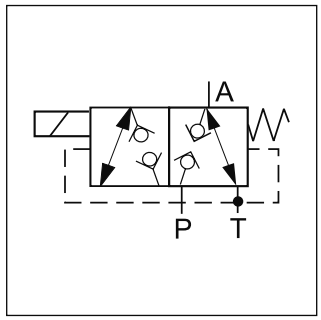

Ordering code

D	1	S	E		B			W	
Directional control valve	Size DIN NG06 CETOP 03 NPPA D03	Seat valve	Wet pin armature solenoid, flanged	Spool type	Style	Seals	Solenoid voltage	Connector as per EN 175301-803 without plug [1]	Design series (not required for ordering)

Code	Spool type
30	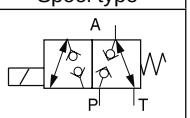
83	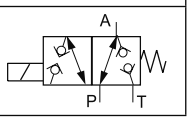

Code	Voltage
K	12 V=
J	**24 V=**
U [2]	98 V=
G [2]	205 V=

Code	Seals
N	**NBR**
V	FPM

Bold letters =
Short-term availability

Solenoids for repair

Voltage	Ordering code
12 V=	7329700 - 12 V
24 V=	7329700 - 24 V
98 V=	7329700 - 98 V
205 V=	7329700 - 205 V

[1] Please order plug separately.

[2] To be used in combination with rectifier plugs at 120 VAC / 230 VAC power supply.

General					
Design		Directional poppet valve			
Actuation		Solenoid			
Size		DIN NG6 / CETOP 03 / NFPA D03			
Mounting interface		DIN 24340 A6 / ISO 4401 / CETOP RP 121-H / NFPA D03			
Mounting position		Unrestricted, preferably horizontal			
Ambient temperature	[°C]	-25...+60, observe permissible duty cycle			
$MTTF_D$ value	[years]	150			
Weight	[kg]	1.5			
Hydraulic					
Max. operating pressure	[bar]	P, A, T: 350			
Fluid		Hydraulic oil according to DIN 51524			
Fluid temperature	[°C]	-20...+60 (NBR: -25...+70)			
Viscosity permitted	[cSt] / [mm²/s]	10...500			
Viscosity recommended	[cSt] / [mm²/s]	30...80			
Filtration		ISO 4406 (1999); 18/16/13			
Flow max.	[l/min]	20			
Static / Dynamic					
Step response	[ms] [ms]	Energized: approx. 50 De-energized: approx. 60			
Electrical characteristics					
Duty ratio		See diagram			
Max. switching frequency	[1/h]	2000			
Protection class		IP65 in accordance with EN 60529 (with correctly mounted plug-in connector)			
	Code	K	J	U	G
Supply voltage	[V]	12 V =	24 V =	98 V =	205 V =
Tolerance supply voltage	[%]	±10	±10	±10	±10
Current consumption	[A]	1.95	1.1	0.25	0.13
Power consumption	[W]	23.4	26.4	24.3	26.6
Solenoid connection		Connector as per EN 175301-803			
Wiring min.	[mm²]	3 x 1.5 recommended			
Wiring length max.	[m]	50 recommended			

With electrical connections the protective conductor (PE ⏚) must be connected according to the relevant regulations.

Performance curve Δp-Q

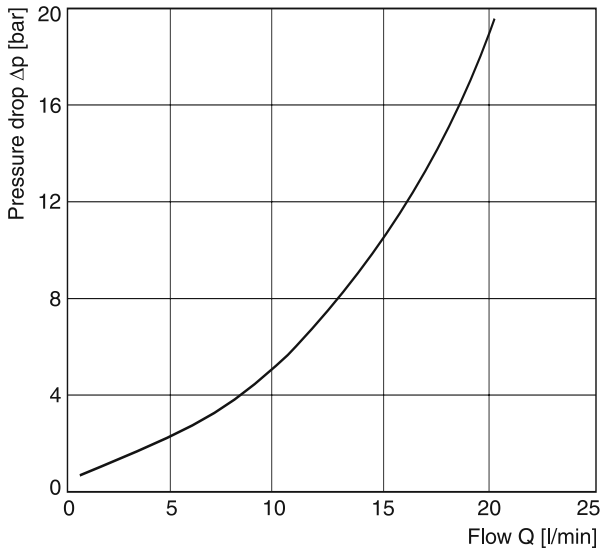

Duty cycle versus ambient temperature

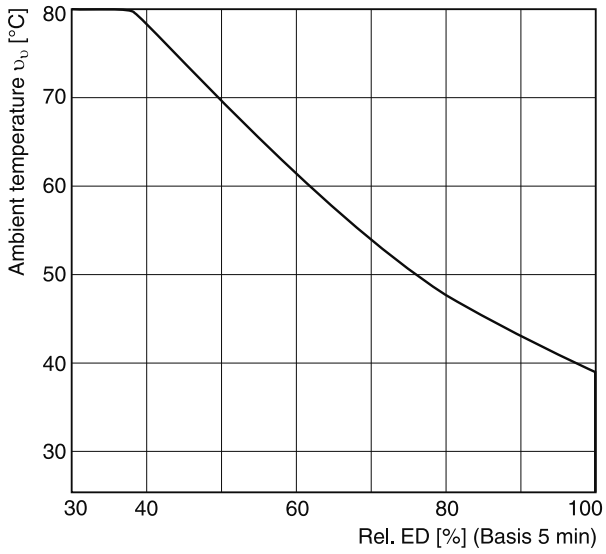

All characteristic curves measured with HLP46 at 50 °C.

2

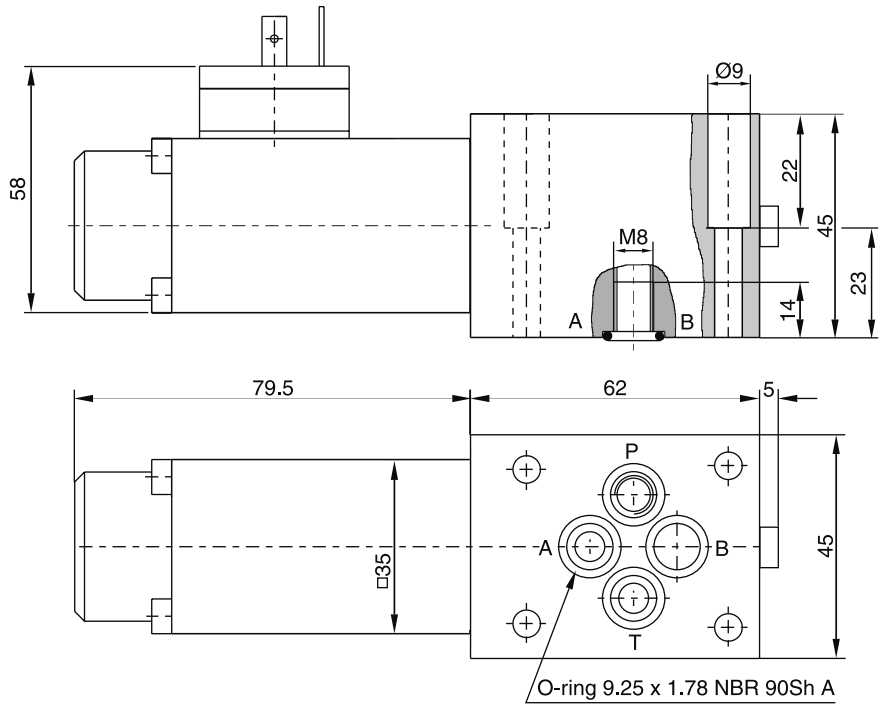

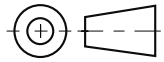

Surface finish	Kit			Kit
R_{max}6.3 ⊿ 0.01/100	BK375	4x M5x30 ISO 4762-12.9	7.6 Nm ±15 %	**NBR: SK-D1SE-70** FPM: DK-D1SE-V70

Subplates and manifolds see chapter 12.

The space necessary to remove the plug per EN 175301-803, design type AF is at least 15 mm.
The torque for the screw M3 of the plug has to be 0.5 to 0.6 Nm.

The NG06 directional control valve series D1VW provides high functional limits up to 80 l/min in combination with a very low, energy-saving pressure drop.

A wide variety of spool options allows to design an unlimited number of hydraulic circuits.

Versions with 8 watt coils, position control, ATEX approval, surface protection and connector variants are shown in the following chapters.

The valve is also available as sandwich type, see series Z1DW in chapter 7.

Valves with explosion proof solenoids Ex e mb II see series D1VW Explosion Proof in chapter 2 and catalogue HY11-3343.

Download: www.parker.com/euro_hcd - see “Literature”

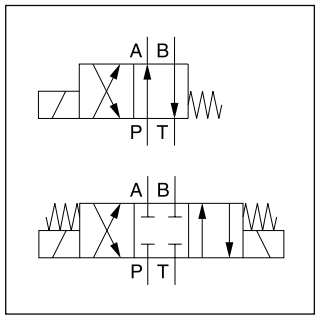

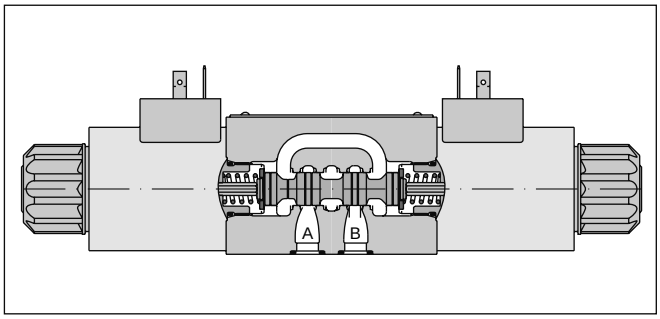

Technical data

General							
Design		Directional spool valve					
Actuation		Solenoid					
Nominal size		DIN NG06 / CETOP 03 / NFPA D03					
Mounting interface		DIN 24340 A6 / ISO 4401 / CETOP RP 121-H / NFPA D03					
Mounting position		unrestricted, preferably horizontal					
Ambient temperature	[°C]	-25...+60					
$MTTF_D$ value	[years]	150					
Weight	[kg]	1.5 (1 solenoid), 2.1 (2 solenoids)					
Vibration resistance	[g]	10 Sinus 5...2000 Hz acc. IEC 68-2-6 30 Random noise 20...2000 Hz acc. IEC 68-2-36 15 Shock acc. IEC 68-2-27					
Hydraulic							
Max. operating pressure	[bar]	P, A, B: 350; T: 210 (DC), T: 140 (AC)					
Fluid		Hydraulic oil according to DIN 51524					
Fluid temperature	[°C]	-20 ... +70 (NBR: -25...+70)					
Viscosity permitted	[cSt] / [mm²/s]	2.8...400					
Viscosity recommended	[cSt] / [mm²/s]	30...80					
Filtration		ISO 4406 (1999); 18/16/13					
Flow max.	[l/min]	80 (see shift limits)					
Leakage at 50 bar	[ml/min]	Up to 10 per flow path, depending on spool, up to 15 per flow path for spool type 008 + 009					
Static / Dynamic							
Step response		see table response time					
Electrical characteristics							
Duty ratio	[%]	100 ED; CAUTION: coil temperature up to 150 °C possible					
Max. switching frequency	[1/h]	15000 (not for soft shift)					
Protection class		IP65 in accordance with EN 60529 (with correctly mounted plug-in connector)					
	Code	K	J	U	G	Y	T
Supply voltage	[V]	12 V =	24 V =	98 V =	205 V =	110 V at 50 Hz/ 120 V at 60 Hz	230 V at 50 Hz/ 240 V at 60 Hz
Tolerance supply voltage	[%]	±10	±10	±10	±10	±5	±5
Current consumption hold	[A]	2.72	1.29	0.33	0.13	0.6 / 0.55	0.3 / 0.27
Current consumption in rush	[A]	2.72	1.29	0.33	0.13	2.5 / 2.4	1.25 / 1.2
Power consumption hold		32.7 W	31 W	31.9 W	28.2 W	70 / 70 VA	70 / 70 VA
Power consumption in rush		32.7 W	31 W	31.9 W	28.2 W	280 / 290 VA	280 / 290 VA
Solenoid connection		Connector as per EN 175301-803, solenoid identification as per ISO 9461 (code W).					
Wiring min.	[mm²]	3 x 1.5 recommended					
Wiring length max.	[m]	50 recommended					

With electrical connections the protective conductor (PE ⏚) must be connected according to the relevant regulations.

D1VW UK.indd RH 17.04.2015

2

D	1	V	W		
Directional control valve	**Size DIN NG06 CETOP 03 NFPA D03**	**3-chamber valve**	**Wet pin armature solenoid, threaded in tube**	**Spool type**	**Spool position**

3 position spools			
Code	Spool position		
C	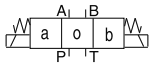		**3 positions. Spring offset in position “0“. Operated in position “a“ or “b“.**
	Standard	Spool type 008,009, 204, 205	
E	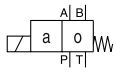 **Operated in position “a“.**	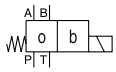 **Operated in position “b“.**	**2 positions. Spring offset in position “0“.**
F	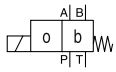 Spring offset in position “b“.	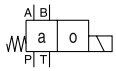 Spring offset in position “a“.	2 positions. Operated in position “0“.
K	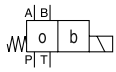 **Operated in position “b“.**	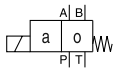 **Operated in position “a“.**	**2 positions. Spring offset in position “0“.**
M	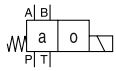 Spring offset in position “a“.	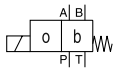 Spring offset in position “b“.	2 positions. Operated in position “0“.

2 position spools			
Code	Spool position		
	Standard	Spool type 083	
B	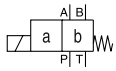	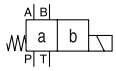	**2 positions. Spring offset in position “b“. Operated in position “a“.**
D	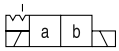		**2 positions. Operated in position “a“ or “b“. No center or offset position.**
H	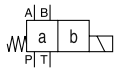	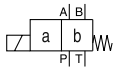	**2 positions. Spring offset in position “a“. Operated in position “b“.**

3 position spools	
Code	Spool type a 0 b
001	
002	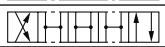
003	
004	
005	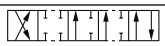
006	
007	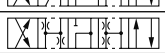
008 1)	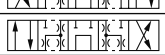
009 1)	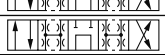
010	
011	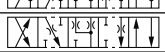
014	
015	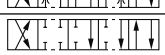
016	
021	
022	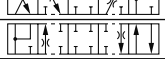
031	
032	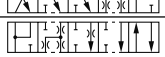
034	
035	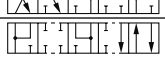
061	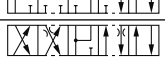
081	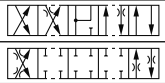
082	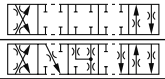
102	
204 1)	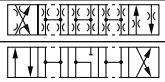
205 1)	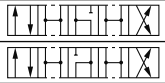

2 position spools	
Code	Spool type a b
020	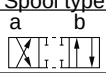
026	
030	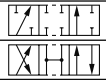
083 1)	
101	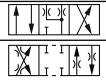
208	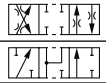

1) Consider specific spool position.

2) To be used in combination with rectifier plugs at 120 VAC / 230 VAC power supply.

3) DC only

Ordering Code

Series D1VW

		W		
Seals	**Solenoid voltage**	**Solenoid connector as per EN 175301-803, without plug** (other connectors are available for D1MW Series)	**Solenoid option**	**Design series** (not required for ordering)

Code	Solenoid option
omit	**manual override (standard)**
T	without manual override
S2 [3)]	Soft shift orifice size 0.5 mm.
S3 [3)]	Soft shift orifice size 0.75 mm.
4N [3)]	with lockable manual override

Code	Voltage
K	**12 V =**
J	**24 V =**
U [2)]	98 V =
G [2)]	205 V =
Y	110 V 50 Hz / 120 V 60 Hz
T	230 V 50 Hz / 240 V 60 Hz

Code	Seals
N	**NBR**
V	FPM

Bold letters =
Short-term availability

Further spool types, solenoid voltages and connectors on request.

D1VW UK.indd RH 17.04.2015

2

Flow curve

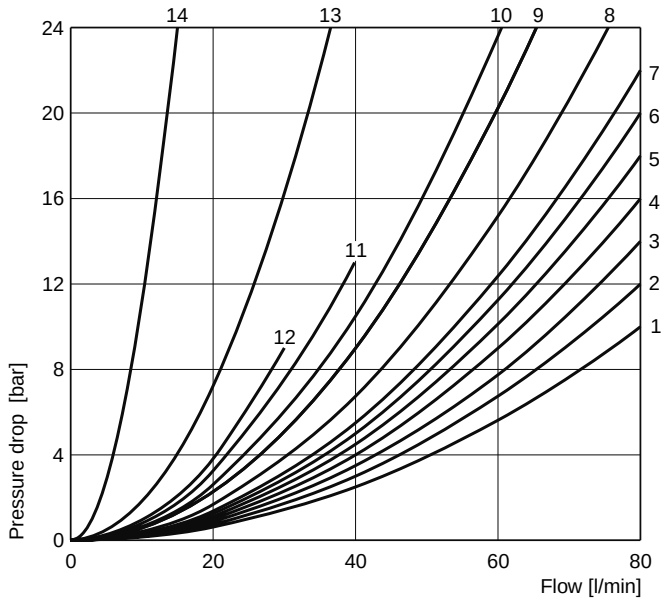

All characteristic curves measured with HLP46 at 50 °C.

	Position "b"			Position "a"			Position "0"				
Spool	P-A	B-T	P-B	P-B	A-T	P-A	P-A	P-B	A-T	B-T	P-T
001	2	2		2	2						
002	1	4		1	4		1	1	5	5	2
003	3	4		3	6				7		
004	2	3		2	3				7	7	
005	2	2		2	2		12				
006	1	4		1	4		7	7			
007	3	2		2	2			3		2	7
010	3			3							
011	2	2		2	2				14	14	
014	3	2		2	2		3		2		7
015	3	6		3	4					7	
016	2	2		2	2			12			
020B	4	4		2	3						
026B	4			4							
030B	2	3		1	2						
034	4		8	3	3				5	7	
035	3	3		4		8			7	5	
081	13	13		13	13						
082	13	13		13	13				[1]	[1]	
101B	11	10		10	9						
102	1	4		1	4		5	5	8	8	6
61	1	3		1	3		3	2			
83H	5	2		5	2						
208	3			2							
	P-B	A-T		P-A	B-T		P-A	P-B	A-T	B-T	P-T
008	4	5		4	5						9
009	5	5		6	7						7
83B	5	2		5	2						
204	1	3		4	3		7		4		7
205	4	3		1	3			7		4	5

	Position "b"			Position "a"		
Spool	P-A	P-B	A-B	P-B	A-T	
021	2	4		4	2	
	P-A	B-T		P-A	P-B	A-B
022	6	2		5	2	

[1] Only for pressure compensation, no high flow possible.

The diagram below specifies the shift limits for valves with DC & AC solenoids. Valves with spool position “F” or “M” can only be operated up to 70 % of the limits. The specifications apply to a viscosity of 40 mm²/s and balanced flow conditions. The shift limits can be considerably lower at unbalanced flow conditions. To avoid flow rates beyond the shift limits, a plug-in orifice can be inserted in the P-port.

Valve with standard DC solenoid

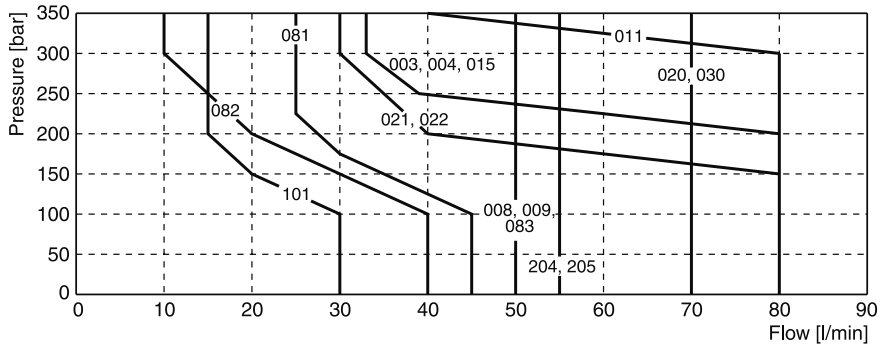

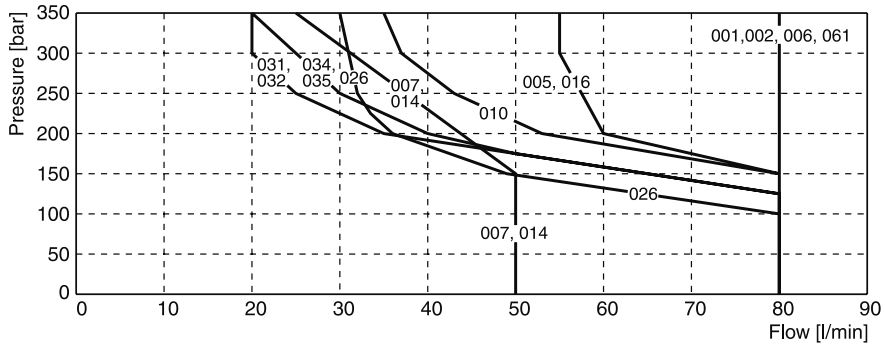

Measured with HLP46 at 50 °C, 90 % U_{nom} and warm solenoids

Valve with standard AC solenoid

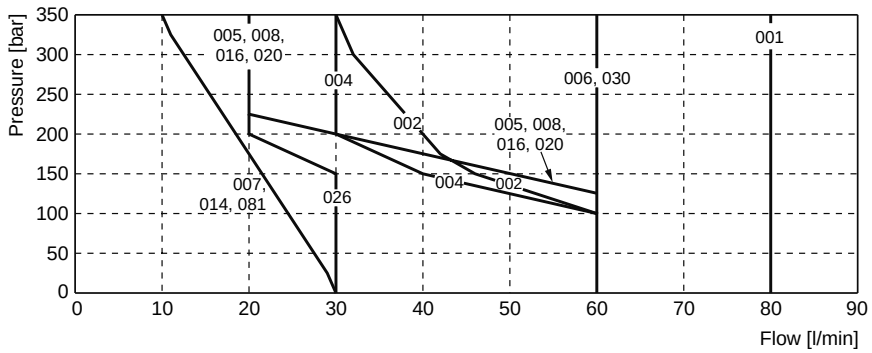

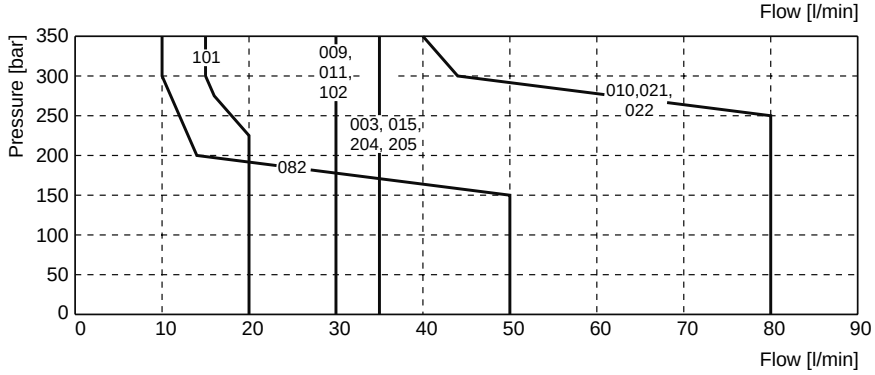

Measured with HLP46 at 50 °C, 95 % U_{nom} and warm solenoids

2

Shift limit diagram - Soft shift with 1 DC solenoid

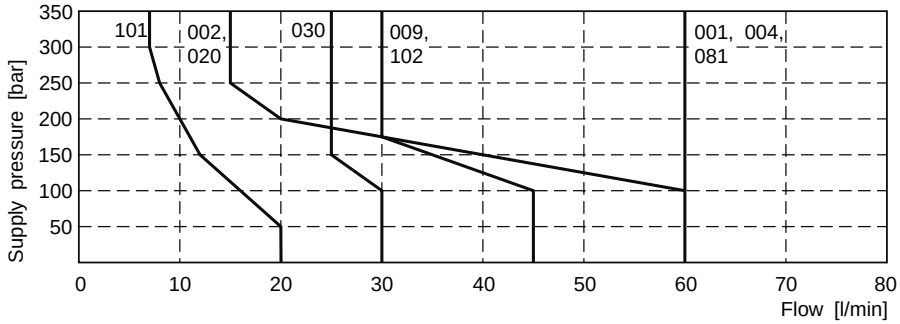

Shift limit diagram - Soft shift with 2 DC solenoids

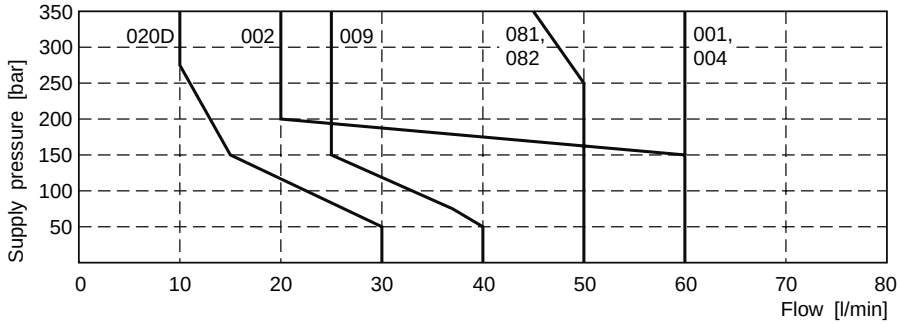

Measured with HLP46 at 50 °C, 90 % U_{nom} and warm solenoids.

Response times D1VW Standard and Soft Shift [ms]

Standard solenoid	Orifice	Energize	De-energize
Standard DC	w/o	45 - 60	20 - 30
Standard AC	w/o	13	20
Standard DC with rectifier plug	w/o	60 -70	70- 90

Response times soft shift		2 solenoid valve		2 solenoid valve		1 solenoid valve	
		3 positions		3 positions		2 positions	
Code	Orifice size	Center position: Closed		Center position: Open			
		Energize	De-energize	Energize	De-energize	Energize	De-energize
S2	0.50 mm	200 - 750	310 - 650	220 - 400	350 - 750	90 - 350	160 - 500
S3	0.75 mm	180 - 300	300 - 400	200 - 350	300 - 500	90 - 350	130 - 350

The lower value applies to small flow rates and low pressure, the upper value to high flow rates and high pressure.

Step response times were obtained under the following conditions: HLP46 at 50 °C with the valve operating at nominal pressure and flow. Published response times are nominal and may vary with spool, flow, pressure and temperature.

Acceleration for orifice size 0.75, code “S3” (measured against a standard valve)

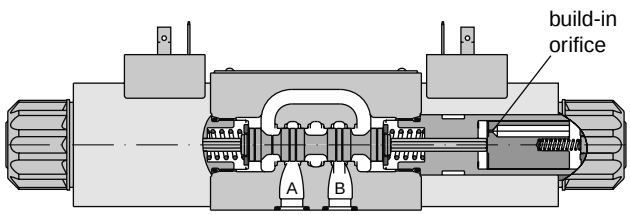

For even softer shifting, the proportional spools 081, 082, 101 and 102 can be used.

Interface EN 175301-803, DC solenoid
B, E, F -style

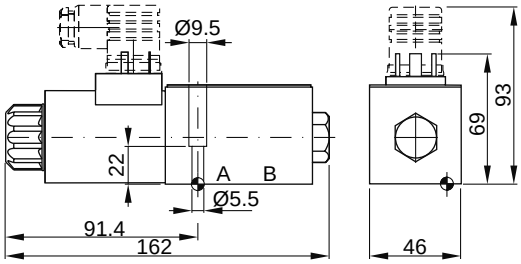

H, K, M -style

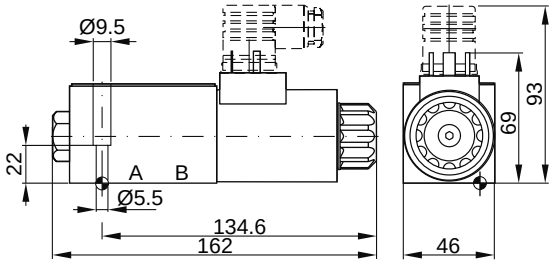

C, D -style

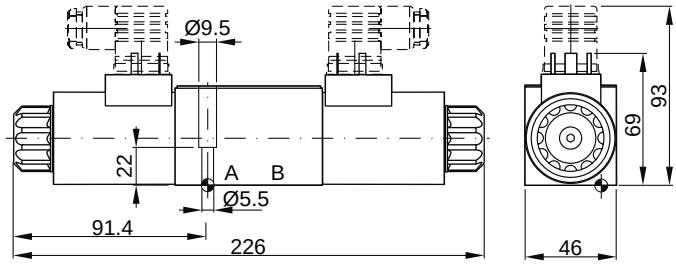

Option 4N, with lockable manual override (available for all styles, DC only)

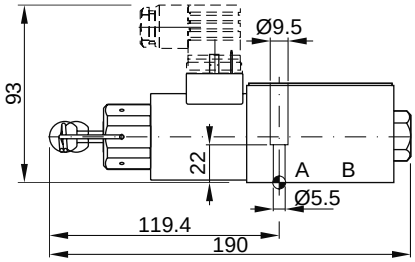

Interface EN 175301-803, AC solenoid
B, E, F -style

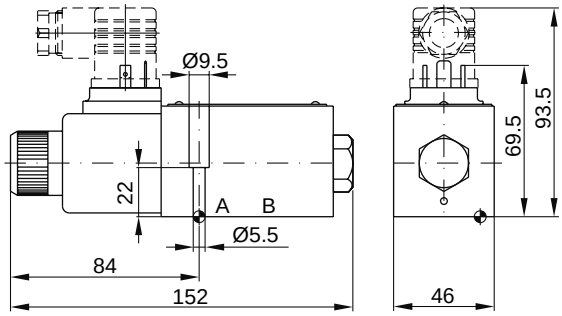

H, K, M -style

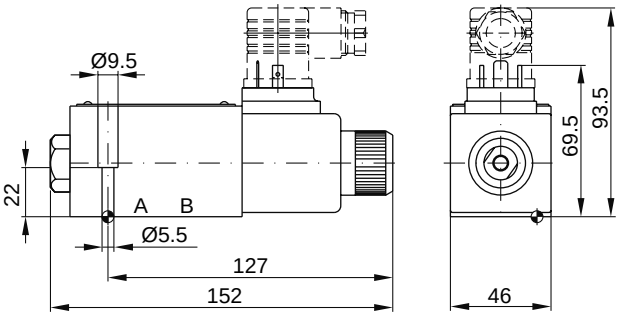

C, D -style

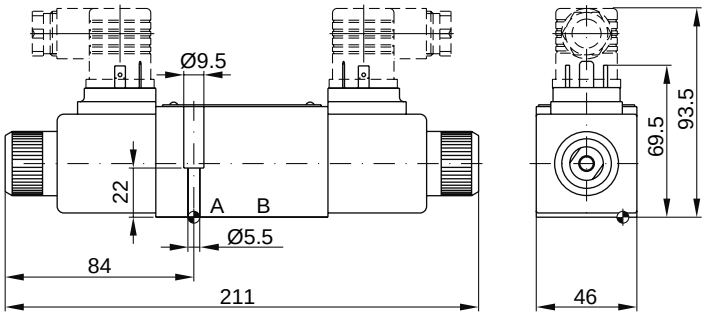

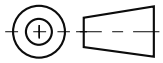

Surface finish	Kit			Kit
R_{max}6.3 ⏥ 0.01/100	BK375	4x M5x30 ISO 4762-12.9	7.6 Nm ±15 %	NBR: SK-D1VW-N-91 FPM: SK-D1VW-V-91

The space necessary to remove the plug per EN 175301-803, design type AF is at least 15 mm.
The torque for the screw M3 of the plug has to be 0.5 to 0.6 Nm.

D1VW UK.indd RH 17.04.2015

Notes

The D1VW 8 Watt series is based on the standard D1VW design. The low watt, low current (<0.5 A) solenoid allows direct connection to a PLC or a bus knot. The valves are offered with standard solenoid connection (as per EN175301-803) and M12 x 1 connection. The version with M12 x 1 connection and LEDs is conform to the DESINA standard (**D**istribut**E**d and **S**tandardised **IN**st**A**llation technology) for machine tools and manufacturing systems.

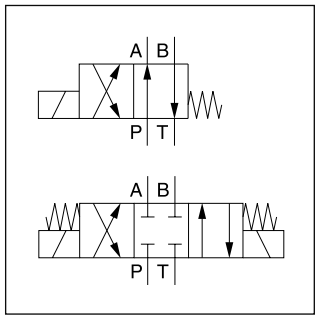

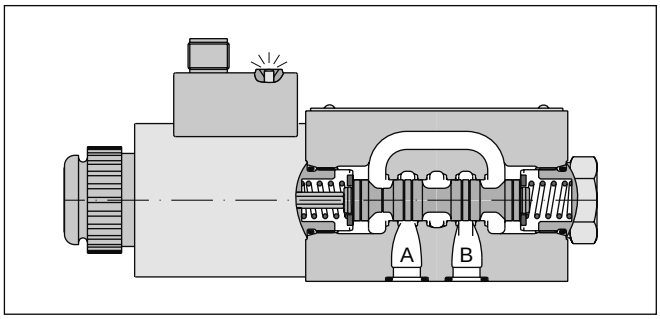

Technical data

General		
Design		Directional spool valve
Actuation		Solenoid
Size		DIN NG06 / CETOP 03 / NFPA D03
Mounting interface		DIN 24340 A6 / ISO 4401 / CETOP RP 121-H / NFPA D03
Mounting position		unrestricted, preferably horizontal
Ambient temperature	[°C]	-25...+60
$MTTF_D$ value	[years]	150
Weight	[kg]	1.5 (1 solenoid), 2.1 (2 solenoids)
Vibration resistance	[g]	10 Sinus 5...2000 Hz acc. IEC 68-2-6 30 Random noise 20...2000 Hz acc. IEC 68-2-36 15 Shock acc. IEC 68-2-27
Hydraulic		
Max. operating pressure	[bar]	P, A B: 350, T: 210
Fluid		Hydraulic oil according to DIN 51524
Fluid temperature	[°C]	-20 ... +70 (NBR: -25...+70)
Viscosity permitted	[cSt] / [mm²/s]	2.8...400
Viscosity recommended	[cSt] / [mm²/s]	30...80
Filtration		ISO 4406 (1999); 18/16/13
Flow max.	[l/min]	60 (see shift limits)
Leakage at 50 bar	[ml/min]	Up to 10 per flow path, depending on spool
Static / Dynamic		
Step response at 95 %	[ms]	Energized: 80...120; De-energized: 35...55
Electrical characteristics		
Duty ratio		100 % ED; CAUTION: coil temperature up to 70 °C possible
Max. switching frequency	[1/h]	10000
Protection class		IP65 in acc. with EN 60529, M12x1 IP67 (each with correctly mounted plug-in connector)
	Code	J
Supply voltage	[V]	24 V =
Tolerance supply voltage	[%]	±10
Current consumption	[A]	0.33
Power consumption	[W]	8
Solenoid connection		Connector as per EN 175301-803, solenoid identification as per ISO 9461 (code W). Plug M12x1 on coil as per IEC 61076-2-101 (code D).
Wiring min.	[mm²]	3 x 1.5 recommended
Wiring length max.	[m]	50 recommended

With electrical connections the protective conductor (PE ⏚) must be connected according to the relevant regulations.

D1VW-8W UK.indd RH 17.04.2015

2

D	1	V	W		
Directional control valve	**Size DIN NG06 CETOP 03 NFPA D03**	**3-chamber valve**	**Wet pin solenoid**	**Spool type**	**Spool position**

3 position spools	
Code	Spool type
	a 0 b
001	
002	
003	
004	
005	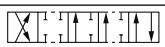
006	
007	
008 [1]	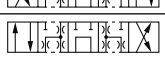
009 [1]	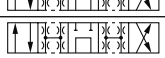
010	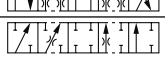
011	
014	
015	
016	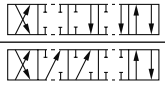
081	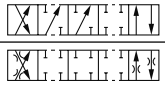
082	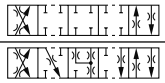
102	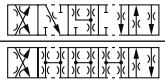

2 position spools	
Code	Spool type
	a b
020	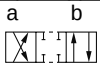
026	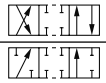
030	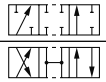
101	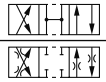

3 position spools			
Code	Spool position		
C	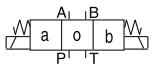		**3 positions. Spring offset in position “0“. Operated in position “a“ or “b“.**
	Standard	Spool type 008, 009	
E	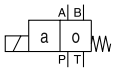 Operated in position “a“.	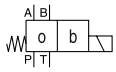 Operated in position “b“.	2 positions. Spring offset in position “0“.
K	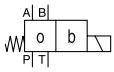 Operated in position “b“.	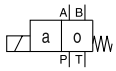 Operated in position “a“.	2 positions. Spring offset in position “0“.

2 position spools		
Code	Spool position	
B	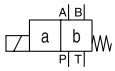	**2 positions. Spring offset in position “b“. Operated in position “a“.**
D [2]	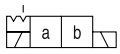	**2 positions. Operated in position “a“ or “b“. No center or offset position.**
H	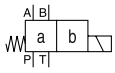	**2 positions. Spring offset in position “a“. Operated in position “b“.**

[1] Consider specific spool position.
[2] Only for spool 020 available.
[3] Please order plug separately.

	J		L			
Seals	**Solenoid voltage 24 V=**	**Connection**	**8 watt Solenoid**	**Electrical option**	**Acces-sories**	**Design series** (not required for ordering)

Code	Accessories
omit	**Standard valve (in combination with solenoid connection "D" and "W")**
5	Only in combination with solenoid connection "D" and surge diode with LED "J"

Solenoid identification acc. to ISO 9461

Code	Electrical option
omit	**Standard valve (in combination with solenoid connection "D" and "W")**
J	Surge diode with LED, max. voltage peak 50 V (only available in combination with solenoid connection "D")

Code	Connection
D [3)]	M12x1 on coil as per IEC 61076-2-101
W [3)]	**Connector as per EN 175301-803, without plug**

Code	Seals
N	**NBR**
V	FPM

Bold letters =
Short-term availability

Further spool types on request.

To get a DESINA valve, order the combination: JDLJ5.

D1VW-8W UK.indd RH 17.04.2015

2

The flow curve diagram shows the flow versus pressure drop curves for all spool types. The relevant curve number for each spool type, operating position and flow direction is given in the table below.

	Position „b“		Position „a“		Position „0“				
Spool	P ->A	B->T	P->B	A->T	P->A	P->B	A->T	B->T	P->T
001	3	3	3	3	–	–	–	–	–
002	3	4	3	4	1	1	3	3	1
003	4	4	4	5	–	–	4	–	–
004	3	4	3	4	–	–	4	4	–
005	3	3	3	3	8 (max. 30l)	–	–	–	–
006	3	4	3	4	4	4	–	–	–
007	4	3	3	3	–	2	–	1	4
010	4	–	4	–	–	–	–	–	–
011	3	3	3	3	–	–	11 (max. 25l)	11 (max. 25l)	–
014	4	3	3	3	2	–	1	–	4
015	4	5	4	4	–	–	–	4	–
016	3	3	3	3	–	8 (max. 30l)	–	–	–
020B	4	4	3	4	–	–	–	–	–
026B	4	–	4	–	–	–	–	–	–
030B	3	4	4	3	–	–	–	–	–
081	9	10	9	10	–	–	–	–	–
082	9	10	9	10	–	–	–	–	–
101B	4 (max. 40l)	7	7	6	–	–	–	–	–
102	3	4	3	4	3	3	5	5	3
	P->B	A->T	P->A	B->T	P->A	P->B	A->T	B->T	P->T
008	4	5	4	5	–	–	–	–	6
009	5	5	5	5	–	–	–	–	4

Flow curve diagram

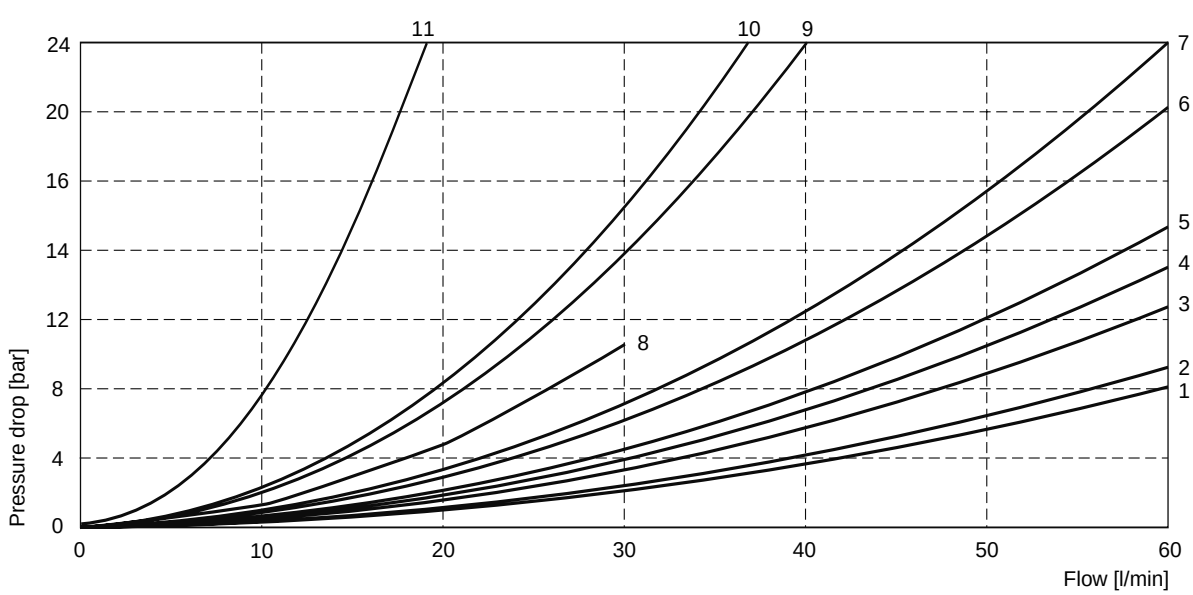

All characteristic curves measured with HLP46 at 50 °C.

D1VW-8W UK.indd RH 17.04.2015

The diagram below specifies the shift limits. The specifications apply to a viscosity of 40 mm²/s and balanced flow conditions. The shift limits can be considerably lower at unbalanced flow conditions. To avoid flow rates beyond the shift limits, a plug-in orifice can be inserted in the P-port.

Shift limits

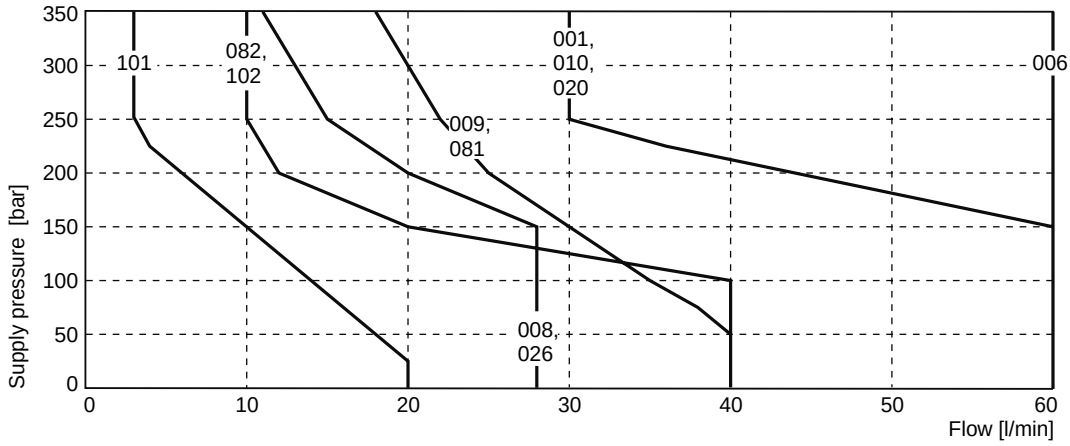

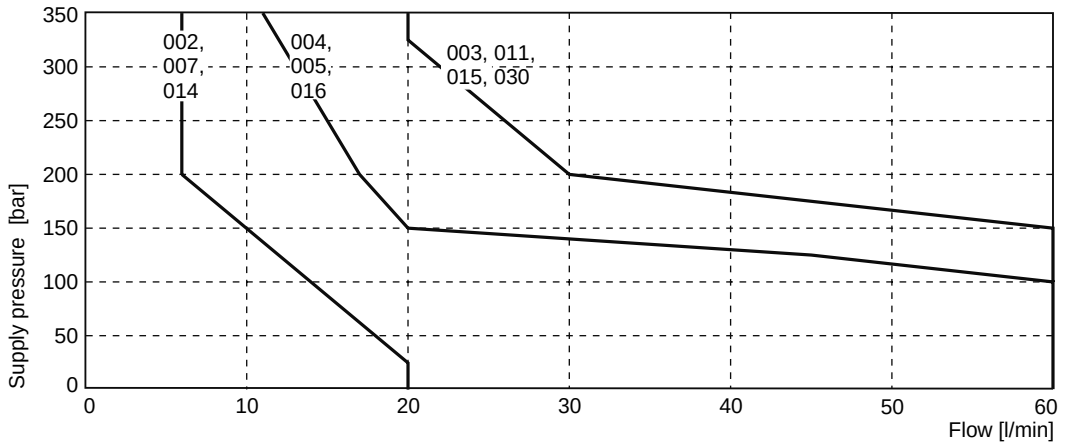

Measured with HLP46 at 50 °C, 90 % U_{nom} and warm solenoids.

M12 pin assignment DESINA design (code „JDLJ5“), Pins 1 and 2 connected

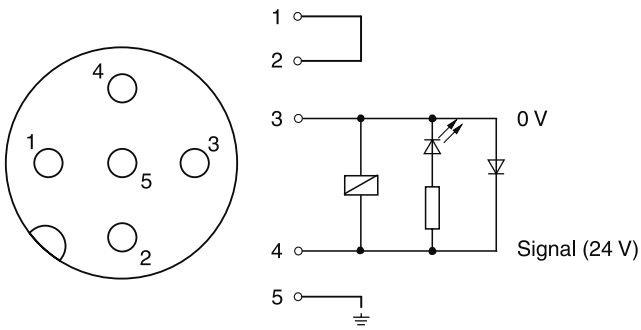

M12 pin assignment code “JDL“, Pins 1 and 2 not connected

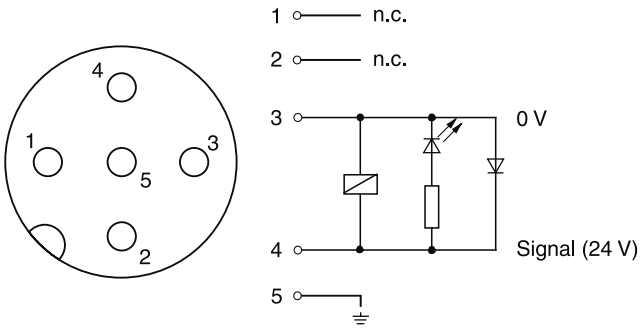

2

Interface EN 175301-803, DC solenoid, JWL

Style B, E

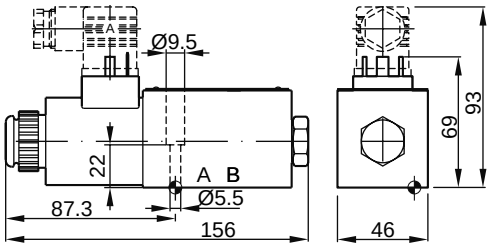

Style H, K

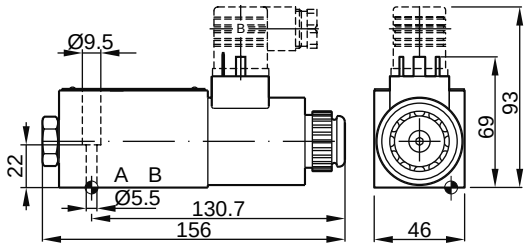

Style C, D

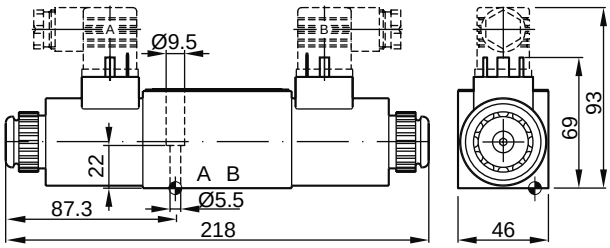

M12x1 connector, DC solenoid, JDLJ5 (DESINA) or JDL

Style B, E

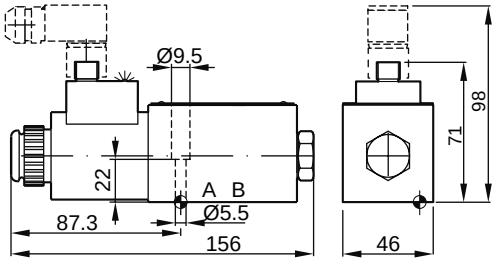

Style H, K

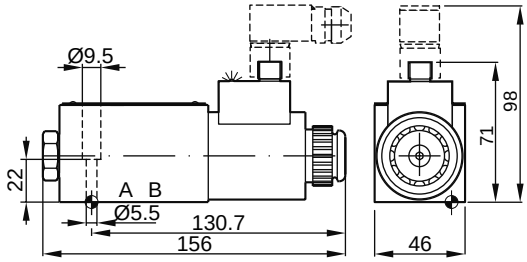

Style C, D

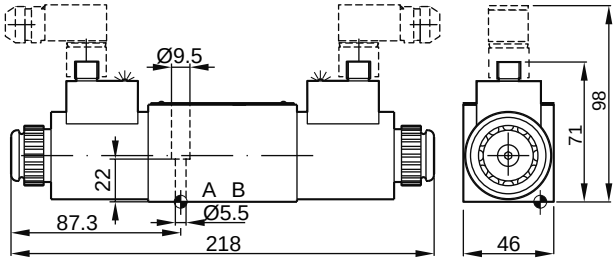

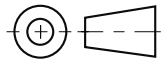

Surface finish	Kit			Kit
R_{max}6.3 ▱ 0.01/100	BK375	4x M5x30 ISO 4762-12.9	7.6 Nm ±15 %	**NBR: SK-D1VW-N-91** FPM: SK-D1VW-V-91

The space necessary to remove the plug per EN 175301-803, design type AF is at least 15 mm.
The torque for the screw M3 of the plug has to be 0.5 to 0.6 Nm.

D1VW-8W UK.indd RH 17.04.2015

The direct operated directional valves series D1VW with inductive position control are typically used in safety relevant applications. The start or end position can be monitored. The position control is available for single and double solenoid valves.

The fail-safe position of the directional valve during power failure is the spring offset or center position.

Please find detailed information on the machine directive in the position paper in chapter 1.

Attention:

The adjustment of the position control is factory set and sealed. Replacement and repairs can only be undertaken by the manufacturer.

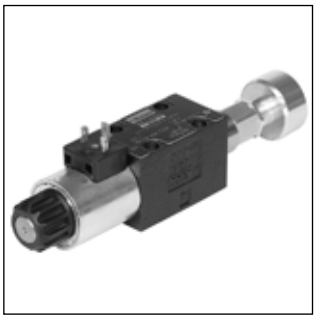

D1VW*B

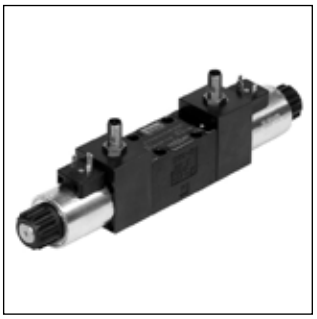

D1VW*C

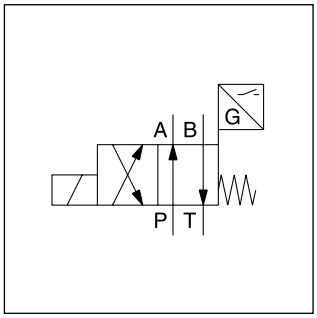

D1VW*B

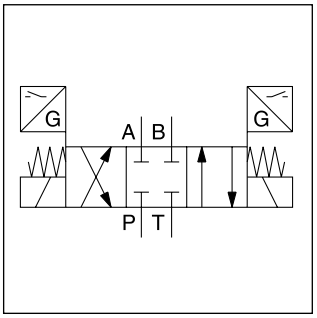

D1VW*C

D1VW*B

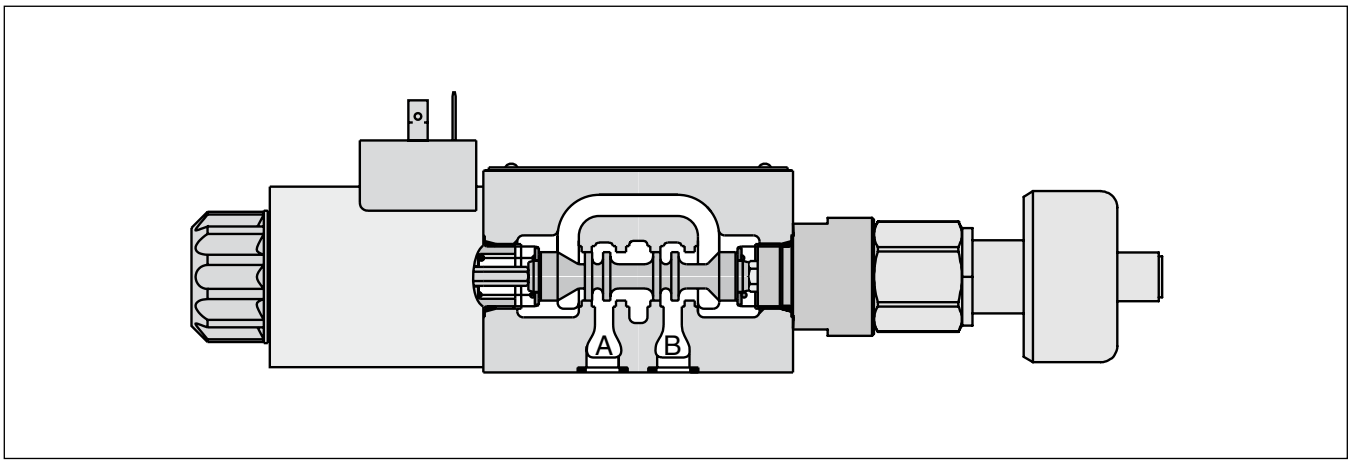

D1VW*C

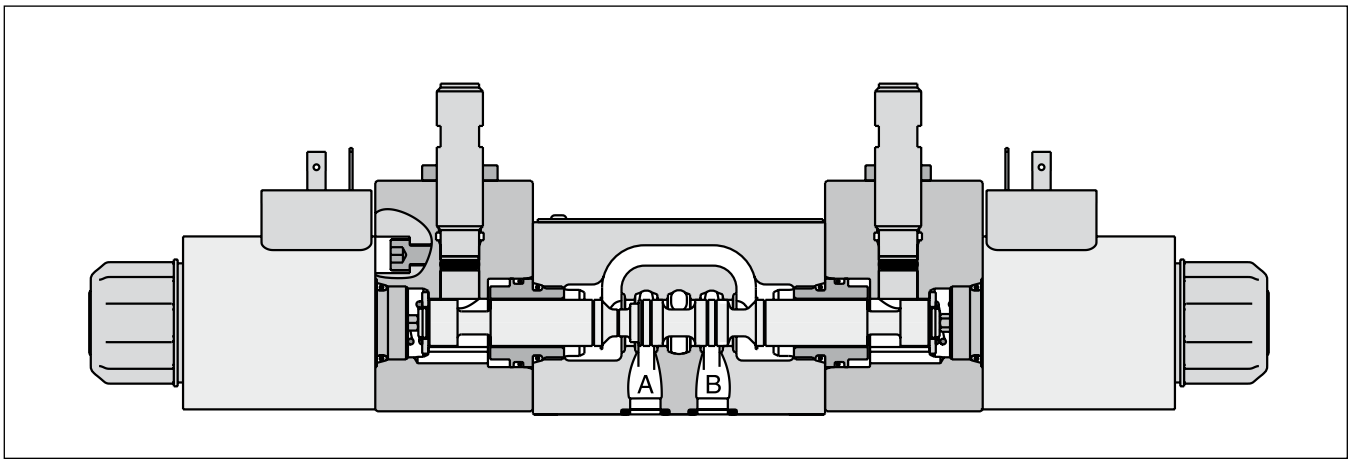

2

D	1	V	W		
Directional control valve	**Size DIN NG06 CETOP 03 NFPA D03**	**3-chamber valve**	**Wet pin solenoid**	**Spool type**	**Spool position**

3 position spools	
Code	Spool type
	a 0 b
001	
002	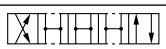
003[1]	
004	
005	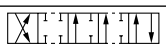
015[2]	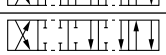
016	
076	
078	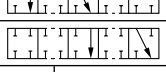

2 position spools	
Code	Spool type
	a b
020	
026[3]	
030[3]	

3 position spools		
Code	Spool position	
E	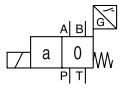 Operated in position “a“.	**2 positions. Spring offset in position “0“.**
F	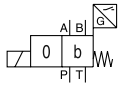 Spring offset in position “b“.	2 positions. Operated in position “0“.
K	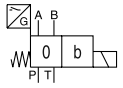 Operated in position “b“.	**2 positions. Spring offset in position “0“.**
M	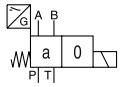 Spring offset in position “a“.	2 positions. Operated in position “0“.

2 position spools		
Code	Spool position	
B	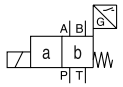	**2 positions. Spring offset in position “b“. Operated in position “a“.**
H	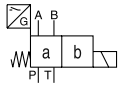	**2 positions. Spring offset in position “a“. Operated in position “b“.**

[1] Only available for spool position “E“ and “F“.

[2] Only available for spool position “K“ and “M“.

[3] Only available for spool position “B“ and “H“.

[4] To be used in combination with rectifier plugs at 120 VAC / 230 VAC power supply.

[5] Please order female connector M12x1 separately (see accessories, female connector M12x1 (order no.: 5004109).

[6] For hydraulic presses according to the safety regulations EN 693, solenoid option “T” (without manual override) and accessory “I4N” or “I5N” (start position monitored) are required.

Ordering Code Single Solenoid Valve

Series D1VW Inductive Position Control

		W			
Seals	**Solenoid voltage**	**Connector as per EN 175301-803, without plug** (please order plug separately)	**Manual override option**	**Position control** [5]	**Design series** (not required for ordering)

Code	Position control	Spool position
I2N	End position monitored side B	E, F, B (Solenoid on a-side)
I5N[6]	**Start position monitored side B**	
I1N	End position monitored side A	K, M, H (Solenoid on b-side)
I4N[6]	**Start position monitored side A**	

Code	Manual override
omit	**manual override (Standard)**
T[6]	without manual override

Code	Voltage
K	12 V=
J	**24 V=**
U[4]	98 V=
G[4]	205 V=

Code	Seals
N	**NBR**
V	FPM

Bold letters =
Short-term availability

Further spool types and voltages on request.

D1VW-IPC UK.indd RH 09.09.2015

Ordering Code Double Solenoid Valve

Series D1VW Inductive Position Control

D	1	V	W					W			
Directional control valve	**Size DIN NG06 CETOP 03 NFPA D03**	**3-chamber valve**	**Wet pin solenoid**	**Spool type**	**Spool position**	**Seals**	**Solenoid voltage**	**Connector as per EN 175301-803, without plug** (please order plug separately)	**Manual override option**	**Position control 5)**	**Design series** (not required for ordering)

3 position spools	
Code	Spool type
	a 0 b
001	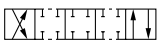
002	
003 1)	
004	
015 1)	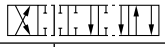

2 position spools	
Code	Spool type
	a b
020	

3 position spools		
Code	Spool position	
C	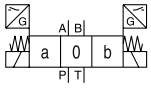	3 positions. Spring offset in position “0“. Operated in position “a“ or “b“.

2 position spools		
Code	Spool position	
D 2)	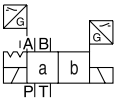	2 positions. Operated in position “a“ or “b“. No center or offset position.

Code	Position control	Spool position
I3N	End positions	C, D
I6N 4)	Start positions	C

Code	Manual override
omit	manual override (Standard)
T4)	without manual override

Code	Voltage
K	12 V=
J	24 V=
U3)	98 V=
G3)	205 V=

Code	Seals
N	NBR
V	FPM

Further spool types and voltages on request.

1) Only for position control code “I6N“.
2) Only for position control code “I3N“.
3) To be used in combination with rectifier plugs at 120 VAC / 230 VAC power supply.
4) For hydraulic presses according to the safety regulations EN 693, solenoid option “T” (without manual override) and accessory “I6N” (start positions) is required.
5) Please order plug M12 x 1 separately. Straight plug recommended – no defined position possible for angled plug.

General					
Design		Directional spool valve			
Actuation		Solenoid			
Size		DIN NG06 / CETOP 03 / NFPA D03			
Mounting interface		DIN 24340 A6 / ISO 4401 / CETOP RP 121-H / NFPA D03			
Mounting position		unrestricted, preferably horizontal			
Ambient temperature	[°C]	-20...+60			
$MTTF_D$ value	[years]	150			
Weight	[kg]	1.8 (1 solenoid) / 3.8 (2 solenoids)			
Hydraulic					
Max. operating pressure	[bar]	P, A B: 350 ; T: 210			
Fluid		Hydraulic oil according to DIN 51524			
Fluid temperature	[°C]	-20 ... +70			
Viscosity permitted	[cSt] / [mm²/s]	2.8...400			
Viscosity recommended	[cSt] / [mm²/s]	30...80			
Filtration		ISO 4406 (1999); 18/16/13			
Flow max.	[l/min]	80 (see shift limits)			
Leakage at 50 bar	[ml/min]	Up to 10 per flow path, depending on spool			
Static / Dynamic					
Step response at 95 %	[ms]	Energized: 32 ; De-energized: 40			
Electrical characteristics					
Duty ratio		100 % ED; CAUTION: coil temperature up to 150 °C possible			
Max. switching frequency	[1/h]	15000			
Protection class		IP65 in accordance with EN 60529 (with correctly mounted plug-in connector)			
	Code	K	J	U	G
Supply voltage	[V]	12 V =	24 V =	98 V =	205 V =
Tolerance supply voltage	[%]	±10	±10	±10	±10
Current consumption	[A]	2.72	1.29	0.33	0.13
Power consumption	[W]	32.7	31	31.9	28.2
Solenoid connection		Connector as per EN 175301-803, solenoid identification as per ISO 9461.			
Wiring min.	[mm²]	3 x 1.5 recommended			
Wiring length max.	[m]	50 recommended			

With electrical connections the protective conductor (PE ⏚) must be connected according to the relevant regulations.

2

Single solenoid valves

Electrical characteristics of position control as per IEC 61076-2-101 (M12x1)

Supply voltage	[VDC]	24
Tolernace supply voltage	[%]	±20
Ripple supply voltage	[%]	≤10
Polarity protection	[V]	300
Current consumption without load	[mA]	≤20
Switching hysteresis	[mm]	<0.06
Max. output current per channel, ohmic	[mA]	250
Ambient temperature	[°C]	-20 … +60
Protection		IP65 acc. EN 60529 (with correctly mounted plug-in connector)
Min. distance to next AC solenoid	[m]	0.1
Interface		M12x1 to IEC 61076-2-101
CE conform		EN 61000-4-2 / EN 61000-4-4 / EN 61000-4-6 [1)] / ENV 50140 / ENV 50204

[1)] Only guaranted with screened cable and female connector

M12 pin assignment

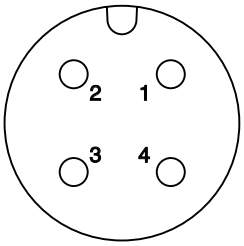

1 + U_S 19.2...28.8 V
2 Out B: normally open
3 0V
4 Out A: normally closed

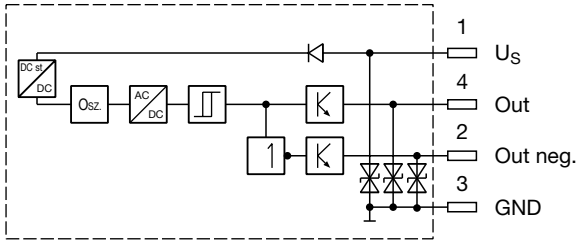

Outputs: Open collector

Definitions

Start position monitored:

The valve is de-energized. The inductive switch gives a signal at the moment when the spool leaves the spring offset position (below 15 % spool stroke).
At the switching point the spool is located within the closed position. It is secured that only the flow paths of the offset position are granted.

End position monitored:

The inductive switch gives a signal before the end position is reached (above 85 % spool stroke).

The switch can only be located on the opposite side of the solenoid for direct operated valves.
Please order plug M12x1 separately (see accessories, plug M12x1; order no.: 5004109).

Double solenoid valves

Electrical characteristics of position control as per IEC 61076-2-101 (M12x1)

Protection class		IP65 in accordance with EN 60529 (with correctly mounted plug-in connector)
Ambient temperature	[°C]	0...+50
Supply voltage Us / ripple	[V]	10...30 / ±10 %
Current consumption without load	[mA]	≤ 10
Max. output current per channel, ohmic	[mA]	200
Min. output load per channel, ohmic	[kOhm]	100
Max. output drop at 0.2 A	[V]	≤ 2
EMC		EN61000-6-4 / EN61000-6-2
Min. distance to next AC solenoid	[m]	>0.1
Interface		M12x1 acc. to IEC 61076-2-101
Wiring min.	[mm²]	3 x 0.14 brad shield recommended
Wiring length max.	[m]	50 recommended

M12 pin assignment

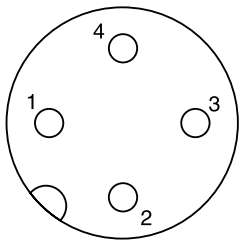

1 Us 10...30 V
2 not connected
3 0 V
4 Out A: normally open

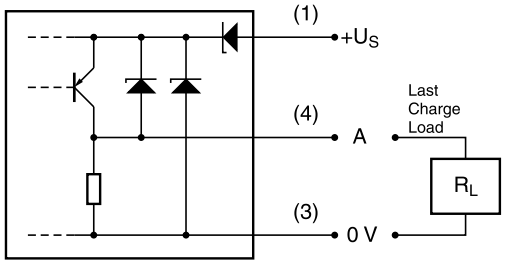

Definitions

Start position monitored:

The valve is de-energized. The inductive switch gives a signal at the moment when the spool leaves the center position (below 15 % spool stroke).
At the switching point the spool is located within the closed position. It is secured that only the flow paths of the offset position are granted.

End position monitored:

The inductive switch gives a signal before the end position is reached (above 85 % spool stroke).

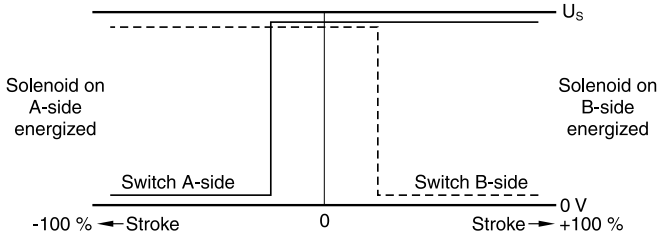

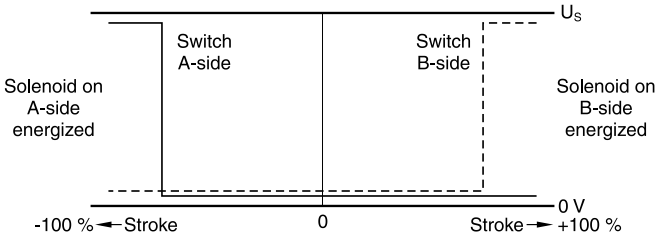

Please order plug M12 x 1 separately. Straight plug recommended – no defined position possible for angled plug.

2

The flow curve diagram shows the flow versus pressure drop curves for all spool types. The relevant curve number for each spool type, operating position and flow direction is given in the table below.

	Position „b“		Position „a“		Position „0“				
Spool	P->A	B->T	P->B	A->T	P->A	P->B	A->T	B->T	P->T
001	2	2	2	2	–	–	–	–	–
002	1	4	1	4	1	1	5	5	2
003	3	4	3	6	–	–	7	–	–
004	2	3	2	3	–	–	7	7	–
005	2	2	2	2	12	–	–	–	–
015	3	6	3	4	–	–	–	7	–
016	2	2	2	2	–	12	–	–	–
020 B	4	4	2	3	–	–	–	–	–
026 B	4	–	4	–	–	–	–	–	–
030 B	2	3	1	2	–	–	–	–	–

Flow curve diagram

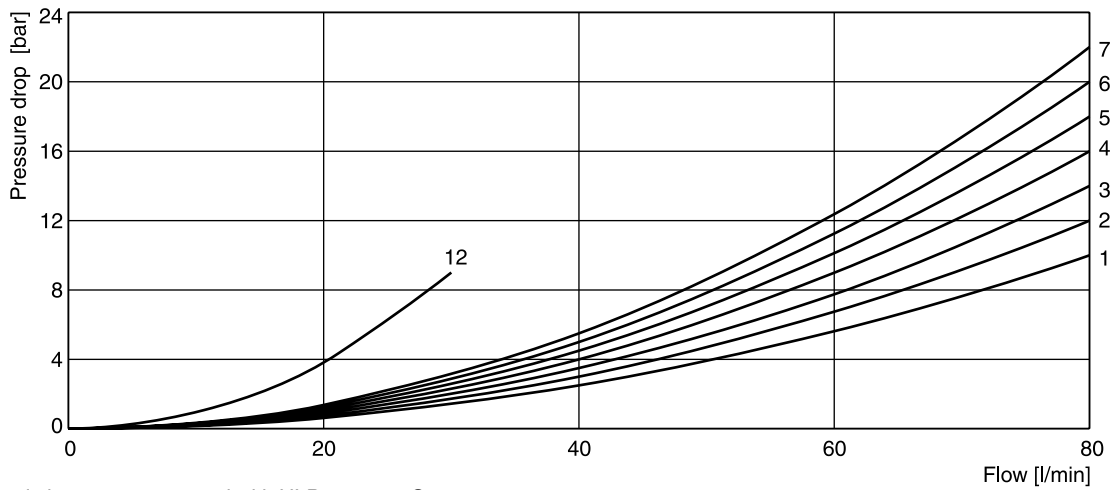

All characteristic curves measured with HLP46 at 50 °C.

Shift limit diagram

The diagram below specifies the shift limits. Valves with spool position “F” or “M” can only be operated up to 70 % of the limits. The specifications apply to a viscosity of 40 mm²/s and balanced flow conditions. The shift limits can be considerably lower at unbalanced flow conditions. To avoid flow rates beyond the shift limits, a plug-in orifice can be inserted in the P-port.

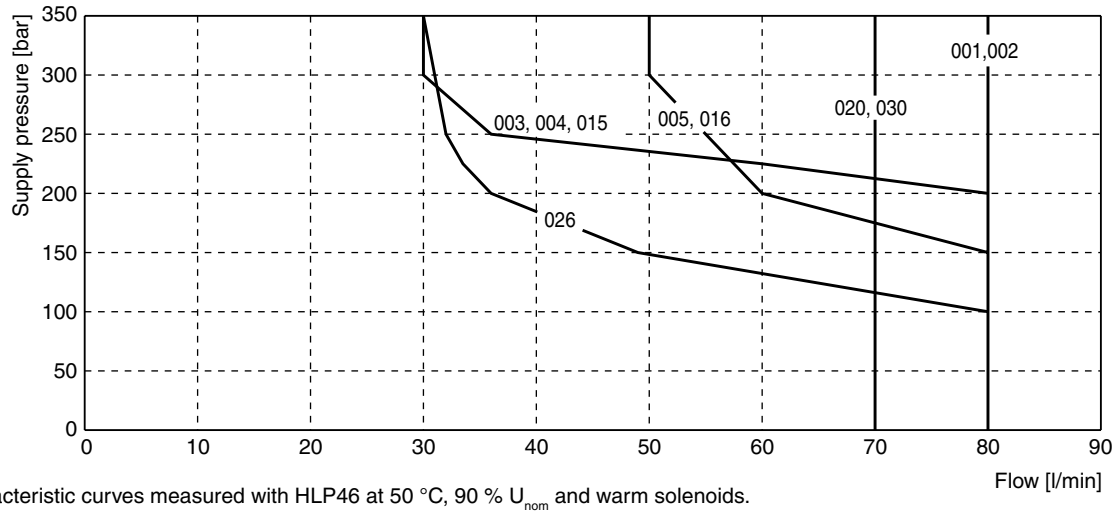

All characteristic curves measured with HLP46 at 50 °C, 90 % U_{nom} and warm solenoids.

Interface EN 175301-803, DC solenoid, without plug M12x1[1)]
B, E, F -style

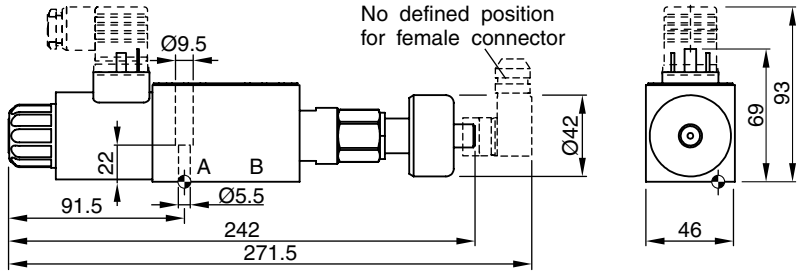

H, K, M -style

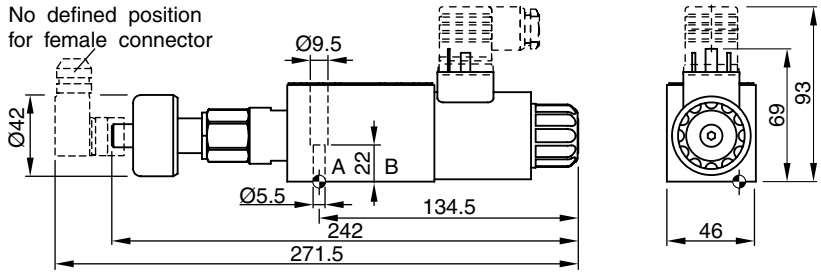

Interface EN 175301-803, DC solenoid, without plug M12x1[2)]
C, D -style

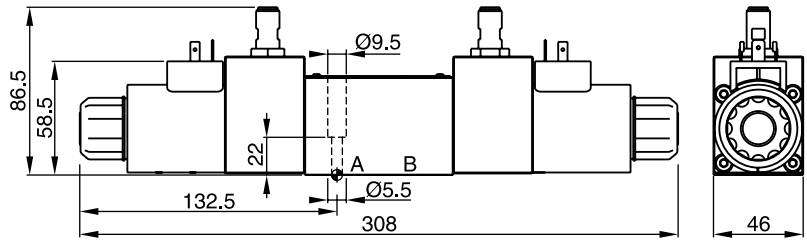

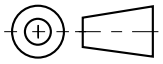

Surface finish	Kit			Kit
R_{max}6.3 ▱ 0.01/100	BK375	4x M5x30 ISO 4762-12.9	7.6 Nm ±15 %	**NBR: SK-D1VW-N-91** FPM: SK-D1VW-V-91

The space necessary to remove the plug per EN 175301-803, design type AF is at least 15 mm.
The torque for the screw M3 of the plug has to be 0.5 to 0.6 Nm.
The space necessary to remove the M12x1 female connector is at least 22 mm.

Attention:

The adjustment of the position control is factory set and sealed. Replacement and repairs can only be undertaken by the manufacturer.

[1)] Please order plug M12x1 separately (see accessories, plug M12x1; order no.: 5004109).

[2)] Please order plug M12x1 separately. Straight plug recommended – no defined position possible for angled plug.

2

The D1VW with explosion proof solenoids is based on the standard D1VW series. The specific solenoid design allows the usage in hazardous environments.

The explosion proof class is

CE Ex II 2 G
Ex e mb II T4 Gb

for use in zone 1 and 2 (according to ATEX). Additionally the solenoids are IECEx compliant.

All explosion proof solenoids are DC design. The valves for AC operate with integrated rectifier.

For further explosion proof valves please refer to catalogue HY11-3343.

Download: www.parker.com/euro_hcd - see “Literature”

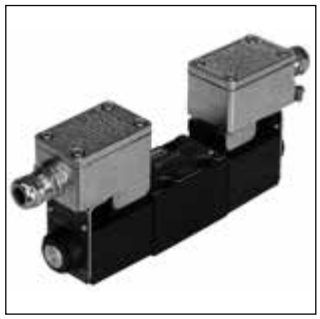

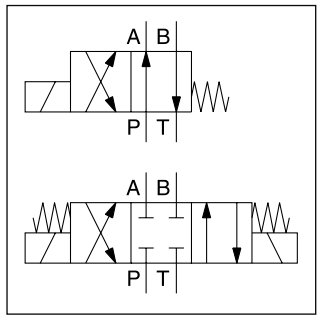

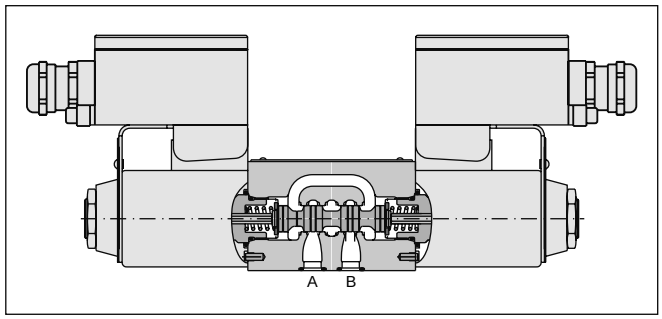

Technical data

General				
Design		Directional spool valve		
Actuation		Solenoid		
Size		DIN NG06 / CETOP 03 / NFPA D03		
Mounting interface		DIN 24340 A6 / ISO 4401 / CETOP RP 121-H / NFPA D03		
Mounting position		unrestricted, preferably horizontal		
Ambient temperature	[°C]	-20 ... +60		
$MTTF_D$	[years]	150		
Weight	[kg]	1.8 (1 solenoid), 2.7 (2 solenoids)		
Hydraulic				
Max. operating pressure	[bar]	P, A B: 350 T: 140		
Fluid		Hydraulic oil according to DIN 51524		
Fluid temperature	[°C]	-20 ... +60		
Viscosity permitted	[cSt] / [mm²/s]	2.8 ... 400		
Viscosity recommended	[cSt] / [mm²/s]	30 ... 80		
Filtration		ISO 4406 (1999); 18/16/13		
Flow max.	[l/min]	60 (see shift limits)		
Leakage at 50 bar	[ml/min]	Up to 10 per flow path, depending on spool		
Static / Dynamic				
Step response at 95 %	[ms]	Energized: 32 (DC), 40 (AC) De-energized: 40 (DC), 75 (AC)		
Electrical characteristics				
Duty ratio		100 % ED; CAUTION: coil temperature up to 135 °C possible		
Max. switching frequency	[1/h]	15000 (DC), 7200 (AC)		
Protection class		CE Ex II 2 G , Ex e mb II T4 Gb, IP66 (plugged and mounted correctly)		
	Code	J	N	P
Supply voltage / ripple	[V]	24 V =	230/50 Hz	110/50 Hz
Tolerance supply voltage	[%]	±10	±10	±10
Current consumption	[A]	1.0	0.12	0.25
Power consumption	[W]	24	24	24
Solenoid connection		Box with M20x1.5 entry for cable glands. Solenoid identification as per ISO 9461.		
Wiring min.	[mm²]	3 x 1.5 recommended		
Wiring length max.	[m]	50 recommended		

With electrical connections the protective conductor (PE ⏚) must be connected according to the relevant regulations.

D1VW EX UK.indd RH 17.04.2015

D	1	V	W					E	E	
Directional control valve	**Size DIN NG06 CETOP 03 NFPA D03**	**3-chamber valve**	**Wet pin solenoid**	**Spool type**	**Spool position**	**Seals**	**Solenoid voltage**	**Connection: Explosion proof with cable glands**	**Solenoid options: Explosion proof Ex e mb II and IECEx conformity**	**Design series** (not required for ordering)

2

3 position spools	
Code	Spool type
	a 0 b
001	
002	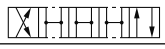
003	
004	
005	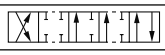
006	
007	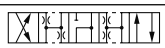
008 [1]	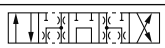
009 [1]	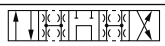
010	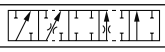
011	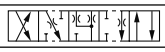
014	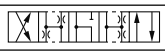
015	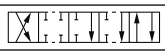
016	
021	
022	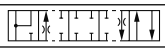
081	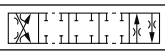
082	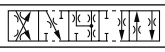
102	

2 position spools	
Code	Spool type
	a b
020	
026	
030	
101	

Code	Voltage
J	24 V=
P	110 V 50 Hz
N	230 V 50 Hz

Code	Seals
N	NBR
V	FPM

3 position spools			
Code	Spool position		
C	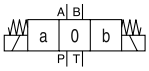		3 positions. Spring offset in position “0“. Operated in position “a“ or “b“.
	Standard	Spool type 008, 009	
E	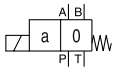 Operated in position “a“.	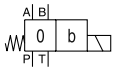 Operated in position “b“.	2 positions. Spring offset in position “0“.
K	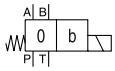 Operated in position “b“.	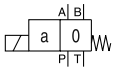 Operated in position “a“.	2 positions. Spring offset in position “0“.

2 position spools		
Code	Spool position	
B	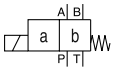	2 positions. Spring offset in position “b“. Operated in position “a“.
D	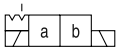	2 positions. Operated in position “a“ or “b“. No center or offset position.
H	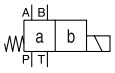	2 positions. Spring offset in position “a“. Operated in position “b“.

Further spool types, styles, and combinations on request.

[1] Consider specific spool position.

D1VW EX UK.indd RH 17.04.2015

2

The flow curve diagram shows the flow versus pressure drop curves for all spool types. The relevant curve number for each spool type, operating position and flow direction is given in the table below.

	Position "b"			Position "a"			Position "0"				
Spool	P-A	B-T	P-B	P-B	A-T	P-A	P-A	P-B	A-T	B-T	P-T
001	2	2		2	2						
002	1	4		1	4		1	1	5	5	2
003	3	4		3	6				7		
004	2	3		2	3				7	7	
005	2	2		2	2		12				
006	1	4		1	4		7	7			
007	3	2		2	2			3		2	7
010	3			3							
011	2	2		2	2				14	14	
014	3	2		2	2		3		2		7
015	3	6		3	4					7	
016	2	2		2	2			12			
020B	4	4		2	3						
026B	4			4							
030B	2	3		1	2						
081	13	13		13	13						
082	13	13		13	13				1)	1)	
101B	11	10		10	9						
102	1	4		1	4		5	5	8	8	6
	P-B	A-T		P-A	B-T		P-A	P-B	A-T	B-T	P-T
008	4	5		4	5						9
009	5	5		6	7						7

	Position "b"			Position "a"		
Spool	P-A	P-B	A-B	P-B	A-T	
021	2	4		4	2	
	P-A	B-T		P-A	P-B	A-B
022	6	2		5	2	

Flow curve diagram

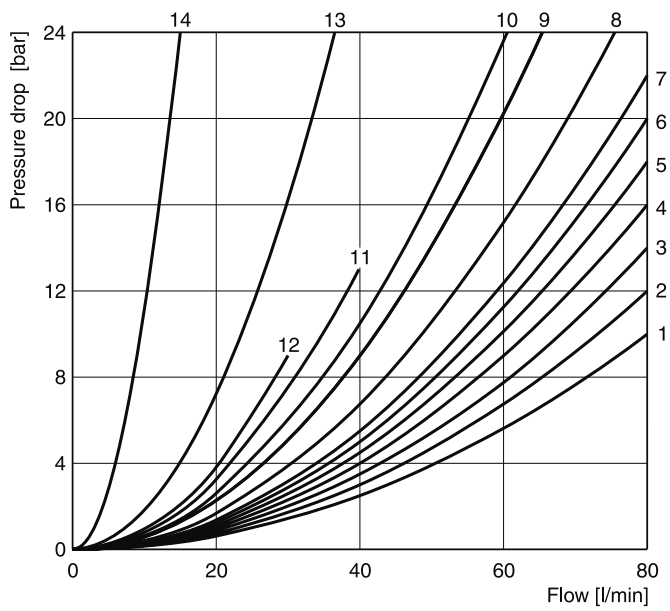

All characteristic curves measured with HLP46 at 50 °C.

1) Only for pressure compensation, no high flow possible.

The diagram below specifies the shift limits for valves with AC and DC solenoids. The specifications apply to a viscosity of 40 mm^2/s and balanced flow conditions. The shift limits can be considerably lower at unbalanced flow conditions. To avoid flow rates beyond the shift limits, a plug-in orifice can be inserted in the P-port.

Shift limit diagram with DC solenoid

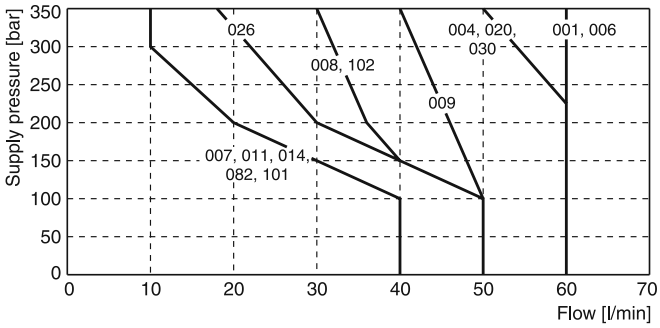

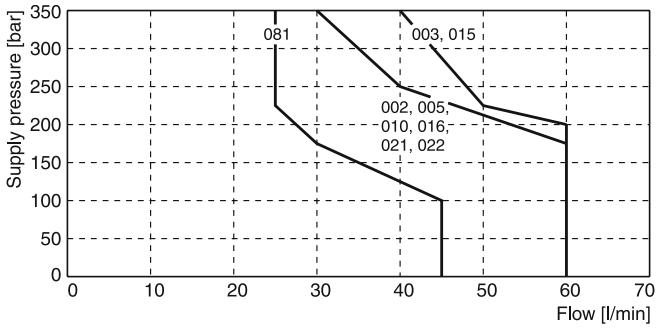

Measured with HLP46 at 50 °C, 90 % U_{nom} and warm solenoids

Shift limit diagram with AC solenoid

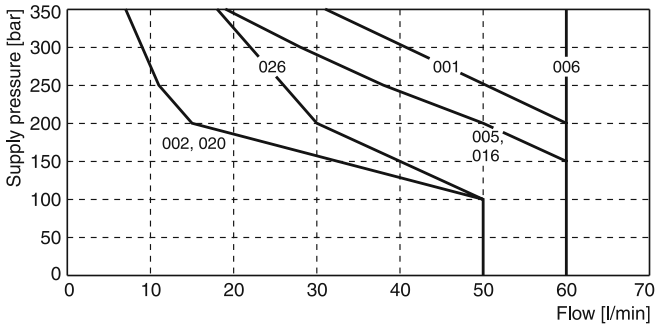

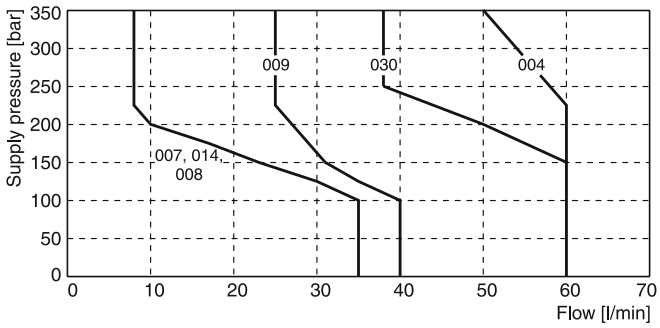

Measured with HLP46 at 50 °C, 95 % U_{nom} and warm solenoids

2

Dimensions

B, E -style

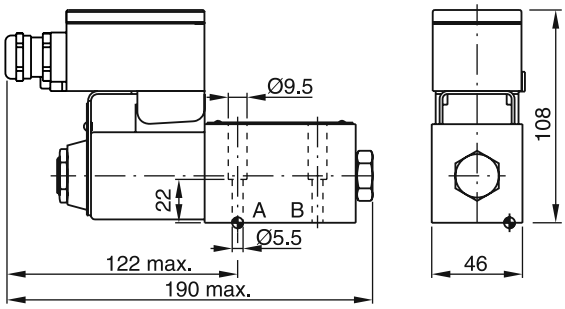

H, K -style

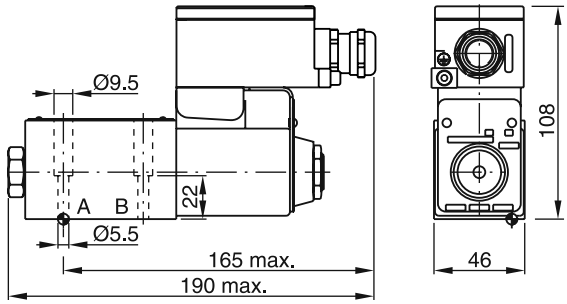

C, D -style

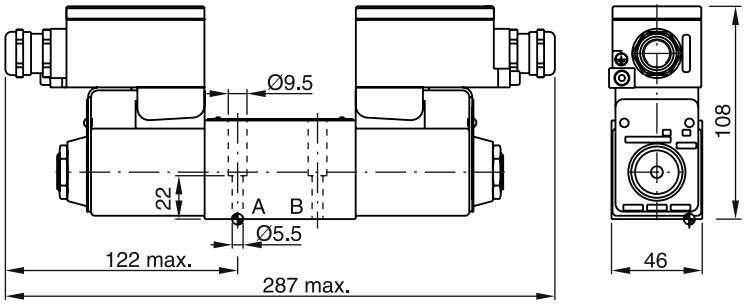

Surface finish	Kit			Kit NBR
R_{max}6.3 ▱ 0.01/100	BK375	4x M5x30 ISO 4762-12.9	7.6 Nm ±15 %	**NBR: SK-D1VW-N-91** FPM: SK-D1VW-V-91

The D1MW is based on the D1VW series of directional control valves size NG06, but offers additional corrosion protection of the valve body, the solenoid coil and the anchor tube as well as the typical solenoid connections for the mobile market such as AMP Junior Timer and DT04-2P “Deutsch”.

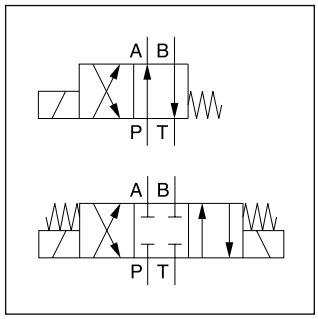

With AMP Junior Timer

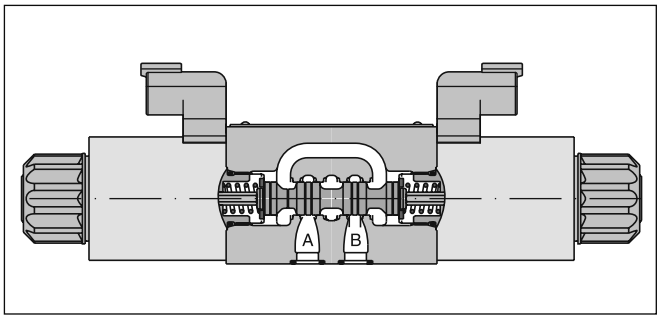

Connector DT04-2P “Deutsch”

Technical features

- High corrosion protection (optional)
- Solenoid connection:
  - Standard (as per EN175301-803)
  - AMP Junior Timer
  - DT04-2P “Deutsch”
- Robust design for rough applications
- Extended manual override with rubber cover (optional)

Technical data

General			
Design		Directional spool valve	
Actuation		Solenoid	
Size		DIN NG06 / CETOP 03 / NFPA D03	
Mounting interface		DIN 24340 A6 / ISO 4401 / CETOP RP 121-H / NFPA D03	
Mounting position		Unrestricted, preferably horizontal	
Ambient temperature	[°C]	-25...+60	
$MTTF_D$ value	[years]	150	
Weight	[kg]	1.5 (1 solenoid), 2.1 (2 solenoids)	
Vibration resistance	[g]	10 Sinus 5...2000 Hz acc. IEC 68-2-6 30 Random noise 20...2000 Hz acc. IEC 68-2-36 15 Shock acc. IEC 68-2-27	
Hydraulic			
Max. operating pressure	[bar]	P, A B: 350; T: 210	
Fluid		Hydraulic oil according to DIN 51524	
Fluid temperature	[°C]	-20 ... +70 (NBR: -25...+70)	
Viscosity permitted	[cSt] / [mm²/s]	2.8...400	
Viscosity recommended	[cSt] / [mm²/s]	30...80	
Filtration		ISO 4406 (1999); 18/16/13	
Flow max.	[l/min]	80 (see shift limits)	
Leakage at 50 bar	[ml/min]	Up to 10 per flow path, depending on spool	
Static / Dynamic			
Step response at 95 %	[ms]	Energized: 32 De-energized: 40	
Electrical characteristics			
Duty ratio		100 % ED; CAUTION: coil temperature up to 150 °C possible	
Max. switching frequency	[1/h]	15000	
Protection class		Standard (as per EN175301-803) IP65 acc. EN60529 (w. corr. mount. plug-in connector) AMP Junior Timer IP67 in acc. with EN60529 (with correctly mounted plug-in connector) DT04-2P “Deutsch” IP69K (with correctly mounted plug-in connector)	
	Code	K	J
Supply voltage	[V]	12 V =	24 V =
Tolerance supply voltage	[%]	±10	±10
Current consumption hold	[A]	2.72	1.29
Power consumption hold	[W]	32.7	31
Solenoid connection		Connector as per EN 175301-803 (code W), AMP Junior Timer (code A), DT04-2P “Deutsch“ connector (code J). Solenoid identification as per ISO 9461.	
Wiring min.	[mm²]	3 x 1.5 recommended	
Wiring length max.	[m]	50 recommended	

With electrical connections the protective conductor (PE ⏚) must be connected according to the relevant regulations.

D1MW UK.indd RH 17.04.2015

2

D	1	M	W		
Directional control valve	**Size DIN NG06 CETOP 03 NFPA D03**	**3-chamber valve for mobile and marine applications**	**Wet pin armature solenoid, threaded in tube**	**Spool type**	**Spool position**

3 position spools		
Code	Spool type	
	a	0	b
001	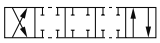	
002	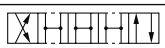	
004		
006		
008 [1]	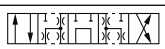	
011	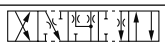	
021		
022	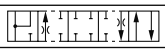	
081	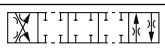	
082	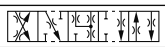	

2 position spools		
Code	Spool type	
	a	b
020		
030		

3 position spools			
Code	Spool position		
C	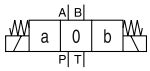		3 positions. Spring offset in position “0“. Operated in position “a“ or “b“.
	Standard	Spool type 008	
E	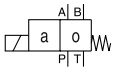 Operated in position “a“.	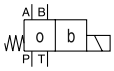 Operated in position “b“.	2 positions. Spring offset in position “0“.
F	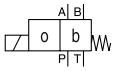 Spring offset in position “b“.	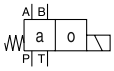 Spring offset in position “a“.	2 positions. Operated in position “0“.
K	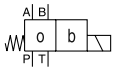 Operated in position “b“.	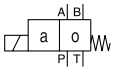 Operated in position “a“.	2 positions. Spring offset in position “0“.
M	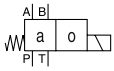 Spring offset in position “a“.	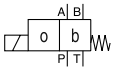 Spring offset in position “b“.	2 positions. Operated in position “0“.

2 position spools		
Code	Spool position	
B	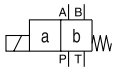	2 positions. Spring offset in position “b“. Operated in position “a“.
D	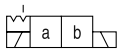	2 positions. Operated in position “a“ or “b“. No center or offset position.
H	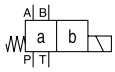	2 positions. Spring offset in position “a“. Operated in position “b“.

[1] Consider specific spool position.

[2] Please order plug separately.

[3] Only in combination with connection “J” and “W”.

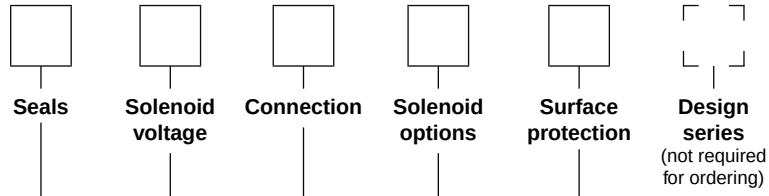

Code	Surface protection
omit	Standard, only for connection “J“ and “A“
1P [3]	Anti corrosion coating acc. to DIN 50021SS, 200h for extreme conditions.

Code	Solenoid option
omit	manual override (Standard)
T	without manual override
W	extended manual override with rubber cover

Code	Connection
W [2]	Connector as per EN 175301-803
J [2]	Connector DT04-2P “Deutsch“
A [2]	2-pin AMP Junior Timer

Code	Solenoid voltage
K	12 V =
J	24 V =

Code	Seals
N	NBR
V	FPM

Other spool types on request.

2

The flow curve diagram shows the flow versus pressure drop curves for all spool types. The relevant curve number for each spool type, operating position and flow direction is given in the table below.

	Position „b“		Position „a“		Position „0“				
Spool	P ->A	B->T	P->B	A->T	P->A	P->B	A->T	B->T	P->T
001	2	2	2	2	–	–	–	–	–
002	1	4	1	4	1	1	5	5	2
004	2	3	2	3	–	–	7	7	–
006	1	4	1	4	7	7	–	–	–
011	2	2	2	2	–	–	10	10	–
020B	4	4	2	3	–	–	–	–	–
030B	2	3	1	2	–	–	–	–	–
081	9	9	9	9	–	–	–	–	–
082	9	9	9	9	–	–	1)	1)	–
	P->B	A->T	P->A	B->T	P->A	P->B	A->T	B->T	P->T
008	4	5	4	5	–	–			8

	Position „b“			Position „a“		
	P ->A	P->B	A->B	P->B	A->T	
021	2	4	–	4	2	–
	P ->A	B->T		P ->A	P->B	A->B
022	6	2		5	2	–

Flow curve diagram

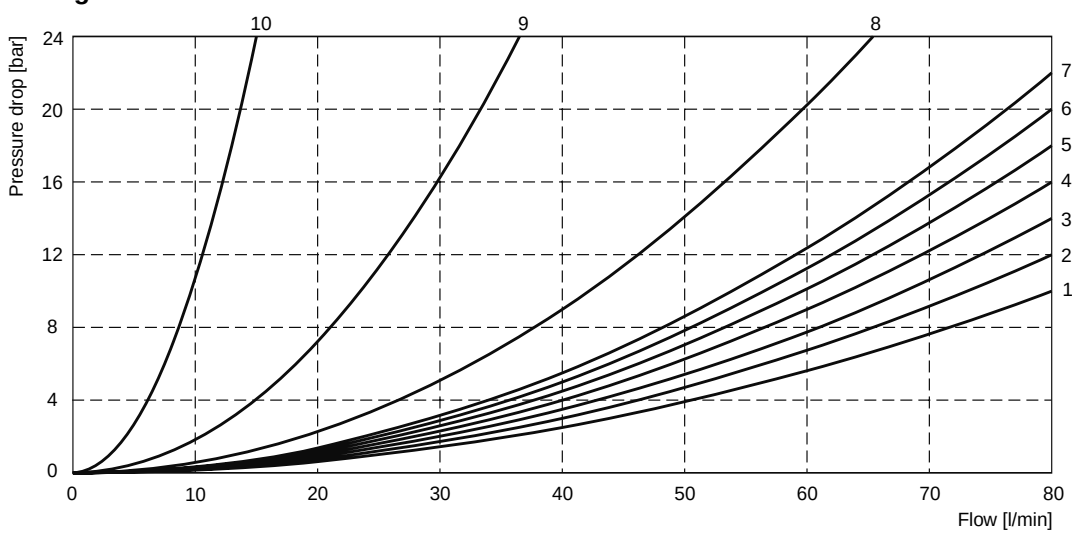

All characteristic curves measured with HLP46 at 50 °C.

Shift limits

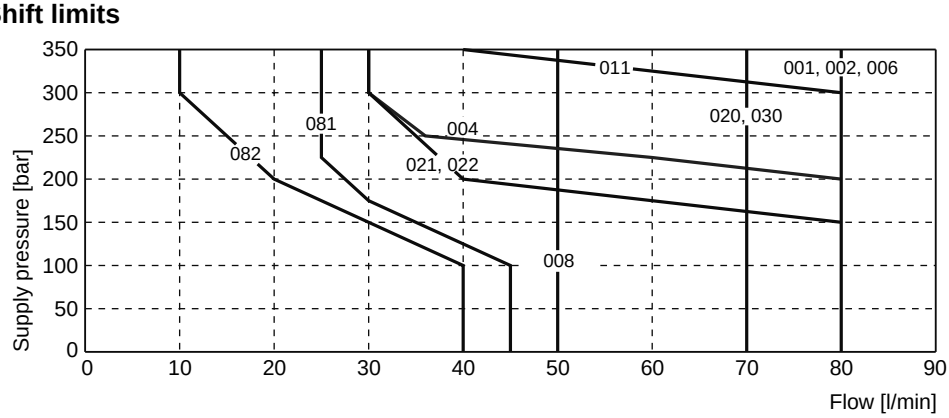

The diagram specifies the shift limits. Valves with spool position “F” or “M” can only be operated up to 70 % of the limits. The specifications apply to a viscosity of 40 mm^2/s and balanced flow conditions. The shift limits can be considerably lower at unbalanced flow conditions. To avoid flow rates beyond the shift limits, a plug-in orifice can be inserted in the P port.

Measured with HLP46 at 50 °C, 90 % U_{nom} and warm solenoids.

1) Only for pressure compensation, no higher flow possible.

Dimensions with EN 175301-803 Connector

B, E, F -style

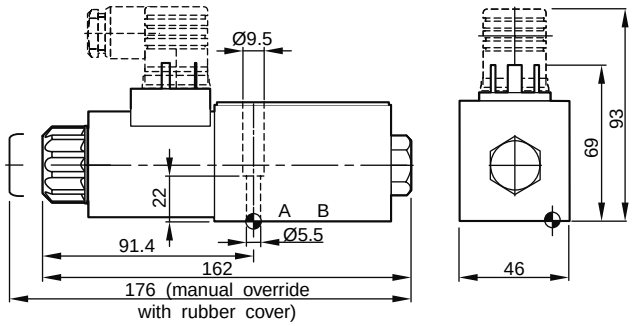

H, K, M -style

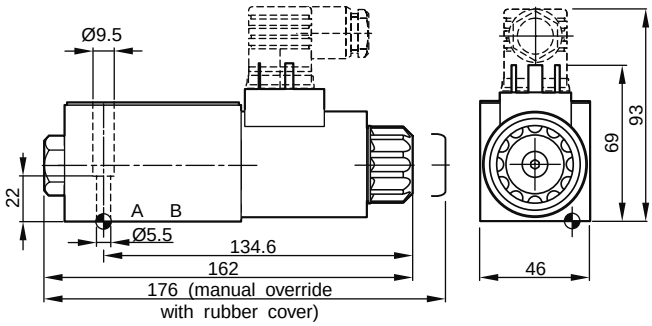

C and D -style

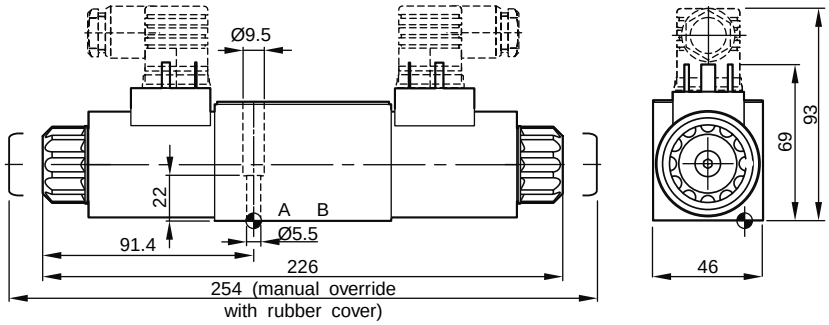

Dimensions with 2pin AMP Junior Timer Connector (only C and D -style shown)

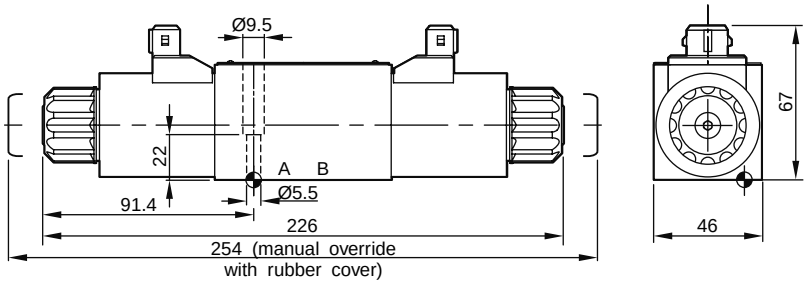

Dimensions with “Deutsch“ DT04-2P Connector (only C and D -style shown)

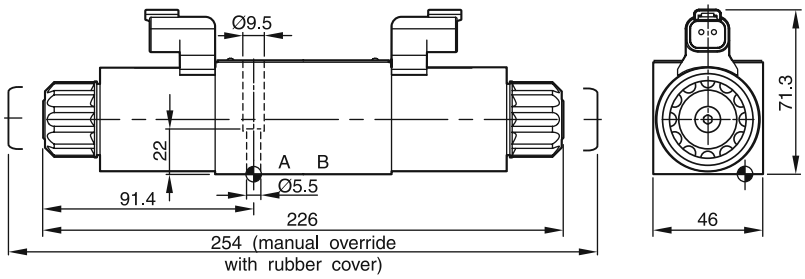

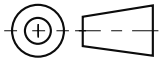

Surface finish	Kit			Kit
R_{max}6.3 ▱ 0.01/100	BK375	4x M5x30 ISO 4762-12.9	7.6 Nm ±15 %	**NBR: SK-D1VW-N-91** FPM: SK-D1VW-V-91

The space necessary to remove the plug per EN 175301-803, design type AF is at least 15 mm.
The torque for the screw M3 of the plug has to be 0.5 to 0.6 Nm.

D1MW UK.indd RH 17.04.2015

Notes

The NG10 direct operated directional control valve series D3W provides high functional limits up to 150 l/min in combination with a low, energy saving pressure drop.

The wide variety of options includes soft shift anchor tubes for smooth operation.

Versions with position control, additional surface protection and connector variants are shown in the following chapters.

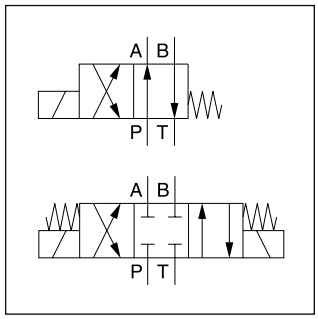

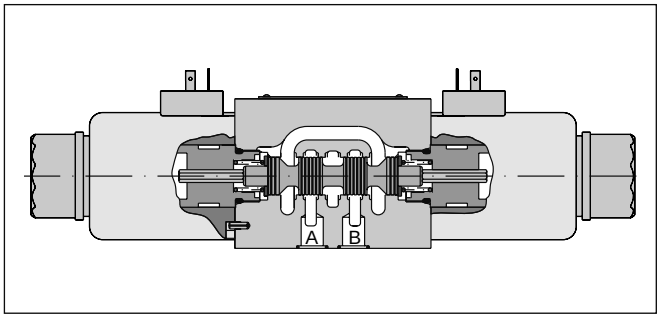

Technical data

General							
Design		Directional spool valve					
Actuation		Solenoid					
Size		DIN NG10 / CETOP 05 / NFPA D05					
Mounting interface		DIN 24340 A10 / ISO 4401 / CETOP RP 121-H / NFPA D05					
Mounting position		unrestricted, preferably horizontal					
Ambient temperature	[°C]	-25...+60					
$MTTF_D$ value	[years]	150					
Weight	[kg]	4.8 (1 solenoid), 6.3 (2 solenoids)					
Vibration resistance	[g]	10 Sinus 5...2000 Hz acc. IEC 68-2-6 30 Random noise 20...2000 Hz acc. IEC 68-2-36 15 Shock acc. IEC 68-2-27					
Hydraulic							
Max. operating pressure	[bar]	P, A B: 350; T: 210 (DC), 105 (AC)					
Fluid		Hydraulic oil according to DIN 51524					
Fluid temperature	[°C]	-20 ... +70 (NBR: -25...+70)					
Viscosity permitted	[cSt] / [mm²/s]	2.8...400					
Viscosity recommended	[cSt] / [mm²/s]	30...80					
Filtration		ISO 4406 (1999); 18/16/13					
Flow max.	[l/min]	150 (DC); 115 (AC) (see shift limits)					
Leakage at 50 bar	[ml/min]	Up to 20 per flow path, depending on spool					
Static / Dynamic							
Step response		see table response times					
Electrical characteristics							
Duty ratio		100 % ED; CAUTION: coil temperature up to 150 °C possible					
Max. switching frequency	[1/h]	10000					
Protection class		IP65 in accordance with EN 60529 (with correctly mounted plug-in connector)					
	Code	K	J	U	G	Y	T
Supply voltage / ripple	[V]	12 V =	24 V =	98 V =	205 V =	110 V at 50 Hz/ 120 V at 60 Hz	230 V at 50 Hz/ 240 V at 60 Hz
Tolerance supply voltage	[%]	±10	±10	±10	±10	±5	±5
Current consumption hold	[A]	3	1.5	0.35	0.18	0.8 / 0.72	0.4 / 0.36
Current consumption in rush	[A]	3	1.5	0.35	0.18	3.41 / 3.31	1.75 / 1.7
Power consumption hold	[W]	36	36	34	36	88 / 86	88 / 86
Power consumption in rush	[W]	36	36	34	36	375 / 397	385 / 408
Solenoid connection		Connector as per EN 175301-803, solenoid identification as per ISO 9461.					
Wiring min.	[mm²]	3 x 1.5 recommended					
Wiring length max.	[m]	50 recommended					

With electrical connections the protective conductor (PE ⏚) must be connected according to the relevant regulations.

D3W UK.indd RH 17.04.2015

2

D	3	W		
Directional control valve	**Size DIN NG10 CETOP 05 NFPA D05**	**Wet pin solenoid**	**Spool type**	**Spool position**

3 position spools	
Code	Spool type
	a 0 b
001	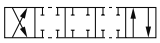
002	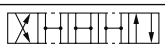
003	
004	
005	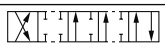
006	
007	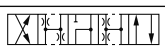
008 [1]	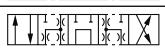
009 [1]	
010 [2]	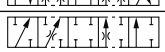
011	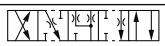
012	
014	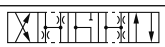
015	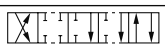
016	
021 [2]	
022 [2]	
031 [2]	
032 [2]	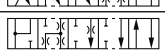
081 [2]	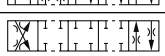
082 [2]	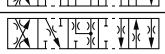
102 [2]	

2 position spools	
Code	Spool type
	a b
020	
026	
030	
101 [2]	

3 position spools			
Code	Spool position		
C	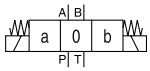		**3 positions. Spring offset in position “0“. Operated in position “a“ or “b“.**
	Standard	Spool type 008, 009	
E	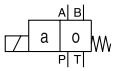 Operated in position “a“.	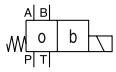 Operated in position “b“.	**2 positions. Spring offset in position “0“.**
F	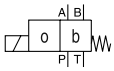 Spring offset in position “b“.	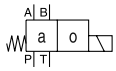 Spring offset in position “a“.	2 positions. Operated in position “0“.
K	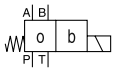 Operated in position “b“.	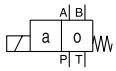 Operated in position “a“.	**2 positions. Spring offset in position “0“.**
M	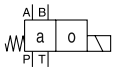 Spring offset in position “a“.	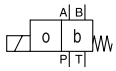 Spring offset in position “b“.	2 positions. Operated in position “0“.

2 position spools		
Code	Spool position	
B	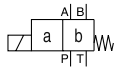	**2 positions. Spring offset in position “b“. Operated in position “a“.**
D	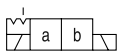	**2 positions. Operated in position “a“ or “b“. No center or offset position.**
H	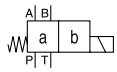	**2 positions. Spring offset in position “a“. Operated in position “b“.**

[1] Consider specific spool position.
[2] Only available for DC voltage.
[3] To be used in combination with rectifier plugs at 120 VAC / 230 VAC power supply.
[4] DC only.

D3W UK.indd RH 17.04.2015

		W			
Seals	**Solenoid voltage**	**Connector as per EN 175301-803, without plug** (Please order plug separately)	**Solenoid option**	**Shift response**	**Design series** (not required for ordering)

Code	Shift response
omit	**Standard response**
S4 [4)]	orifice diameter 1.0 mm
S7 [4)]	orifice diameter 1.75 mm

Code	Solenoid option
omit	**manual override (Standard)**
T	without manual override

Code	Solenoid voltage
K	**12 V =**
J	**24 V =**
U [3)]	98 V =
G [3)]	205 V =
Y	110 V 50 Hz / 120 V 60 Hz
T	230 V 50 Hz / 240 V 60 Hz

Code	Seals
N	**NBR**
V	FPM

Bold letters =
Short-term availability

Further spool types and solenoid voltages on request.

D3W UK.indd RH 17.04.2015

2

The flow curve diagram shows the flow versus pressure drop curves for all spool types. For each spool type, operating position and flow direction the relevant curve number is given in the table below.

	Position b		Position a		Position 0					
Spool	P->A	B->T	P->B	A->T	P->A	P->B	A->T	B->T	P->T	A->B
001	6	5	6	6	–	–	–	–	–	–
002	3	5	3	3	1	1	4	5	1	6
003	2	2	3	1	–	–	3	–	–	–
004	5	4	4	4	–	–	8	8	–	9
005	2	2	2	2	3	–	–	–	–	–
006	1	2	1	3	2	2	–	–	–	3
007	2	1	2	2	–	1	–	2	3	–
010	2	–	2	–	–	–	–	–	–	–
011	2	2	2	2	–	–	11	11	–	11
012	1	2	2	2	10	10	10	10	11	11
014	1	2	2	2	1	–	2	–	3	–
015	2	1	2	2	–	–	–	3	–	–
016	2	2	1	2	–	2	–	–	–	–
020	6	6	5	7	–	–	–	–	–	–
026	5	–	5	–	–	–	–	–	–	–
030	4	5	3	5	–	–	–	–	–	–
	P->B	A->T	P->A	B->T	P->A	P->B	A->T	B->T	P->T	A->B
008	8	7	7	6	–	–	–	–	9	–
009	4	4	5	8	–	–	–	–	9	–

	Position b			Position a		
	P->A	P->B	A->B	P->B	A->T	
021	2	4	8	3	2	
	P->A	B->T		P->A	P->B	A->B
022	3	2		3	2	8

Flow curve diagram

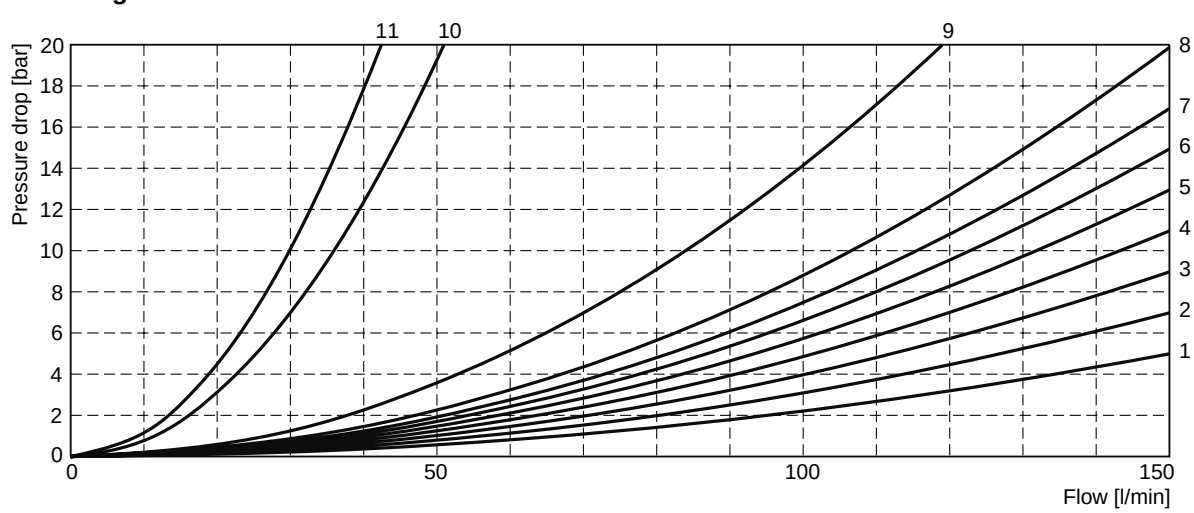

All characteristic curves measured with HLP46 at 50 °C.

The diagrams below specify the shift limits for valves with DC and AC solenoids. Valves with spool position “F” or “M” can only be operated up to 70 % of the limits. The specifications apply to a viscosity of 40 mm²/s and balanced flow conditions. The shift limits can be considerably lower at unbalanced flow conditions. To avoid flow rates beyond the shift limits, a plug-in orifice can be inserted in the P-port.

Shift limits, DC voltage

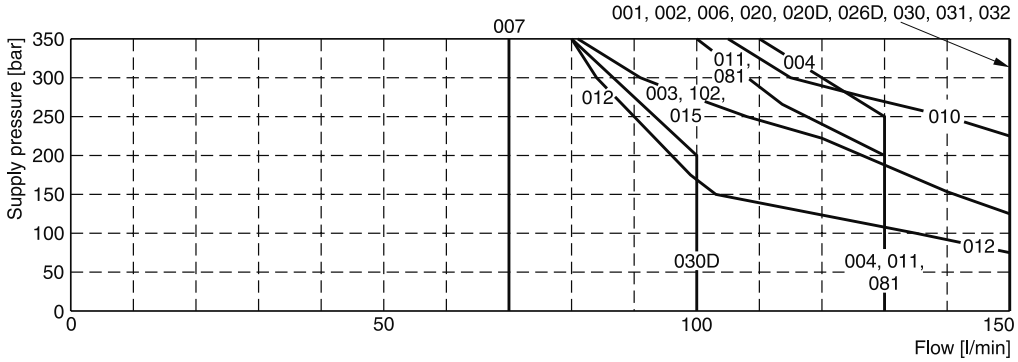

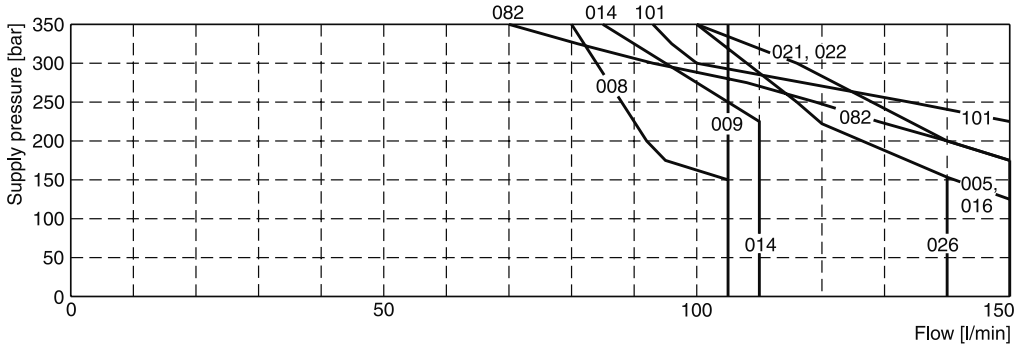

Measured with HLP46 at 50 °C, 90 % U_{nom} and warm solenoids.

Shift limits, AC voltage

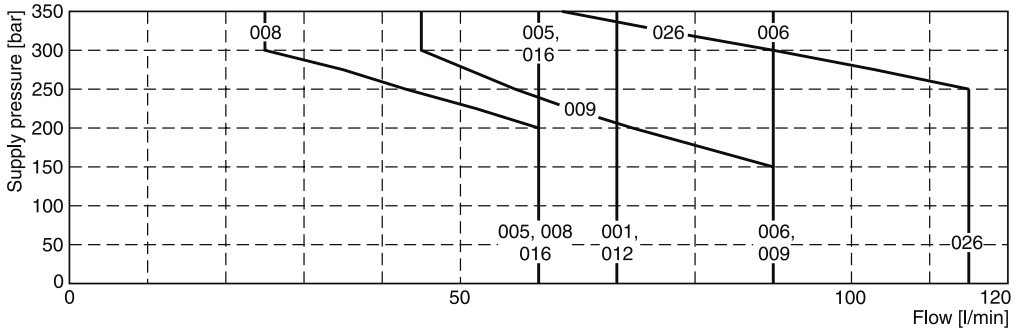

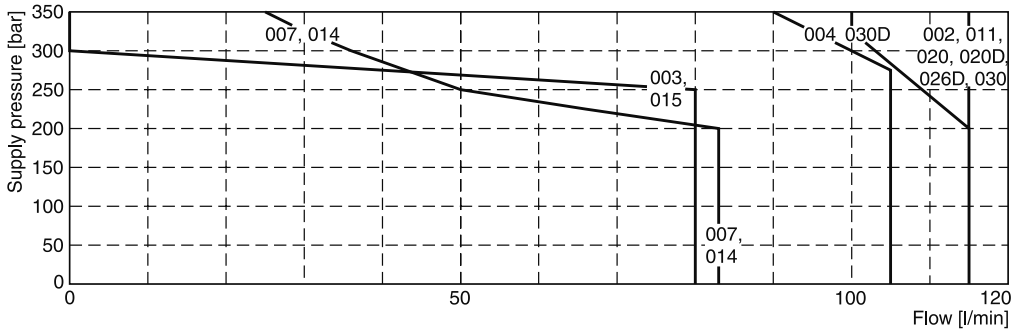

Measured with HLP46 at 50 °C, 95 % U_{nom} and warm solenoids.

2

Shift limits soft shift

The diagrams below specify the shift limits. Valves with spool position “F” or “M” can only be operated up to 70 % of the limits. The specifications apply to a viscosity of 40 mm²/s and balanced flow conditions. The shift limits can be considerably lower at unbalanced flow conditions. To avoid flow rates beyond the shift limits, a plug-in orifice can be inserted in the P-port.

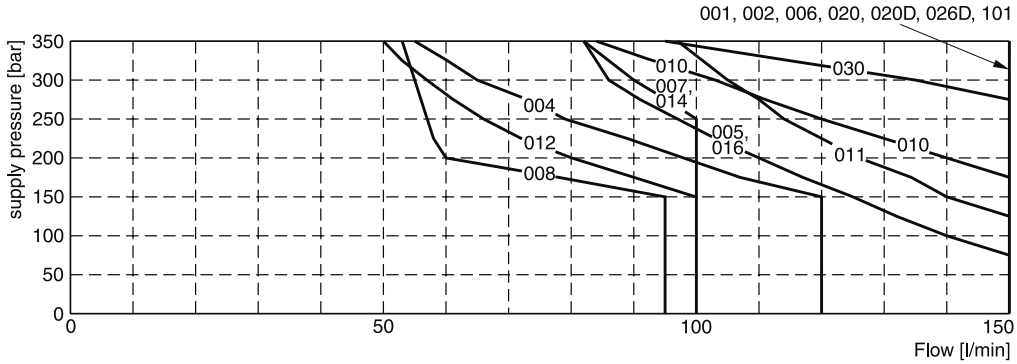

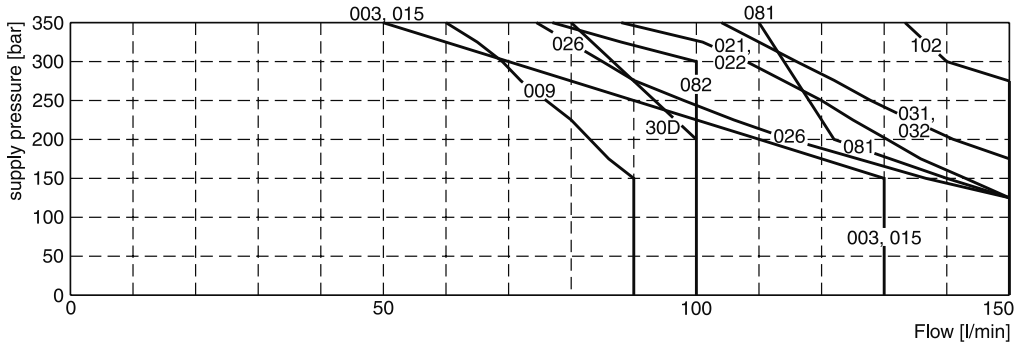

Measured with HLP46 at 50 °C, 90 % U_{nom} and warm solenoids.

Response times D3W Soft Shift

Code	Orifice size	Energize	De-energize
(Standard)	–	105 ms (DC) 21 ms (AC)*	85 ms (DC) 35 ms (AC)*
S4	1.0 mm	320 ms	550 ms
S7	1.75 mm	160 ms	370 ms

Step response times were obtained under the following conditions: HLP46 at 50 °C with the valve operating at 175 bar and 65 l/min.
Published response times are nominal and may vary with spool, flow, pressure and temperature.

Acceleration for different orifice sizes (archived against a valve without soft shift)

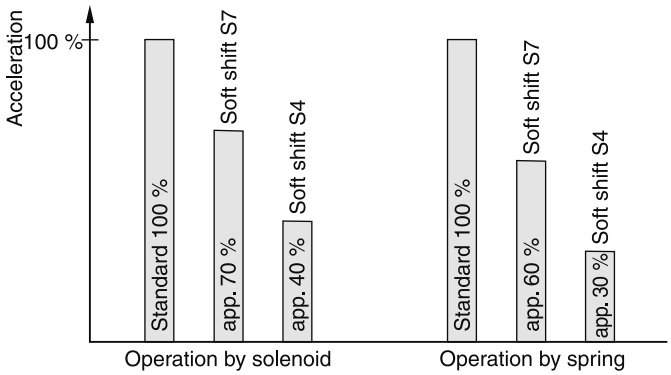

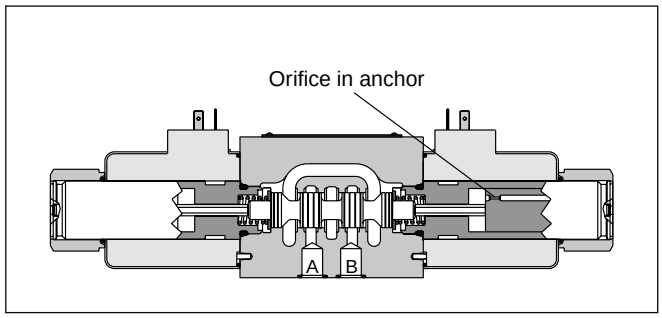

For even softer shifting, the proportional spools 081, 082, 101 and 102 can be used.

* For AC input and soft shift use rectifier plug.

D3W UK.indd RH 17.04.2015

Interface EN 175301-803, DC solenoid

B, E, F -style

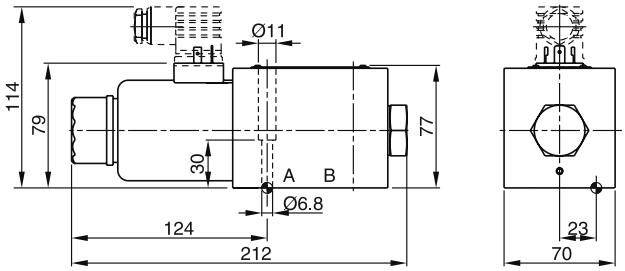

H, K, M -style

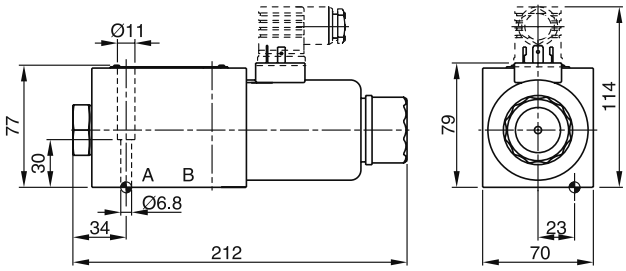

C, D -style

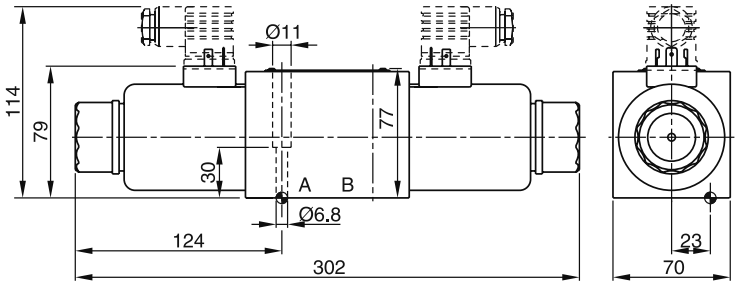

Interface EN 175301-803, AC solenoid

B, E, F -style

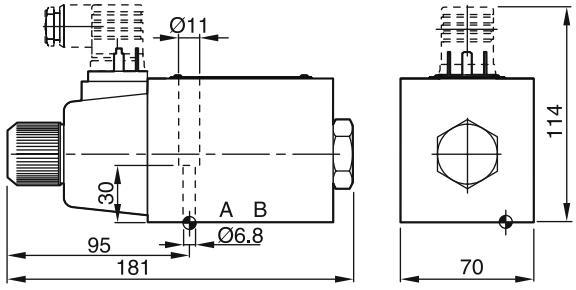

H, K, M -style

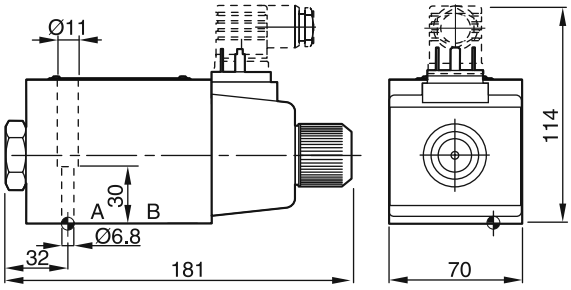

C, D -style

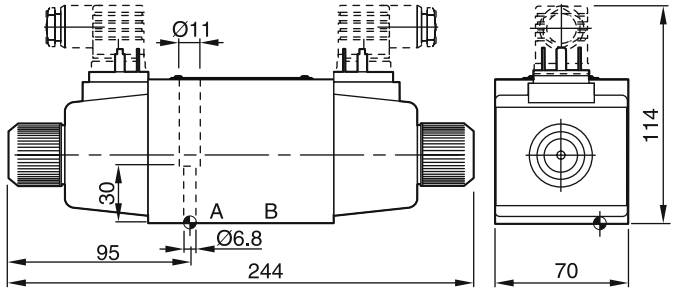

Surface finish	Kit			Kit
R_{max}6.3 ⏥ 0.01/100	BK385	4x M6x40 ISO 4762-12.9	13.2 Nm ±15 %	**NBR: SK-D3W-30** FPM: SK-D3W-V-30

The space necessary to remove the plug per EN 175301-803, design type AF is at least 15 mm.
The torque for the screw M3 of the plug has to be 0.5 to 0.6 Nm.

D3W UK.indd RH 17.04.2015

2

The direct operated valves series D3W with inductive position control are typically used in safety relevant applications. The start or the end position can be monitored.

The position control is available for single solenoid valves only.

The fail-safe position of the directional valve during power failure is the spring offset position.

Please find detailed information on the machine directive in the position paper in chapter 1.

D3W*B

D3W*C

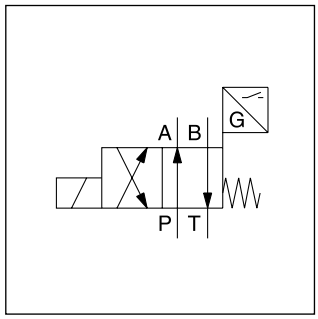

D3W*B

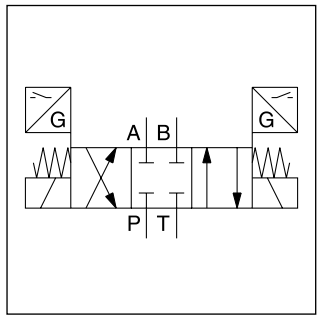

D3W*C

Attention:

The adjustment of the position control is factory set and sealed. Replacement and repairs can only be undertaken by the manufacturer.

D3W*B

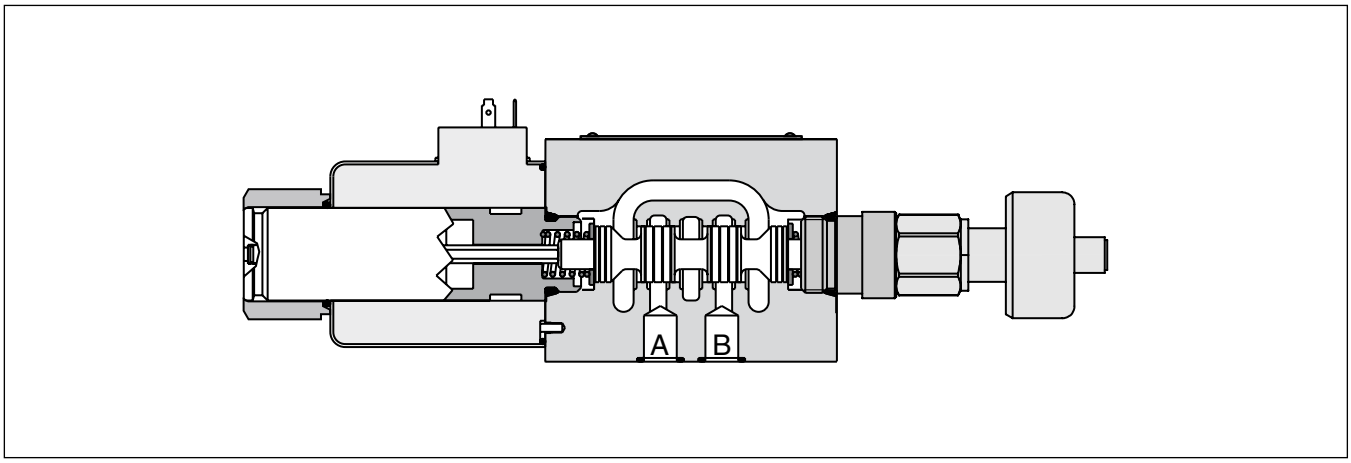

D3W*C

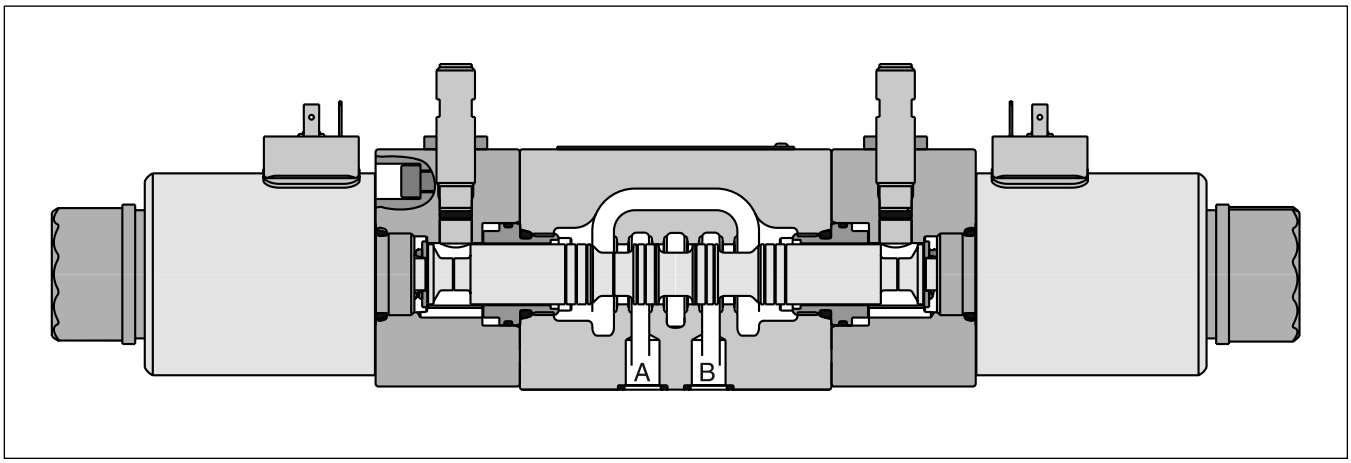

General					
Design		Directional spool valve			
Actuation		Solenoid			
Size		DIN NG10 / CETOP 05 / NFPA D05			
Mounting interface		DIN 24340 A10 / ISO 4401 / CETOP RP 121-H / NFPA D05			
Mounting position		unrestricted, preferably horizontal			
Ambient temperature	[°C]	-20...+60			
$MTTF_D$ value	[years]	150			
Weight	[kg]	5.2			
Hydraulic					
Max. operating pressure	[bar]	P, A, B: 350; T: 210			
Fluid		Hydraulic oil according to DIN 51524			
Fluid temperature	[°C]	-20 ... +70			
Viscosity permitted	[cSt] / [mm²/s]	2.8...400			
Viscosity recommended	[cSt] / [mm²/s]	30...80			
Filtration		ISO 4406 (1999); 18/16/13			
Flow max.	[l/min]	150 (see shift limits)			
Leakage at 50 bar	[ml/min]	Up to 20 per flow path, depending on spool			
Static / Dynamic					
Step response at 95 %		Energized: 105; de-energized: 85			
Electrical characteristics					
Duty ratio		100 % ED; CAUTION: coil temperature up to 150 °C possible			
Max. switching frequency	[1/h]	10000			
Protection class		IP65 in accordance with EN 60529 (with correctly mounted plug-in connector)			
	Code	K	J	U	G
Supply voltage / ripple	[V]	12 V =	24 V =	98 V =	205 V =
Tolerance supply voltage	[%]	±10	±10	±10	±10
Current consumption hold	[A]	3	1.5	0.35	0.18
Power consumption hold	[W]	36	36	34	36
Solenoid connection		Connector as per EN 175301-803, solenoid identification as per ISO 9461.			
Wiring min.	[mm²]	3 x 1.5 recommended			
Wiring length max.	[m]	50 recommended			

With electrical connections the protective conductor (PE ⏚) must be connected according to the relevant regulations.

2

D	3	W		
Directional control valve	**Size DIN NG10 CETOP 05 NFPA D05**	**Wet pin solenoid**	**Spool type**	**Spool position**

3 position spools	
Code	Spool type
001	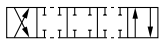
002	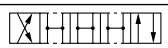
003 [1]	
004	
005 [2]	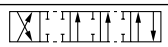
015 [2]	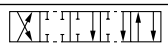
016 [1]	
021 [1]	
022 [2]	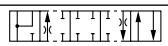

2 position spools	
Code	Spool type
020	
026	
030	

3 position spools		
Code	Spool position	
E	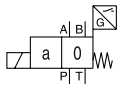	2 positions. Spring offset in position “0“. Operated in position “a“.
F	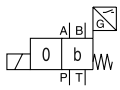	2 positions. Spring offset in position “b“. Operated in position “0“.
K	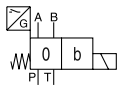	2 positions. Spring offset in position “0“. Operated in position “b“.
M	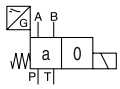	2 positions. Spring offset in position “a“. Operated in position “0“.

2 position spools		
Code	Spool position	
B	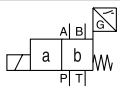	2 positions. Spring offset in position “b“. Operated in position “a“.
H	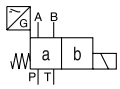	2 positions. Spring offset in position “a“. Operated in position “b“.

[1] Only available for spool pos. “K“ and “M“.

[2] Only available for spool pos. “E“ and “F“.

[3] To be used in combination with rectifier plugs at 120 VAC / 230 VAC power supply.

[4] Please order female connector M12x1 separately (see accessories, female connector M12x1 (order no.: 5004109).

[5] For hydraulic presses according to the safety regulations EN 693, solenoid option “T” (without manual override) and accessories “I4” or “I5” (start position monitored) are required.

Ordering Code Single Solenoid Valve

Series D3W Inductive Position Control

		W			N	
Seals	**Solenoid voltage**	**Connector as per EN 175301-803, without plug** (Please order plug separately)	**Manual override option**	**Position control** [4]	**Inductive position control with CE-code**	**Design series** (not required for ordering)

Code	Position control	Spool position
I2	End position monitored side B	E, F, B (Solenoid on a-side)
I5 [5]	Start position monitored side B	
I1	End position monitored side A	K, M, H (Solenoid on b-side)
I4 [5]	Start position monitored side A	

Code	Solenoid option
omit	manual override (Standard)
T [5]	without manual override

Code	Solenoid voltage
K	12 V =
J	24 V =
U [3]	98 V =
G [3]	205 V =

Code	Seals
N	NBR
V	FPM

Further spool types and solenoid voltages on request.

Ordering Code Double Solenoid Valve

Series D3W Inductive Position Control

D	3	W					W			N	
Directional control valve	**Size DIN NG10 CETOP 05 NFPA D05**	**Wet pin solenoid**	**Spool type**	**Spool position**	**Seals**	**Solenoid voltage**	**Connector as per EN 175301-803, without plug** (Please order plug separately)	**Manual override option**	**Position control 3)**	**Inductive position control with CE-code**	**Design series** (not required for ordering)

3 position spools	
Code	Spool type
001	a 0 b 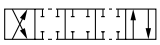
002	
004	

2 position spools	
Code	Spool type
020 1)	a b
026 1)	

3 position spools		
Code	Spool position	
C	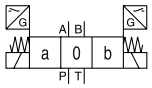	3 positions. Spring offset in position “0“. Operated in position “a“ or “b“.

2 position spools		
Code	Spool position	
D	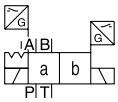	2 positions. Spring offset in position “a“. Operated in position “b“.

Code	Position control	Spool position
I3N	End positions	C, D
I6N 4)	Start positions	C

Code	Solenoid option
omit	manual override (Standard)
T 4)	without manual override

Code	Solenoid voltage
K	12 V=
J	24 V=
U 2)	98 V=
G 2)	205 V=

Code	Seals
N	NBR
V	FPM

Further spool types and solenoid voltages on request.

1) Only available for end position control code “I3“.

2) To be used in combination with rectifier plugs at 120 VAC / 230 VAC power supply.

3) Please order plug M12 x 1 separately. Straight plug recommended – no defined position possible for angled plug.

4) For hydraulic presses according to the safety regulations EN 693, solenoid option “T” (without manual override) and accessory “I6” (start positions) is required.

Single solenoid valve

Electrical characteristics of position control as per IEC 61076-2-101 (M12x1)

Supply voltage	[VDC]	24
Tolernace supply voltage	[%]	±20
Ripple supply voltage	[%]	≤10
Polarity protection	[V]	300
Current consumption without load	[mA]	≤20
Switching hysteresis	[mm]	<0.06
Max. output current per channel, ohmic	[mA]	250
Ambient temperature	[°C]	-20 … +60
Protection		IP65 acc. EN 60529 (with correctly mounted plug-in connector)
Min. distance to next AC solenoid	[m]	0.1
Interface		M12x1 to IEC 61076-2-101
CE conform		EN 61000-4-2 / EN 61000-4-4 / EN 61000-4-6 [1)] / ENV 50140 / ENV 50204

[1)] Only guaranted with screened cable and female connector

M12 pin assignment

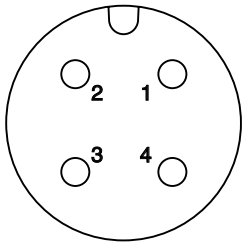

1 + U_S 19.2...28.8 V
2 Out B: normally open
3 0V
4 Out A: normally closed

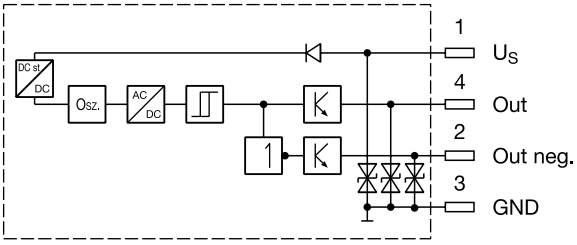

Outputs: Open collector

Definitions

Start position monitored:

The valve is de-energized. The inductive switch gives a signal at the moment when the spool leaves the spring offset position (below 15 % spool stroke).
At the switching point the spool is located within the closed position. It is secured that only the flow paths of the offset position are granted.

End position monitored:

The inductive switch gives a signal before the end position is reached (above 85 % spool stroke).

The switch can only be located on the opposite side of the solenoid for direct operated valves.
Please order plug M12x1 separately (see accessories, plug M12x1; order no.: 5004109).

2

Double solenoid valves

Electrical characteristics of position control as per IEC 61076-2-101 (M12x1)

Protection class		IP65 in accordance with EN 60529 (with correctly mounted plug-in connector)
Ambient temperature	[°C]	0...+50
Supply voltage Us / ripple	[V]	10...30 / ±10 %
Current consumption without load	[mA]	≤ 10
Max. output current per channel, ohmic	[mA]	200
Min. output load per channel, ohmic	[kOhm]	100
Max. output drop at 0.2 A	[V]	≤ 2
EMC		EN61000-6-4 / EN61000-6-2
Min. distance to next AC solenoid	[m]	>0.1
Interface		M12x1 acc. to IEC 61076-2-101
Wiring min.	[mm²]	3 x 0.14 brad shield recommended
Wiring length max.	[m]	50 recommended

M12 pin assignment

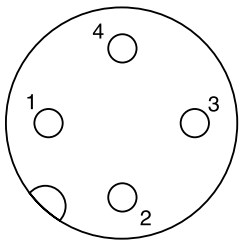

1 Us 10...30 V
2 not connected
3 0 V
4 Out A: normally open

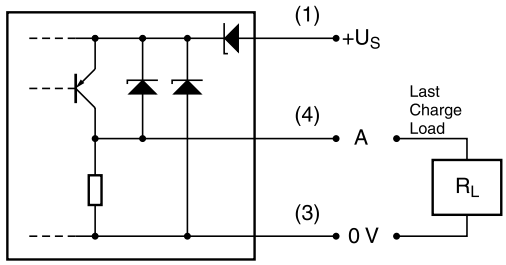

Definitions

Start position monitored:

The valve is de-energized. The inductive switch gives a signal at the moment when the spool leaves the center position (below 15 % spool stroke).
At the switching point the spool is located within the closed position. It is secured that only the flow paths of the offset position are granted.

End position monitored:

The inductive switch gives a signal before the end position is reached (above 85 % spool stroke).

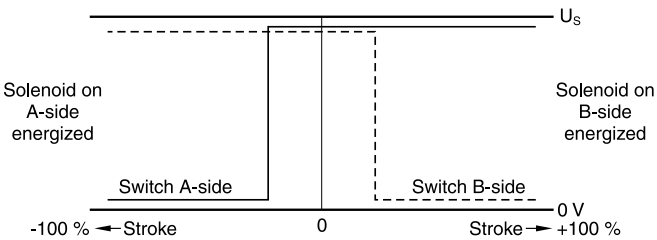

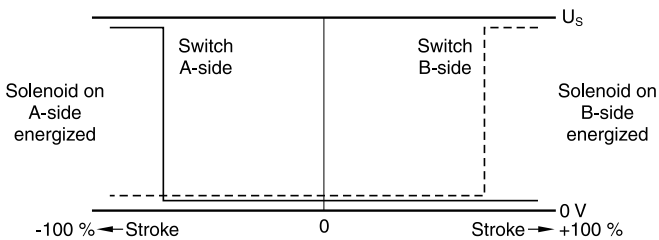

Please order plug M12 x 1 separately. Straight plug recommended – no defined position possible for angled plug.

The flow curve diagram shows the flow versus pressure drop curves for all spool types. The relevant curve number for each spool type, operating position and flow direction is given in the table below.

	Position b		Position a		Position 0					
Spool	P->A	B->T	P->B	A->T	P->A	P->B	A->T	B->T	P->T	A->B
001	6	5	6	6	–	–	–	–	–	–
002	3	5	3	3	1	1	4	5	1	6
003	2	2	3	1	–	–	3	–	–	
004	5	4	4	4	–	–	8	8	–	9
005	2	2	2	2	3	–	–	–	–	–
015	2	1	2	2	–	–	–	3	–	–
016	2	2	1	2	–	2	–	–	–	–
020	6	6	5	7	–	–	–	–	–	–
026	5	–	5	–	–	–	–	–	–	–
030	4	5	3	5	–	–	–	–	–	–
	Position b			**Position a**						
	P->A	P->B	A->B	P->B	A->T					
021	2	4	8	3	2					
	P->A	B->T		P->A	P->B	A->B				
022	3	2		3	2	8				

Flow curve diagram

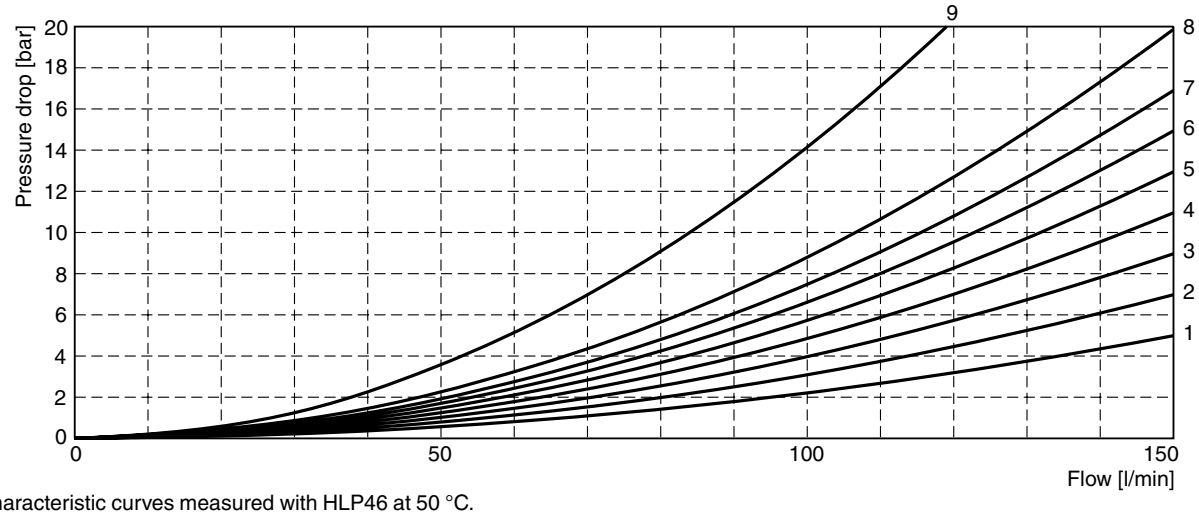

All characteristic curves measured with HLP46 at 50 °C.

Shift limit diagram

The diagram below specifies the shift limits. Valves with spool position “F” or “M” can only be operated up to 70 % of the limits. The specifications apply to a viscosity of 40 mm²/s and balanced flow conditions. The shift limits can be considerably lower at unbalanced flow conditions. To avoid flow rates beyond the shift limits, a plug-in orifice can be inserted in the P-port.

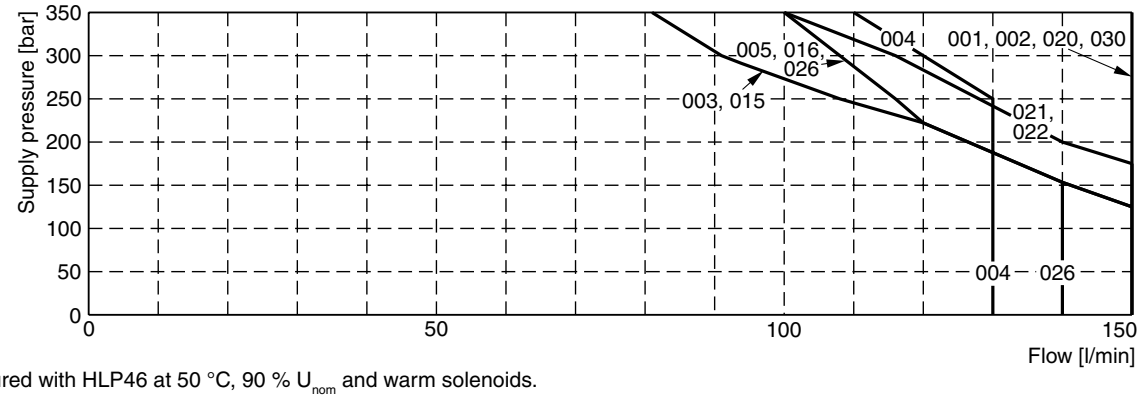

Measured with HLP46 at 50 °C, 90 % U_{nom} and warm solenoids.

2

Interface EN 175301-803, DC solenoid, without plug M12x1[1)]
B, E, F -style

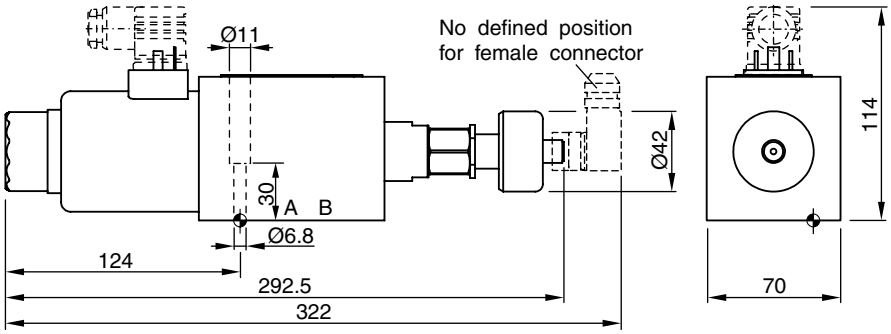

H, K, M -style

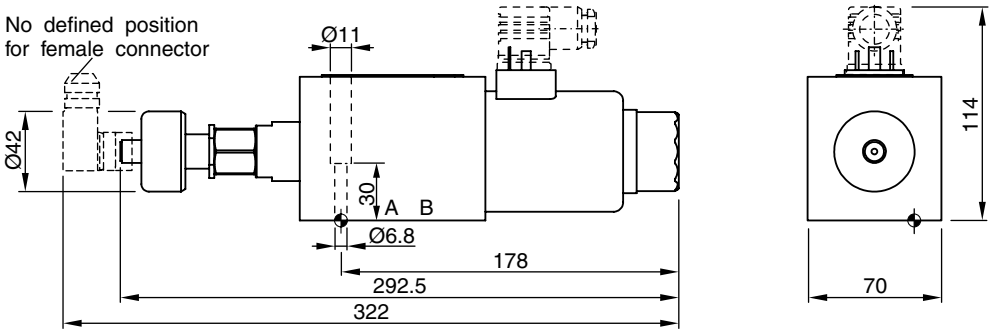

Interface EN175301-803, DC solenoid, without plug M12x1 [2)]
C, D -style

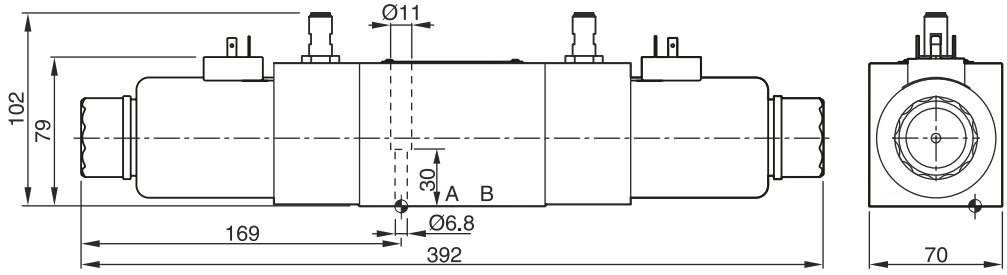

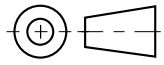

Surface finish	Kit			Kit
R_{max}6.3 ▱ 0.01/100	BK385	4x M6x40 ISO 4762-12.9	13.2 Nm ±15 %	**NBR: SK-D3W-30** FPM: SK-D3W-V-30

The space necessary to remove the plug per EN 175301-803, design type AF is at least 15 mm.
The torque for the screw M3 of the plug has to be 0.5 to 0.6 Nm.
The space necessary to remove the M12x1 female connector is at least 22 mm.

Attention:

The adjustment of the position control is factory set and sealed. Replacement and repairs can only be undertaken by the manufacturer.

[1)] Please order plug M12x1 separately (see accessories, plug M12x1; order no.: 5004109).
[2)] Please order plug M12x1 separately. Straight plug recommended - no defined position possible for angled plug.

The D3MW is a solenoid operated directional control valve size NG10 in 3-chamber design. It is direct operated by wet pin solenoids.

The D3MW is designed for mobile and marine applications.

It is based on the D3W series, but offers additional corrosion protection of the valve body, the solenoid coil and the anchor tube as well as the typical solenoid connections for the mobile market such as AMP Junior Timer.

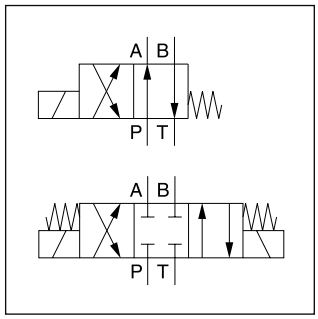

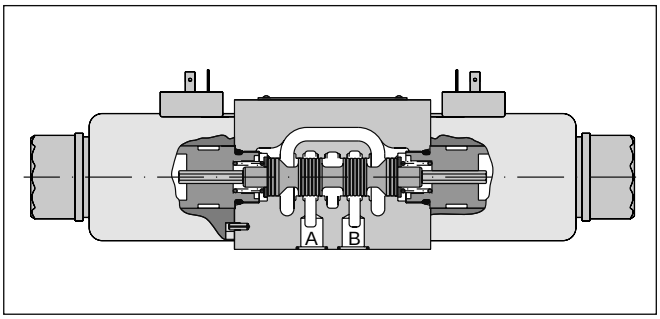

Features:

- High corrosion protection
- Solenoid connection:
  - Standard (as per EN175301-803)
  - AMP Junior Timer
  - DT04-2P “Deutsch”
- Robust design for rough applications

Technical data

General			
Design		Directional spool valve	
Actuation		Solenoid	
Size		DIN NG10 / CETOP 05 / NFPA D05	
Mounting interface		DIN 24340 A10 / ISO 4401 / CETOP RP 121-H / NFPA D05	
Mounting position		unrestricted, preferably horizontal	
Ambient temperature	[°C]	-25...+60	
$MTTF_D$ value	[years]	150	
Weight	[kg]	4.8 (1 solenoid), 6.3 (2 solenoids)	
Vibration resistance	[g]	10 Sinus 5...2000 Hz acc. IEC 68-2-6 30 Random noise 20...2000 Hz acc. IEC 68-2-36 15 Shock acc. IEC 68-2-27	
Hydraulic			
Max. operating pressure	[bar]	P, A B: 350; T: 210	
Fluid		Hydraulic oil according to DIN 51524	
Fluid temperature	[°C]	-20 ... +70 (NBR: -25...+70)	
Viscosity permitted	[cSt] / [mm²/s]	2.8...400	
Viscosity recommended	[cSt] / [mm²/s]	30...80	
Filtration		ISO 4406 (1999); 18/16/13	
Flow max.	[l/min]	150 (see shift limits)	
Leakage at 50 bar	[ml/min]	Up to 20 per flow path, depending on spool	
Static / Dynamic			
Step response at 95 %	[ms]	Energized: 105 De-energized: 85	
Electrical characteristics			
Duty ratio		100 % ED; CAUTION: coil temperature up to 150 °C possible	
Max. switching frequency	[1/h]	10000	
Protection class		Standard (as per EN175301-803) IP65 in acc. with EN60529 (with correctly mounted plug-in connector) AMP Junior Timer IP67 in acc. with EN60529 (with correctly mounted plug-in connector) DT04-P2 “Deutsch” IP69K (with correctly mounted plug-in connector)	
	Code	K	J
Supply voltage / ripple	[V]	12 V =	24 V =
Tolerance supply voltage	[%]	±10	±10
Current consumption	[A]	3	1.5
Power consumption	[W]	36	36
Solenoid connection		Connector as per EN 175301-803 (code W), AMP Junior Timer (code A), DT04-2P “Deutsch” connector (code J). Solenoid ident. as per ISO 9461.	
Wiring min.	[mm²]	3 x 1.5 recommended	
Wiring length max.	[m]	50 recommended	

With electrical connections the protective conductor (PE ⏚) must be connected according to the relevant regulations.

2

D	3	M	W		
Directional control valve	**Size DIN NG10 CETOP 05 NFPA D05**	**3-chamber valve for mobile and marine applications**	**Wet pin solenoid**	**Spool type**	**Spool position**

3 position spools			
Code	Spool type		
	a	0	b
001	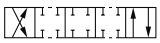		
002	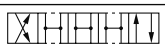		
004			
006			
008[1]	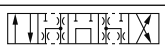		
011	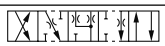		
021			
022	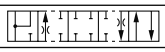		
081	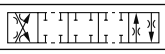		
082	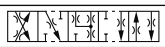		

2 position spools		
Code	Spool type	
	a	b
020		
030		

3 position spools			
Code	Spool position		
C	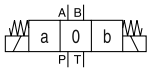		3 positions. Spring offset in position “0“. Operated in position “a“ or “b“.
	Standard	Spool type 008	
E	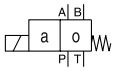 Operated in position “a“.	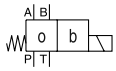 Operated in position “b“.	2 positions. Spring offset in position “0“.
F	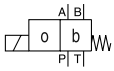 Spring offset in position “b“.	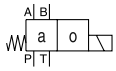 Spring offset in position “a“.	2 positions. Operated in position “0“.
K	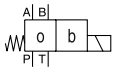 Operated in position “b“.	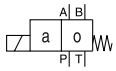 Operated in position “a“.	2 positions. Spring offset in position “0“.
M	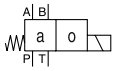 Spring offset in position “a“.	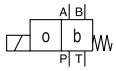 Spring offset in position “b“.	2 positions. Operated in position “0“.

2 position spools		
Code	Spool position	
B	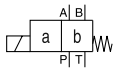	2 positions. Spring offset in position “b“. Operated in position “a“.
D	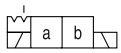	2 positions. Operated in position “a“ or “b“. No center or offset position.
H	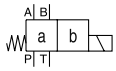	2 positions. Spring offset in position “a“. Operated in position “b“.

[1] Consider specific spool position.
[2] Please order plug separately.
[3] Only for voltage 24 V=.

Further spool types on request.

Ordering Code

Series D3MW

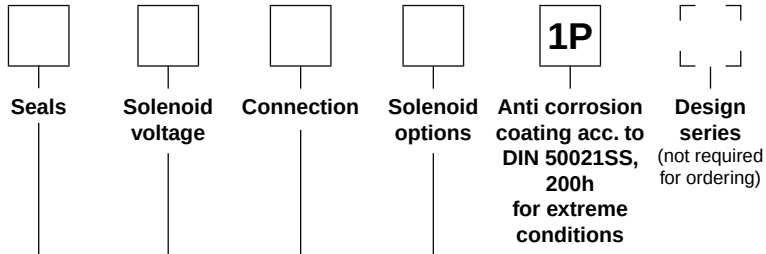

Code	Solenoid option
omit	manual override (Standard)
T	without manual override

Code	Connection
W [2)]	Connector as per EN 175301-803
A [2) 3)]	2-pin AMP Junior Timer
J [2) 3)]	Connector DT04-P2 “Deutsch“

Code	Voltage
K	12 V=
J	24 V=

Code	Seals
N	NBR
V	FPM

2

The flow curve diagram shows the flow versus pressure drop curves for all spool types. The relevant curve number for each spool type, operating position and flow direction is given in the table below.

	Position „b”		Position „a”		Position „0”					
Spool	P->A	B->T	P->B	A->T	P->A	P->B	A->T	B->T	P->T	A->B
001	6	5	6	6	–	–	–	–	–	–
002	3	5	3	3	1	1	4	5	1	6
004	5	4	4	4	–	–	8	8	–	9
006	1	2	1	3	2	2	–	–	–	3
011	2	2	2	2	–	–	10	10	–	10
020	6	6	5	7	–	–	–	–	–	–
030	4	5	3	5	–	–	–	–	–	–
	P->B	A->T	P->A	B->T	P->A	P->B	A->T	B->T	P->T	A->B
008	8	7	7	6	–	–	–	–	9	–

	Position „b”			Position „a”		
	P->A	P->B	A->B	P->B	A->T	
021	2	4	8	3	2	
	P->A	B->T		P->A	P->B	A->B
022	3	2		3	2	8

Flow curve diagram

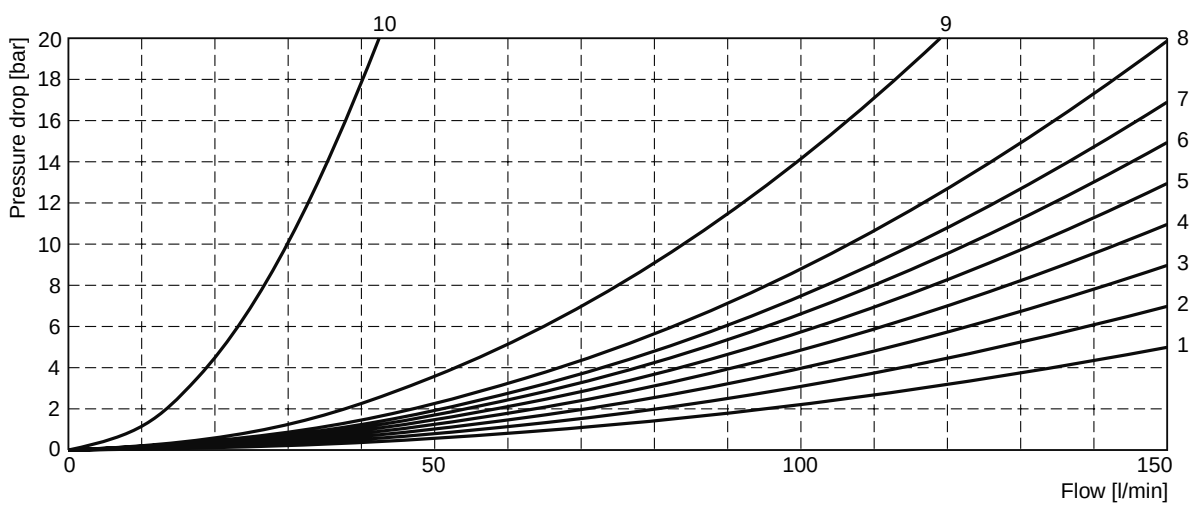

All characteristic curves measured with HLP46 at 50 °C.

The diagram below specifies the shift limits for valves with DC solenoids. Valves with spool position “F” or “M” can only be operated up to 70 % of the limits. The specifications apply to a viscosity of 40 mm^2/s and balanced flow conditions. The shift limits can be considerably lower at unbalanced flow conditions. To avoid flow rates beyond the shift limits, a plug-in orifice can be inserted in the P-port.

Shift limits, DC voltage

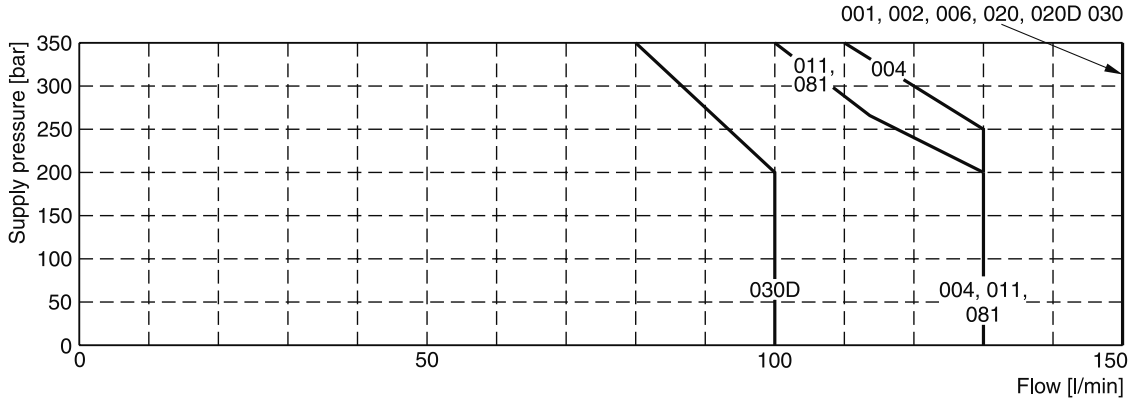

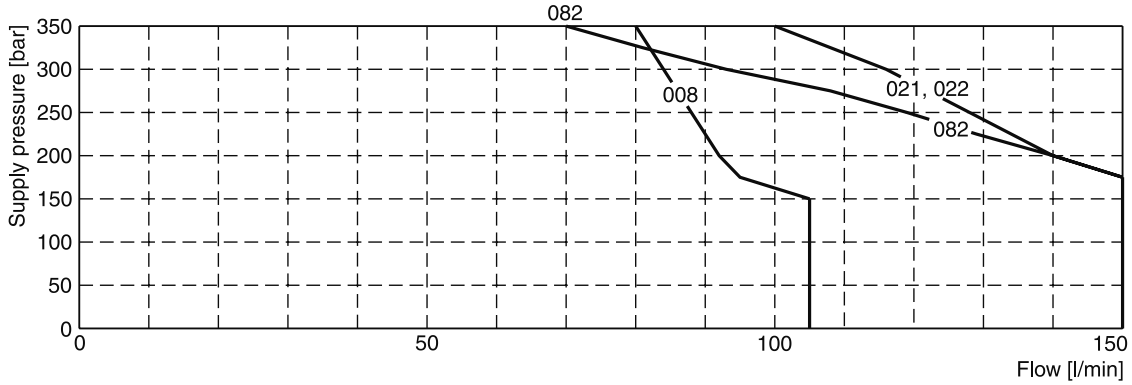

Measured with HLP46 at 50 °C, 90 % U_{nom} and warm solenoids.

2

Interface EN 175301-803

B, E, F -style

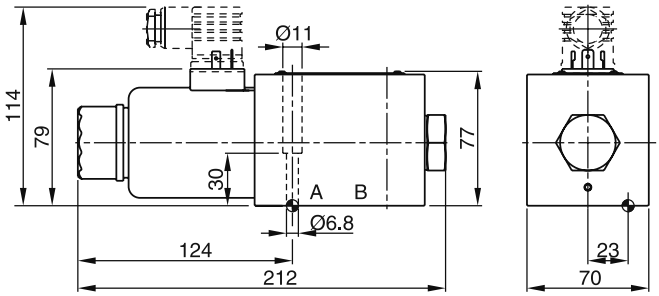

H, K, M -style

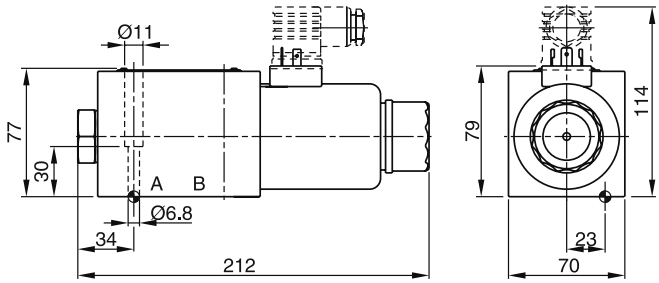

C, D -style

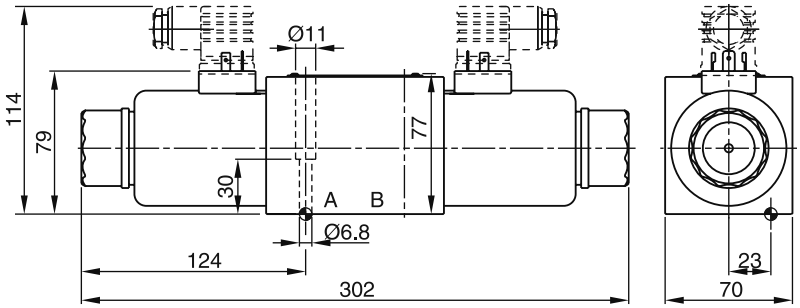

Dimensions with AMP Connector (only C and D -style shown)

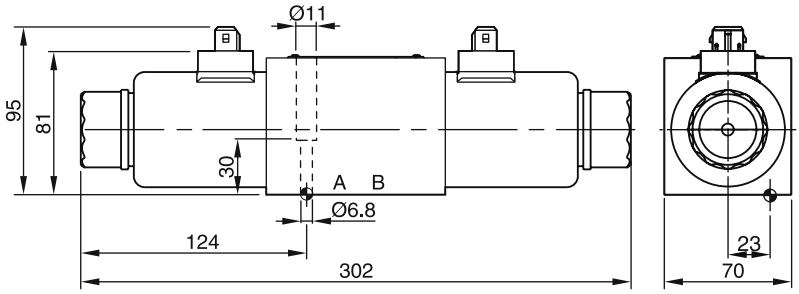

Dimensions with DT04-P2 “Deutsch“ Connector (only C and D -style shown)

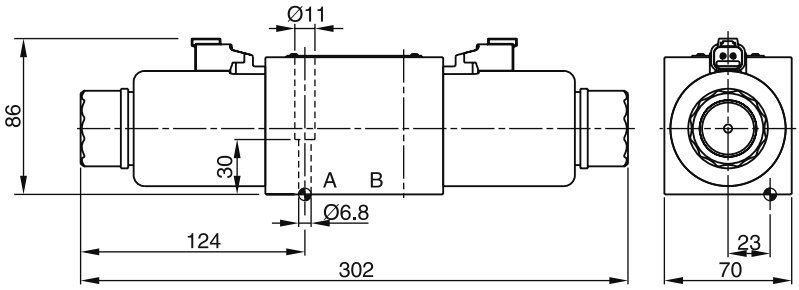

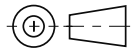

Surface finish	Kit			Kit
R_{max}6.3 ⏥ 0.01/100	BK385	4x M6x40 ISO 4762-12.9	13.2 Nm ±15 %	**NBR: SK-D3W-N-30** FPM: SK-D3W-V-30

The space necessary to remove the plug per EN 175301-803, design type AF is at least 15 mm.
The torque for the screw M3 of the plug has to be 0.5 to 0.6 Nm.

D3MW UK.indd RH 17.04.2015

The pilot operated valves are available in 4 sizes:

D31DW	NG10 (standard)
D31NW	NG10 (high flow)
D41VW	NG16
D81VW	NG25 (for port diameter up to 26 mm)
D91VW	NG25 (for port diameter up to 32 mm)
D111VW	NG32

All valves are piloted by a D1VW valve. Please see the separate ordering code for valves with position control.

The minimum pilot pressure must be ensured for all operating conditions of the directional valve.

Additionally spools with a P to T connection in the de-energized position need an external pressure supply (external inlet) or an integral check valve.

Valves with explosion proof solenoids Ex e mb II see catalogue HY11-3343.

Download: www.parker.com/euro_hcd - see “Literature”

D31DW

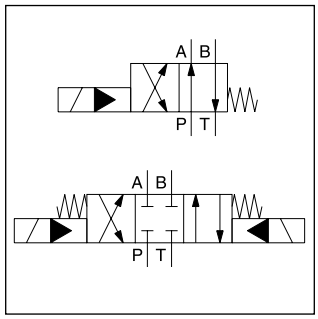

D31NW

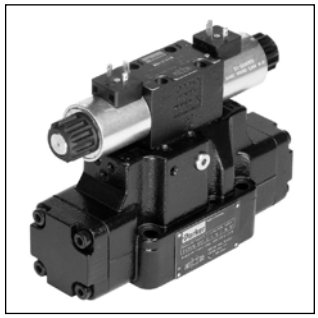
D41VW

D81VW

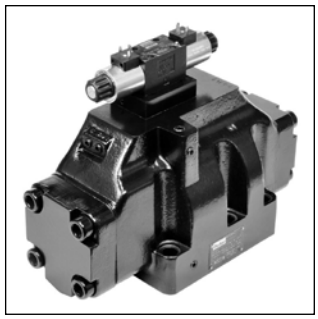
D111VW

D81VW

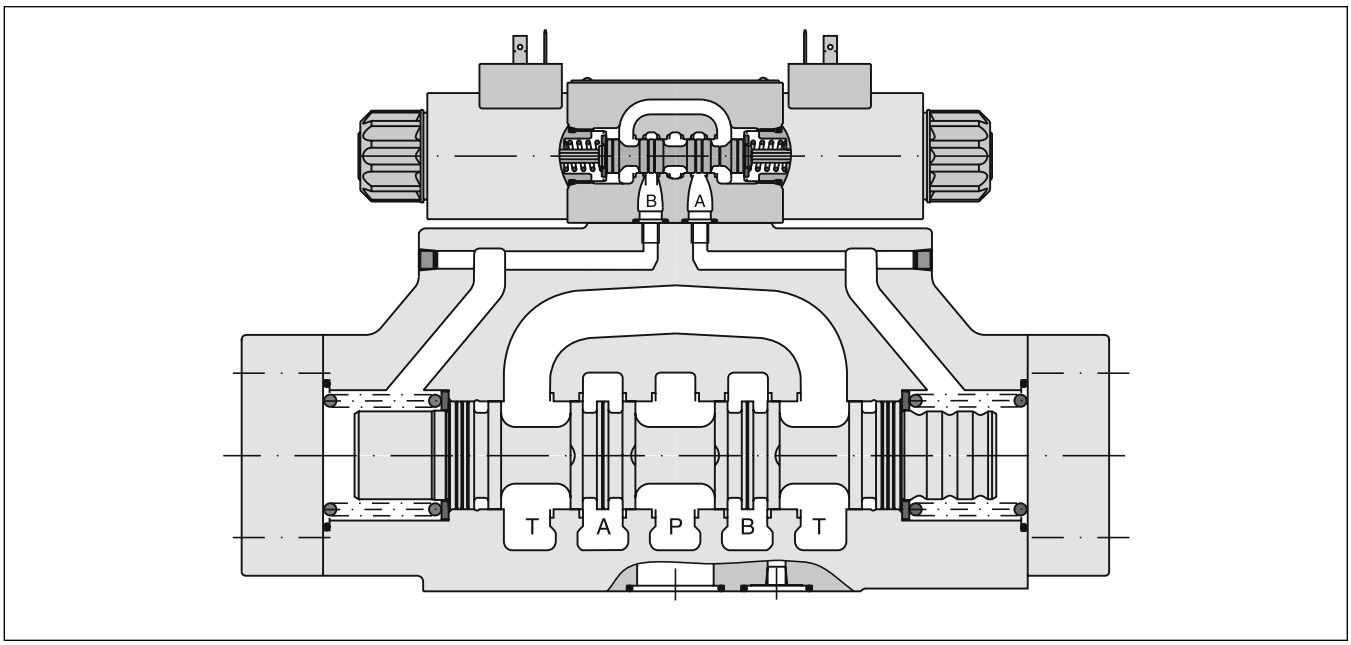

2

Code	Bore	Size	Feature
D31DW	Ø11 mm	NG10	
D31NW	Ø11 mm	NG10	High flow
D41VW	Ø20 mm	NG16	
D81VW	Ø26 mm	NG25	
D91VW	Ø32 mm	NG25	High flow
D111VW	Ø50 mm	NG32	

3 position spools		D31D	D31N	D41	D81/91	D111
Code	Spool type					
	a 0 b					
001	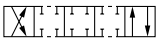	•	•	•	•	•
002	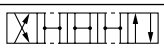	•	•	•	•	•
003		•	•	•	•	
004	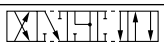	•	•	•	•	•
005	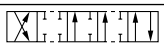	•	•	•	•	
006		•	•	•	•	
007	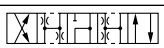	•		•	•	
009[1]	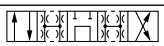	•	•	•	•	•
011	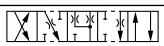	•	•	•	•	
014		•		•	•	
015	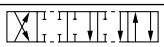	•	•	•	•	
016		•	•	•	•	
021		•	•	•	•	
022	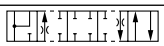	•	•	•	•	
031		•			•	
032	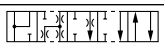	•			•	
054	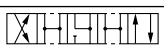			•	•	•
081	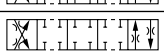	•	•	•	•	•
082	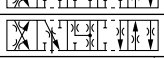	•		•	•	•

2 position spools						
Code	Spool type					
	a b					
020	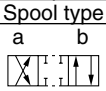	•	•	•	•	•
026		•		•	•	
030		•	•	•	•	•

Series | Spool type | Spool position

3 position spools			
Code	Spool position		
C	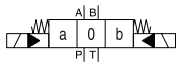		**3 positions. Spring offset in position “0“. Operated in position “a“ or “b“.**
	Standard	Spool type 009	
E	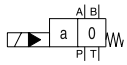 Operated in position “a“.	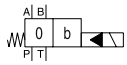 Operated in position “b“.	2 positions. Spring offset in position “0“.
F	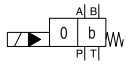 Spring offset in position “b“.	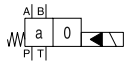 Spring offset in position “a“.	2 positions. Operated in position “0“.
K	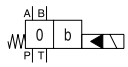 Operated in position “b“.	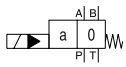 Operated in position “a“.	2 positions. Spring offset in position “0“.
M	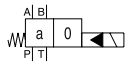 Spring offset in position “a“.	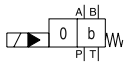 Spring offset in position “b“.	2 positions. Operated in position “0“.
R [2]	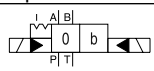 No center in offset position.	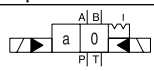 No center in offset position.	2 positions, detent. Operated in position “0“ or “b“.
S [2]	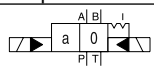 No center in offset position.	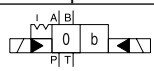 No center in offset position.	2 positions, detent. Operated in position “0“ or “a“. No center in offset position.

2 position spools		
Code	Spool position	
B	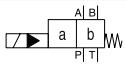	**Spring offset in position “b“. Operated in position “a“.**
D [2]	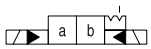	Detent, operated in position “a“ or “b“. No center or offset position.
H	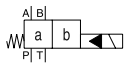	Spring offset in position “a“. Operated in position “b“.

[1] Consider specific spool position.
[2] For D31NW and D111VW only pilot valve with detent available.
[3] Not for D31DW, D91VW and D111VW available.
[4] Not for spools 002, 007, 009, 014, 030, 031, 032, 054 available.
[5] To be used in combination with rectifier plugs at 120 VAC / 230 VAC power supply.
[6] Only D31, D41, D81, D91 available.

Pilot oil supply and drain options	Seals	Solenoid voltage	Connector as per EN 175301-803, without plug (Please order plug separately)	Solenoid options	Acces-sories	Design series (not required for ordering)
			W			

Code	Accessories
omit	**Standard valve w/o accessories**
3A	Pilot choke, meter-out
3B	Pilot choke, meter-in
3C	Pilot with pressure reducing valve
3D [6]	Stroke adjustment side B
3E [6]	Stroke adjustment side A
3F [6]	Stroke adjustment side A and B
3R	meter-out + pressure reducing valve
1T	meter-in + pressure reducing valve

Code	Solenoid option
omit	**manual override (Standard)**
T	without manual override

Code	Solenoid voltage
K	12 V =
J	**24 V =**
U [5]	98 V =
G [5]	205 V =
Y	110 V 50 Hz / 120 V 60 Hz
T	230 V 50 Hz / 240 V 60 Hz

Code	Seals
N	**NBR**
V	FPM

Code	Inlet	Outlet
1	**Internal**	**External**
2	External	External
3 [3]	Integral check valve	External
4 [4]	**Internal**	**Internal**
5	External	Internal
6 [3]	Integral check valve	Internal

Bold letters =
Short-term availability

Further spool types and solenoid voltages on request.
Explosion proof solenoids Ex e mb II see catalogue HY11-3343.
Download:
www.parker.com/euro_hcd - see “Literature”

D3-D11 UK.indd RH 10.11.2015

2

Series	Spool type	Spool position

Code	Bore	Size	Feature
D31DW	Ø11 mm	NG10	
D31NW	Ø11 mm	NG10	High flow
D41VW	Ø20 mm	NG16	
D81VW	Ø26 mm	NG25	
D91VW	Ø32 mm	NG25	High flow
D111VW	Ø50 mm	NG32	

3 position spools		D31D	D31N	D41	D81/91	D111
Code	Spool type					
	a 0 b					
001	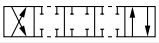	•	•	•	•	•
002	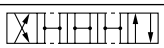	•	•	•	•	•
003		•	•	•	•	
004	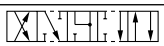	•	•	•	•	•
005	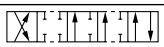		•	•	•	
006			•	•	•	
007	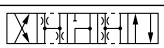			•	•	
009[1)]	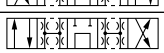	•	•	•	•	•
011	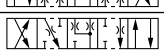	•	•	•	•	
014				•	•	
015	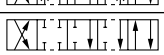	•	•	•	•	
016			•	•	•	
021		•	•	•	•	
022	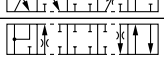	•	•	•	•	
031					•	
032					•	
054				•	•	•
081	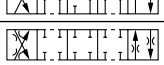			•	•	•
082	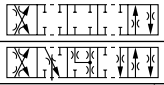			•	•	•

2 position spools						
Code	Spool type					
	a b					
020	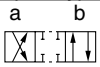	•	•	•	•	•
026		•		•	•	
030		•	•	•	•	•

3 position spools			
Code	Spool position		
C	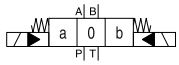		3 positions. Spring offset in position “0“. Operated in position “a“ or “b“.
	Standard	Spool type 009	
E	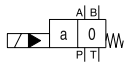 Operated in position “a“.	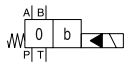 Operated in position “b“.	2 positions. Spring offset in position “0“.
F [2)]	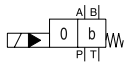 Spring offset in position “b“.	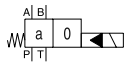 Spring offset in position “a“.	2 positions. Operated in position “0“.
K	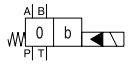 Operated in position “b“.	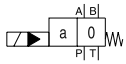 Operated in position “a“.	2 positions. Spring offset in position “0“.
M [2)]	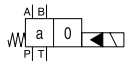 Spring offset in position “a“.	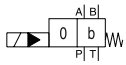 Spring offset in position “b“.	2 positions. Operated in position “0“.

2 position spools		
Code	Spool position	
B	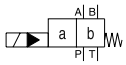	Spring offset in position “b“. Operated in position “a“.
H	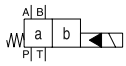	Spring offset in position “a“. Operated in position “b“.

Attention:

The adjustment of the position control is factory set and sealed.
Replacement and repairs can only be undertaken by the manufacturer.

D3-D11 UK.indd RH 10.11.2015

Pilot oil supply and drain options	Seals	Solenoid voltage	Connector as per EN 175301-803, without plug (Please order plug separately)	Solenoid options	Acces-sories	Design series (not required for ordering)
			W			

Code	Spool position	Position control
I3N [7]	C	End position monitored, side A and B
I6N [7]		Start position monitored, side A and B
I2N [7]	C, B, E, F (all spools) C, K, M (spool 009)	End position monitored, side B
I5N [7]		Start position monitored, side B
I1N [7]	C, H, K, M (all spools) C, E, F (spool 009)	End position monitored, side A
I4N [7]		Start position monitored, side A

Code	Solenoid option
omit	manual override (Standard)
T [6]	without manual override

Code	Solenoid voltage
K	12 V =
J	24 V =
U [5]	98 V =
G [5]	205 V =

Code	Seals
N	NBR
V	FPM

Code	Inlet	Outlet
1	Internal	External
2	External	External
3 [3]	Integral check valve	External
4 [4]	Internal	Internal
5	External	Internal
6 [3]	Integral check valve	Internal

[1] Consider specific spool position.
[2] Not for D31NW.
[3] Not for D31DW, D91VW and D111VW available.
[4] Not for spools 002, 007, 009, 014, 030 available.
[5] To be used in combination with rectifier plugs at 120 VAC / 230 VAC power supply.
[6] For hydraulic presses according to the safety regulations EN 693, solenoid option “T“ (without manual override) and accessories “I4N“, “I5N“ or “I6N“ (start position monitored) are required.
[7] Please order female connector M12x1 separately (see accessories, female connector M12x1 (order no.: 5004109). The monitor switch has to be located on the side to which the spool moves from the spring offset position. For 4/3-way valves two switches are required.

2

General						
Design		Directional spool valve				
Actuation		Solenoid				
Series		D31DW	D31NW	D41VW	D81/91VW	D111VW
Size		NG10	NG10	NG16	NG25	NG32
Weight (1/ 2 solenoids)	[kg]	6.0 / 6.6	7.6 / 8.1	9.7 / 10.3	17.9 / 18.6	67.4 / 68.0
Mounting interface		DIN 24340 A10	DIN 24340 A10	DIN 24340 A16	DIN 24340 A25	DIN 24340 A32
		ISO 4401	ISO 4401	ISO 4401	ISO 4401	ISO 4401
		NFPA D05	NFPA D05	NFPA D07	NFPA D08	NFPA D10
		CETOP RP 121-H				
Mounting position		unrestricted, preferably horizontal				
Ambient temperature	[°C]	-25...+60 (without inductive position control)				
	[°C]	0...+60 (with inductive position control)				
$MTTF_D$ value	[years]	75				
Hydraulic						
Max. operating pressure	[bar]	Pilot drain internal: P, A B, X: 350; T, Y: 105				
	[bar]	Pilot drain external: P, A B, T, X: 350; Y: 105				
Fluid		Hydraulic oil according to DIN 51524				
Fluid temperature	[°C]	-20 ... +70 (NBR: -25...+70), (without inductive position control)				
	[°C]	0...+70 (with inductive position control)				
Viscosity permitted	[cSt] / [mm²/s]	2.8...400				
Viscosity recommended	[cSt] / [mm²/s]	30...80				
Filtration		ISO 4406 (1999); 18/16/13				
Flow max.	[l/min]	150	170	300	700	2000
Leakage at 350 bar (per flow path)	[ml/min]	up to 100*	72...422*	up to 200*	up to 800*	up to 5000*
*depending on spool						
Opening pressure integral check valve	[bar]	n.a.	see p/Q diagram	see p/Q diagram	see p/Q diagram	n.a.
Minimum pilot supply pressure	[bar]	5	7	5		
Static / Dynamic						
Step response at 95 %	[ms]	Energized / De-energized				
DC solenoids Pilot pressure	50 bar	60 / 40	50 / 60	95 / 65	150 / 170	470 / 390
	100 bar	55 / 40	50 / 60	75 / 65	110 / 170	320 / 390
	250 bar	55 / 40	50 / 50	60 / 65	90 / 170	210 / 390
	350 bar	55 / 40	50 / 50	60 / 65	85 / 170	200 / 390
AC solenoids Pilot pressure	50 bar	40 / 30	30 / 50	75 / 55	130 / 155	450 / 375
	100 bar	35 / 30	30 / 50	65 / 55	90 / 155	300 / 375
	250 bar	35 / 30	30 / 50	40 / 55	70 / 155	190 / 375
	350 bar	35 / 30	30 / 50	40 / 55	65 / 155	180 / 375
Electrical characteristics						
Duty ratio		100 % ED; CAUTION: coil temperature up to 150 °C possible				
Protection class		IP65 in accordance with EN 60529 (with correctly mounted plug-in connector)				
	Code	K	J	U	G	Y	T
Supply voltage / ripple	[V]	12 V =	24 V =	98 V =	205 V =	110 V at 50 Hz/ 120 V at 60 Hz	230 V at 50 Hz/ 240 V at 60 Hz
Tolerance supply voltage	[%]	±10	±10	±10	±10	±5	±5
Current consumption hold	[A]	2.72	1.29	0.33	0.13	0.58 / 0.49	0.31 / 0.26
Current consumption in rush	[A]	2.72	1.29	0.33	0.13	2.1 / 2.0	1.05 / 1.0
Power consumption hold		32.7 W	31 W	31.9 W	28.2 W	64 / 59 VA	68 / 62 VA
Power consumption in rush		32.7 W	31 W	31.9 W	28.2 W	231 / 240 VA	231 / 240 VA
Solenoid connection		Connector as per EN 175301-803, solenoid identification as per ISO 9461.					
Wiring min.	[mm²]	3 x 1.5 recommended					
Wiring length max.	[m]	50 recommended					

With electrical connections the protective conductor (PE ⏚) must be connected according to the relevant regulations.

Electrical characteristics of position control as per IEC 61076-2-101 (M12x1), NG16/NG25/NG32

Supply voltage	[VDC]	24
Tolernace supply voltage	[%]	±20
Ripple supply voltage	[%]	≤10
Polarity protection	[V]	300
Current consumption without load	[mA]	≤20
Switching hysteresis	[mm]	<0.06
Max. output current per channel, ohmic	[mA]	250
Ambient temperature	[°C]	-20 … +60
Protection		IP65 acc. EN 60529 (with correctly mounted plug-in connector)
Min. distance to next AC solenoid	[m]	0.1
Interface		M12x1 to IEC 61076-2-101
CE conform		EN 61000-4-2 / EN 61000-4-4 / EN 61000-4-6 [1] / ENV 50140 / ENV 50204

M12 pin assignment

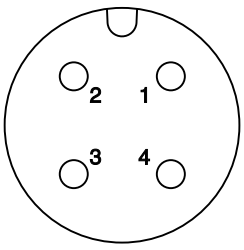

1 + US 19.2...28.8 V
2 Out B: normally open
3 0 V
4 Out A. normally closed

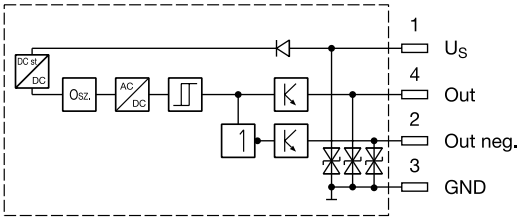

Outputs: Open collector

Definitions

Start position monitored:

The valve is de-energized. The inductive switch gives a signal at the moment when the spool leaves the spring offset position (below 15 % spool stroke).
At the switching point the spool is located within the closed position. It is secured that only the flow paths of the offset position are granted.

End position monitored:

The inductive switch gives a signal before the end position is reached (above 85 % spool stroke).

Please order plug M12x1 separately (see accessories, plug M12x1; order no.: 5004109).

[1] Only guaranted with screened cable and female connector

2

The flow curve diagrams show the flow versus pressure drop curves for all spool types. The relevant curve number for each spool type, operating position and flow direction is given in the tables below.

D31DW and D31NW

Spool Code	Curve number									
	P-A		P-B		P-T		A-T		B-T	
	*DW	*NW	*DW	*NW	*DW	*NW	*DW	*NW	*DW	*NW
001	4	3	4	3	–	–	3	2	3	5
002	2	3	3	3	3	7	3	4	4	3
003	2	2	4	3	–	–	1	4	2	4
004	4	2	3	3	–	–	2	4	3	4
005	1	2	4	4	–	–	2	1	3	4
006	2	8	3	9	–	–	3	7	4	9
007	4	–	2	–	5	–	2	–	2	–
009	2	4	2	6	8	6	5	4	6	10
011	3	3	2	3	–	–	3	2	3	4
014	2	–	4	–	5	–	2	–	3	–
015	4	2	2	2	–	–	2	1	2	4
016	4	4	1	3	–	–	1	2	2	4
020	4	6	4	4	–	–	4	3	4	6
021	3	–	4	7	–	–	2	8	–	–
022	5	4	2	–	–	–	–	9	4	–
026	3	–	3	–	–	–	–	–	–	–
030	4	5	3	3	–	–	3	2	3	5
031	3	–	4	–	–	–	1	–	–	–
032	5	–	2	–	–	–	–	–	2	–
081	6	–	6	–	–	–	7	–	7	–
082	7	–	6	–	–	–	5	–	7	–

D31DW

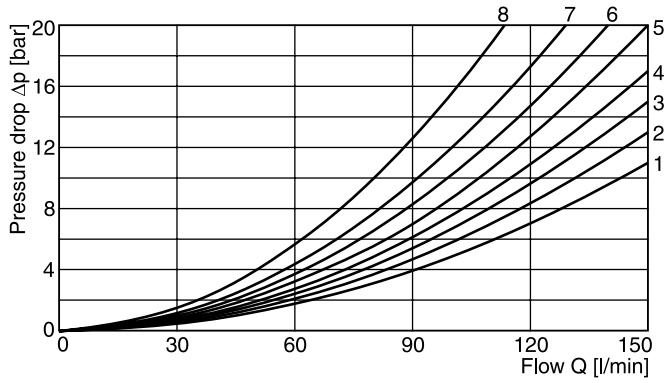

D31NW

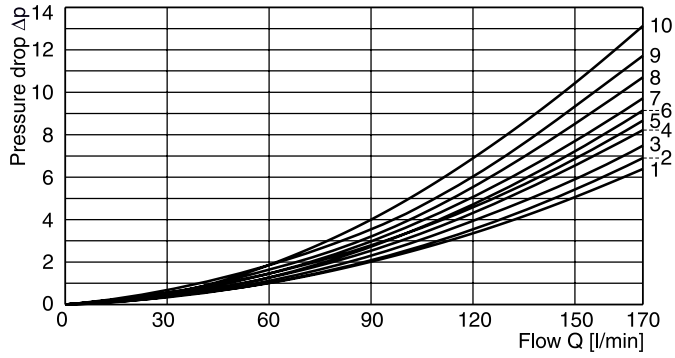

D41VW

Spool Code	Curve number				
	P-A	P-B	P-T	A-T	B-T
001	1	1	–	4	5
002	1	2	6	4	6
003	1	2	–	5	6
004	1	1	–	5	5
005	2	2	–	3	5
006	1	2	–	3	6
007	1	1	6	4	5
009	2	9	8	7	10
011	1	1	–	4	5
014	1	1	6	4	5
015	1	2	–	4	6
016	2	2	–	3	5
020	3	5	–	3	5
021	2	8	–	2	–
022	8	2	–	–	3
026	3	5	–	–	–
030	2	3	–	6	7
031	–	–	–	–	–
032	–	–	–	–	–
054	2	3	–	6	7
081	–	–	–	–	–
082	–	–	–	–	–

D41VW

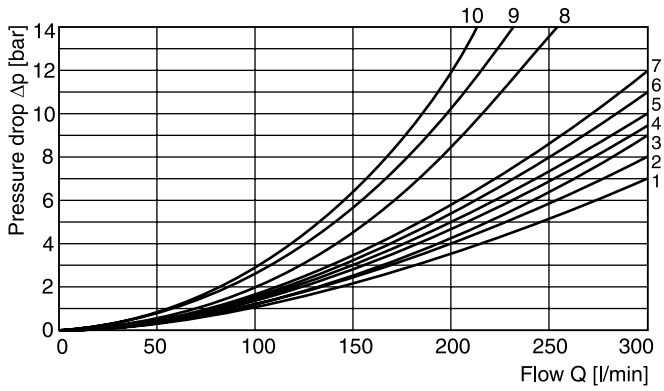

All characteristic curves measured with HLP46 at 50 °C.

D81/D91VW and D111VW

Spool Code	Curve number									
	P-A		P-B		P-T		A-T		B-T	
	D8/9	D11	D8/9	D11	D8/9	D11	D8/9	D11	D8/9	D11
001	3	5	2	5	–	–	3	4	5	1
002	2	5	1	5	1	5	3	4	5	1
003	4	–	2	–	–	–	3	–	6	–
004	4	5	3	5	–	–	3	4	5	1
005	1	–	2	–	–	–	4	–	5	–
006	2	–	2	–	–	–	4	–	6	–
007	3	–	1	–	7	–	3	–	5	–
009	4	3	8	3	9	2	4	3	10	1
011	3	–	2	–	–	–	3	–	5	–
014	1	–	2	–	8	–	3	–	5	–
015	3	–	3	–	–	–	4	–	5	–
016	3	–	3	–	–	–	4	–	5	–
020	6	5	5	5	–	–	6	3	8	1
021	5	–	10	–	–	–	3	–	–	–
022	10	–	5	–	–	–	–	–	5	–
026	6	–	5	–	–	–	–	–	–	–
030	3	5	2	5	–	–	3	4	5	1
054	4	5	3	5	–	–	3	4	5	1

D81/D91VW

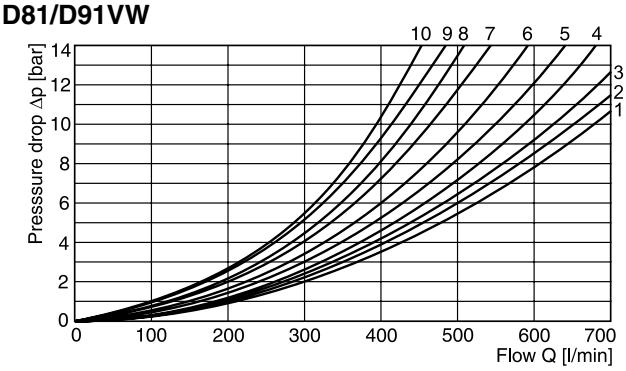

D111VW

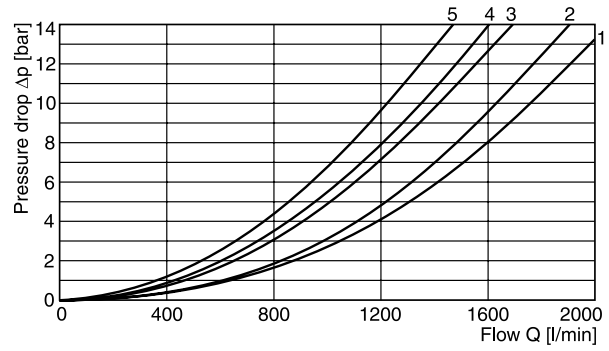

Integral check valve in the P port

Mounting an integral check valve in the P port is necessary to build up pilot pressure for valves with P to T connection and internal pilot oil supply. The pressure difference at the integral check valve (see performance curves) is to be added to all flow curves of the P-port of the main valve. Directional valves with an integral check valve are available for the series D31NW, D41VW and D81VW.

Flow curve D31NW

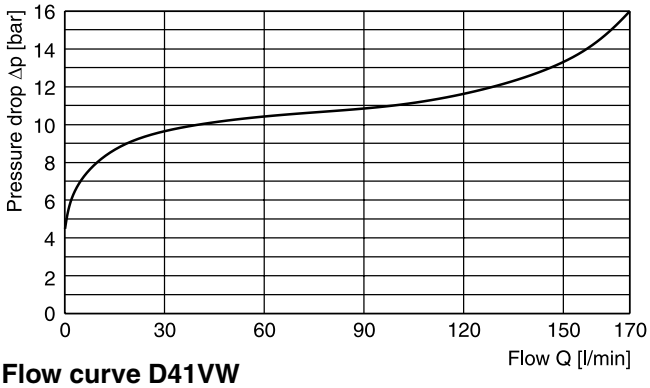

Flow curve D41VW

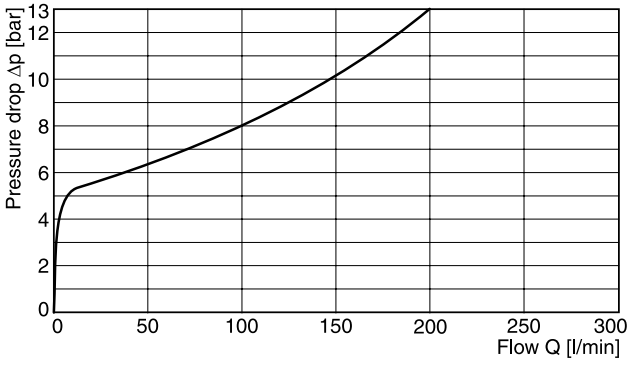

Flow curve D81VW

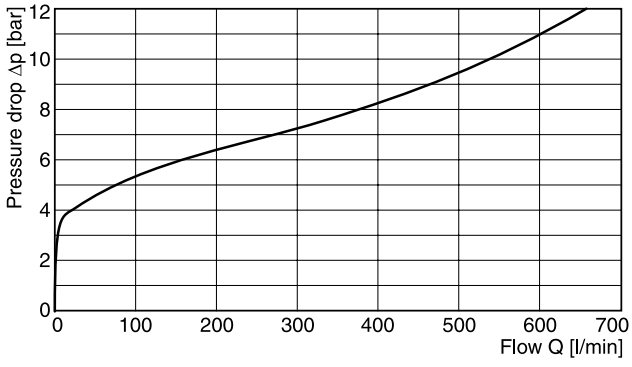

All characteristic curves measured with HLP46 at 50 °C.

2

D31DW

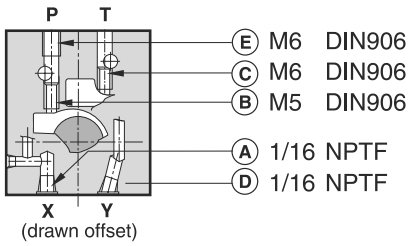

○ open, ● closed

Pilot oil Inlet	Pilot oil Outlet	A	B	C	D	E
internal	external	●	○	●	○	Orifice Ø1.2
external	external	○	●	●	○	Orifice Ø1.2
internal	internal	●	○	○	●	Orifice Ø1.2
external	internal	○	●	○	●	Orifice Ø1.2

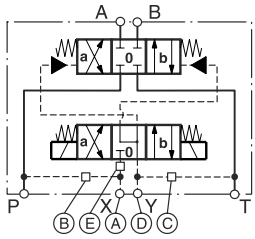

D31NW

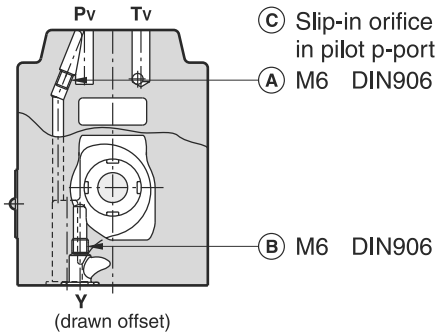

○ open, ● closed

Pilot oil Inlet	Pilot oil Outlet	A	B	C
internal	external	○	●	Orifice Ø1.0
external	external	●	●	Orifice Ø1.0
internal	internal	○	○	Orifice Ø1.0
external	internal	●	○	Orifice Ø1.0

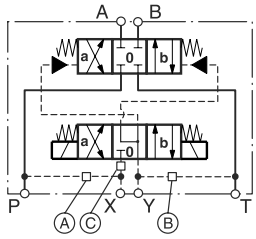

D41VW

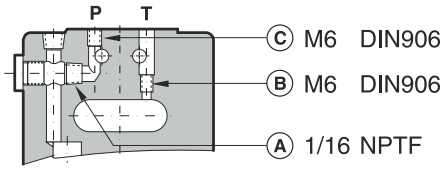

○ open, ● closed

Pilot oil Inlet	Pilot oil Outlet	A	B	C
internal	external	○	●	Orifice Ø1.5
external	external	●	●	Orifice Ø1.5
internal	internal	○	○	Orifice Ø1.5
external	internal	●	○	Orifice Ø1.5

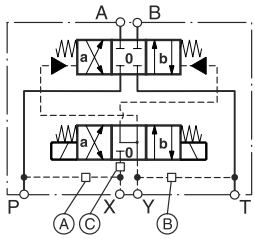

D81/91VW

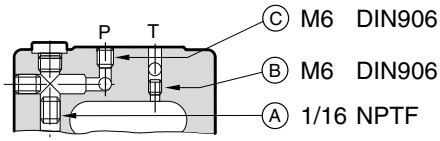

○ open, ● closed

Pilot oil Inlet	Pilot oil Outlet	A	B	C
internal	external	○	●	Orifice Ø1.5
external	external	●	●	Orifice Ø1.5
internal	internal	○	○	Orifice Ø1.5
external	internal	●	○	Orifice Ø1.5

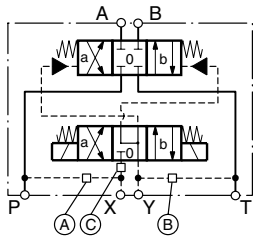

D111VW

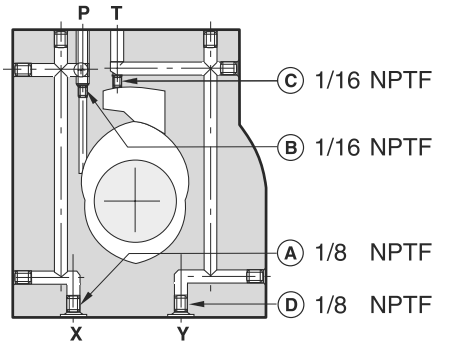

○ open, ● closed

Pilot oil Inlet	Pilot oil Outlet	A	B	C	D
internal	external	○	Orifice Ø1.5	●	○
external	external	Orifice Ø1.5	●	●	○
internal	internal	○	Orifice Ø1.5	○	○
external	internal	Orifice Ø1.5	●	○	○

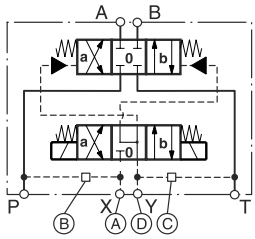

All orifice sizes for standard valves.

D3-D11 UK.indd RH 10.11.2015

D31DW

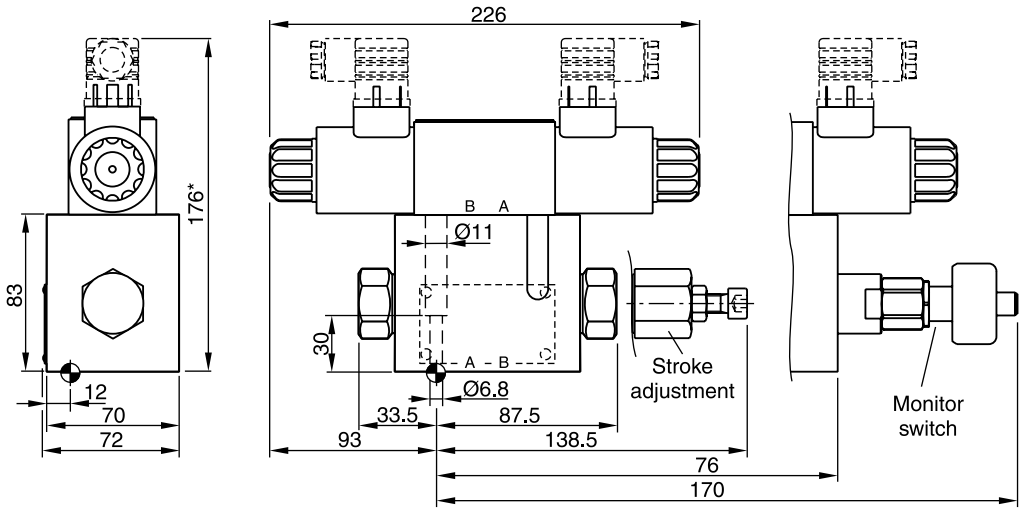

Surface finish	Kit			Kit
R_{max}6.3 ▱ 0.01/100	BK385	4x M6x40 ISO 4762-12.9	13.2 Nm ±15 %	**NBR: SK-D31DW-N-91** FPM: SK-D31DW-V-91

D31NW

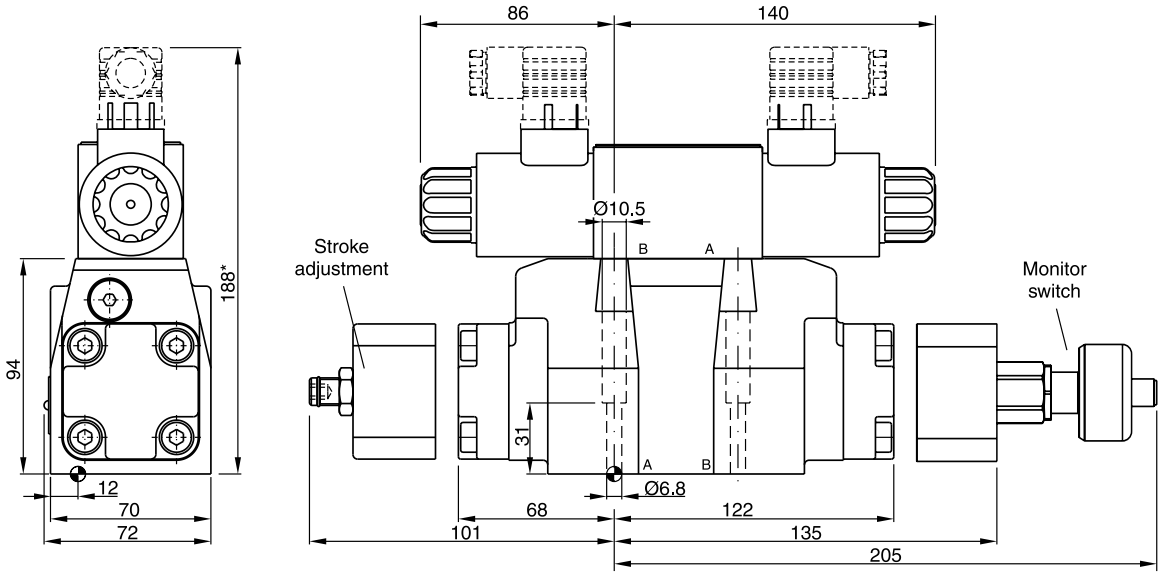

Surface finish	Kit			Kit
R_{max}6.3 ▱ 0.01/100	BK385	4x M6x40 ISO 4762-12.9	13.2 Nm ±15 %	**NBR: SK-D31NW-N-91** FPM: SK-D31NW-V-91

The space necessary to remove the plug per EN 175301-803, design type AF is at least 15 mm.
The torque for the screw M3 of the plug has to be 0.5 to 0.6 Nm.

* Please add for each sandwich plate +40 mm (pressure reducing valve, choke valve meter-in/-out).

2

D41VW

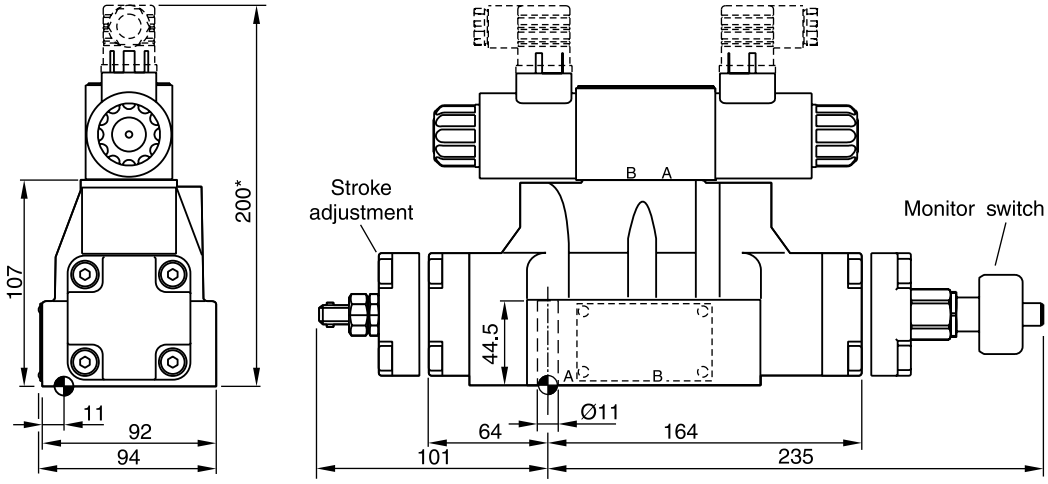

Surface finish	Kit			Kit
R_{max}6.3 / 0.01/100	BK320	4x M10x60 2x M6x55 ISO 4762-12.9	63 Nm ±15 % 13.2 Nm ±15 %	**NBR: SK-D41VW-N-91** FPM: SK-D41VW-V-91

D81VW, D91VW

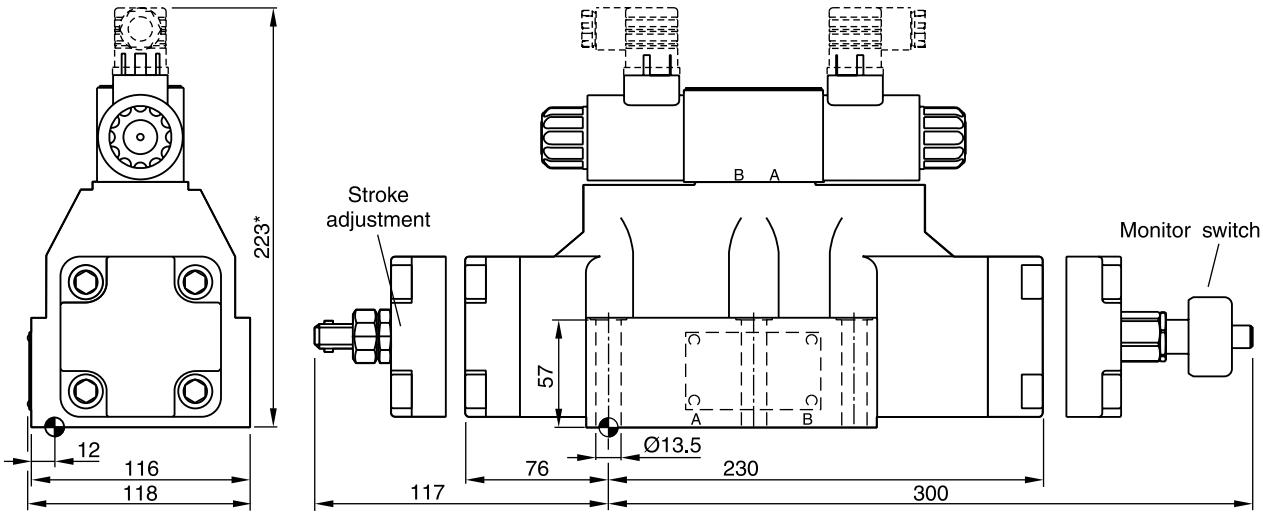

Surface finish	Kit			Kit
R_{max}6.3 / 0.01/100	BK360	6x M12x75 ISO 4762-12.9	108 Nm ±15 %	**NBR: SK-D81VW-N-91 / SK-D91VW-N-91** FPM: SK-D81VW-V-91 / SK-D91VW-V-91

The space necessary to remove the plug per EN 175301-803, design type AF is at least 15 mm.
The torque for the screw M3 of the plug has to be 0.5 to 0.6 Nm.

* Please add for each sandwich plate +40 mm (pressure reducing valve, choke valve meter-in/-out).

D3-D11 UK.indd RH 10.11.2015

D111VW

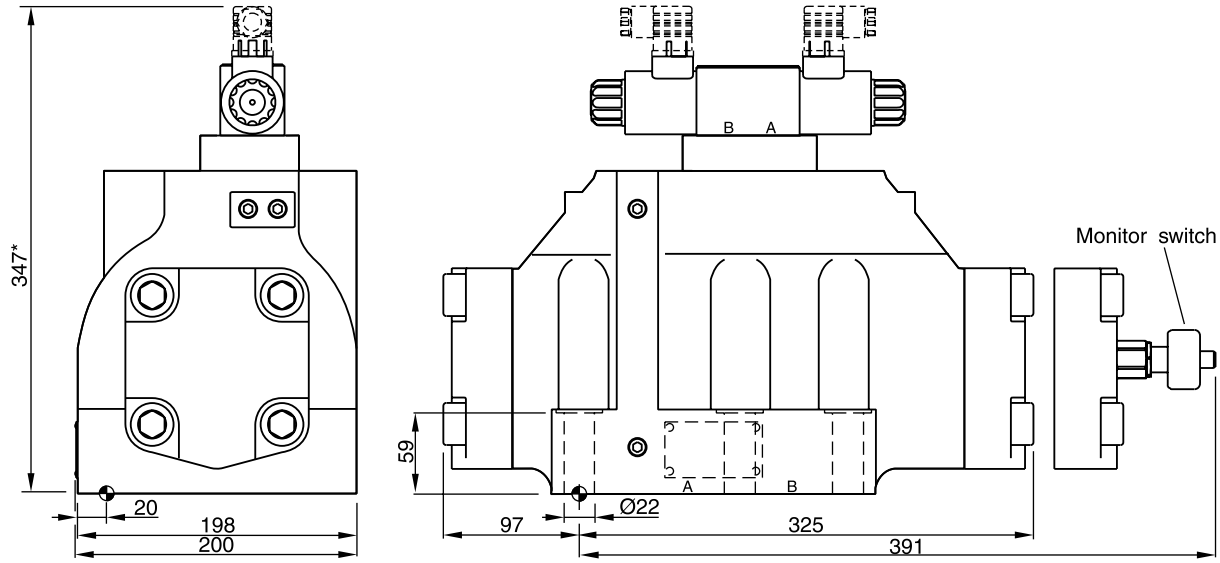

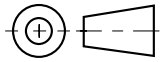

Surface finish	Kit			Kit
R_{max}6.3 ▱ 0.01/100	BK386	6x M20x90 ISO 4762-12.9	517 Nm ±15 %	**NBR: SK-D111VW-N-91** FPM: SK-D111VW-V-91

The space necessary to remove the plug as per EN 175301-803, design type AF is at least 15 mm.
The torque for the screw M3 of the plug has to be 0.5 to 0.6 Nm.

* Please add for each sandwich plate +40 mm (pressure reducing valve, choke valve meter-in/-out).

2

The series of regenerative and hybrid directional control valves are available in four sizes:

Direct operated valve:

D3DWR	NG10	Hybrid function with adaptor plate (see chapter 12)

Pilot operated valves:

D31NWR	NG10	Hybrid function with adaptor plate (see chapter 12)
D41VWR, D41VWZ	NG16	
D91VWR, D91VWZ	NG25	
D111VWR, D111VWZ	NG32	

The innovative integrated regenerative function in the A-line allows energy saving circuits with differential cylinders. The hybrid version can switch between regenerative mode and standard mode.

Features

- Energy saving A-regeneration
- Switchable hybrid version

Further literature about the opportunities of energy savings and more functional details of the integrated regeneration is available on request.

D41VWR

D41VWZ

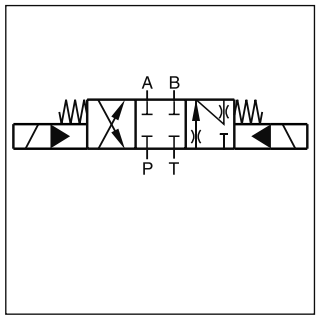

Regenerative D*1VWR

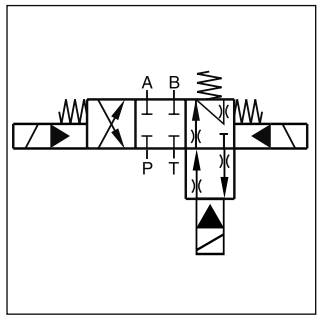

Hybrid D*1VWZ

Regenerative valve D*1VWR

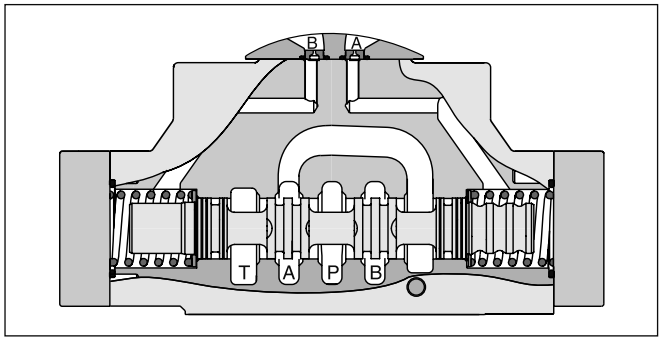

Hybrid valve D*1VWZ

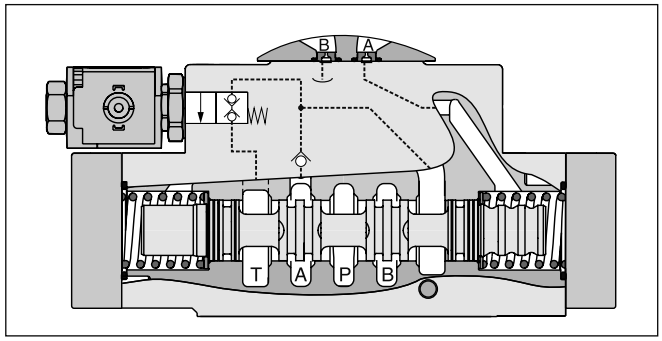

D*1VWR (regenerative valve)
Cylinder extending

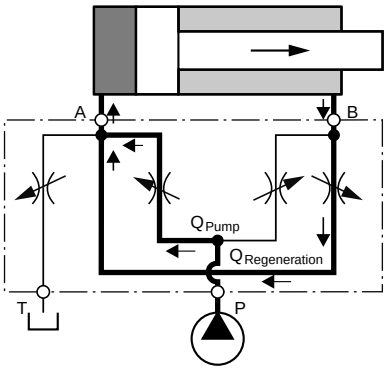

D*1VWZ (hybrid valve)
Cylinder extending
regenerative mode
(high speed)

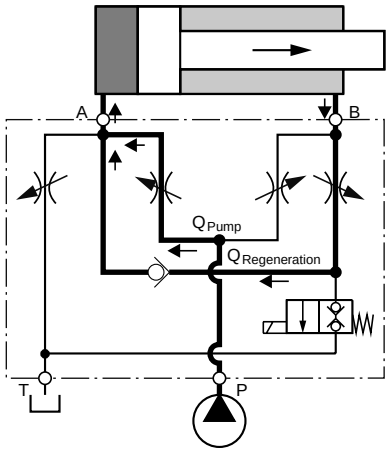

Cylinder extending
standard mode
(high force)

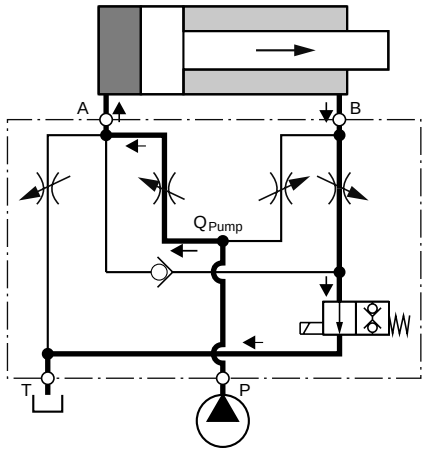

D3DWR

D3DW		C			J	W		
Direct operated valve NG10	**Spool type**	**3 spool position** Spring offset in position “0“. Operated in position “a“ or “b“.	**Drain port**	**Seals**	**Solenoid voltage 24 V =**	**Connector as per EN 175301-803, without con-nector** (Please order plug separately)	**Solenoid options**	**Design series** (not required for ordering)

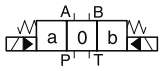

Regenerative function [1]	
Code	Spool type
R01	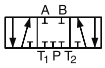
R04	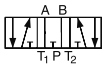
R81	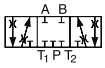
R82	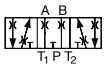

Code	Drain port
omit	Standard
9	for high pressure in the connection T1 (tank) or T2 (rege-nerative function) the connection X and Y can be used as drain port

Code	Solenoid option
omit	manual override (Standard)
T	without manual override

Code	Seals
N	NBR
V	FPM

[1] For regenerative and hybrid function please refer to solutions with sandwich- and adaptor plates "A10-1664 / A10-1665L / H10-1662 / H10-1666L" in chapter 12.

2

D31NWR, D*1VWR and D*1VWZ

		C			J	W			
Series	**Spool type**	**3 spool position** Spring offset in position “0“. Operated in position “a“ or “b“.	**Pilot oil supply and drain options**	**Seals**	**Solenoid voltage 24 V =**	**Connector as per EN 175301-803, without con-nector** (Please order plug separately)	**Solenoid options**	**Acces-sories**	**Design series** (not required for ordering)

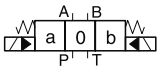

Code	Bore	Size
D31NW	Ø11 mm	NG10
D41VW	Ø20 mm	NG16
D91VW	Ø32 mm	NG25
D111VW	Ø50 mm	NG32

Regenerative function [2]	
Code	Spool type
R01	a 0 b 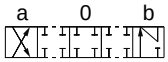
R04 [3]	
R54 [4]	
R81	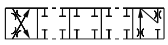
R82	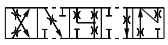

Hybrid function [1] [2]	
Code	Spool type
Z01	a 0 b 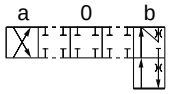
Z04 [3]	
Z54 [4]	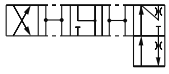
Z81	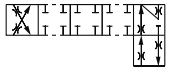
Z82	

Code	Inlet	Outlet
1	Internal	External
2	External	External
4	Internal	Internal
5	External	Internal

Code	Accessories
omit	Standard valve w/o accessories
3A	Pilot choke, meter-out
3B	Pilot choke, meter-in
3C	Pilot with pressure reducing valve
3D [3]	Stroke adjustment side B
3E [3]	Stroke adjustment side A
3F [3]	Stroke adjustment side A and B
3R	Meter-out + pressure reducing valve
1T	Meter-in + pressure reducing valve

Code	Solenoid option
omit	manual override (Standard)
T	without manual override

Code	Seals
N	NBR
V	FPM

[1] Not for D31NW.

[2] For regenerative and hybrid function for D31NW (NG10) please refer to solutions with sandwich- and adaptor plates "A10-1664 / A10-1665L / H10-1662 / H10-1666L" in chapter 12.

D31NW spool type: R01 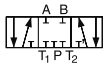 R04 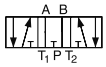

R81 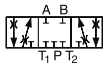 R82 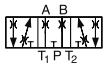

[3] Not for D111VW.

[4] Only for D111VW.

D3-D11 REG-HYB UK.indd RH 17.04.2015

General						
Design		Directional spool valve				
Actuation		Solenoid				
Series		**D3DWR**	**D31NWR**	**D41VW**	**D81/91VW**	**D111VW**
Size		NG10	NG10	NG16	NG25	NG32
Weight	[kg]	6.3	8.1	10.3	18.6	68.0
Mounting interface		DIN 24340 A10 ISO 4401 NFPA D05	DIN 24340 A10 ISO 4401 NFPA D05	DIN 24340 A16 ISO 4401 NFPA D07	DIN 24340 A25 ISO 4401 NFPA D08	DIN 24340 A32 ISO 4401 NFPA D10
		CETOP RP 121-H				
Mounting position		unrestricted, preferably horizontal				
Ambient temperature	[°C]	-25...+60				
$MTTF_D$ value	[years]	75 / 150 (D3DWR)				
Hydraulic						
Max. operating pressure	[bar]	D3DWR: P, A B: 350; T: 210; option 9 [1] : P, A, B, T: 350; X, Y: 210 Pilot drain internal: P, A B, X: 350; T, Y: 105 Pilot drain external: P, A B, T, X: 350; Y: 105				
Fluid		Hydraulic oil according to DIN 51524				
Fluid temperature	[°C]	-20 ... +70 (NBR: -25...+70)				
Viscosity permitted	[cSt] / [mm²/s]	2.8...400				
Viscosity recommended	[cSt] / [mm²/s]	30...80				
Filtration		ISO 4406 (1999); 18/16/13				
Flow max.	[l/min]	150	170	300	700	2000
Leakage at 350 bar (per flow path) *depending on spool	[ml/min]	up to 20* (at 50 bar)	72...422*	up to 200*	up to 800*	up to 5000*
Minimum pilot supply pressure	[bar]	—	7	5		
Static / Dynamic						
Step response at 95 %	[ms]	Energized / de-energized				
DC solenoids at 65 l/min	175 bar	105 / 85	—	—	—	—
DC solenoids Pilot pressure	50 bar	—	50 / 60	95 / 65	150 / 170	470 / 390
	100 bar	—	50 / 60	75 / 65	110 / 170	320 / 390
	250 bar	—	50 / 50	60 / 65	90 / 170	210 / 390
	350 bar	—	50 / 50	60 / 65	85 / 170	200 / 390
Electrical characteristics						
Duty ratio		100 % ED; CAUTION: coil temperature up to 150 °C possible				
Protection class		IP65 in accordance with EN 60529 (with correctly mounted plug-in connector)				
		D3DWR	D31NWR / D41VW / D91VW / D111VW			
Supply voltage / ripple	[V]	24 V =	24 V =			
Tolerance supply voltage	[%]	±10	±10			
Current consumption hold	[A]	1.5	1.29			
Current consumption in rush	[A]	1.5	1.29			
Power consumption hold	[W]	36	31			
Power consumption in rush	[W]	36	31			
Solenoid connection		Connector as per EN 175301-803, solenoid identification as per ISO 9461.				
Wiring min.	[mm²]	3 x 1.5 recommended				
Wiring length max.	[m]	50 recommended				

Electrical characteristics hybrid option

Duty ratio		100 %		
Protection class		IP65 in accordance with EN 60529 (with correctly mounted plug-in connector)		
		D41	D91	D111
Supply voltage	[V]	24	24	24
Tolernace supply voltage	[%]	±10	±10	±10
Current consumption	[A]	1.21	0.96	1.29
Power consumption	[W]	29	23	31
Solenoid connection		Connector as per EN 175301-803		
Wiring min.	[mm²]	3 x 1.5 recommended		
Wiring length max.	[m]	50 recommended		

With electrical connections the protective conductor (PE ⏚) must be connected according to the relevant regulations.

[1] Bolts are not designed for simultaneous loading of all ports with maximum pressure.
The total pressure profile has to be adapted to the tensile strength of the bolts.

2

D3DWR

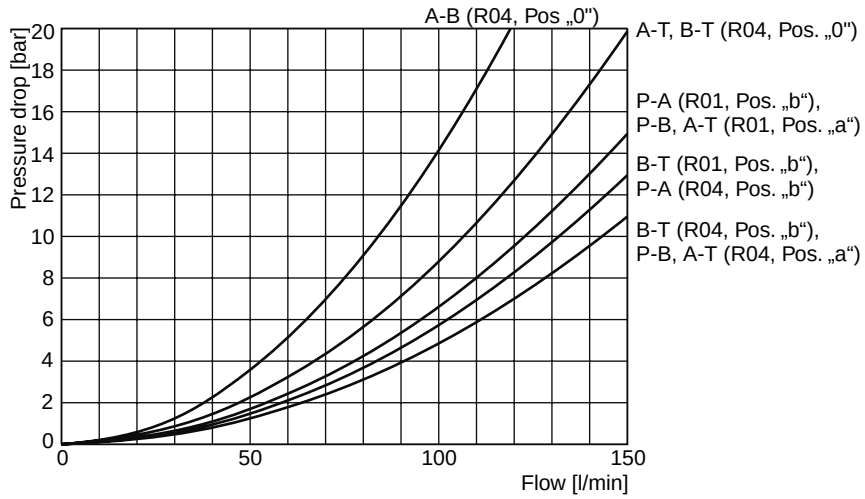

D31NWR

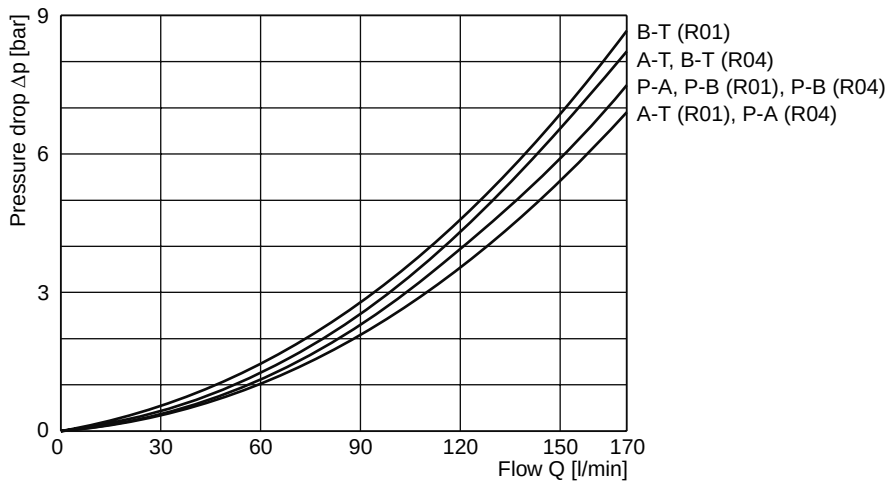

2

D41VW

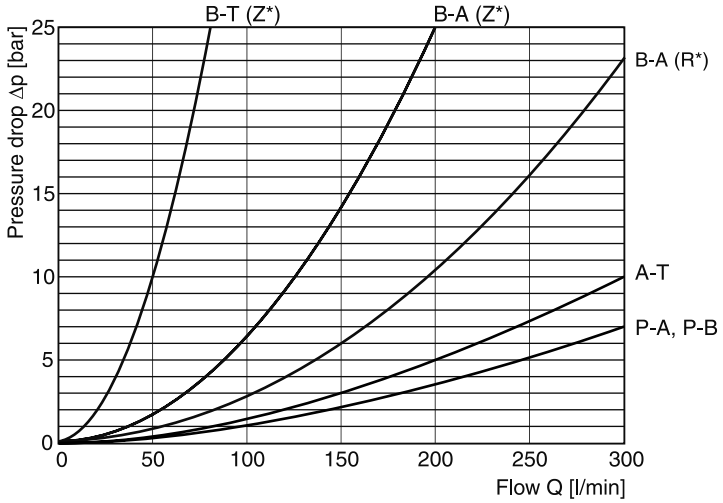

D91VW

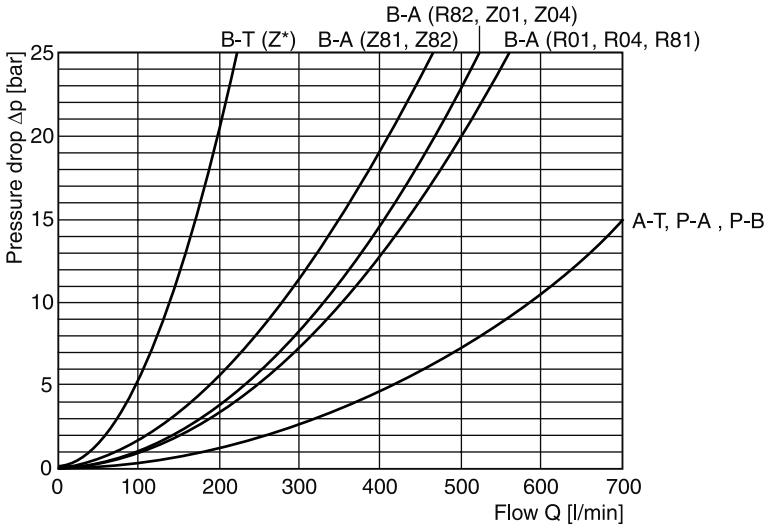

D111VW

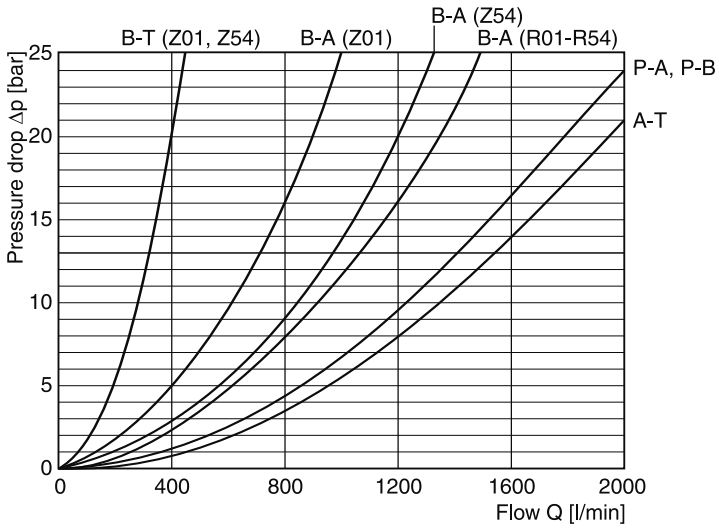

D31NW on request.

2

Pilot oil inlet (supply) and outlet (drain)

○ open, ● closed

Pilot oil Inlet	Pilot oil Drain	B	C
internal	external	○	●
external	external	●	●
internal	internal	○	○
external	internal	●	○

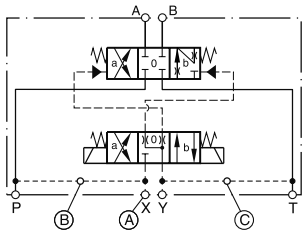

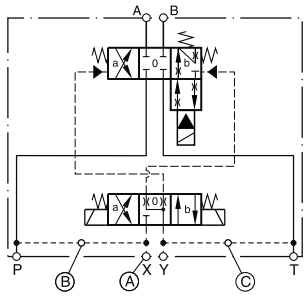

D31NWR

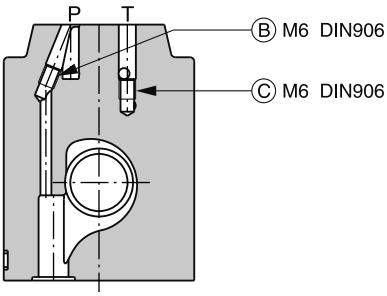

D41VWR

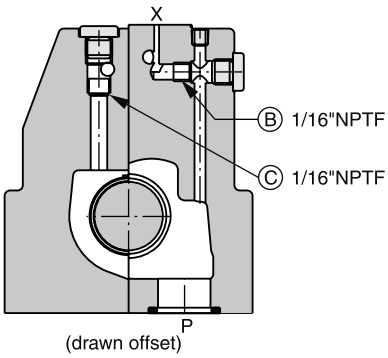

D41VWZ

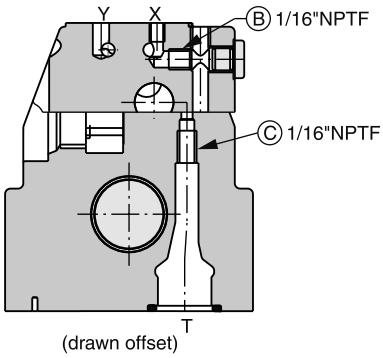

D91VWR

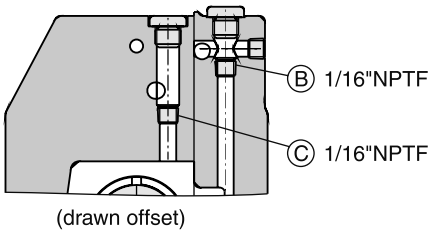

D91VWZ

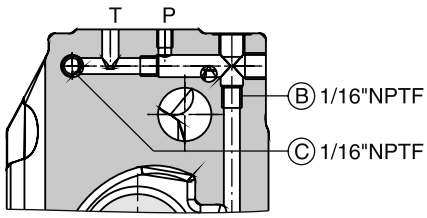

D111VWR

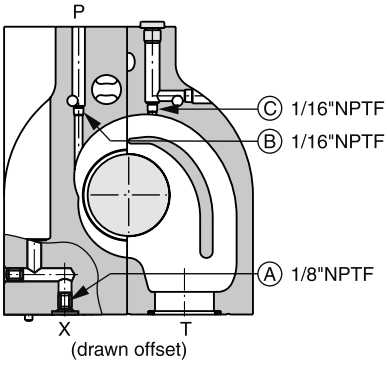

D111VWZ

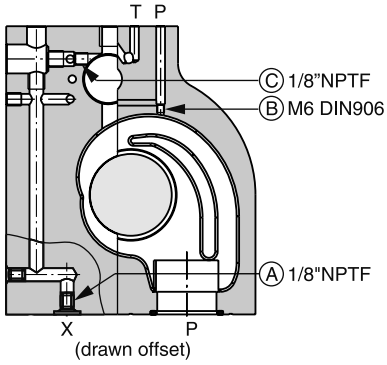

○ open, ● closed

Pilot oil Inlet	Pilot oil Outlet	A	B	C
internal	external	○	Orifice Ø1.5	●
external	external	Orifice Ø1.5	●	●
internal	internal	○	Orifice Ø1.5	○
external	internal	Orifice Ø1.5	●	○

2

D3DWR
Regenerative and hybrid function with additional plate ”H10-1666L / H10-1662 / A10-1664 / A10-1665L“, see chapter 12

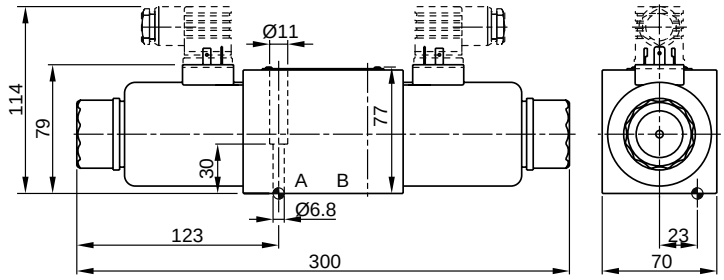

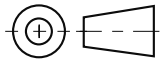

Surface finish	Kit			Kit
R_{max}6.3 ▱ 0.01/100	BK385	4x M6x40 ISO 4762-12.9	13.2 Nm ±15 %	**NBR: SK-D3W-30** FPM: SK-D3W-V-30

The space necessary to remove the plug per EN 175301-803, design type AF is at least 15 mm.
The torque for the screw M3 of the plug has to be 0.5 to 0.6 Nm.

2

D31NWR
Regenerative and hybrid function with additional plate ”H10-1666L / H10-1662 / A10-1664 / A10-1665L“, see chapter 12

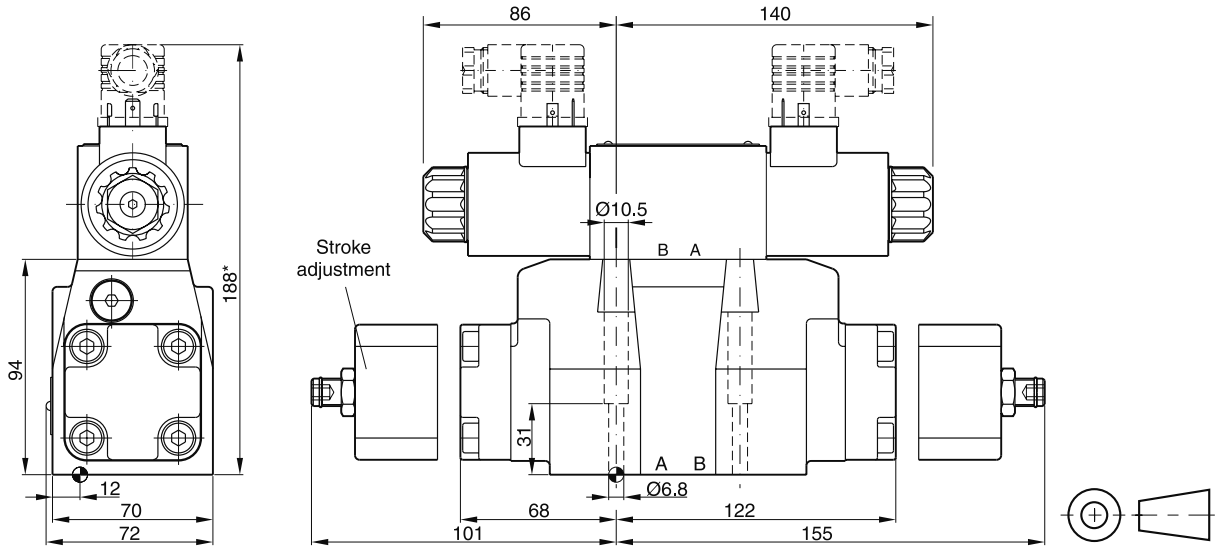

Surface finish	Kit			Kit
R_{max}6.3 ▱ 0.01/100	BK385	4x M6x40 ISO 4762-12.9	13.2 Nm ±15 %	**NBR: SK-D31NW-N-91** FPM: SK-D31NW-V-91

D41VWR/Z

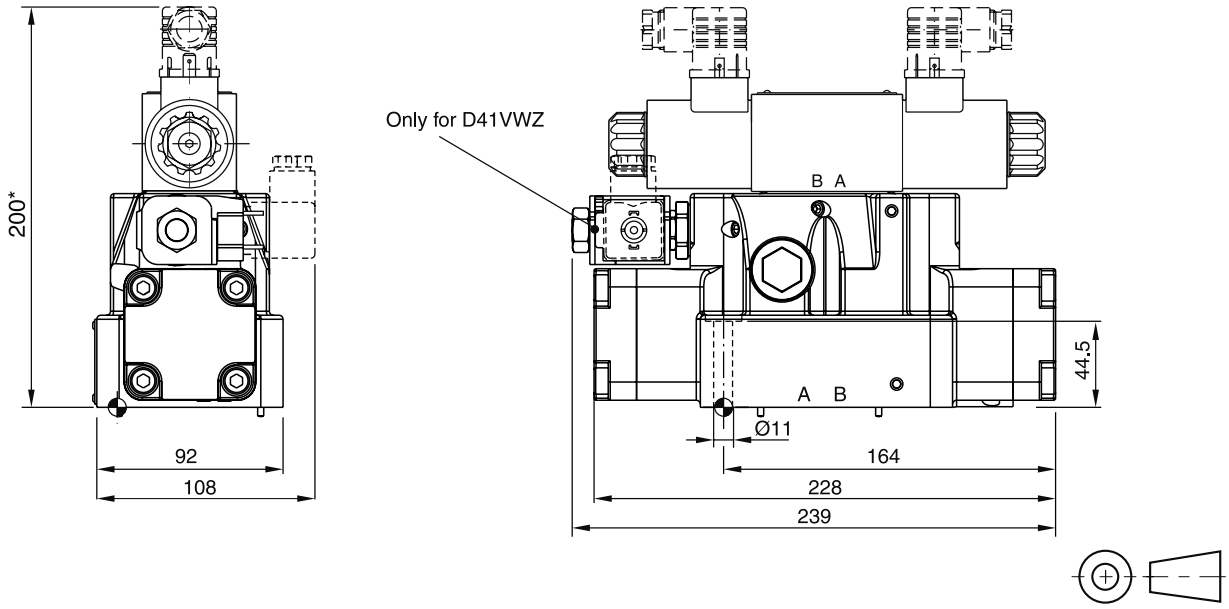

Surface finish	Kit			Kit
R_{max}6.3 ▱ 0.01/100	BK320	4x M10x60 2x M6x55 ISO 4762-12.9	63 Nm ±15 % 13.2 Nm ±15 %	**NBR: SK-D41VW-N-91** FPM: SK-D41VW-V-91

The space necessary to remove the plug per EN 175301-803, design type AF is at least 15 mm.
The torque for the screw M3 of the plug has to be 0.5 to 0.6 Nm.

* Please add for each sandwich plate +40 mm (pressure reducing valve, choke valve meter-in/-out).

D91VWR/Z

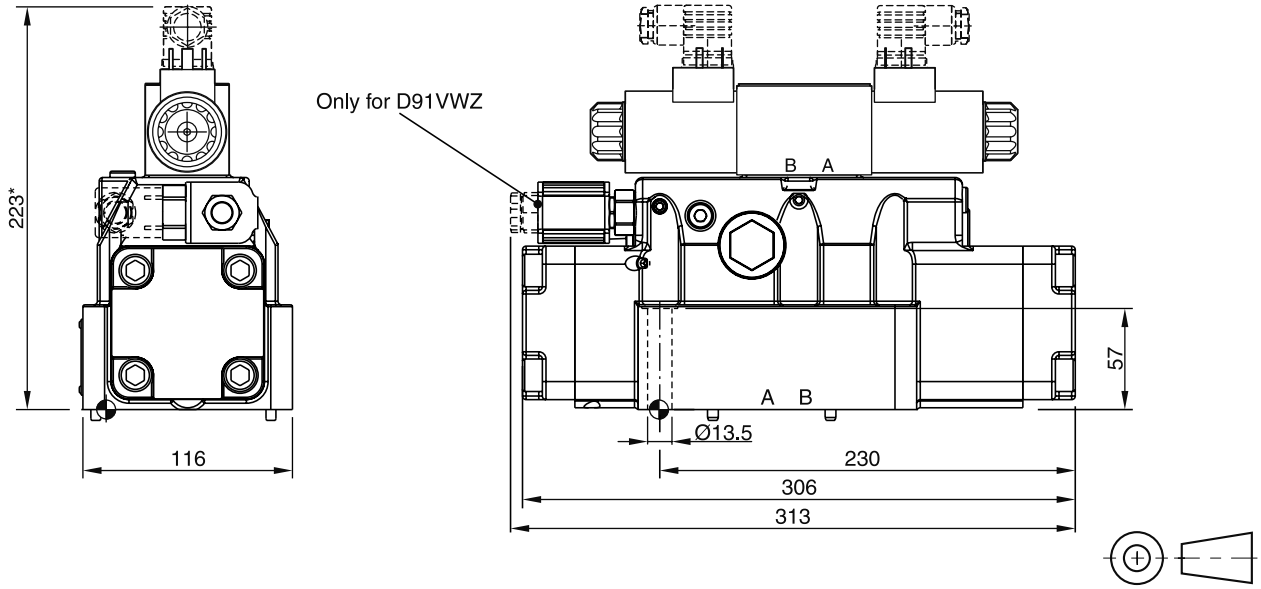

Surface finish	Kit			Kit
R_{max}6.3 ▱ 0.01/100	BK360	6x M12x75 ISO 4762-12.9	108 Nm ±15 %	**NBR: SK-D81VW-N-91 / SK-D91VW-N-91** FPM: SK-D81VW-V-91 / SK-D91VW-V-91

D111VW

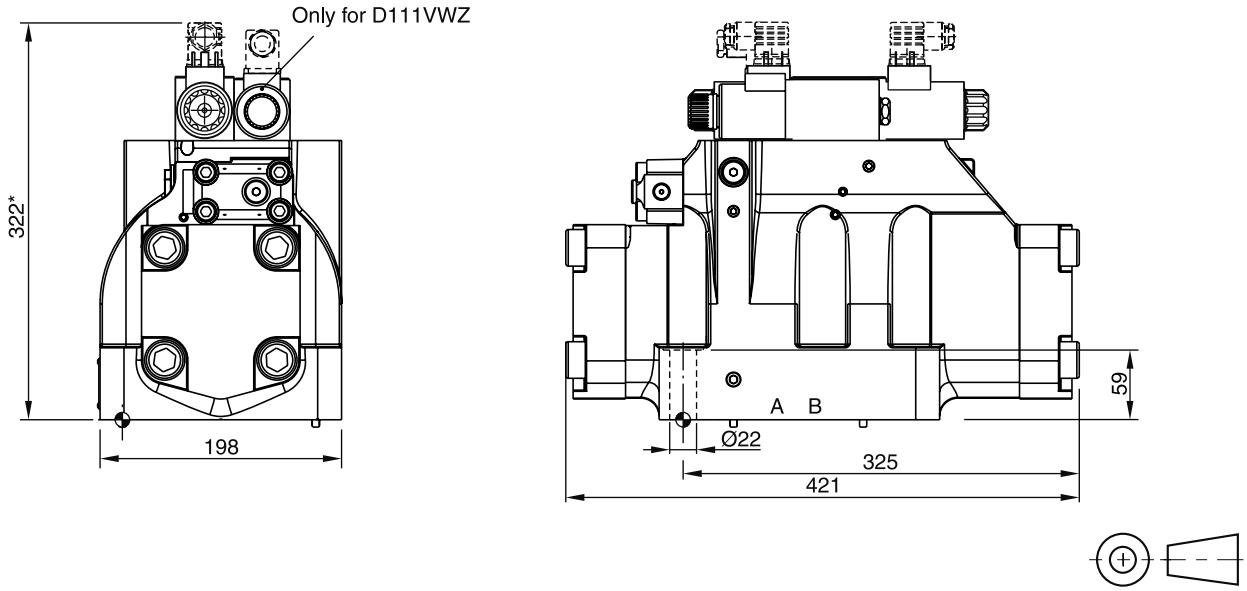

Surface finish	Kit			Kit
R_{max}6.3 ▱ 0.01/100	BK386	6x M20x90 ISO 4762-12.9	517 Nm ±15 %	**NBR: SK-D111VW-N-91** FPM: SK-D111VW-V-91

The space necessary to remove the plug per EN 175301-803, design type AF is at least 15 mm.
The torque for the screw M3 of the plug has to be 0.5 to 0.6 Nm.

* Please add for each sandwich plate +40 mm (pressure reducing valve, choke valve meter-in/-out).

Notes

Hydraulically operated directional control valves are available in 5 sizes:

D1VP*4L NG06 – operated via end caps
D1VP*90 NG06 – operated via end caps and mounting interface (X, Y)
D3DP NG10 – operated via mounting interface (X, Y)
D4P NG16 – operated via mounting interface (X, Y)
D9P NG25 – operated via mounting interface (X, Y)
D11P NG32 – operated via mounting interface (X, Y)

Size NG06 (D1VP) is available in two different designs:

- D1VP*4L for operating pressure >10 bar (over tank pressure) with control ports in the end caps.
- D1VP*90 for operating pressure >15 bar with control ports in the end caps and mounting interface (X, Y).

All other series are operated only via mounting interface (X, Y).

The shifting time is depending on the pilot pressure. For safe operation the minimum pilot pressure has to be ensured in all operating conditions. The maximum pilot pressure varies from the maximum operating pressure in some sizes.

D1VP*B*4L

D1VP*90

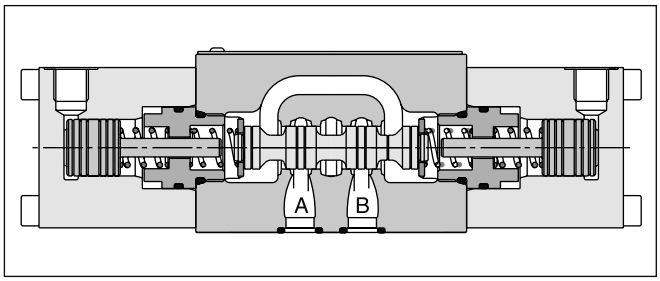

D1VP*C*4L

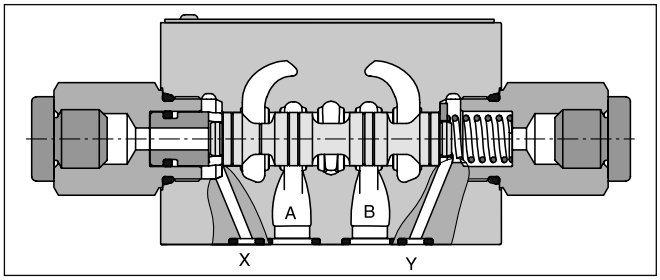

D1VP*90

Technical data

General						
Design	Directional spool valve					
Actuation	Hydraulic					
Series	**D1VP*4L**	**D1VP*90**	**D3DP**	**D4P**	**D9P**	**D11P**
Size	NG06	NG06	NG10	NG16	NG25	NG32
Weight [kg]	1.3	1.3	3.7	9.0	17.0	66.0
Mounting interface	DIN 24340 A06 ISO 4401 NFPA D03	DIN 24340 A06 ISO 4401 NFPA D03	DIN 24340 A10 ISO 4401 NFPA D05	DIN 24340 A16 ISO 4401 NFPA D07	DIN 24340 A25 ISO 4401 NFPA D08	DIN 24340 A32 ISO 4401 NFPA D10
	CETOP RP 121-H					
Mounting position	unrestricted, preferably horizontal					
Ambient temperature [°C]	-25...+60					
$MTTF_D$ value [years]	150					
Hydraulic						
Max. operating pressure [bar]	P, A B: 350; T: 140	P, A B; T: 350; X, Y: 210	P, A B, T: 350; X, Y: 210	P, A B, T: 350; X, Y: 350	P, A B, T: 350; X, Y: 350	P, A B, T: 350; X, Y: 350
Fluid	Hydraulic oil according to DIN 51524					
Fluid temperature [°C]	-20 ... +70 (NBR: -25...+70)					
Viscosity permitted [cSt] / [mm²/s]	2.8...400					
Viscosity recommended [cSt] / [mm²/s]	30...80					
Filtration	ISO 4406 (1999); 18/16/13					
Flow max. [l/min]	60 [1]	60 [1]	130	300	700	2000
Leakage at 350 bar (per flow path) [ml/min]	up to 60 [2]	up to 60 [2]	up to 100 [2]	up to 200 [2]	up to 800 [2]	up to 5000 [2]
Operating pressure (min/max) [bar]	10 [3] / 210	15 / 210	15 / 210	5 / 350	5 / 350	5 / 350
Pilot volume (start position to end position) [cm³]	0.59	0.34	1.1	4.2	12.3	59.7
Static / Dynamic						
Step response	The response times depend on the pilot oil pressure and on the speed of the increase / decrease of the pilot pressure.					

[1] Depending on spool, see shift limits. [2] Depending on spool. [3] > tank pressure.

D_P UK.indd RH 17.04.2015

2

D	1	V	P					
Directional control valve	**Size DIN NG06 CETOP 03 NFPA D03**	**3-chamber design**	**Hydraulically operated**	**Spool type**	**Spool position**	**Seals**	**Pilot port G1/8**	**Design series** (not required for ordering)

3 position spools	
Code	Spool type (a 0 b)
001	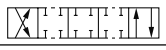
002	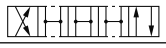
004	
006	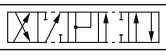
008 [1]	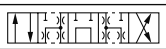
009 [1]	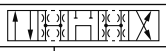

2 position spools	
Code	Spool type (a b)
020	
026	
030	

Code	Pilot port G1/8
4L	High tank pressure, indirect via pilot spool
90	Direct via X, Y port or pipe thread G1/8

Code	Seals
N	NBR
V	FPM

3 position spools [2]			
Code	Spool position		
C	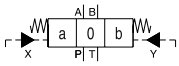		3 positions. Spring offset in position “0“. Operated in position “a“ or “b“.
	Standard	Spool type 008 and 009	
E	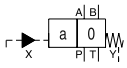 Operated in position “a“.	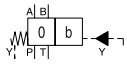 Operated in position “b“.	2 positions. Spring offset in position “0“.
F	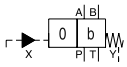 Spring offset in position “b“.	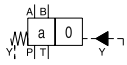 Spring offset in position “a“.	2 positions. Operated in position “0“.
K	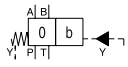 Operated in position “b“.	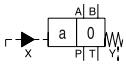 Operated in position “a“.	2 positions. Spring offset in position “0“.
M	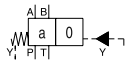 Spring offset in position “a“.	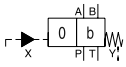 Spring offset in position “b“.	2 positions. Operated in position “0“.

2 position spools [2]		
Code	Spool position	
B	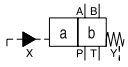	Spring offset in position “b“. Operated in position “a“.
D	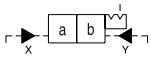	Detent, operated in position “a“ or “b“. No centre or offset position.
H	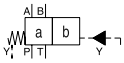	Spring offset in position “a“. Operated in position “b“.

[1] Consider specific spool position.
[2] Code 4L without ports X and Y.

Further spool types and styles on request.

D_P UK.indd RH 17.04.2015

D	3	D	P			2		
Directional control valve	Size DIN NG10 CETOP 05 NFPA D05	5-chamber design	Hydraulically operated	Spool type	Spool position	Pilot oil supply and drain external/ external	Seals	Design series (not required for ordering)

3 position spools	
Code	Spool type
	a 0 b
001	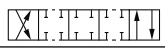
002	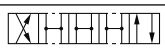
003	
004	
005	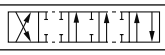
006	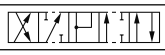
007	
008 [1]	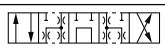
009 [1]	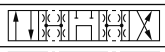
010	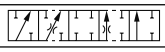
011	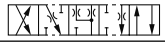
014	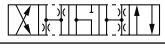
015	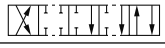
016	
021	
022	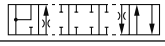
031	
032	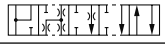
081	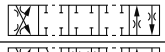
082	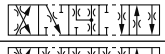
102	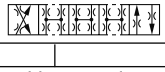

2 position spools	
Code	Spool type
	a b
020	
026	
030	
101	

Code	Seals
N	NBR
V	FPM

3 position spools			
Code	Spool position		
C	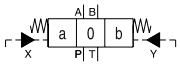		3 positions. Spring offset in position “0“. Operated in position “a“ or “b“.
	Standard	Spool type 008 and 009	
E	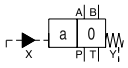 Operated in position “a“.	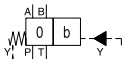 Operated in position “b“.	2 positions. Spring offset in position “0“.
F	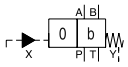 Spring offset in position “b“.	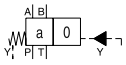 Spring offset in position “a“.	2 positions. Operated in position “0“.
K	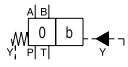 Operated in position “b“.	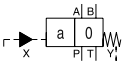 Operated in position “a“.	2 positions. Spring offset in position “0“.
M	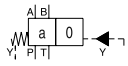 Spring offset in position “a“.	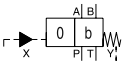 Spring offset in position “b“.	2 positions. Operated in position “0“.

2 position spools		
Code	Spool position	
B	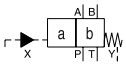	Spring offset in position “b“. Operated in position “a“.
D	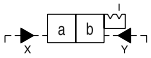	Detent, operated in position “a“ or “b“. No center or offset position.
H	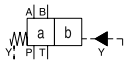	Spring offset in position “a“. Operated in position “b“.

[1] Consider specific spool position.

Further spool types and styles on request.

D_P UK.indd RH 17.04.2015

2

D		P		
Directional control valve	Size	Hydraulically operated	Spool type	Spool position

Code	Bore	Size
4	Ø20 mm	NG16
9	Ø32 mm	NG25
11	Ø50 mm	NG32

3 position spools		D4	D9	D11
Code	Spool type			
	a 0 b			
001	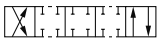	•	•	•
002	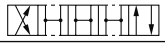	•	•	•
003		•	•	
004		•	•	•
005	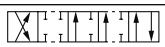	•	•	
006		•	•	
007	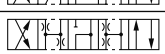	•	•	
009 [1]	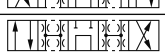	•	•	•
011	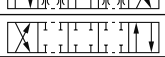	•	•	
014	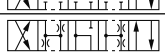	•	•	
015	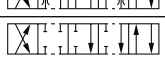	•	•	
016		•	•	
021		•	•	
022	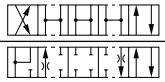	•	•	
031	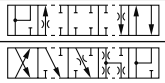		•	
032			•	
054	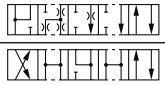	•	•	•
081	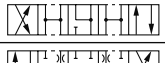	•	•	•
082	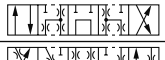	•	•	•

2 position spools		D4	D9	D11
Code	Spool type			
	a b			
020		•	•	•
026		•	•	
030		•	•	•

3 position spools			
Code	Spool position		
C	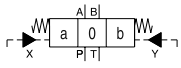		3 positions. Spring offset in position “0“. Operated in position “a“ or “b“.
	Standard	Spool type 009	
E	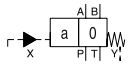 Operated in position “a“.	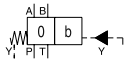 Operated in position “b“.	2 positions. Spring offset in position “0“.
F	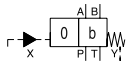 Spring offset in position “b“.	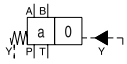 Spring offset in position “a“.	2 positions. Operated in position “0“.
K	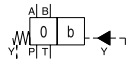 Operated in position “b“.	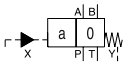 Operated in position “a“.	2 positions. Spring offset in position “0“.
M	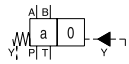 Spring offset in position “a“.	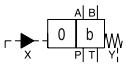 Spring offset in position “b“.	2 positions. Operated in position “0“.
R [2]	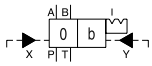 No centre in offset position.	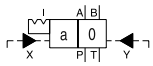 No centre in offset position.	2 positions detent. Operated in position “0“ or “b“.
S [2]	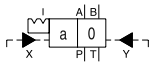 No centre in offset position.	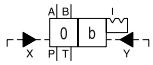 No centre in offset position.	2 positions detent. Operated in position “0“ or “a“. No center in offset position.

2 position spools		
Code	Spool position	
B	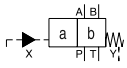	Spring offset in position “b“. Operated in position “a“.
D	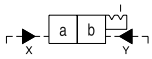	Detent, operated in position “a“ or “b“. No centre or offset position.
H	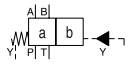	Spring offset in position “a“. Operated in position “b“.

[1] Consider specific spool position.

[2] Only D4 and D9 available.

D_P UK.indd RH 17.04.2015

2	□	□	[ ]
Pilot oil supply and drain external/ external	**Seals**	**Accessories**	**Design series** (not required for ordering)

Code	Accessories
omit	Standard valve w/o accessories
3A	Pilot choke, meter-out
3B	Pilot choke, meter-in
3D [2)]	Stroke adjustment side B
3E [2)]	Stroke adjustment side A
3F [2)]	Stroke adjustment side A and B

Code	Seals
N	NBR
V	FPM

Further spool types, styles and position control on request.

D_P UK.indd RH 17.04.2015

2

The flow curve diagram shows the flow versus pressure drop curves for all spool types. The relevant curve number for each spool type, operating position and flow direction is given in the table below.

	Position „b“		Position „a“		Position „0“				
Spool	**P->A**	**B->T**	**P->B**	**A->T**	**P->A**	**P->B**	**A->T**	**B->T**	**P->T**
001	2	2	2	2	–	–	–	–	–
002	1	4	1	4	1	1	5	5	2
004	2	3	2	3	–	–	7	7	–
006	1	4	1	4	7	7	–	–	–
020	4	4	2	3	–	–	–	–	–
026	4	–	4	–	–	–	–	–	–
030	2	3	1	2	–	–	–	–	–
	P->B	A->T	P->A	B->T	P->A	P->B	A->T	B->T	P->T
008	4	5	4	5	–	–	–	–	8
009	5	5	6	7	–	–	–	–	7

Flow curves

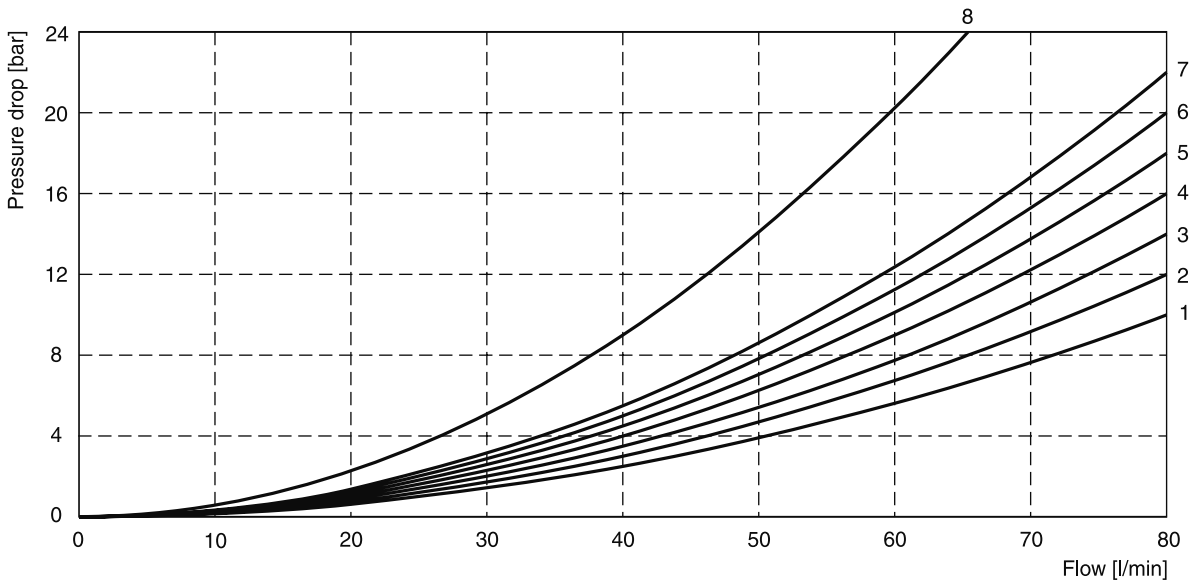

All characteristic curves measured with HLP46 at 50°C.

Shift limits

Spool	Shift limit [l/min]
001 002 004 006 020 030	60
008 009	40
026	20

The flow curve diagram shows the flow versus pressure drop curves for all spool types. The relevant curve number for each spool type, operating position and flow direction is given in the table below.

	Position „b“		Position „a“		Position „0“					
Spool	P-A	B-T	P-B	A-T	P-A	P-B	A-T	B-T	P-T	A-B
001	4	3	4	3	–	–	–	–	–	–
002	2	4	3	3	2	2	1	2	3	4
003	2	2	4	1	–	–	5	–	–	–
004	4	3	3	2	–	–	5	5	–	6
005	1	3	4	2	4	–	–	–	–	–
006	2	4	3	3	5	5	–	–	–	6
007	4	2	2	2	–	2	–	2	5	–
010	2	–	2	–	–	–	–	–	–	–
011	3	3	2	3	–	–	10	10	–	11
014	2	3	4	2	2	–	2	–	5	–
015	4	2	2	2	–	–	–	4	–	–
016	4	2	1	1	–	4	–	–	–	–
020	4	4	4	4	–	–	–	–	–	–
026	3	–	3	–	–	–	–	–	–	–
030	4	3	3	3	–	–	–	–	–	–
081	6	7	6	7	–	–	–	–	–	–
082	7	7	6	5	–	–	11	11	–	11
101	9	9	9	9	–	–	–	–	–	–
102	2	2	2	1	6	6	3	5	6	6
	P-B	A-T	P-A	B-T	P-A	P-B	A-T	B-T	P-T	A-B
008	4	2	5	6					8	
009	2	5	2	6	–	–	–	–	8	–

	Position „b“			Position „a“			Position „0“	
	P-A	B-T	A-B	P-B	A-T		A-T	
021	3	5	6	4	2	–	–	–
031	3	5	6	4	1	–	9	–
	P-A	B-T		P-A	P-B	A-B		B-T
022	5	4	–	5	2	6	–	–
032	5	2	–	5	2	6	–	9

Flow curves

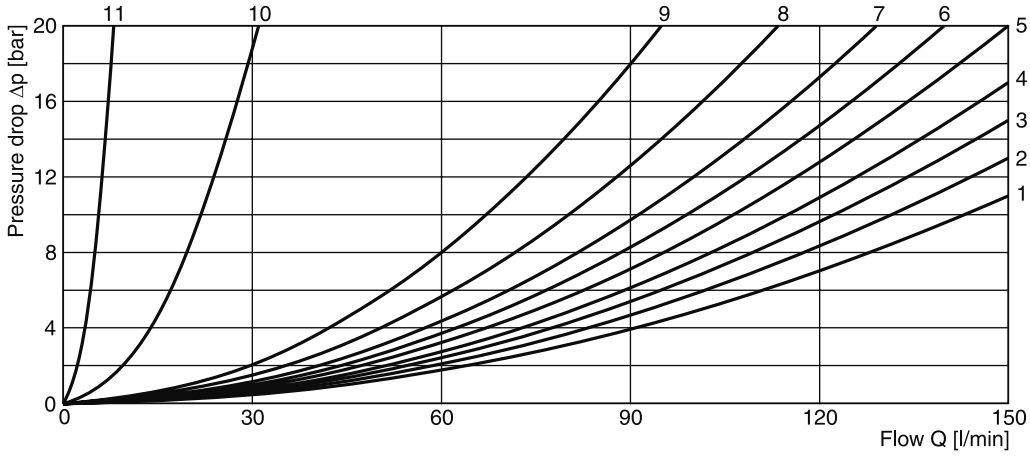

All characteristic curves measured with HLP46 at 50°C.

2

The flow curve diagram shows the flow versus pressure drop curves for all spool types. The relevant curve number for each spool type, operating position and flow direction is given in the table below.

D4P

Spool Code	Curve number				
	P-A	P-B	P-T	A-T	B-T
001	1	1	–	4	5
002	1	2	6	4	6
003	1	2	–	5	6
004	1	1	–	5	5
005	2	2	–	3	5
006	1	2	–	3	6
007	1	1	6	4	5
009	2	9	8	7	10
011	1	1	–	4	5
014	1	1	6	4	5
015	1	2	–	4	6
016	2	2	–	3	5
020	3	5	–	3	5
021	2	8	–	2	–
022	8	2	–	–	3
026	3	5	–	–	–
030	2	3	–	6	7
054	2	3	–	6	7

D4P

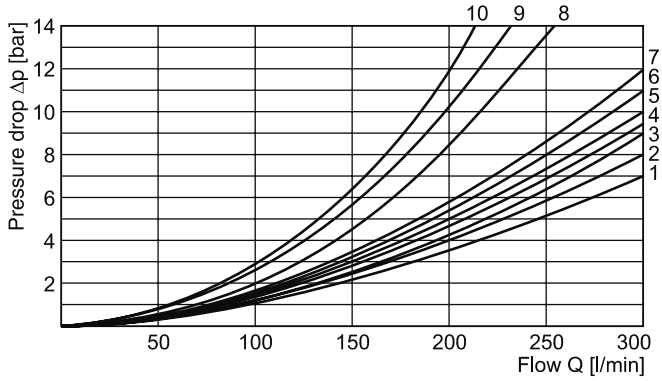

D9P and D11P

Spool Code	Curve number									
	P-A		P-B		P-T		A-T		B-T	
	D9	D11	D9	D11	D9	D11	D9	D11	D9	D11
001	3	5	2	5	–	–	3	4	5	1
002	2	5	1	5	1	5	3	4	5	1
003	4	–	2	–	–	–	3	–	6	–
004	4	5	3	5	–	–	3	4	5	1
005	1	–	2	–	–	–	4	–	5	–
006	2	–	2	–	–	–	4	–	6	–
007	3	–	1	–	7	–	3	–	5	–
009	4	3	8	3	9	2	4	3	10	1
011	3	–	2	–	–	–	3	–	5	–
014	1	–	2	–	8	–	3	–	5	–
015	3	–	3	–	–	–	4	–	5	–
016	3	–	3	–	–	–	4	–	5	–
020	6	5	5	5	–	–	6	3	8	1
021	5	–	10	–	–	–	3	–	–	–
022	10	–	5	–	–	–	–	–	5	–
026	6	–	5	–	–	–	–	–	–	–
030	3	5	2	5	–	–	3	4	5	1
054	–	5	–	5	–	–	–	4	–	1

D9P

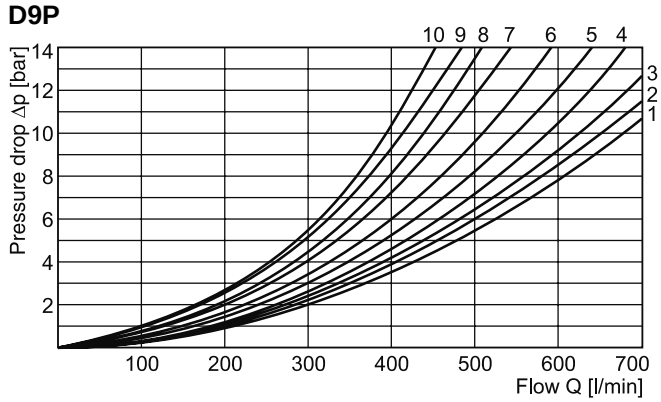

D11P

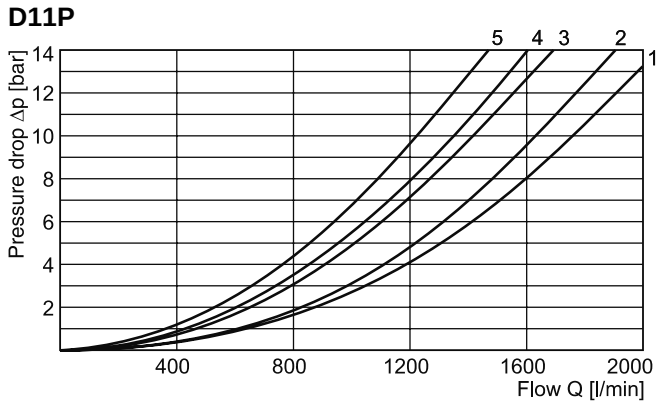

All characteristic curves measured with HLP46 at 50°C.

D1VP*90

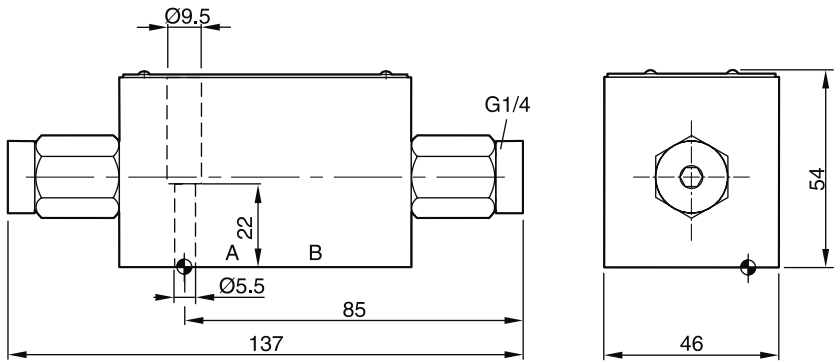

Surface finish	Kit			Kit
R_{max}6.3 ▱ 0.01/100	BK375	4x M5x30 ISO 4762-12.9	7.6 Nm ±15 %	**NBR: SK-D1VP-N-87** FPM: SK-D1VP-V-87

D1VP*4L

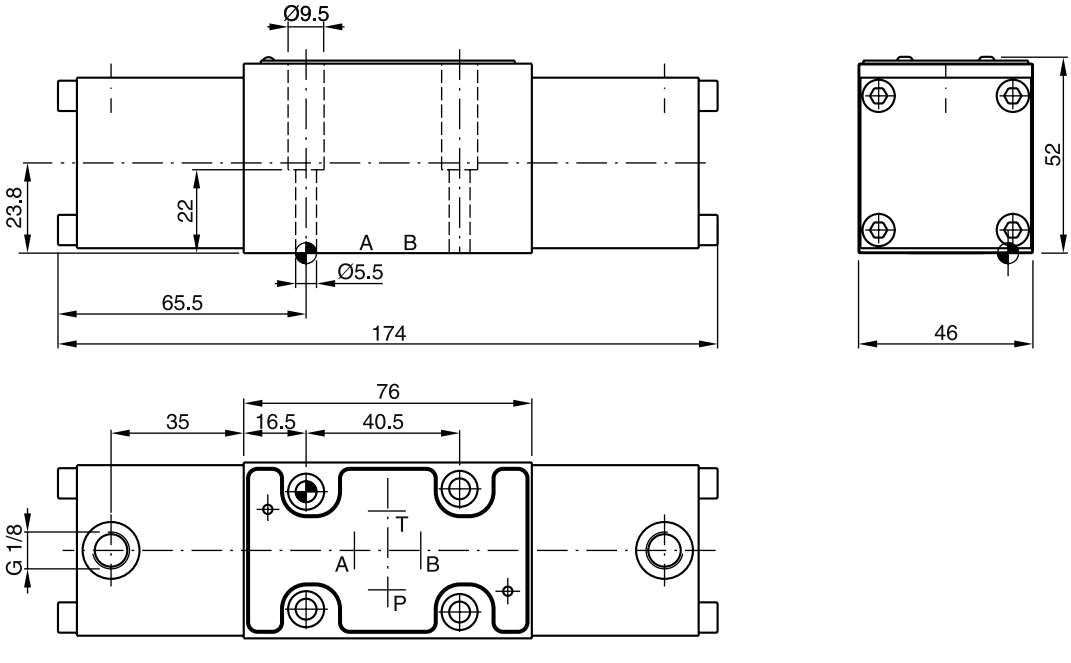

Surface finish	Kit			Kit
R_{max}6.3 ▱ 0.01/100	BK375	4x M5x30 ISO 4762-12.9	7.6 Nm ±15 %	**NBR: SK-D1VP-N4-91** FPM: SK-D1VP-V4-91

2

D3DP

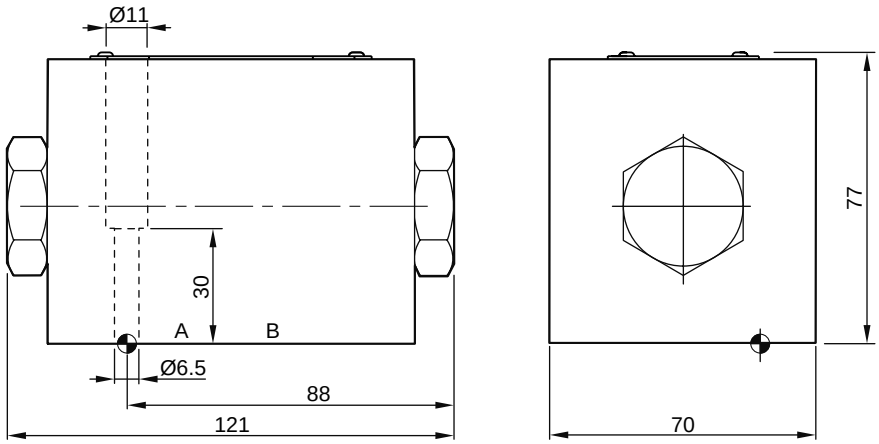

Surface finish	Kit			Kit
R_{max}6.3 / 0.01/100	BK385	4x M6x40 ISO 4762-12.9	13.2 Nm ±15 %	**NBR: SK-D3DP-N-42** FPM: SK-D3DP-V-42

D4P

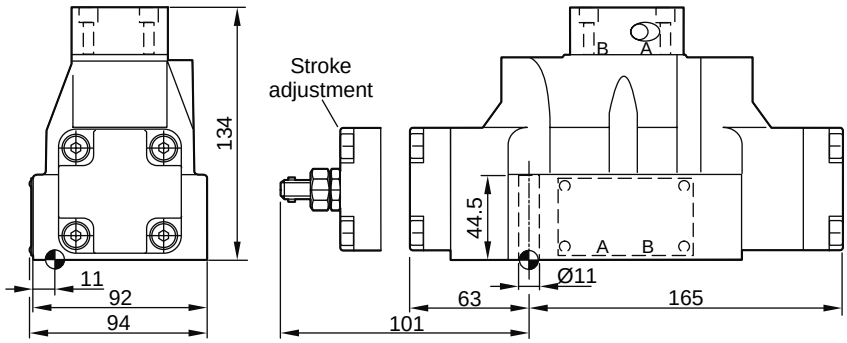

Surface finish	Kit			Kit
R_{max}6.3 / 0.01/100	BK320	4x M10x60 2 x M6x55 ISO 4762-12.9	63 Nm ±15 % 13.2 Nm ±15 %	**NBR: SK-D41VW-N-91** FPM: SK-D41VW-V-91

D9P

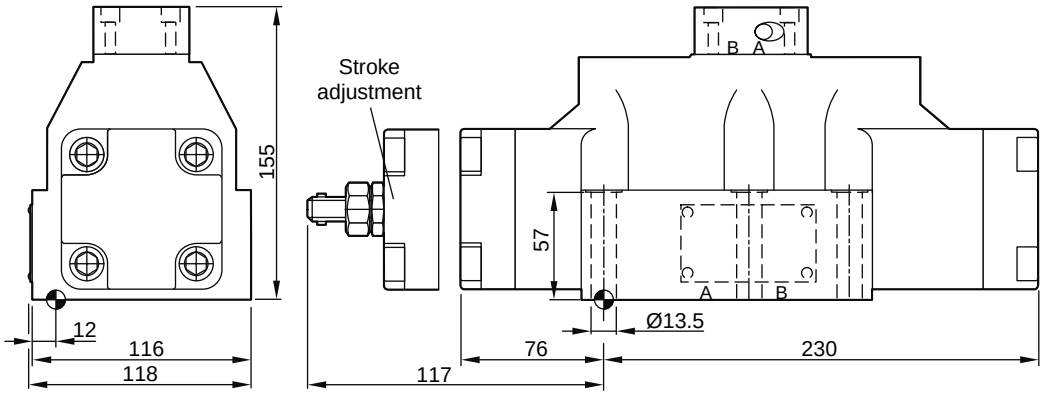

Surface finish	Kit			Kit
R_{max}6.3 ▱ 0.01/100	BK360	6x M12x75 ISO 4762-12.9	108 Nm ±15 %	**NBR: SK-D91VW-N-91** FPM: SK-D91VW-V-91

D11P

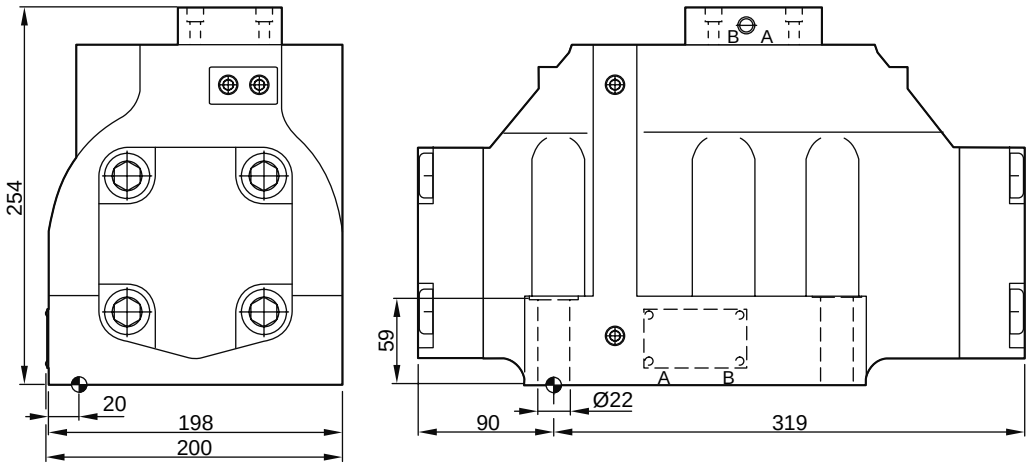

Surface finish	Kit			Kit
R_{max}6.3 ▱ 0.01/100	BK386	6x M20x90 ISO 4762-12.9	517 Nm ±15 %	**NBR: SK-D111VW-N-91** FPM: SK-D111VW-V-91

2

Pneumatically controlled directional control valves of series D1VA are based on the standard D1VW design.

The main spool is operated via an auxiliary spool of larger diameter. Thus enables low operating pressures from 3 to 5 bar.

Pneumatic connection via thread G1/8 in the end caps.

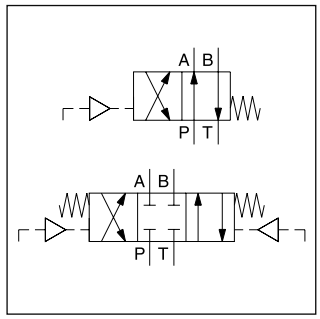

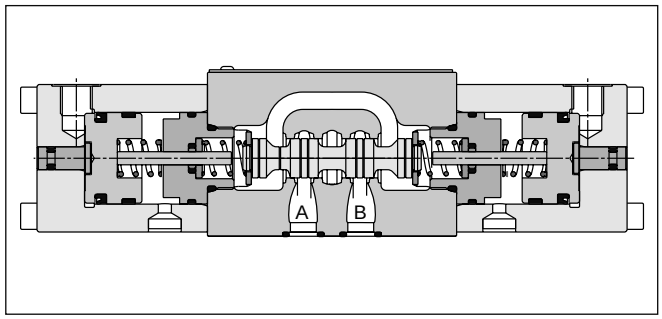

Technical data

General		
Design		Directional spool valve
Actuation		Pneumatic
Size		DIN NG06 / CETOP 03 / NFPA D03
Mounting interface		DIN 24340 A06, ISO 4401, NFPA D03, CETOP RP 121-H
Mounting position		unrestricted, preferably horizontal
Ambient temperature	[°C]	-25...+60
$MTTF_D$ value	[years]	150
Weight	[kg]	1.3
Hydraulic		
Max. operating pressure	[bar]	P, A B: 350; T: 105
Fluid		Hydrauliköl nach DIN 51524
Fluid temperature	[°C]	-20 ... +70 (NBR: -25...+70)
Viscosity permitted	[cSt] / [mm²/s]	2.8...400
Viscosity recommended	[cSt] / [mm²/s]	30...80
Filtration		ISO 4406 (1999); 18/16/13
Flow max.	[l/min]	60 [1)]
Leakage at 350 bar (per flow path)	[ml/min]	up to 60 [1)]
Operating pressure w/o tank pressure with max tank	[bar] [bar]	min. 3 min. 5
Static / Dynamic		
Step response		The response times depend on the pilot oil pressure and on the speed of the increase / decrease of the pilot pressure.
Recommended values are (act./deact.) depending on pilot pressure and pipe length	[ms]	13/28

[1)] Depending on spool.

D1VA UK.indd RH 17.04.2015

D	1	V	A				4L	
Directional control valve	**Size DIN NG06 CETOP 03 NFPA D03**	**3-chamber design**	**Pneumatically operated**	**Spool type**	**Spool position**	**Seals**	**Indirect actuation via pilot spool; G1/8**	**Design series** (not required for ordering)

3 position spools	
Code	Spool type (a 0 b)
001	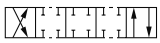
002	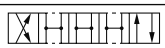
004	
006	
008 [1]	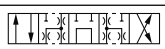
009 [1]	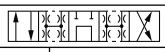

2 position spools	
Code	Spool type (a b)
020	
026	
030	

Code	Seals
N	**NBR**
V	FPM

3 position spools			
Code	Spool position		
C	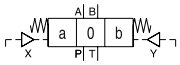		**3 positions. Spring offset in position “0“. Operated in position “a“ or “b“.**
	Standard	Spool type 008, 009	
E	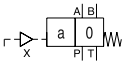 Operated in position “a“.	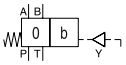 Operated in position “b“.	2 positions. Spring offset in position “0“.
F	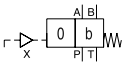 Spring offset in position “b“.	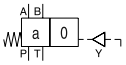 Spring offset in position “a“.	2 positions. Operated in position “0“.
K	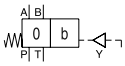 Operated in position “b“.	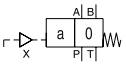 Operated in position “a“.	2 positions. Spring offset in position “0“.
M	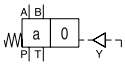 Spring offset in position “a“.	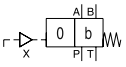 Spring offset in position “b“.	2 positions. Operated in position “0“.

2 position spools		
Code	Spool position	
B	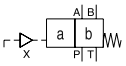	**Spring offset in position “b“. Operated in position “a“.**
D	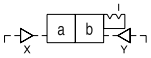	**Detent, operated in position “a“ or “b“. No centre or offset position.**
H	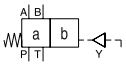	**Spring offset in position “a“. Operated in position “b“.**

Bold letters =
Short-term availability

[1] Consider specific spool position.

Further spool types and styles on request.

D1VA UK.indd RH 17.04.2015

2

The flow curve diagram shows the flow versus pressure drop curves for all spool types. The relevant curve number for each spool type, operating position and flow direction is given in the table below.

	Position „b“		Position „a“		Position „0“				
Spool	P->A	B->T	P->B	A->T	P->A	P->B	A->T	B->T	P->T
001	2	2	2	2	–	–	–	–	–
002	1	4	1	4	1	1	5	5	2
004	2	3	2	3	–	–	7	7	–
006	1	4	1	4	7	7	–	–	–
020	4	4	2	3	–	–	–	–	–
026	4	–	4	–	–	–	–	–	–
030	2	3	1	2	–	–	–	–	–
	P->B	A->T	P->A	B->T	P->A	P->B	A->T	B->T	P->T
008	4	5	4	5	–	–	–	–	8
009	5	5	6	7	–	–	–	–	7

Flow curves

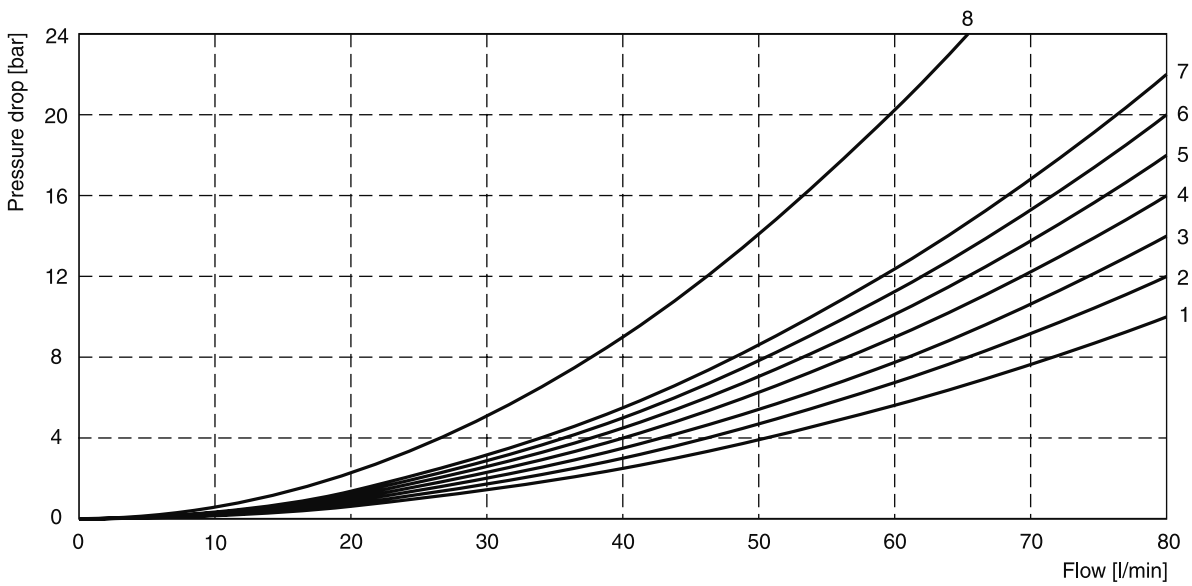

All characteristic curves measured with HLP46 at 50 °C.

Shift limits

Spool	Shift limit [l/min]
001 002 004 006 020 030	60
008 009	40
026	20

B, E, F -style

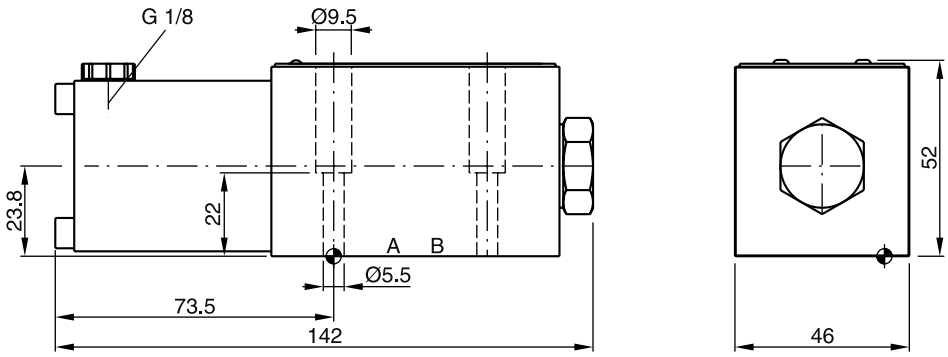

H, K, M -style

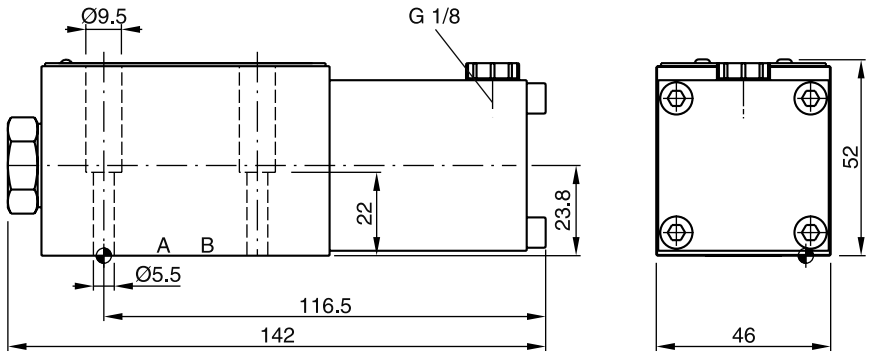

C, D -style

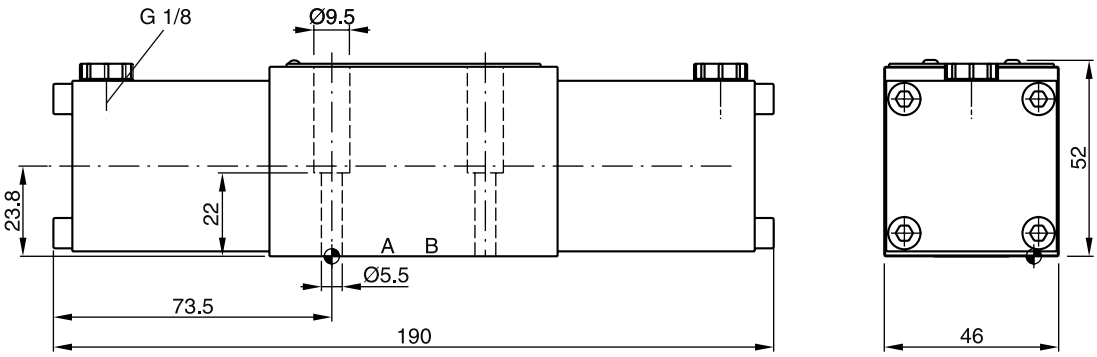

Surface finish	Kit			Kit
R_{max}6.3 ▱ 0.01/100	BK375	4x M5x30 ISO 4762-12.9	7.6 Nm ±15 %	**NBR: SK-D1VA-N-91** FPM: SK-D1VA-V-91

2

The D1VL is a 3 chamber, D3DL, D4L and D9L are 5 chamber 4/3- or 4/2-way directional control valves.

The hand lever is directly connected to the spool and can be located either on the A or B side. Spring offset and detent designs are available.

Directional control valves with hand lever are available in 4 sizes:

- D1VL NG06
- D3DL NG10
- D4L NG16
- D9L NG25

Features

- All hand lever parts stainless steel

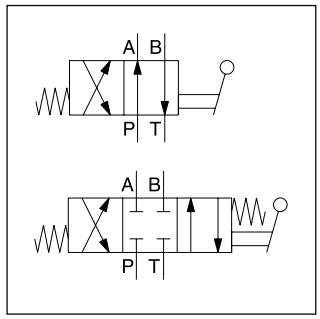

D1VL

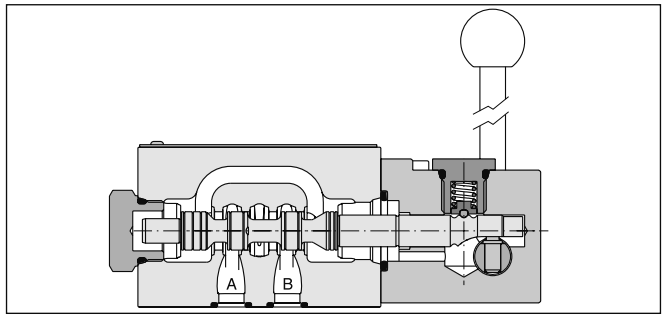

D1VL

Technical data

General					
Design		Directional spool valve			
Actuation		Lever			
Series		**D1VL**	**D3DL**	**D4L**	**D9L**
Size		NG06	NG10	NG16	NG25
Weight	[kg]	1.4	3.7	9.0	17.0
Mounting interface		DIN 24340 A06 ISO 4401 NFPA D03	DIN 24340 A10 ISO 4401 NFPA D05	DIN 24340 A16 ISO 4401 NFPA D07	DIN 24340 A25 ISO 4401 NFPA D08
		CETOP RP 121-H			
Mounting position		unrestricted, preferably horizontal			
Ambient temperature	[°C]	-25...+60			
$MTTF_D$ value	[years]	150			
Hydraulic					
Max. operating pressure	[bar]	P, A B: 350; T: 140	P, A B: 350; T: 140	external drain P, A B, T: 350; X, Y: 140 internal drain P, A B: 350; T, X, Y: 140	external drain P, A B, T: 350; X, Y: 140 internal drain P, A B: 350; T, X, Y: 140
Fluid		Hydraulic oil according to DIN 51524			
Fluid temperature	[°C]	-20 ... +70 (NBR: -25...+70)			
Viscosity permitted	[cSt] / [mm²/s]	2.8...400			
Viscosity recommended	[cSt] / [mm²/s]	30...80			
Filtration		ISO 4406 (1999); 18/16/13			
Flow max.	[l/min]	80	130	300	700
Leakage at 350 bar (per flow path)	[ml/min]	–	up to 100 [1)]	up to 200 [1)]	up to 800 [1)]
Leakage at 50 bar (per flow path)	[ml/min]	up to 10 [1)]	–	–	–

[1)] Depending on spool.

D_L UK.indd RH 17.04.2015

D	1	V						
Directional control valve	**Size DIN NG06, CETOP 03 NFPA D03**	**3-chamber valve**	**Actuation**	**Spool type**	**Spool position**	**Seals**	**Switching logic**	**Design series** (not required for ordering)

Code	Actuation	
L	**Hand lever side B**	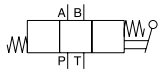
LB	**Hand lever side A**	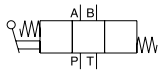

Code	Switching logic
4J [2]	**Center of rotation below spool axis (Parker style)**
4K [2]	**Center of rotation above spool axis (Denison style)**

Code	Seals
N	**NBR**
V	FPM

3 position spools	
Code	Spool type
	a 0 b
001	
002	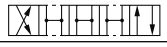
004	
006	
009 [1]	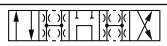
042	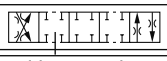

2 position spools	
Code	Spool type
	a b
020	

3 position spools			
Code	Spool position		
C	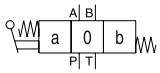		**3 positions. Spring offset in position “0“. Operated in position “a“ or “b“.**
	Standard	Spool type 009	
E	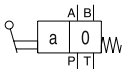 Operated in position “a“.	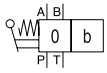 Operated in position “b“.	2 positions. Spring offset in position “0“.
K	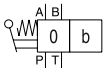 Operated in position “b“.	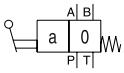 Operated in position “a“.	2 positions. Spring offset in position “0“.
N	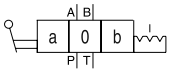 No centre in offset position.	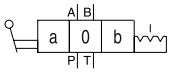 No centre in offset position.	3 positions, detent. Operated in position “a“, “0“or “b“.
R	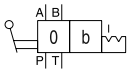 No centre in offset position.	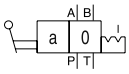 No centre in offset position.	2 positions, detent. Operated in position “0“ or “b“.
S	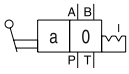 No centre in offset position.	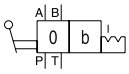 No centre in offset position.	2 positions, detent. Operated in position “0“ or “a“. No center in offset position.

2 position spools		
Code	Spool position	
B	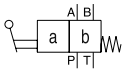	**Spring offset in position “b“. Operated in position “a“.**
D	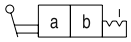	Detent, operated in position “a“ or “b“. No center or offset position.
H	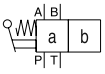	Spring offset in position “a“. Operated in position “b“.

[1] Consider specific spool position.
[2] Details see dimensions.

Bold letters =
Short-term availability

Further spool types on request.

D_L UK.indd RH 17.04.2015

2

D	3	D						
Directional control valve	**Size DIN NG10, CETOP 05 NFPA D05**	**5-chamber valve**	**Actuation**	**Spool type**	**Spool position**	**Seals**	**Switching logic**	**Design series** (not required for ordering)

Code	Actuation	
L	**Hand lever side B**	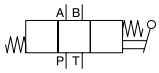
LB	**Hand lever side A**	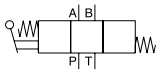

Code	Switching logic
4J [2]	**Center of rotation below spool axis (Parker style)**
4K [2]	**Center of rotation above spool axis (Denison style)**

Code	Seals
N	**NBR**
V	FPM

3 position spools

Code	Spool type a 0 b
001	
002	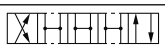
004	
006	
009 [1]	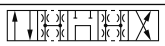
010	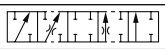

2 position spools

Code	Spool type a b
020	

3 position spools

Code	Spool position		
C	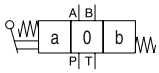		**3 positions. Spring offset in position “0“. Operated in position “a“ or “b“.**
	Standard	Spool type 009	
E	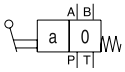 Operated in position “a“.	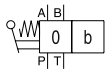 Operated in position “b“.	2 positions. Spring offset in position “0“.
K	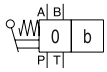 Operated in position “b“.	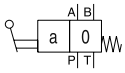 Operated in position “a“.	2 positions. Spring offset in position “0“.
N	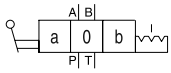 No centre in offset position.	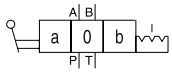 No centre in offset position.	3 positions, detent. Operated in position “a“, “0“or “b“.
R	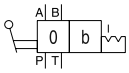 No centre in offset position.	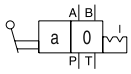 No centre in offset position.	2 positions, detent. Operated in position “0“ or “b“.
S	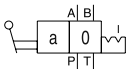 No centre in offset position.	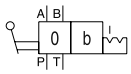 No centre in offset position.	2 positions, detent. Operated in position “0“ or “a“. No center in offset position.

2 position spools

Code	Spool position	
B	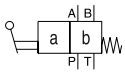	**Spring offset in position “b“. Operated in position “a“.**
D	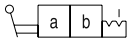	Detent, operated in position “a“ or “b“. No center or offset position.
H	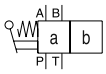	Spring offset in position “a“. Operated in position “b“.

[1] Consider specific spool position.
[2] Details see dimensions.

Bold letters =
Short-term availability

Further spool types on request.

D_L UK.indd RH 17.04.2015

D							
Directional control valve	**Size**	**Actuation**	**Spool type**	**Spool position**	**Pilot oil drain**	**Seals**	**Design series** (not required for ordering)

Code	Bore	Size
4	Ø20 mm	NG16
9	Ø32 mm	NG25

Code	Outlet
2 [2]	External
5 [3]	Internal

Code	Seals
N	NBR
V	FPM

Code	Actuation	
L	Hand lever side B	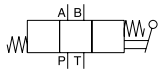
LB	Hand lever side A	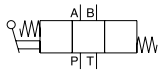

3 position spools		D4	D9
Code	Spool type		
	a 0 b		
001	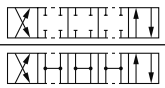	•	•
002		•	•
003		•	•
004		•	•
006	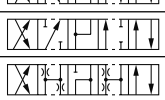	•	
007		•	•
009 [1]	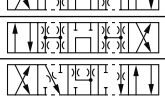	•	•
011		•	•
014		•	•
015	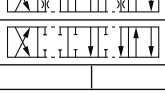	•	•

2 position spools			
Code	Spool type		
	a b		
020	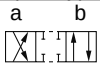	•	•
030	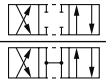	•	•

Code	3 position spools		
C	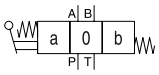		3 positions. Spring offset in position “0“. Operated in position “a“ or “b“.
	Standard	Spool type 009	
E	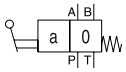 Operated in position “a“.	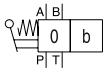 Operated in position “b“.	2 positions. Spring offset in position “0“.
F	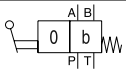 Operated in position “0“.	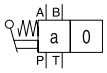 Operated in position “0“.	2 positions. Spring offset in position “b“.
K	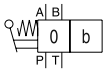 Operated in position “b“.	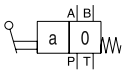 Operated in position “a“.	2 positions. Spring offset in position “0“.
M	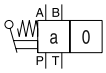 Operated in position “0“.	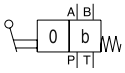 Operated in position “0“.	2 positions. Spring offset in position “a“.
N	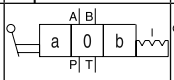 No centre in offset position.	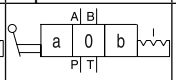 No centre in offset position.	3 positions, detent. Operated in position “a“, “0“ or “b“.
R	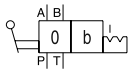 No centre in offset position.	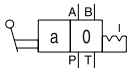 No centre in offset position.	2 positions, detent. Operated in position “0“ or “b“.
S	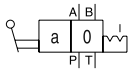 No centre in offset position.	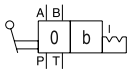 No centre in offset position.	2 positions, detent. Operated in position “0“ or “a“. No center in offset position.

Code	2 position spools	
B	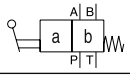	Spring offset in position “b“. Operated in position “a“.
D	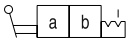	Detent, operated in position “a“ or “b“. No center or offset position.
H	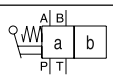	Spring offset in position “a“. Operated in position “b“.

Further spool types on request.

[1] Consider specific spool position.
[2] Pressure T-port > 140 bar.
[3] Pressure T-port < 140 bar.

D_L UK.indd RH 17.04.2015

2

The flow curve diagrams show the flow versus pressure drop curves for all spool types. The relevant curve number for each spool type, operating position and flow direction is given in the tables below.

D1VL

	Position „b“		Position „a“		Position „0“				
Spool	P->A	B->T	P->B	A->T	P->A	P->B	A->T	B->T	P->T
001	2	2	2	2	–	–	–	–	–
002	1	4	1	4	1	1	5	5	2
004	2	3	2	3	–	–	7	7	–
006	1	4	1	4	7	7	–	–	–
020	4	4	2	3	–	–	–	–	–
	P->B	A->T	P->A	B->T	P->A	P->B	A->T	B->T	P->T
009	5	5	6	7	–	–	–	–	7

Flow curve diagram D1VL

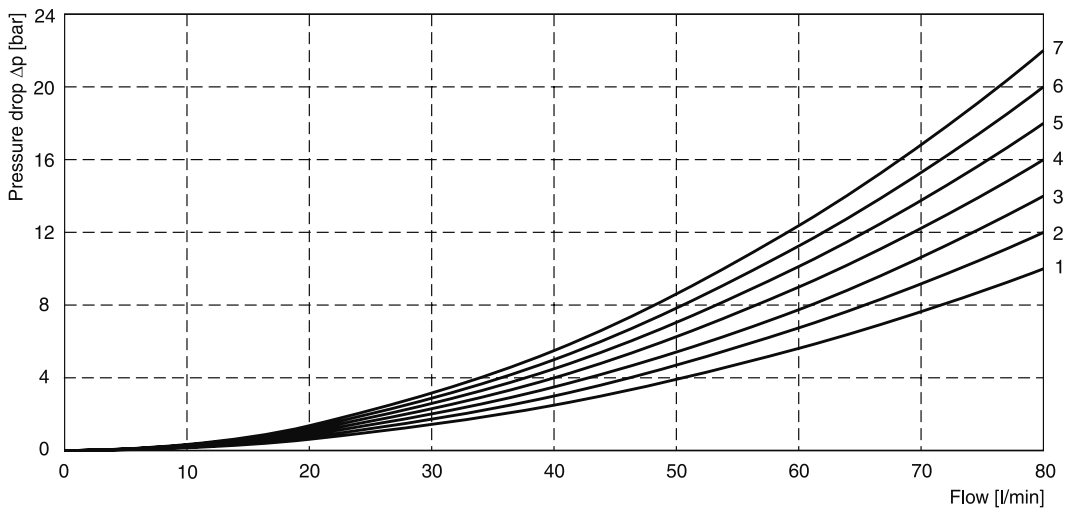

D3DL

	Position „b“		Position „a“		Position „0“					
Spool	P-A	B-T	P-B	A-T	P-A	P-B	A-T	B-T	P-T	A-B
001	4	3	4	3	–	–	–	–	–	–
002	2	4	3	3	2	2	1	2	3	4
004	4	3	3	2	–	–	5	5	–	6
006	2	4	3	3	5	5			–	6
020	4	4	4	4	–	–	–	–	–	–
	P-B	A-T	P-A	B-T	P-A	P-B	A-T	B-T	P-T	A-B
009	2	5	2	6	–	–	–	–	7	–

Flow curve diagram D3DL

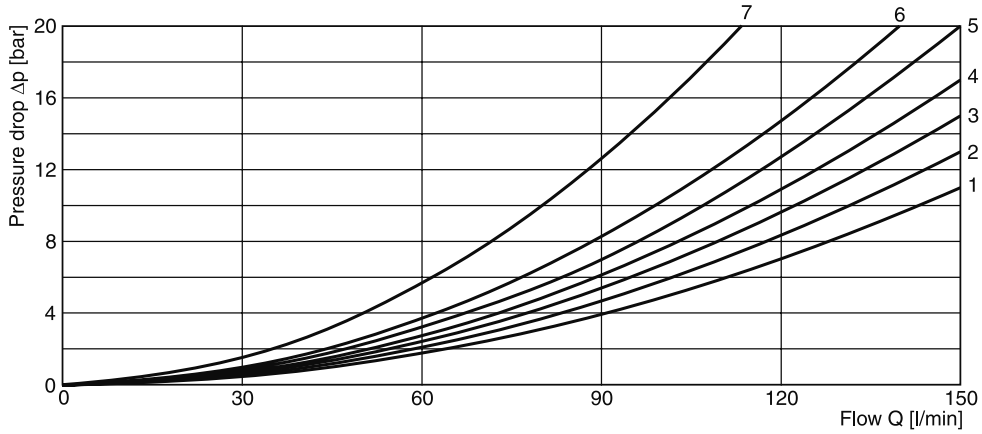

All characteristic curves measured with HLP46 at 50 °C.

D_L UK.indd RH 17.04.2015

The flow curve diagrams show the flow versus pressure drop curves for all spool types. The relevant curve number for each spool type, operating position and flow direction is given in the tables below.

D4L

	Curve number				
Spool	P-A	P-B	P-T	A-T	B-T
001	1	1	–	4	5
002	1	2	6	4	6
003	1	2	–	5	6
004	1	1	–	5	5
006	1	2	–	3	6
007	1	1	6	4	5
009	2	9	8	7	10
011	1	1	–	4	5
014	1	1	6	5	4
015	2	1	–	6	5
020	3	5	–	3	5
030	2	3	–	6	7

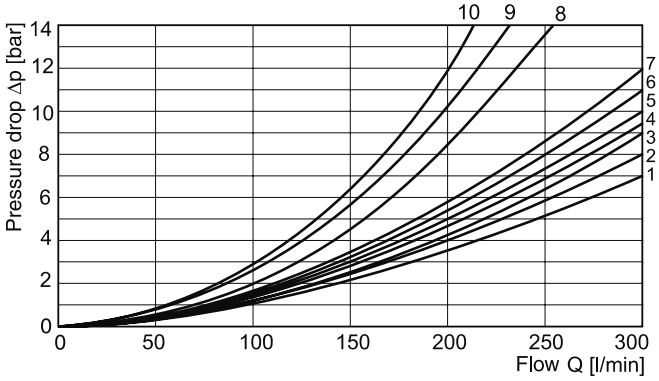

D9L

	Curve number				
Spool	P-A	P-B	P-T	A-T	B-T
001	3	2	-	3	5
002	2	1	1	3	5
003	4	2	-	3	6
004	4	3	-	3	5
007	3	1	7	3	5
009	4	8	9	4	10
014	1	3	7	5	3
015	2	4	-	5	3
020	6	5	-	6	8
030	3	2	-	3	5

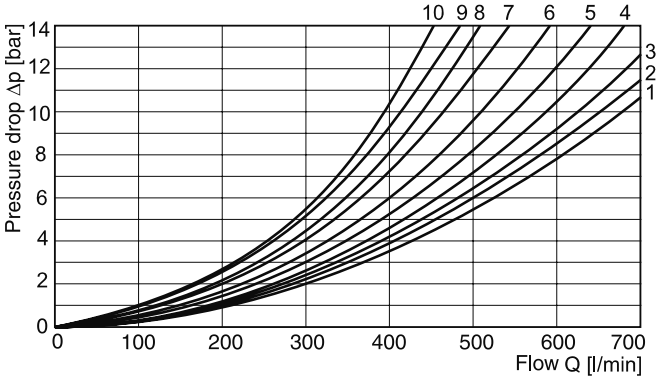

All characteristic curves measured with HLP46 at 50 °C.

2

D1VL*4J

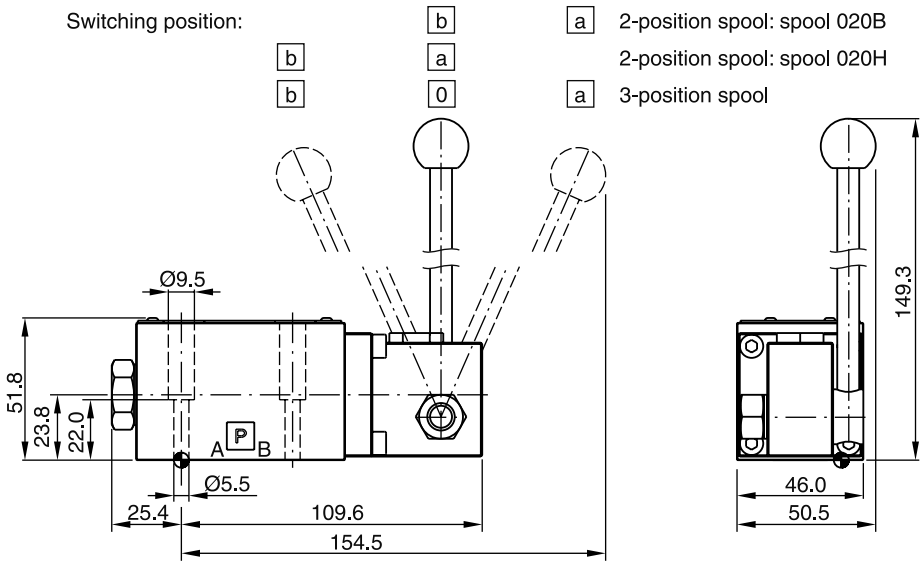

D1VL*4K

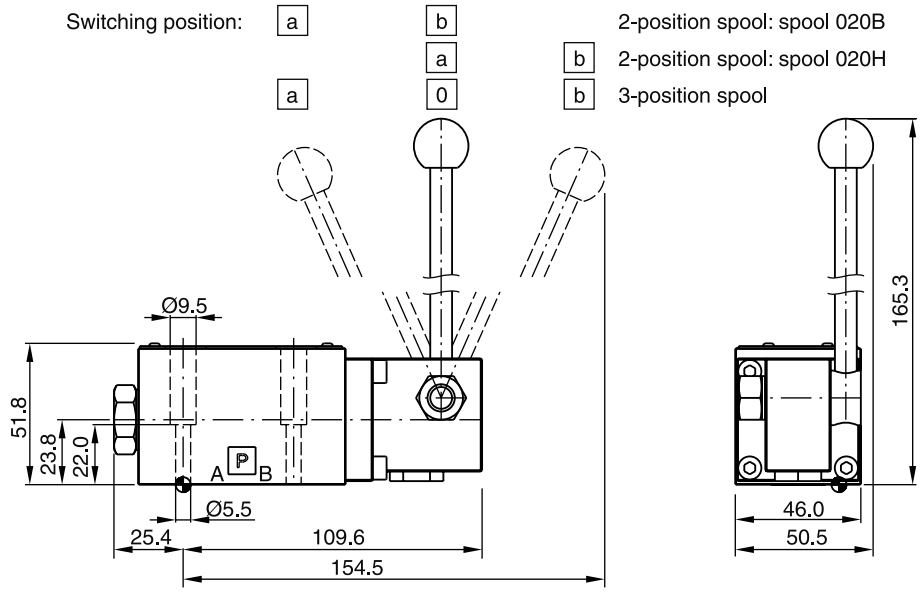

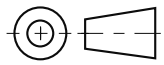

Surface finish	Kit			Kit
R_{max}6.3 ▱ 0.01/100	BK375	4x M5x30 ISO 4762-12.9	7.6 Nm ±15 %	**NBR: SK-D1VL-N-91** FPM: SK-D1VL-V-91

Valid for all styles. Switching position see ordering code.

D_L UK.indd RH 17.04.2015

D1VLB*4J

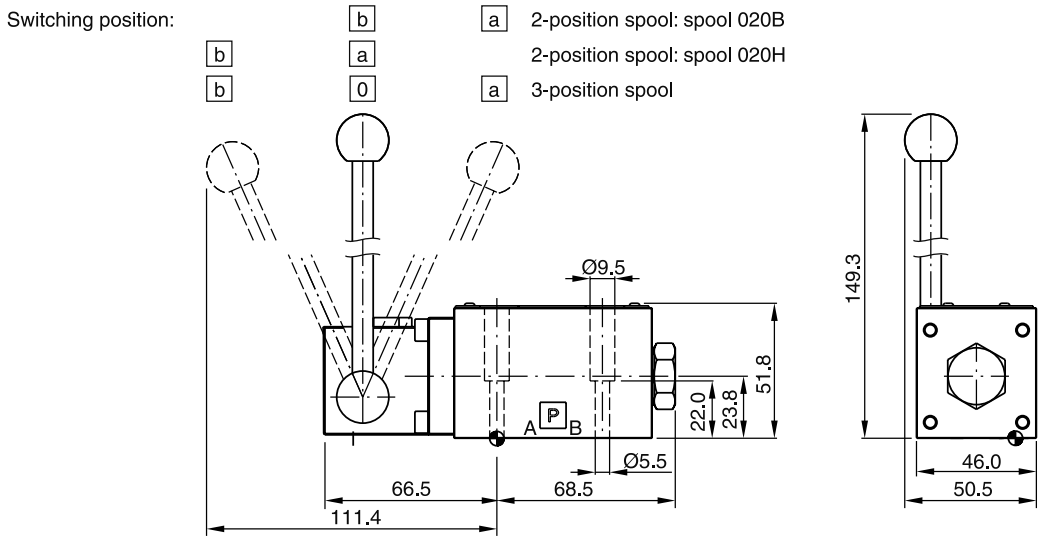

Surface finish	Kit			Kit
R_{max}6.3 ▱ 0.01/100	BK375	4x M5x30 ISO 4762-12.9	7.6 Nm ±15 %	**NBR: SK-D1VL-N-91** FPM: SK-D1VL-V-91

D3DL*4J

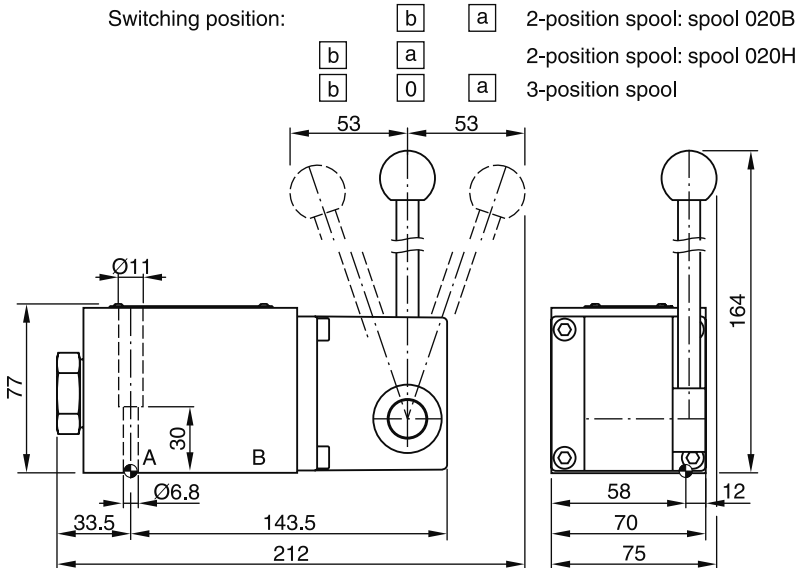

Surface finish	Kit			Kit
R_{max}6.3 ▱ 0.01/100	BK385	4x M6x40 ISO 4762-12.9	13.2 Nm ±15 %	**NBR: SK-D3DL-N-42** FPM: SK-D3DL-V-42

Valid for all styles. Switching position see ordering code.

D_L UK.indd RH 17.04.2015

2

D3DL*4K

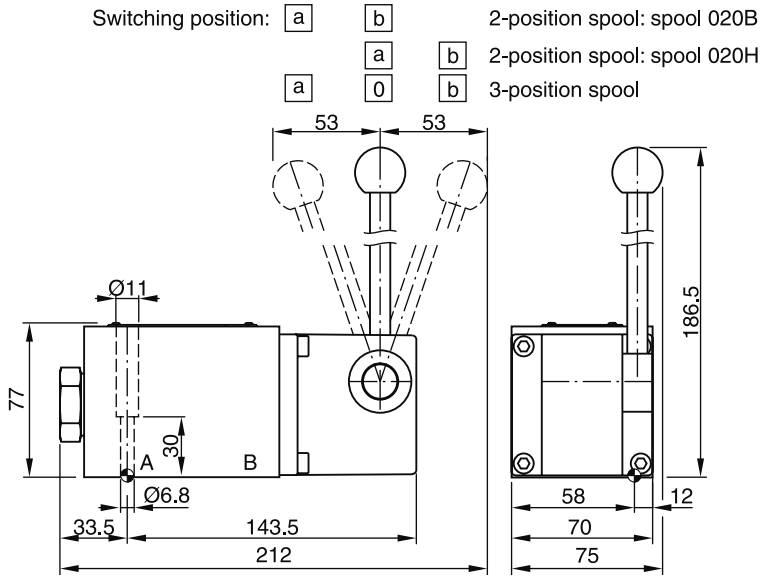

D3DLB*4J

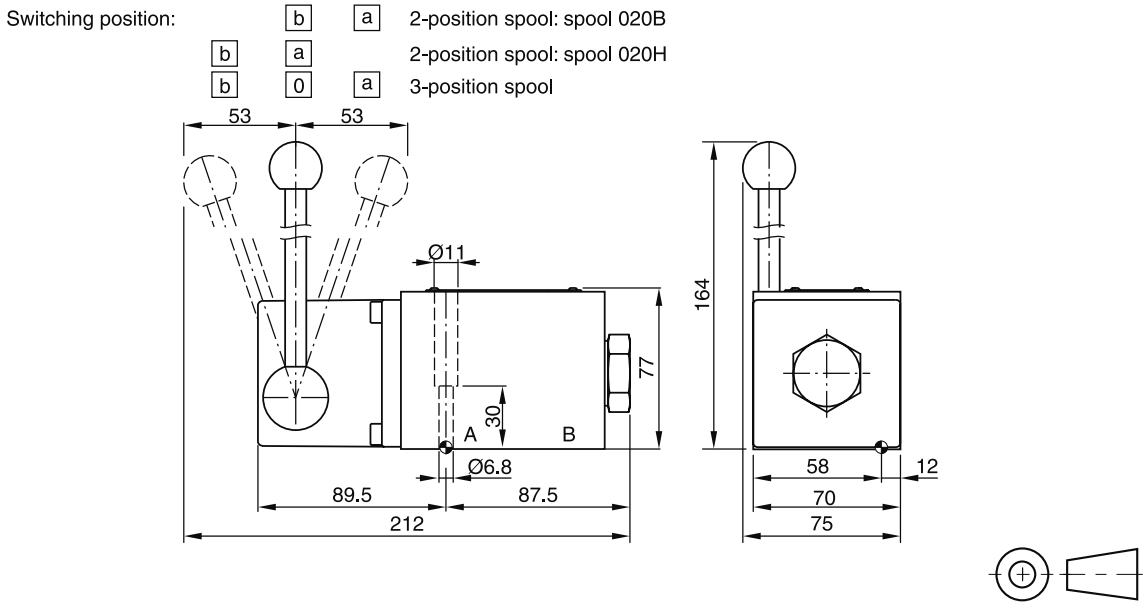

Surface finish	Kit			Kit
R_{max}6.3 ▱ 0.01/100	BK385	4x M6x40 ISO 4762-12.9	13.2 Nm ±15 %	**NBR: SK-D3DL-N-35** FPM: SK-D3DL-V-35

Valid for all styles. Switching position see ordering code.

D_L UK.indd RH 17.04.2015

D4L

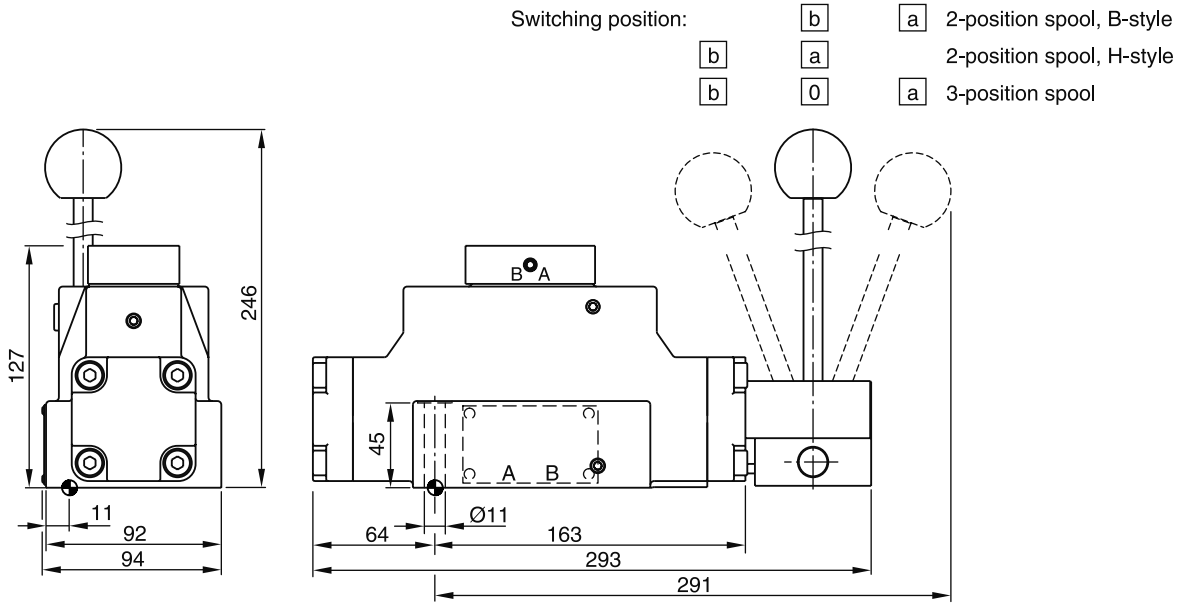

D4LB

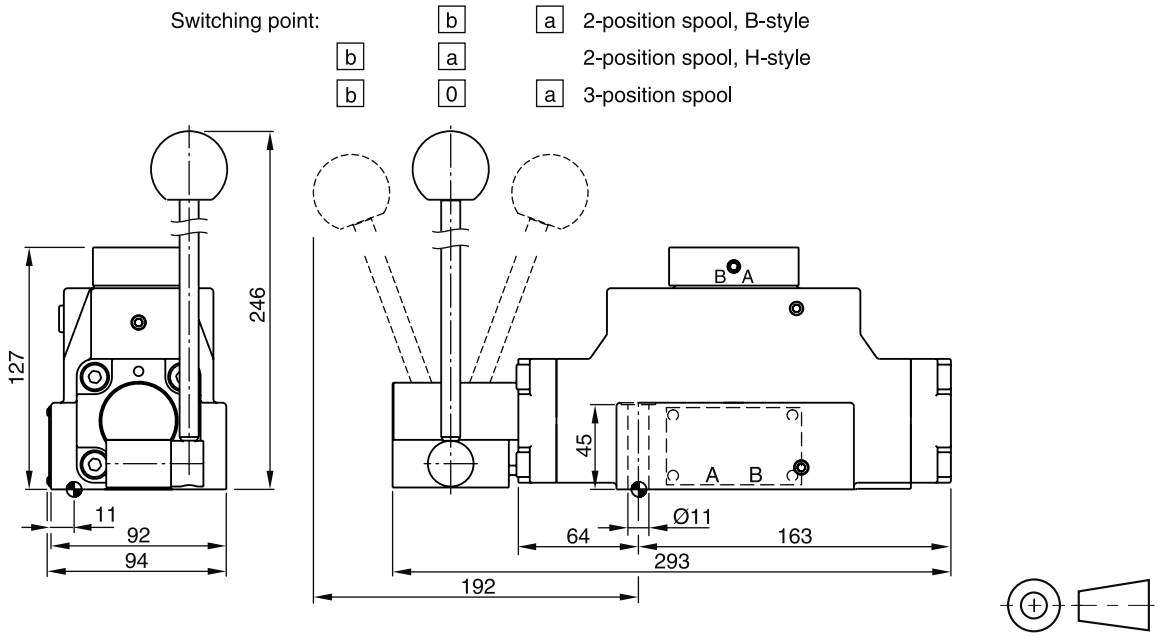

Surface finish	Kit			Kit
R_{max}6.3 ▱ 0.01/100	BK320	4x M10x60 2x M6x55 ISO 4762-12.9	63 Nm 13.2 Nm ±15 %	**NBR: SK-D4L-N-91** FPM: SK-D4L-V-91

Valid for all styles. Switching position see ordering code.

D_L UK.indd RH 17.04.2015

2

D9L

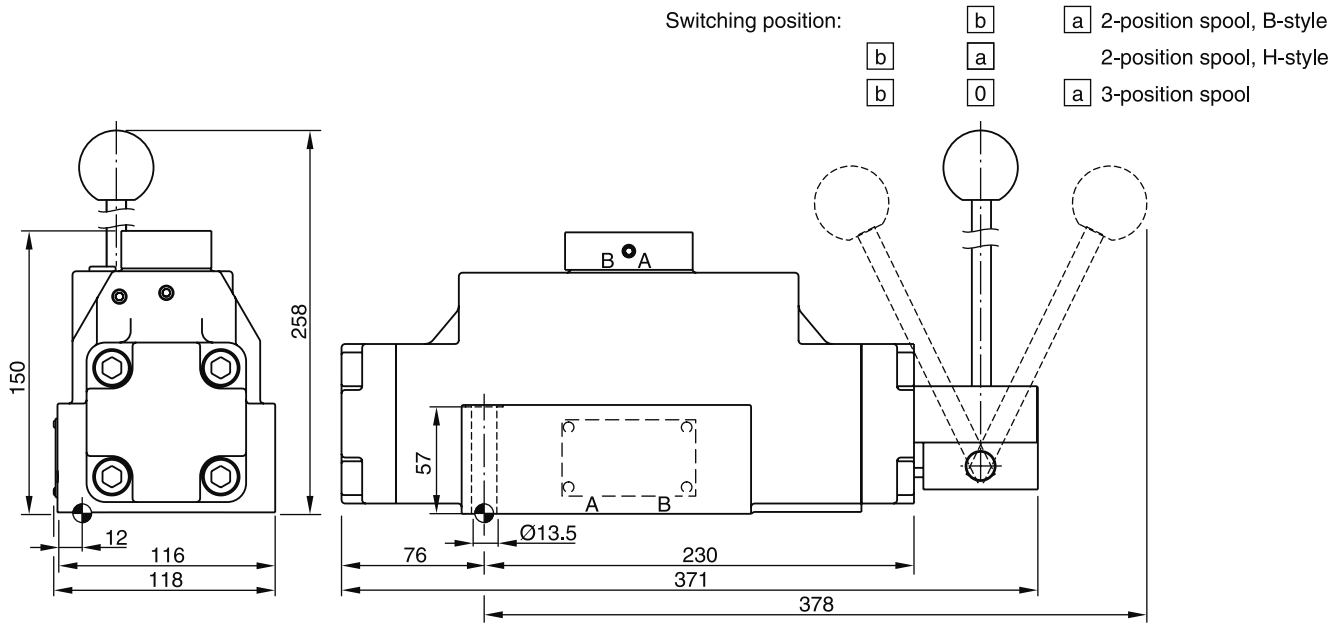

D9LB

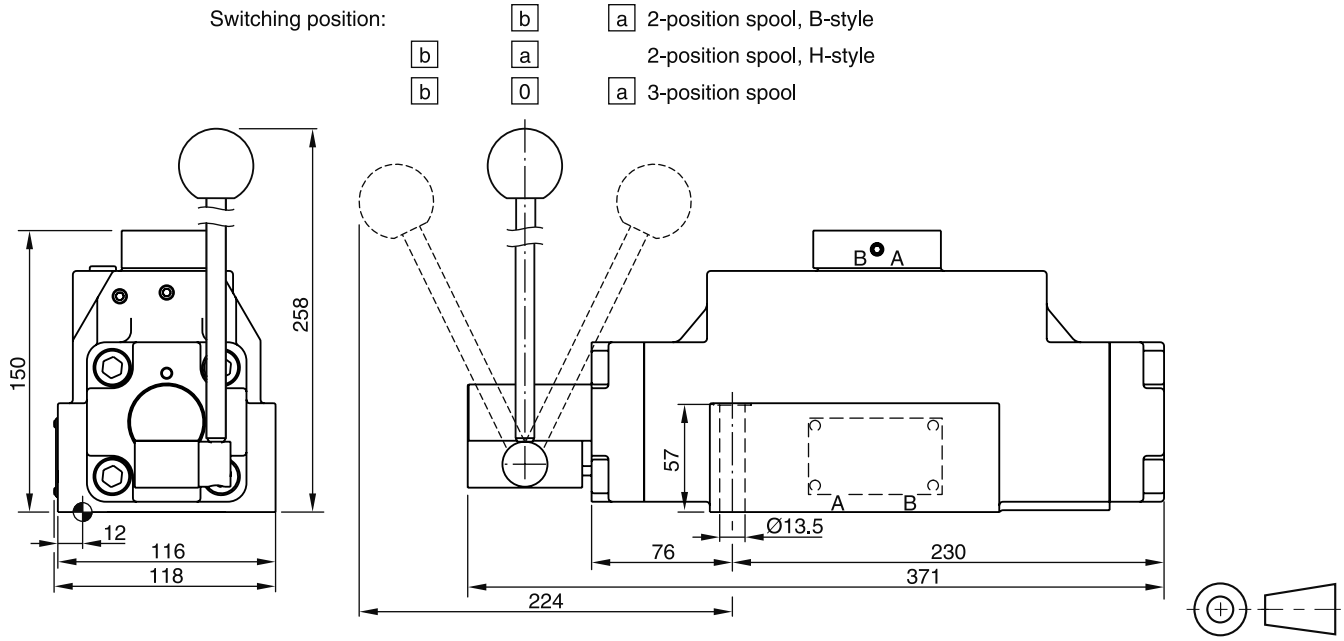

Surface finish	Kit			Kit
R_{max}6.3 ▱ 0.01/100	BK360	6x M12x75 ISO 4762-12.9	108 Nm ±15 %	**NBR: SK-D9L-N-91** FPM: SK-D9L-V-91

Valid for all styles. Switching position see ordering code.

D_L UK.indd RH 17.04.2015

Description	Cable connection	Figure circuit	Order no. black (B)	Order no. grey (A)
Plug EN 175301-803 [1], style AF Protection class IP65 for voltages up to 250V	PG 9 PG 11	Fig. 1	5001710 5001716	5001711 5001717
Plug with LED 24VDC	PG 11	Fig. 1 and 3	5001571	5001572
Plug with lamp insert 120VAC Plug with lamp insert 230VAC		Fig. 1 and 4	5001573 5001575	5001574 5001576
Plug with LED 24VDC and suppressing circuit		Fig. 1 and 5	5001708	5001709
Plug with rectifier: Bridge-type rectifier with silicon diodes. Varistors are used to protect the diodes against power surges from the power supply up to 250VAC.	PG 11	Fig. 1 and 6	5001737	5001738
Plug with cable strain relief and transparent cover		Fig. 2	5001723	5001724
Inserts for plug 5001723 and 5001724		Cicuit	Order no.	
Bridge-type rectifier up to 250VAC 7		7	5001727	
Bridge-type rectifier with lamp 250VAC		8	5001734	

Fig. 1

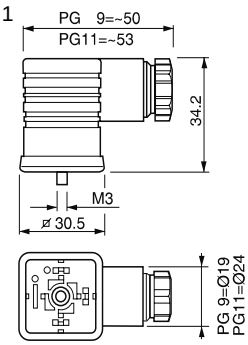

Fig. 2

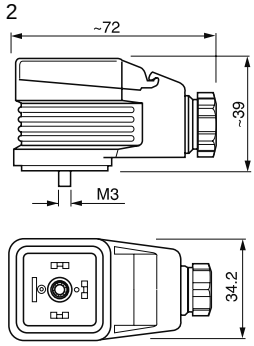

Fig. 3

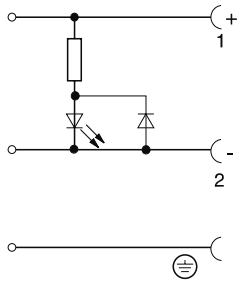

Fig. 4

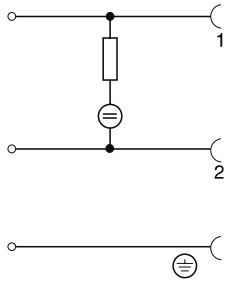

Fig. 5

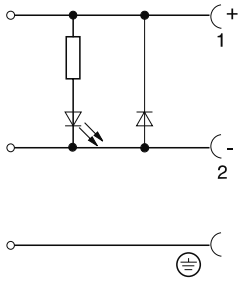

Fig. 6

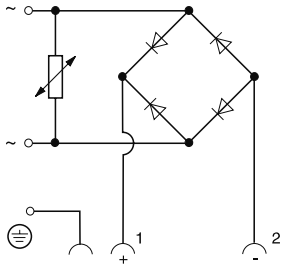

Fig. 7

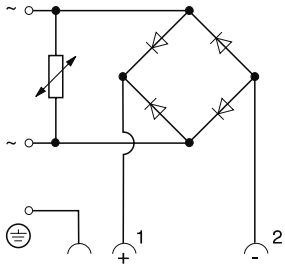

Fig. 8

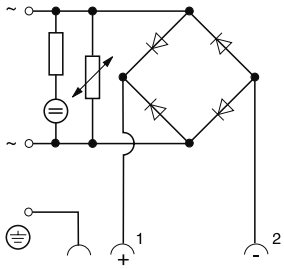

Plug M12x1, order no.: 5004109

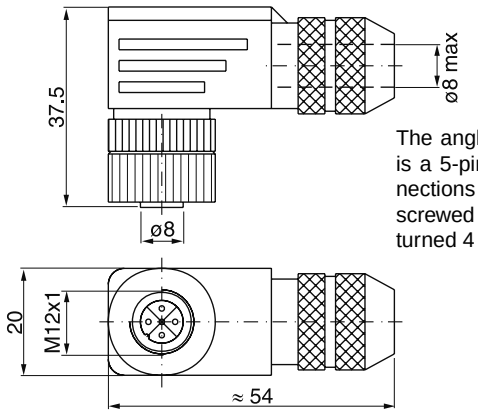

The angled plug for M12x1 is a 5-pin design. The connections in the plug can be screwed in. The plug can be turned 4 x 90°.

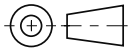

Plug kit 2-pin Junior Timer (AMP)

Order no.	Number of plugs in 1 kit
393 000 K822	1
393 000 K825	10
393 000 K826	50
393 000 K827	100

Plug kit DT04-2P "Deutsch"

Order no.	Number of plugs in 1 kit
45216087	1

[1] (New) EN 175301-803 corresponds to (old) DIN 43650.

Access02.indd RH 17.04.2015

2

Solenoid kit (displayed: **EN plug**)
A solenoid kit contains tube, coil, retainer and seals for the solenoid.

Coil kit
A coil kit contains coil, retainer and seals for the coil.

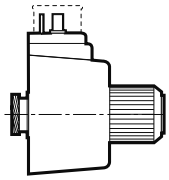
AC

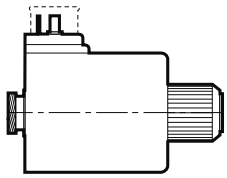
DC

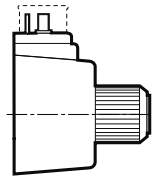
AC

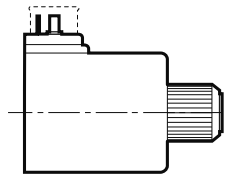
DC

For D1VW standard

Solenoid kits: **AK-D1VWS...** (Soft shift on request) (Example: **AK-D1VWSJW91**)			
Voltage Volt/Hertz	Voltage Code	EN plug D1VW	EN plug without manual override (Code „T“) D1VW
12 V=	K	**KW91**	KWT91
24 V=	J	**JW91**	JWT91
98 V=	U	UW91	UWT91
205 V=	G	GW91	GWT91
110 V/50 Hz / 120 V/60 Hz	Y	**YW91**	–
230 V/50 Hz / 240 V/60 Hz	T	**TW91**	–

Coil kits: **AK-D1VWC...** (Example: **AK-D1VWCJW91**)		
Voltage Volt/Hertz	Voltage Code	EN plug D1VW
12 V=	K	**KW91**
24 V=	J	**JW91**
98 V=	U	UW91
205 V=	G	GW91
110 V/50 Hz / 120 V/60 Hz	Y	**YW91**
230 V/50 Hz / 240 V/60 Hz	T	**TW91**

D1VW 8 Watt

Solenoid kits: **AK-D1VWS...**				Coil kits: **AK-D1VWC...**	
Voltage Volt/Hertz	Voltage Code	EN plug D1VW	M12x1 „DESINA“ (Code „DLJ5“) D1VW	EN plug D1VW	M12x1 „DESINA“ (Code „DLJ5“) D1VW
24 V=	J	JWL91	JDLJ591	**JWL91**	JDLJ591

D3W

Solenoid kits: **AK-D3WS...** (Soft shift on request) (Example: **AK-D3WSJW30**)					Coil kits: **AK-D3WC...**	
Voltage Volt/Hertz	Voltage Code	EN plug D3W	EN plug without manual override (Code „T“) D3W	EN plug with 210bar tank pressure (Code „H“) D3W	EN plug D3W	EN plug without manual override (Code „T“) D3W
12 V= 24 V= 98 V= 205 V=	K J U G	KW30 **JW30** UW30 GW30	KWT30 JWT30 UWT30 GWT30	KW30 JW30 UW30 GW30	KW30 **JW30** UW30 GW30	KWT30 JWT30 UWT30 GWT30
110 V/50 Hz 120 V/60 Hz	Y	**YW30**	–	YWH30	**YW30**	–
230 V/50 Hz 240 V/60 Hz	T	**TW30**	–	TWH30	**TW30**	–

Other solenoids, coil kits and tube kits on request.

Bold letters =
Short-term availability

Access02.indd RH 17.04.2015

O-rings to seal between valve and mounting surface

Valve size	Valve series	Ports	Dimensions inner Ø x section Ø	Quantity [1]
DIN NG06	**D1**	P, A, B, T X, Y	9.25 x 1.78 4.47 x 1.78	4 2
DIN NG10	**D3**	P, A, B, T X, Y	12.42 x 1.78 10.82 x 1.78	5 2
DIN NG16	**D4**	P, A, B, T X, Y	21.89 x 2.62 10.82 x 1.78	4 2
DIN NG25	**D8**	P, A, B, T X, Y	29.82 x 2.62 20.29 x 2.62	4 2
DIN NG25	**D9**	P, A, B, T X, Y	34.59 x 2.62 20.29 x 2.62	4 2
DIN NG32	**D11**	P, A, B, T X, Y	53.57 x 3.53 14.00 x 1.78	4 2

Seal kits (connecting surface and inner seals)
Spool valves

Valve series	Material	Order code for valve size						
		D1	D3	D31	D4	D8	D9	D11
D**W Solenoid	NBR	SK-D1VW-N-91	SK-D3W-N-30	–	SK-D41VW-N-91	SK-D81VW-N-91	SK-D91VW-N-91	SK-D111VW-N-91
	FPM	SK-D1VW-V-91	SK-D3W-V-30	–	SK-D41VW-V-91	SK-D81VW-V-91	SK-D91VW-V-91	SK-D111VW-V-91
D*DW Solenoid	NBR	–		SK-D31DW-N-91	–			
	FPM			SK-D31DW-V-91				
D*NW Solenoid	NBR			SK-D31NW-N-91				
	FPM			SK-D31NW-V-91				
D**P Hydr.	NBR	–	SK-D3DP-N-35	–	SK-D41VW-N-91	–	SK-D91VW-N-91	SK-D111VW-N-91
	FPM	–	SK-D3DP-V-35	–	SK-D41VW-V-91	–	SK-D91VW-V-91	SK-D111VW-V-91
D1VP*90 Hydr.	NBR	SK-D1VP-N-87	–					
	FPM	SK-D1VP-V-87						
D1VP*4L Hydr.	NBR	SK-D1VP-N4L-91						
	FPM	SK-D1VP-V4L-91						
D*L/LB Hand lever	NBR	SK-D1VL-N-91	SK-D3DL-N-35	–	SK-D4L-N-91	–	SK-D9L-N-91	–
	FPM	SK-D1VL-V-91	SK-D3DL-V-35	–	SK-D4L-V-91	–	SK-D9L-V-91	–

Seated valve

Valve series	Material	D1SE
D1SE Solenoid	NBR	SK-D1SE-70
	FPM	SK-D1SE-V70

[1] Number per set

Access02.indd RH 17.04.2015

2

Slip-in orifice for P, A, B port of directional control valves NG06 and NG10

DK — ☐ ☐

Orifice kit | Size | Orifice size

Code	Size
D1VW91	NG06
D3W31	NG10

Code	Orifice Ø	NG6	NG10
00	without orifice	x	x
06	0.6 mm	x	
08	0.8 mm	x	x
09	0.9 mm	x	
10	1.0 mm	x	x
11	1.1 mm	x	
12	1.2 mm	x	x
14	1.4 mm	x	x
15	1.5 mm	x	x
18	1.8 mm	x	
20	2.0 mm	x	x
25	2.5 mm	x	x
30	3.0 mm		x
45	4.5 mm		x

The orifice kit DK-D1VW91 includes special O-rings (NBR - black and FPM - green) which have to be used with the orifice.
Package size: Each kit contains 10 orifices of the same size.

Dimensions

NG06

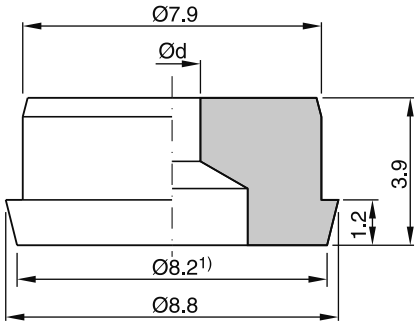

NG10

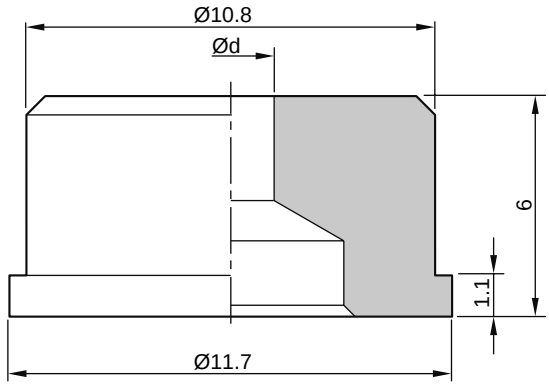

[1)] Only for ports P, A, B with max. dia. 7.5 mm.

Size 6, mounting pattern to ISO 4401-03-03-0-05

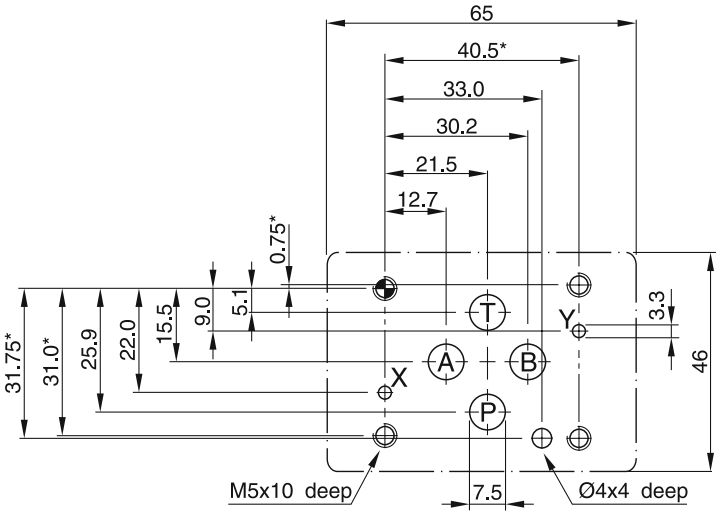

Size 10, mounting pattern to ISO 4401-05-05-0-05

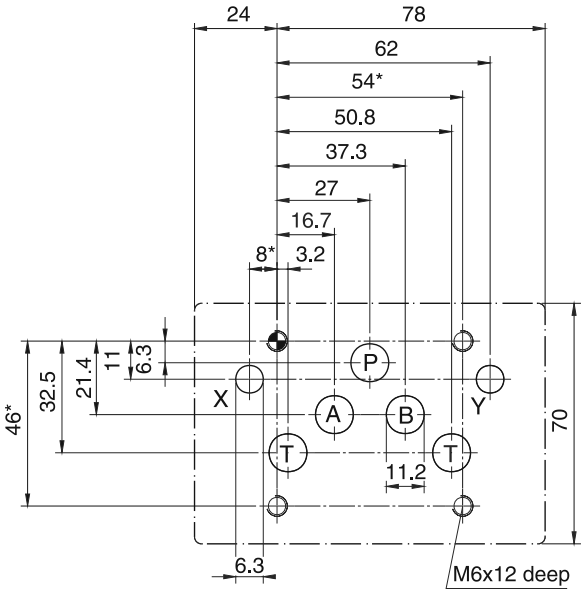

Deviating from ISO 4401
these diameters are possible:
X, Y = Ø 8 max.

Size 16, mounting pattern to ISO 4401-07-07-0-05

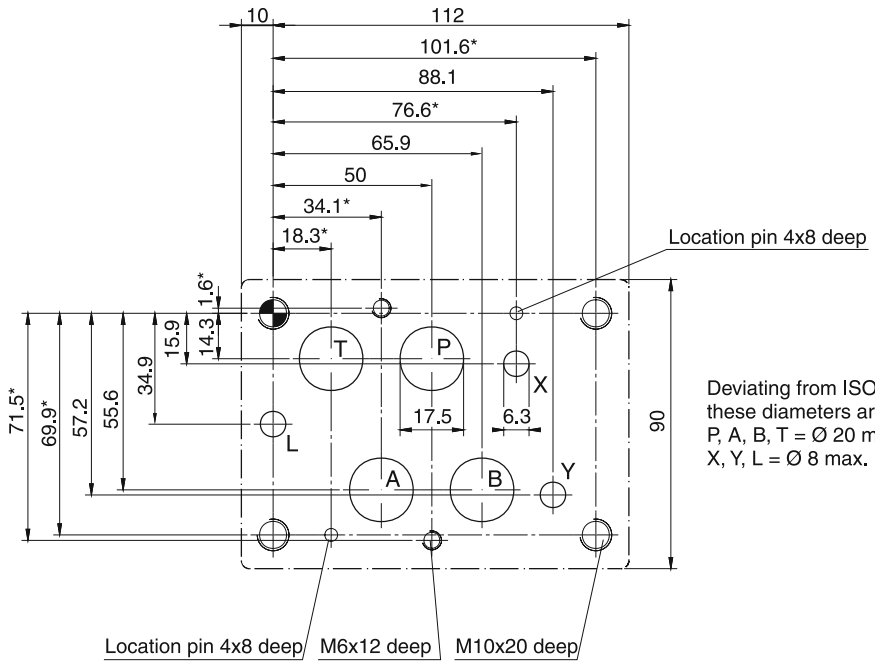

Deviating from ISO 4401
these diameters are possible:
P, A, B, T = Ø 20 max.
X, Y, L = Ø 8 max.

With * marked dimensions ± 0.1 mm. All other dimensions ± 0.2 mm.

Subplates and manifolds see chapter 12.

Size 25, mounting pattern to ISO 4401-08-08-0-05

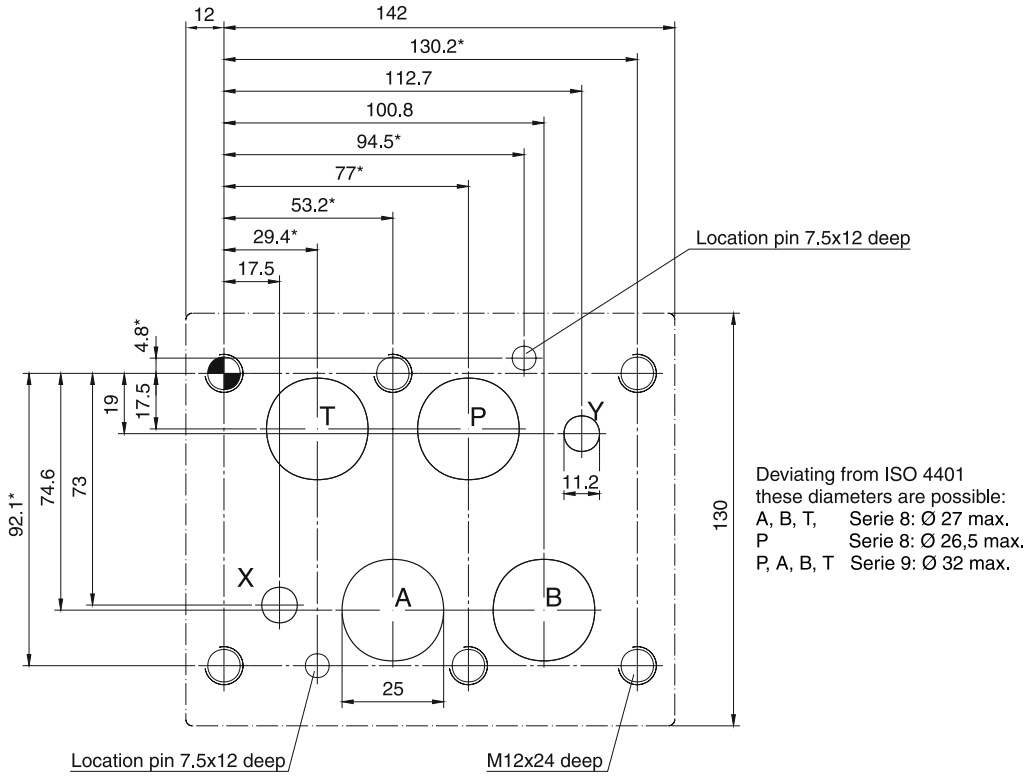

Size 32, mounting pattern to ISO 4401-10-09-0-05

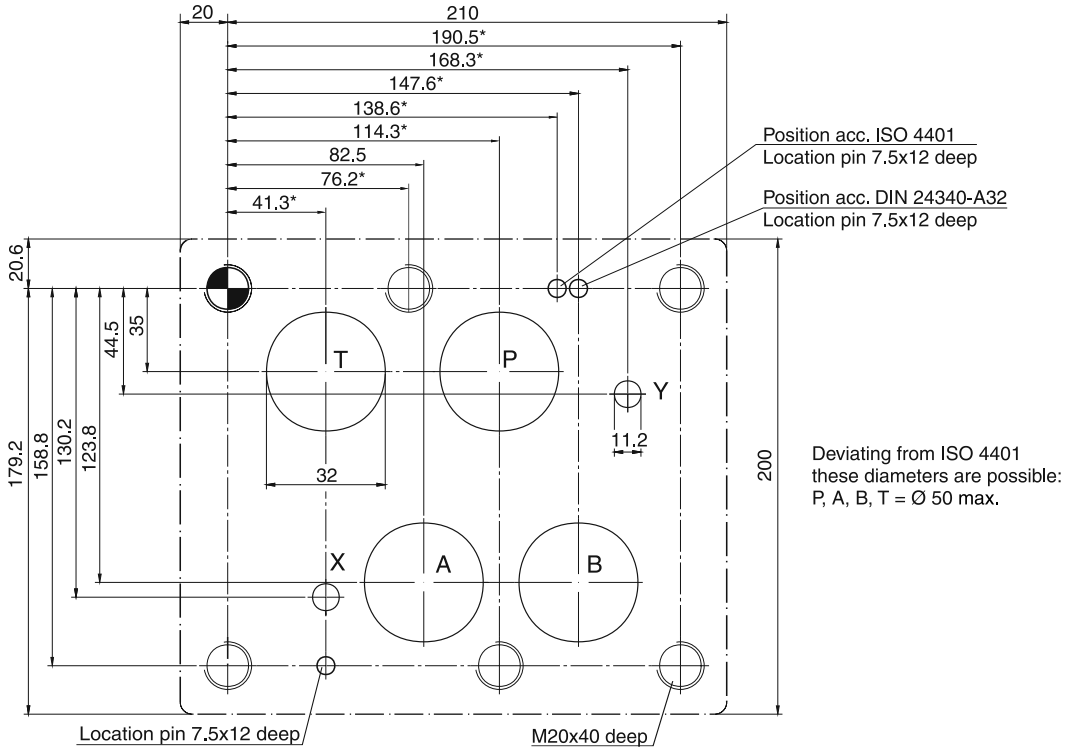

With * marked dimensions ± 0.1 mm. All other dimensions ± 0.2 mm.

Subplates and manifolds see chapter 12.

Access02.indd RH 17.04.2015

Series	Description	Size	Oper-ation		Elec-tronics		LVDT	Spool Design			Page
		DIN/ISO	direct	pilot	external	onboard		Overlap	Zero lap	Spool/ sleeve	
Introduction											3-2
	Standard										
D1FB		NG06	•		•			•	optional	optional	3-3
D1FB OBE		NG06	•			•		•	optional	optional	
D3FB		NG10	•		•			•		optional	3-14
D3FB OBE		NG10	•			•		•		optional	
D1FB CANopen		NG06	•			•		•		optional	3-24
D3FB CANopen		NG10	•			•		•		optional	
D31FB		NG10		•	•			•			3-34
D31FB OBE		NG10		•		•		•			
D41FB		NG16		•	•			•			
D41FB OBE		NG16		•		•		•			
D91FB		NG25		•	•			•			
D91FB OBE		NG25		•		•		•			
D111FB		NG32		•	•			•			
D111FB OBE		NG32		•		•		•			
D1FV*3	Pilot valve	NG06	•		•			•			3-50
D1FV*3 OBE	Pilot valve	NG06	•			•		•			
	High repeatability										
D1FC		NG06	•			•	•	•			3-58
D3FC		NG10	•			•	•	•			3-65
D31FC		NG10		•		•	•	•			3-72
D41FC		NG16		•		•	•	•			
D91FC		NG25		•		•	•	•			
D111FC		NG32		•		•	•	•			
D*FC, D*1FC	EtherCAT		•	•		•	•	•			3-83
	VCD® performance*, for closed loop applications										
D1FP		NG06	•			•	•	•	•	•	3-86
D3FP		NG10	•			•	•	•	•	•	3-93
D30FP		NG10		•		•	•	•	•		3-100
D31FP		NG10		•		•	•	•	•		3-107
D41FP		NG16		•		•	•	•	•		
D91FP		NG25		•		•	•	•	•		
D111FP		NG32		•		•	•	•	•		
D*FP, D*1FP	EtherCAT		•	•		•	•	•	•	•	3-118
	Accessories										
	Plug-in connectors										3-121
	Actuator kits / coil kits										3-122
	Mounting patterns										3-123

* VCD® = Voice Coil Drive technology

Introduction: Proportional DC Valves

Proportional valves and servo proportional valves are characterized by a number of design features that determine their quality to fit into different applications. The main features are listed below.

Solenoid drive (proportional valves):
Solenoids operate unidirectionally against a spring, provide high force and are - because of high inductance - limited in their dynamics.

Voice Coil Drive® :
A moving coil in the field of a static permanent magnet operates bi-directionally. Springs are only needed to ensure the power-down position. The low inductance allows highest dynamics.

External electronics:
Valves without integrated electronics are less sensitive to vibration and high temperature. LVDTs always include integrated electronics.

Integrated electronics (onboard electronics - OBE):
Onboard electronics simplifies the installation and improves the repeatability from valve to valve.

LVDT (spool position feedback):
Closed loop control of the spool position improves the sensitivity and accuracy.

Direct operated (d.o.):
High hydraulic output can be achieved with low electric power input.

Pilot operated (p.o.):
Beyond the functional limits of direct operated valves hydraulic amplification is required.

Positive spool overlap:
To avoid load drifting in the zero position, spools with positive overlap are used.

Zero lap spools:
In closed loop circuits zero lap spools are used for an effective control of the spool at low position errors.

Spool/sleeve design:
For minimal hysteresis, high precision, and better wear resistance, the spool/sleeve design is preferred over the spool/body design.

Regenerative valves:
In applications with differential cylinders it is common to feed the return flow from the rod side of the cylinder back to the piston side to achieve higher velocity or lower pump flow. Parker differentiates between regeneration to the pressure level of the pump (P-regeneration) or directly to the piston area respectively the A-port of the valve (A-regeneration). The Parker regenerative valves use the advantageous A-regeneration.

Hybrid valves:
Regenerative valves with an integrated solenoid valve - to switch to the standard mode - are called Hybrid Valves at Parker. The regenerative mode is used for maximum velocity, the standard mode for maximum force.

Regenerative and hybrid valves are also available as on/off directional control valves.

The proportional directional valves D1FB (NG06) are available with and without onboard electronics (OBE).

D1FB OBE:

The digital onboard electronics is situated in a robust metal housing, which allows the usage under rough environmental conditions.

The nominal values are factory set. The cable connection to a serial RS232 interface is available as accessory.

D1FB for external electronics:

The parameters can be saved, changed and duplicated in combination with the digital power amplifier PWD00A-400.

The valve parameters can be edited with the common ProPxD software for both versions.

The D1FB valves can be ordered with spool/sleeve design (D1FB*0) for maximum precision as well as spool/body design (D1FB*3) for high nominal flow - see functional limit curves for maximum flow capability.
Valves with explosion proof solenoids Ex e mb II see catalogue HY11-3343.
Download: www.parker.com/euro_hcd - see “Literature”

D1FB

D1FB OBE

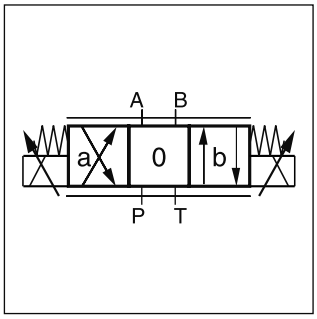

D1FB

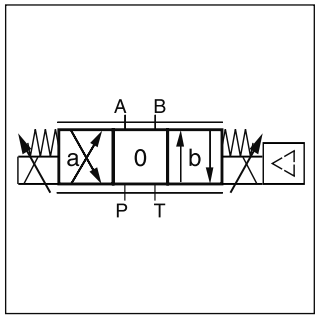

D1FB OBE

Features

- Spool/sleeve and spool/body
- 3 command options for D1FB OBE:
  +/- 10 V, 4…20 mA, +/- 20 mA
- High repeatability from valve to valve
- Low hysteresis
- Manual override
- Digital onboard electronics
- Zero lap spools for the usage in simple closed loop systems

D1FB*0 OBE
Spool/sleeve design

D1FB*3 OBE
Spool/body design

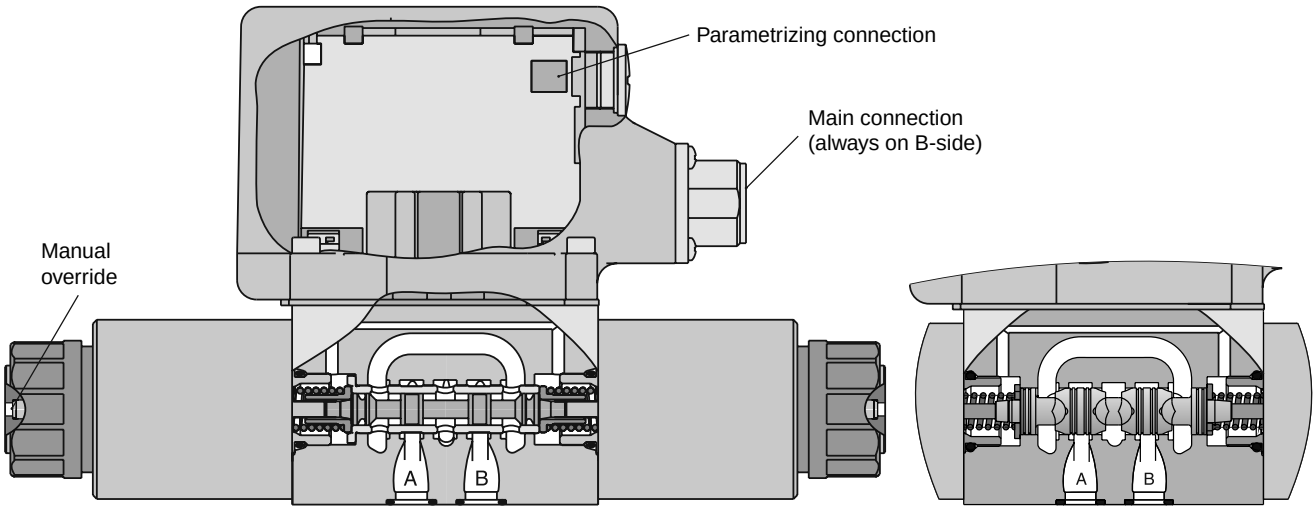

3

D1FB

D	1	F	B			0	N				
Directional control valve	**Size DIN NG06 CETOP 03 NFPA D03**	**Proportional control**	**Standard dynamics standard repeatability**	**Spool type**	**Spool position**		**Seals NBR** (other seal compounds on request)	**Solenoid**	**Connector**	**Design**	**Design series** (not required for ordering)

D1FB*0: Spool/sleeve design		
Code	Spool type	Flow [l/min] at Δp 5 bar per metering edge
Overlap		
E01C **E01F** **E01H**	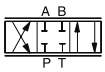	**6** **12** **20**
E02C **E02F** **E02H**		**6** **12** **20**
E03C **E03F** **E03H**		**6** **12** **20**
B31F **B31H**	$Q_B = Q_A/2$	**12 / 6** **20 / 10**
B32F **B32H**	$Q_B = Q_A/2$ 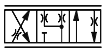	**12 / 6** **20 / 10**
Zero lap [1]		
Code	Spool type	Flow [l/min] at Δp 35 bar per metering edge
E50C **E50F** **E50H**		**6** **12** **20**
B60F **B60H**	$Q_B = Q_A/2$	**12 / 6** **20 / 10**

D1FB*3: Spool/body design		
Code	Spool type	Flow [l/min] at Δp 5 bar per metering edge
Overlap		
E01F **E01H** **E01K**	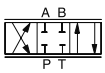	**10** **20** **30**
E02F **E02H** **E02K**		**10** **20** **30**
B31F **B31H** **B31K**	$Q_B = Q_A/2$ 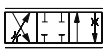	**10 / 5** **20 / 10** **30 / 15**
B32F **B32H** **B32K**	$Q_B = Q_A/2$	**10 / 5** **20 / 10** **30 / 15**

Code	Design
0	**Spool/sleeve design**
3	**Spool/body design**

Code	Connector
W [2]	**Connector as per EN 175301-803**
J [2] [3]	**Connector DT04-2P "Deutsch"**

D1FB*0: Spool/sleeve design	
Code	Solenoid
M	**9 V / 2.7 A**
J	**24 V / 0.8 A**

D1FB*3: Spool/body design	
Code	Solenoid
K	**12 V / 2.2 A**
J	**24 V / 1.1 A**

Code	Design
C	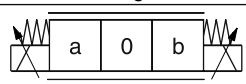
E	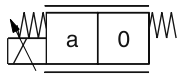
K	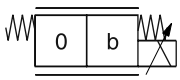

Short delivery time for all variations

[1] Only for spool position code C. No defined spool positioning at power down.
[2] Please order connector separately, see chapter 3 accessories.
[3] Not for spool/sleeve design.

D1FB UK.indd RH 17.04.2015

D1FB OBE (with onboard electronics)

D	1	F	B			0	N				
Directional control valve	**Size DIN NG06 CETOP 03 NFPA D03**	**Proportional control**	**Standard dynamics standard repeatability**	**Spool type**	**Spool position**		**Seals NBR** (other seal compounds on request)	**Input signal**	**Options**	**Design**	**Design series** (not required for ordering)

D1FB*0: Spool/sleeve design		
Code	Spool type	Flow [l/min] at Δp 5 bar per metering edge
Overlap		
E01C **E01F** **E01H**	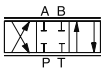	**6** **12** **20**
E02C **E02F** **E02H**	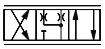	**6** **12** **20**
E03C **E03F** **E03H**		**6** **12** **20**
B31F **B31H**	$Q_B = Q_A/2$	**12 / 6** **20 / 10**
B32F **B32H**	$Q_B = Q_A/2$	**12 / 6** **20 / 10**
Zero lap [1]		
Code	Spool type	Flow [l/min] at Δp 35 bar per metering edge
E50C **E50F** **E50H**		**6** **12** **20**
B60F **B60H**	$Q_B = Q_A/2$ 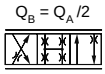	**12 / 6** **20 / 10**

D1FB*3: Spool/body design		
Code	Spool type	Flow [l/min] at Δp 5 bar per metering edge
Overlap		
E01F **E01H** **E01K**	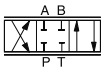	**10** **20** **30**
E02F **E02H** **E02K**		**10** **20** **30**
B31F **B31H** **B31K**	$Q_B = Q_A/2$ 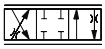	**10 / 5** **20 / 10** **30 / 15**
B32F **B32H** **B32K**	$Q_B = Q_A/2$	**10 / 5** **20 / 10** **30 / 15**

Code	Design
0	**Spool/sleeve design**
3	**Spool/body design**

Code	Input signal [3]	Function	Port	Options
F0	**0...+/-10 V**	**0...+10 V > P-A**	**6 + PE**	**Potentiometer supply**
G0	**0...+/-20 mA**	**0...+20 mA > P-A**	**6 + PE**	**—**
S0	**4...20 mA**	**12...20 mA > P-A**	**6 + PE**	**—**
W5 [2]	**0...+/-10 V** **4...20 mA**	**0...+10 V > P-A** **12...20 mA > P-A**	**11 + PE**	**Command channel & potentiometer supply**

Code	Design
C	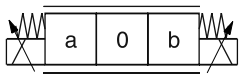
E	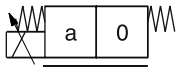
K	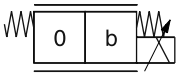

Please order connector separately, see chapter 3 accessories.
Parametrizing cable OBE → RS232: Item no. 40982923

Short delivery time for all variations

[1] Only for spool position code C. No defined spool positioning at power down.
[2] Factory set ± 10 V on delivery.
[3] Single solenoid always 0...+10 V respectively 4...20 mA.

D1FB UK.indd RH 17.04.2015

3

General				
Design		Direct operated proportional DC valve		
Actuation		Proportional solenoid		
Size		NG06/CETOP 03/NFPA D03		
Mounting interface		DIN 24340 / ISO 4401 / CETOP RP121 / NFPA		
Mounting position		unrestricted		
Ambient temperature	[°C]	-20...+60		
$MTTF_D$ value [1]	[years]	150		
Weight (OBE)	[kg]	2.2 (2.9)		
Vibration resistance	[g]	10 Sinus 5...2000 Hz acc. IEC 68-2-6 30 Random noise 20...2000 Hz acc. IEC 68-2-36 15 Shock acc. IEC 68-2-27		
Hydraulic				
Max. operating pressure	[bar]	Ports P, A, B 350; Port T 210		
Max. pressure drop PABT / PBAT	[bar]	350		
Fluid		Hydraulic oil according to DIN 51524 ... 535, other on request		
Fluid temperature	[°C]	-25...+60		
Viscosity permitted recommended	[cSt] / [mm^2/s] [cSt] / [mm^2/s]	20...400 30...80		
Filtration		ISO 4406 (1999); 18/16/13		
Nominal flow at Δp = 5 bar per control edge [2]	[l/min]	**D1FB*0 (Spool/sleeve)** 6 / 12 / 20	**D1FB*3 (Spool/body)** 10 / 20 / 30	
Leakage at 100 bar	[ml/min]	<50 (overlapped spool); <400 (zerolapped spool)	<60	
Opening point (OBE)	[%]	see flow characteristics (set to 10 command signal)		
Static / Dynamic				
Step response at 100 % step	[ms]	30	30	
Hysteresis	[%]	<4	<6	
Temperature drift solenoid current	[%/K]	<0.02		
Electrical characteristics				
Duty ratio	[%]	100 ED; CAUTION: Coil temperature up to 150 °C possible		
Protection class		Standard (as per EN 175301-803) IP65 in accordance with EN 60529 (with correctly mounted plug-in connector) DT04-2P “Deutsch“ IP69K (with correctly mounted plug-in connector)		
Solenoid		**Code "M"**	**Code "K"**	**Code "J" (Spool/sleeve)**
Supply voltage	[V]	9	12	24
Current consumption	[A]	2.7	2.2	1.1 (0.8)
Resistance	[Ohm]	2.7	4.4	18.6
Solenoid connection		Connector as per EN 175301-803 (code W), DT04-2P “Deutsch“ connector (code J). Solenoid identification as per ISO 9461.		
Wiring min.	[mm²]	3x1.5 (AWG 16) overall braid shield (Code W), "Deutsch" connector DP4 2-Pin (Code J)		
Wiring lenght max.	[m]	50		

[1] If valves with onboard electronics are used in safety-related parts of control systems, in case the safety function is requested, the valve electronics voltage supply is to be switched off by a suitable switching element with sufficient reliability.

[2] Flow rate for different Δp per control edge: $Q_x = Q_{Nom.} \cdot \sqrt{\frac{\Delta p_x}{\Delta p_{Nom.}}}$

Electrical characteristics OBE		
Duty ratio	[%]	100 ED; CAUTION: Coil temperature up to 150 °C possible
Protection class		IP65 in accordance with EN 60529 (with correctly mounted plug-in connector)
Supply voltage/ripple DC	[V]	18...30, ripple < 5 % eff., surge free
Current consumption max.	[A]	2.0
Pre fusing medium lag	[A]	2.5
Input signal		
Codes F0 & W5 voltage	[V]	+10...0...-10, ripple < 0.01 % eff., surge free, Ri = 100 kOhm, 0...+10 V ⇒ P -> A
Codes S0 & W5 current	[mA]	4...12...20, ripple < 0.01 % eff., surge free, Ri = 200 Ohm, 12...20 mA ⇒ P -> A < 3.6 mA = enable off, > 3.8 mA = enable on (acc. to NAMUR NE43)
Code G0	[mA]	+20...0...-20, ripple < 0.01 % eff., surge free, Ri = 200 Ohm, 0...+20 mA ⇒ P -> A
Differential input max.		
Codes F0, G0 & S0	[V]	30 for terminal D and E against PE (terminal G) 11 for terminal D and E against 0V (terminal B)
Code W5	[V]	30 for terminal 4 and 5 against PE (terminal PE) 11 for terminal 4 and 5 against 0V (terminal 2)
Channel recall signal	[V]	0...2.5: off / 5...30: on / Ri = 100 kOhm
Adjustment ranges Min	[%]	0...50
Max	[%]	50...100
Ramp	[s]	0...32.5
Interface		RS 232, parametrizing connection 5pole
EMC		EN 61000-6-2, EN 61000-6-4
Central connection		
Codes F0, G0 & S0		6 + PE acc. to EN 175201-804
Code W5		11 + PE acc. to EN 175201-804
Wiring min.		
Codes F0, G0 & S0	[mm²]	7 x 1.0 (AWG16) overall braid shield
Code W5	[mm²]	11 x 1.0 (AWG16) overall braid shield
Wiring length max.		50

3

3

Flow characteristics
D1FB*0 external electronics
at Δp = 5 bar per metering edge
Spool type E01/02/03, B31/32

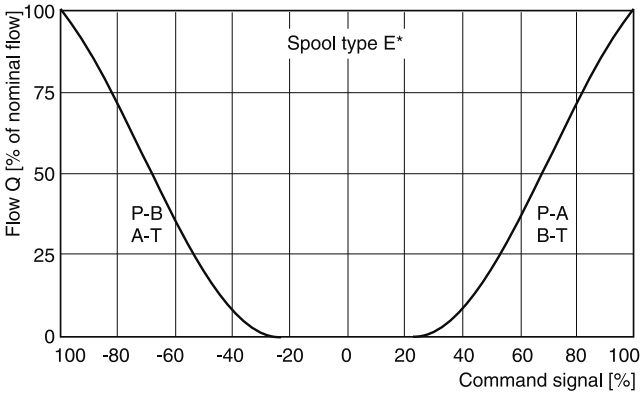

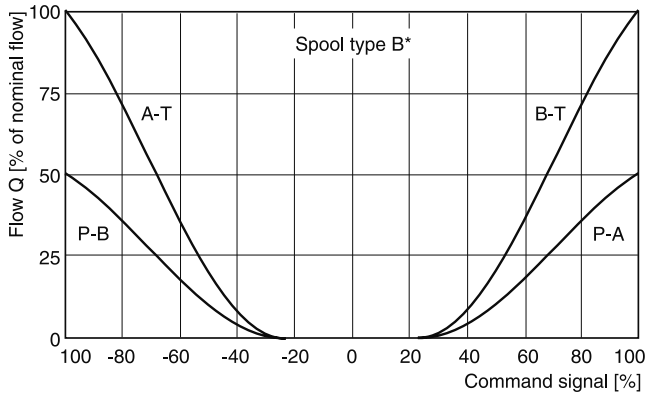

D1FB*0 OBE
(set to opening point 10 %)
at Δp = 5 bar per metering edge
Spool type E01/02/03, B31/32

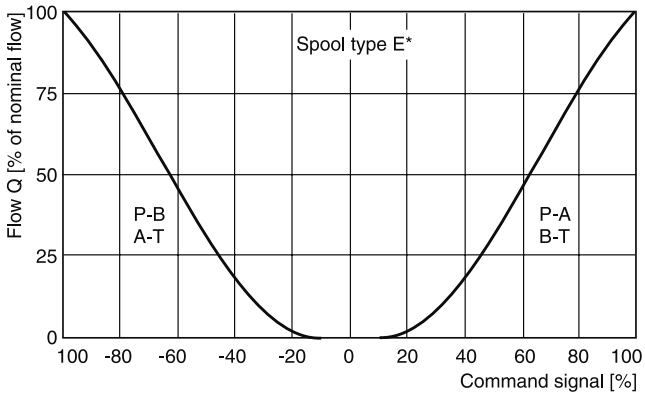

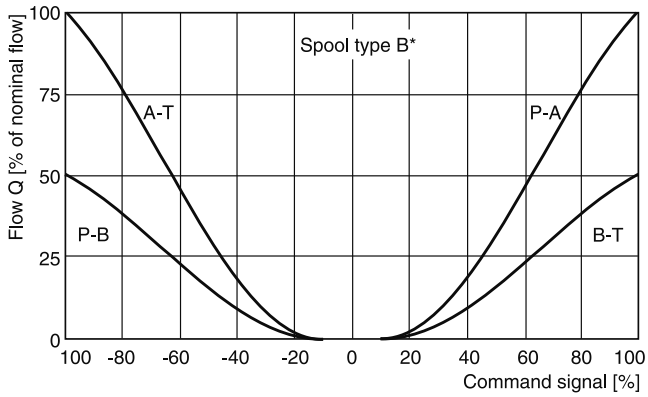

Functional limits
at 25 %, 50 %, 75 % and 100 % command signal (symmetric flow)

At asymmetric flow a reduced flow limit has to be considered.

Spool type E01H

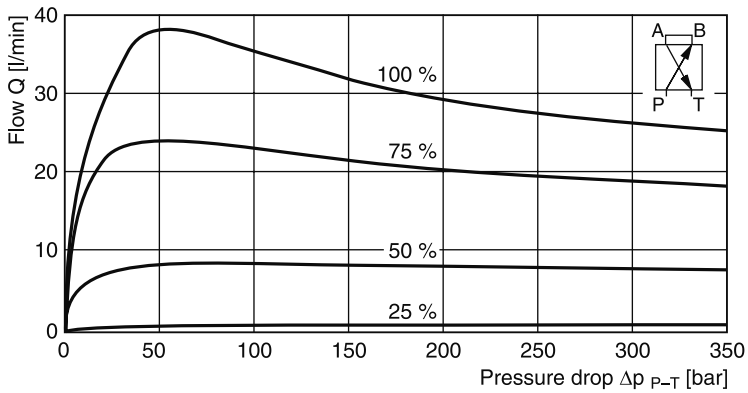

All characteristic curves measured with HLP46 at 50 °C.

Flow characteristics
D1FB*3 external electronics
at Δp = 5 bar per metering edge
Spool type E01/02/03, B31/32

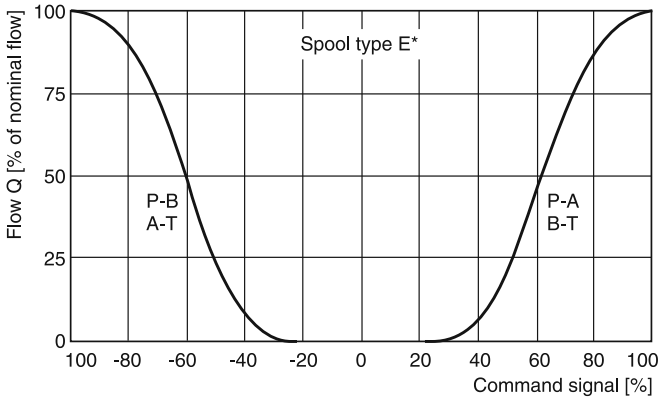

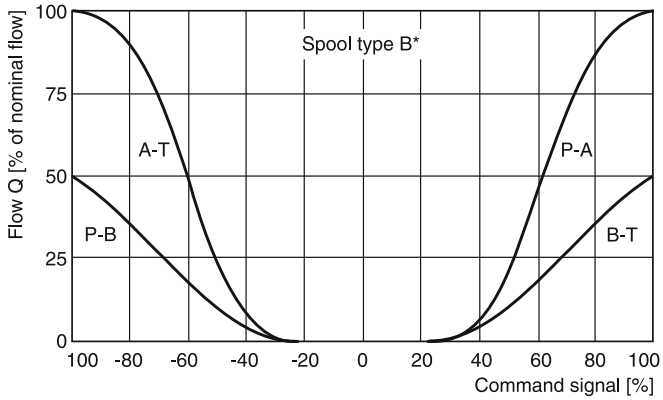

D1FB*3 OBE
(set to opening point 10 %)
at Δp = 5 bar per metering edge
Spool type E01/02

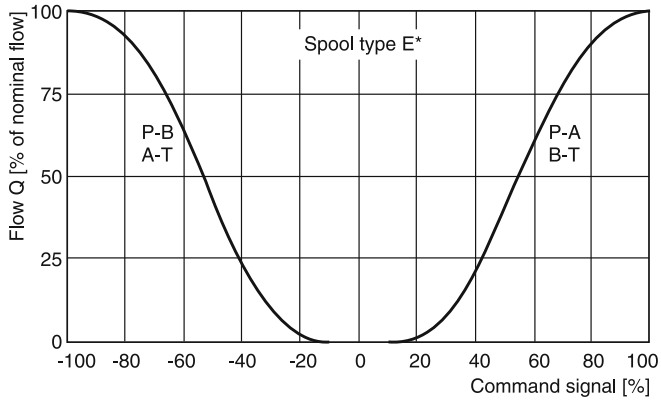

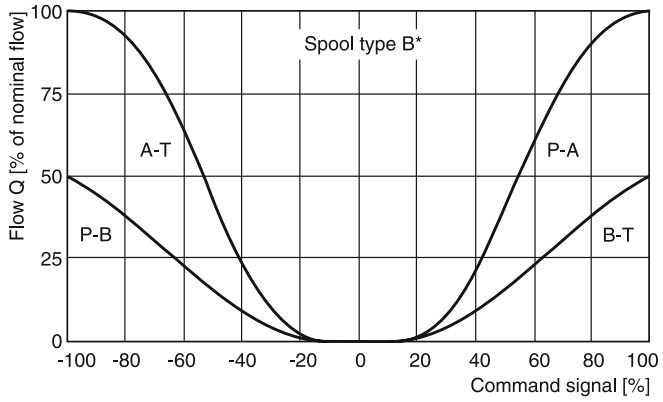

Functional limits
at 25 %, 50 %, 75 % and 100 % command signal (symmetric flow)

At asymmetric flow a reduced flow limit has to be considered.

Spool type E01K

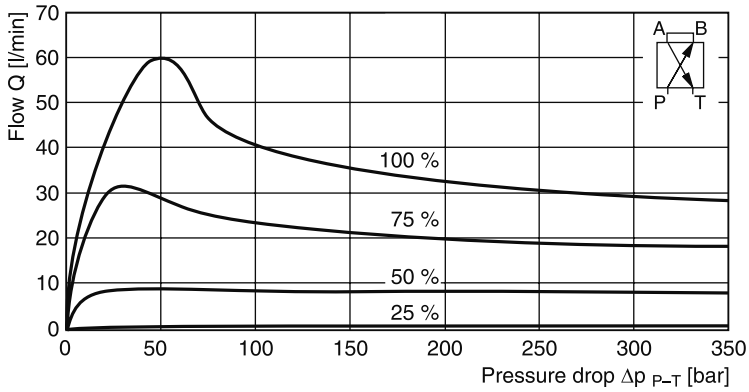

All characteristic curves measured with HLP46 at 50 °C.

D1FB UK.indd RH 17.04.2015

3

Code F0
6 + PE acc. to EN 175201-804

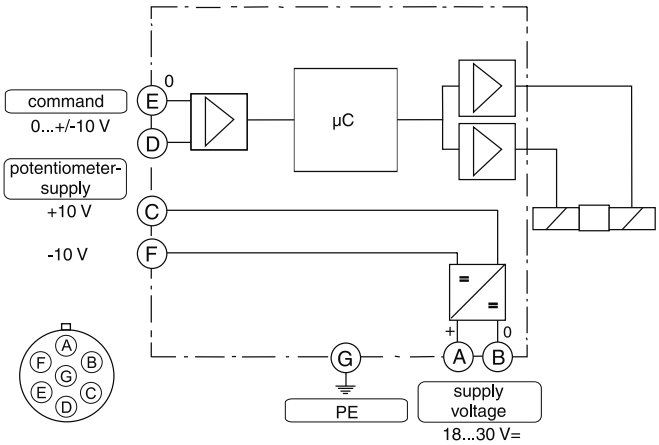

Code G0, S0
6 + PE acc. to EN 175201-804

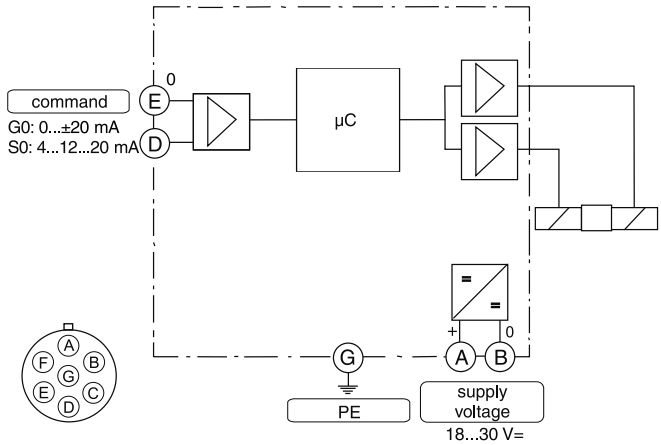

Code W5
11 + PE acc. to EN 175201-804

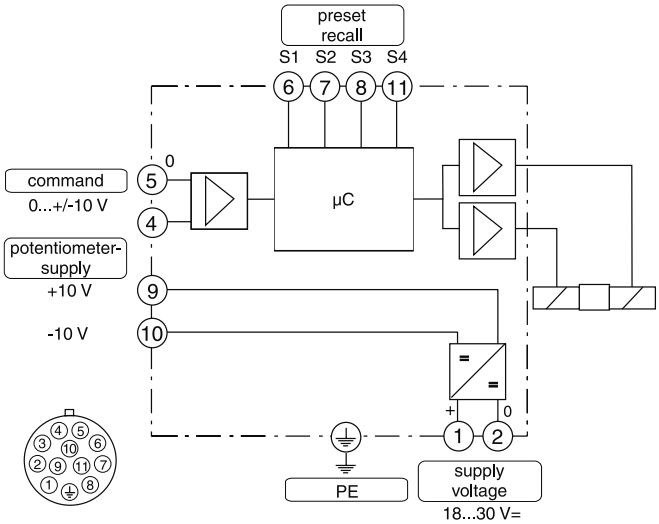

ProPxD interface program

The ProPxD software permits comfortable parameter setting for the module electronics. Via the clearly arranged entry mask the parameters can be noticed and modified. Storage of complete parameter sets is possible as well as printout or record as a text file for further documentation. Stored parameter sets may be loaded anytime and transmitted to other valves. Inside the electronics a non-volatile memory stores the data with the option for recalling or modification.

The PC software can be downloaded free of charge at www.parker.com/euro_hcd – see page “Support" or directly at www.parker.com/propxd.

Features

- Comfortable editing of all parameters
- Depiction and documentation of parameter sets
- Storage and loading of optimized parameter adjustments
- Executable with all actual Windows® operating systems from Windows® XP upwards
- Plain communication between PC and electronics via serial interface RS232C

The parametrizing cable may be ordered under item no. 40982923.

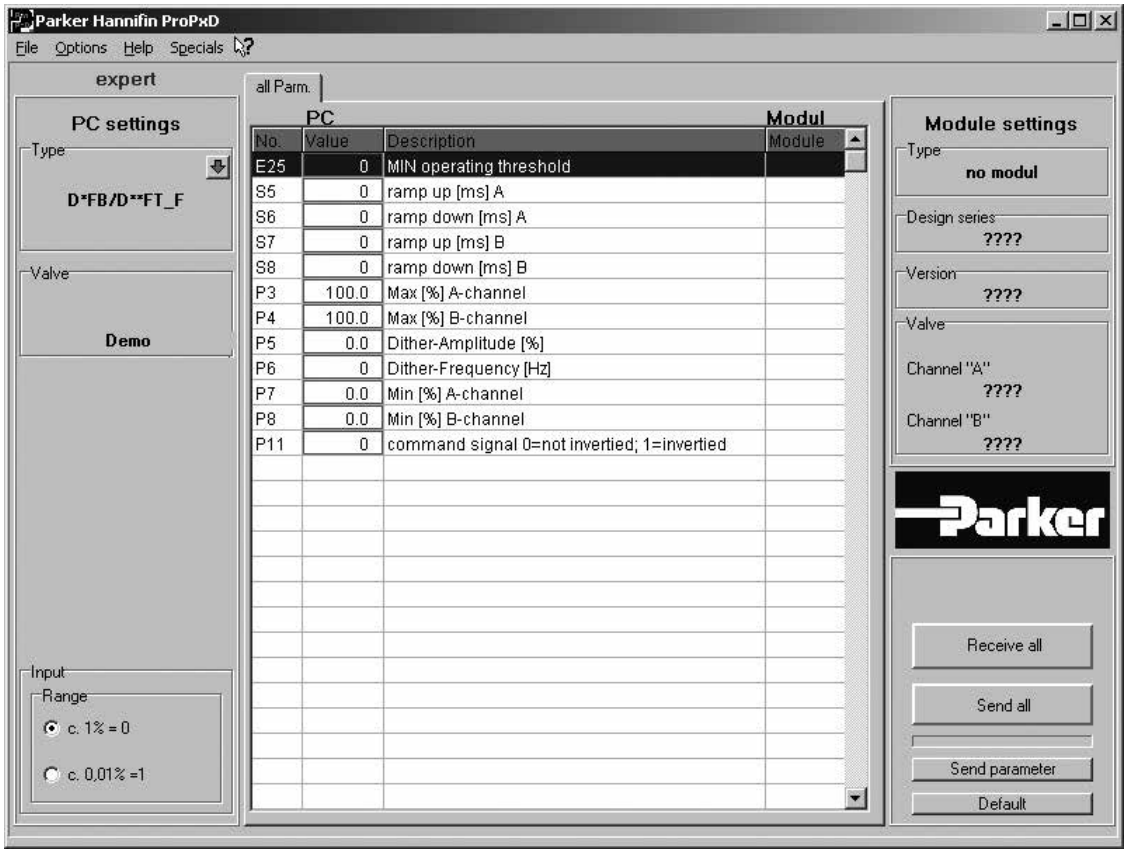

3

D1FB*C

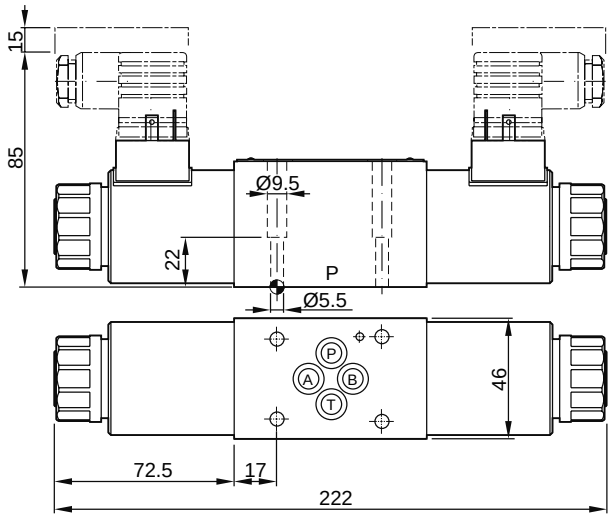

D1FB*E

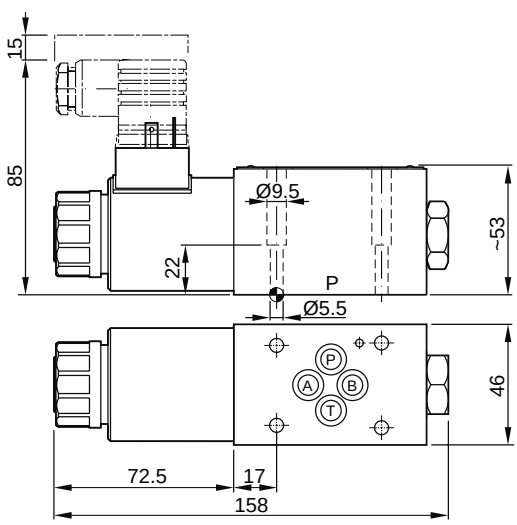

D1FB*K

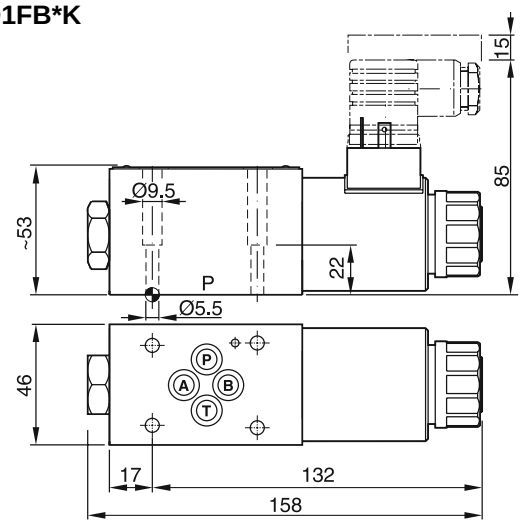

D1FB*C*0 with DT04-2P "Deutsch" connector
(only C style shown)

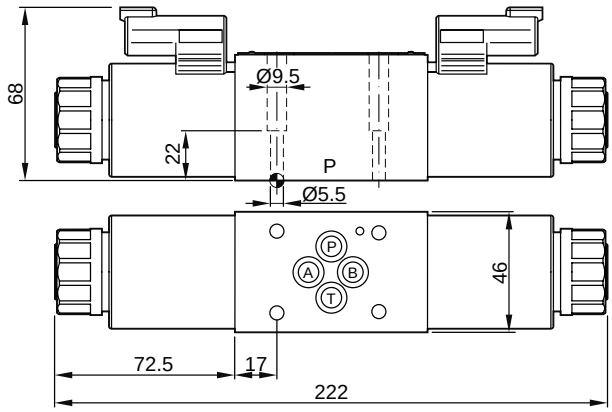

D1FB*C*3

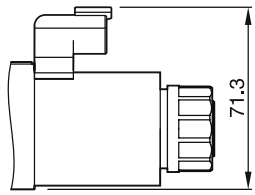

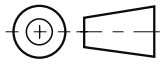

Surface finish	Kit			Kit NBR
R_{max}6.3 ▱ 0.01/100	BK375	4x M5x30 ISO 4762-12.9	7.6 Nm ±15 %	SK-D1FB

D1FB UK.indd RH 17.04.2015

D1FB*C OBE

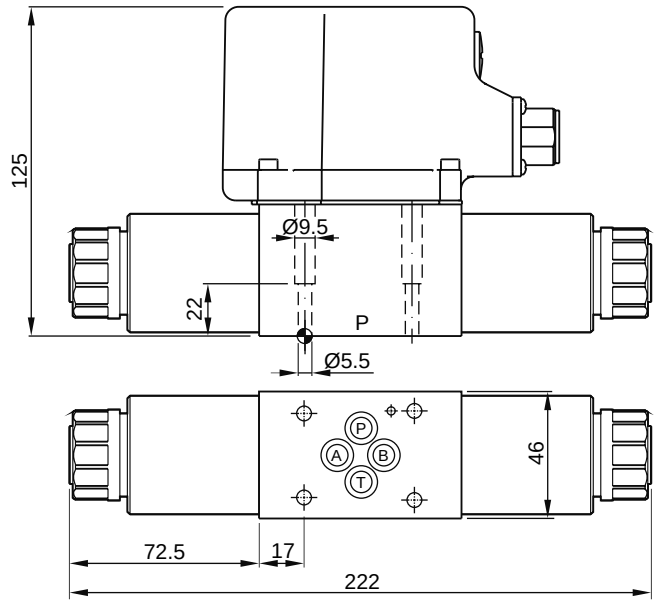

D1FB*E OBE

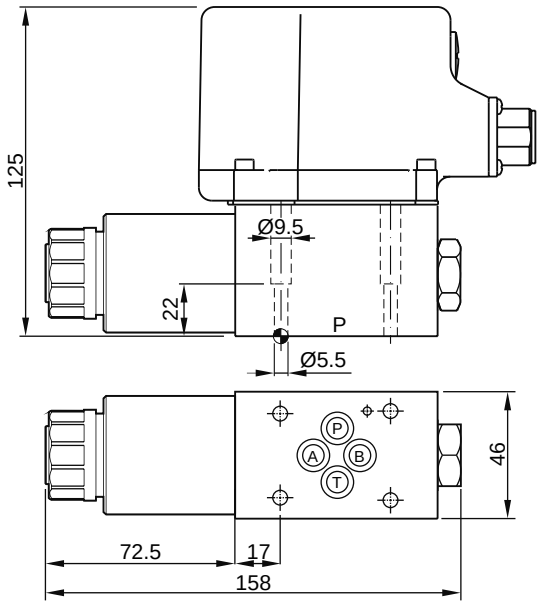

D1FB*K OBE

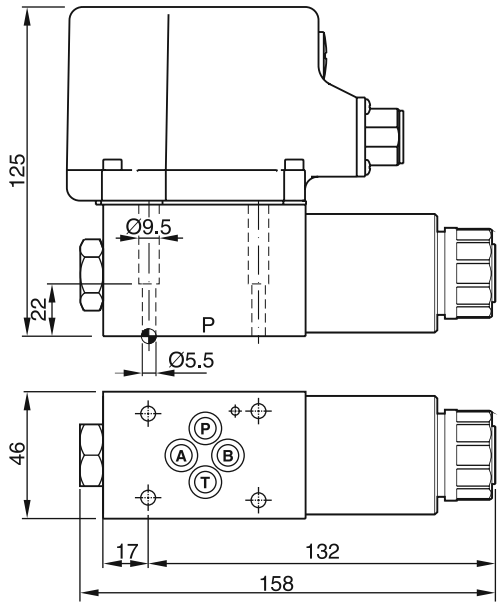

Surface finish	Kit			Kit NBR
R_{max}6.3 ▱ 0.01/100	BK375	4x M5x30 ISO 4762-12.9	7.6 Nm ±15 %	SK-D1FB

D1FB UK.indd RH 17.04.2015

3

The proportional directional valves D3FB (NG10) are available with and without onboard electronics (OBE).

D3FB OBE

The digital onboard electronics is situated in a robust metal housing, which allows the usage under rough environmental conditions.

The nominal values are factory set. The cable connection to a serial RS232 interface is available as accessory.

D3FB for external electronics

The parameters can be saved, changed and duplicated in combination with the digital power amplifier PWD00A-400.

The valve parameters can be edited with the common ProPxD software for both versions.

The D3FB valves can be ordered with spool/sleeve design (D3FB*0) for maximum precision as well as spool/body design (D3FB*3) for high nominal flow - see functional limit curves for maximum flow capability.

Features

- Spool/sleeve and spool/body
- 3 command options for D3FB OBE:
  +/- 10 V, 4…20 mA, +/- 20 mA
- High repeatability from valve to valve
- Low hysteresis
- Manual override
- Digital onboard electronics

D3FB

D3FB OBE

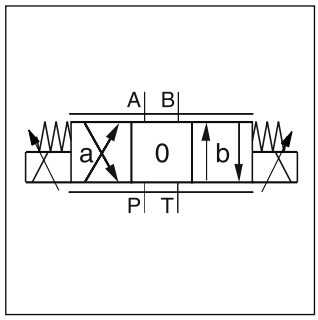

D3FB

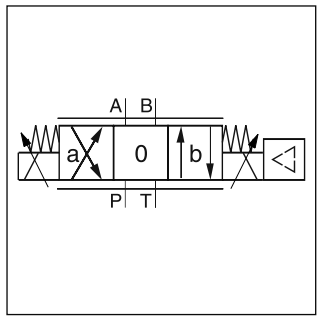

D3FB OBE

CE

D3FB*0 OBE
Spool/sleeve design

D3FB*3 OBE
Spool/body design

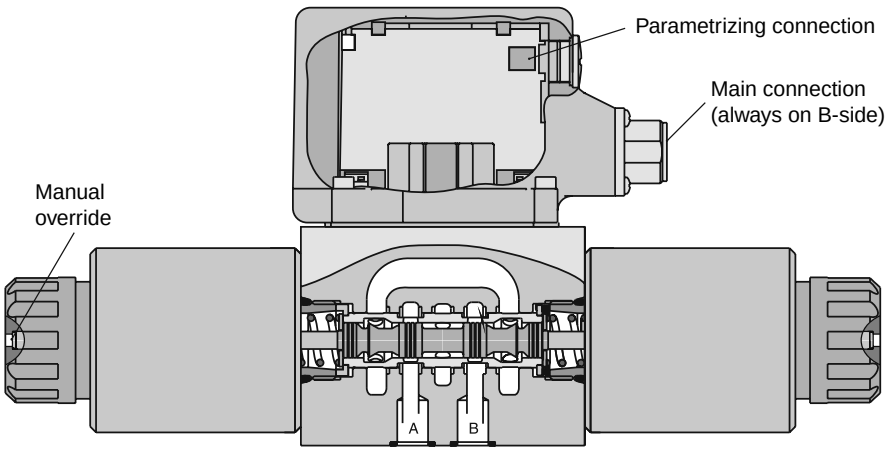

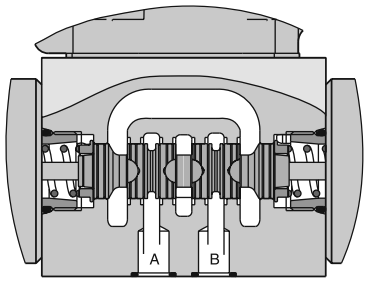

D3FB

D	3	F	B			0	N		W		
DC valve	**Size DIN NG10 CETOP 05 NFPA D05**	**Propor-tional control**	**Standard dynamics standard repeatability**	**Spool type**	**Spool position**		**Seal NBR** (other seal compounds on request)	**Solenoid**	**Connector as per EN 175301-803 without plug** [1]	**Design**	**Design series** (not required for ordering)

D3FB*0: Spool/sleeve design		
Code	Spool type	Flow [l/min] at Δp 5 bar per metering edge
Overlap		
E01M **E01S**	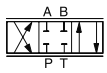	**40** **60**
E02M **E02S**		**40** **60**
B31M **B31S**	$Q_B = Q_A/2$ 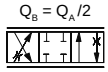	**40 / 20** **60 / 30**
B32M **B32S**	$Q_B = Q_A/2$ 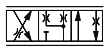	**40 / 20** **60 / 30**

D3FB*3: Spool/body design		
Code	Spool type	Flow [l/min] at Δp 5 bar per metering edge
Overlap		
E01M **E01S** **E01U**	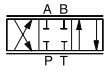	**40** **60** **80**
E02M **E02S** **E02U**		**40** **60** **80**
B31M **B31S** **B31U**	$Q_B = Q_A/2$	**40 / 20** **60 / 30** **80 / 40**
B32M **B32S** **B32U**	$Q_B = Q_A/2$	**40 / 20** **60 / 30** **80 / 40**

Code	Design
0	**Spool/sleeve design**
3	**Spool/body design**

D3FB*0: Spool/sleeve design	
Code	Solenoid
K	**12 V / 2.95 A**

D3FB*3: Spool/body design	
Code	Solenoid
K	**12 V / 2.95 A**
J	**24 V / 1.5 A**

Code	Design
C	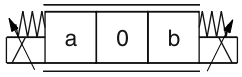
E	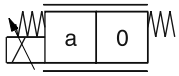
K	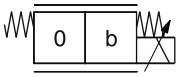

Short delivery time for all variations

For regenerative and hybrid function refer solution with sandwich and adaptor plates "A10-1664 / A10-1665L / H10-1662 / H10-1666L" in chapter 12.

[1] Please order connector separately, see chapter 3 accessories.

3

D3FB OBE (with onboard electronics)

D	3	F	B			0	N				
Directional control valve	**Size DIN NG10 CETOP 05 NFPA D05**	**Proportional control**	**Standard dynamics standard repeatability**	**Spool type**	**Spool position**		**Seals NBR** (other seal compounds on request)	**Input signal**	**Options**	**Design**	**Design series** (not required for ordering)

D3FB*0: Spool/sleeve design		
Code	Spool type	Flow [l/min] at Δp 5 bar per metering edge
Overlap		
E01M **E01S**	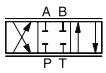	**40** **60**
E02M **E02S**	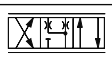	**40** **60**
B31M **B31S**	$Q_B = Q_A/2$ 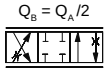	**40 / 20** **60 / 30**
B32M **B32S**	$Q_B = Q_A/2$ 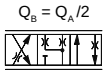	**40 / 20** **60 / 30**

D3FB*3: Spool/body design		
Code	Spool type	Flow [l/min] at Δp 5 bar per metering edge
Overlap		
E01M **E01S** **E01U**	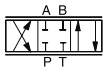	**40** **60** **80**
E02M **E02S** **E02U**		**40** **60** **80**
B31M **B31S** **B31U**	$Q_B = Q_A/2$	**40 / 20** **60 / 30** **80 / 40**
B32M **B32S** **B32U**	$Q_B = Q_A/2$	**40 / 20** **60 / 30** **80 / 40**

Code	Design
0	**Spool/sleeve design**
3	**Spool/body design**

Code	Input signal [1]	Function	Port	Options
F0	**0...+/-10 V**	**0...+10 V > P-A**	**6 + PE**	**Potentiometer supply**
G0	**0...+/-20 mA**	**0...+20 mA > P-A**	**6 + PE**	**—**
S0	**4...20 mA**	**12...20 mA > P-A**	**6 + PE**	**—**
W5 [2]	**0...+/-10 V** **4...20 mA**	**0...+10 V > P-A** **12...20 mA > P-A**	**11 + PE**	**Command channel & potentiometer supply**

Code	Design
C	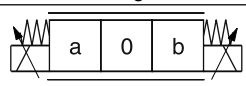
E	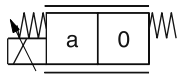
K	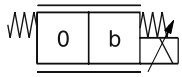

Short delivery time for all variations

For regenerative and hybrid function refer solution with sandwich and adaptor plates "A10-1664 / A10-1665L / H10-1662 / H10-1666L" in chapter 12.
Please order connector separately, see chapter 3 accessories.
Parametrizing cable OBE → RS232: Item no. 40982923

[1] Single solenoid always 0...+10 V respectively 4...20 mA.

[2] Factory set ±10 V on delivery.

D3FB UK.indd RH 17.04.2015

General			
Design		Direct operated proportional DC valve	
Actuation		Proportional solenoid	
Size		NG10 / CETOP 05 / NFPA D05	
Mounting interface		DIN 24340 / ISO 4401 / CETOP RP121 / NFPA	
Mounting position		unrestricted	
Ambient temperature	[°C]	-20...+60	
$MTTF_D$ value [1]	[years]	150	
Weight (OBE)	[kg]	6.5 (7.2)	
Vibration resistance	[g]	10 Sinus 5...2000 Hz acc. IEC 68-2-6 30 Random noise 20...2000 Hz acc. IEC 68-2-36 15 Shock acc. IEC 68-2-27	
Hydraulic			
Max. operating pressure	[bar]	Ports P, A, B 350, T 210	
Max. pressure drop PABT / PBAT	[bar]	350	
Fluid		Hydraulic oil according to DIN 51524 ... 535, other on request	
Fluid temperature	[°C]	-25...+60	
Viscosity permitted recommended	[cSt] / [mm^2/s] [cSt] / [mm^2/s]	20...400 30...80	
Filtration		ISO 4406 (1999); 18/16/13	
		D3FB*0 (Spool/sleeve)	**D3FB*3 (Spool/body)**
Nominal flow at Δp=5 bar per control edge [2]	[l/min]	40 / 60	40 / 60 / 80
Leakage at 100 bar	[ml/min]	<100	<100
Opening point (OBE)	[%]	see flow characteristics (set to 10 command signal)	
Static / Dynamic			
Step response at 100 % step	[ms]	40	
Hysteresis	[%]	<4	<5
Temperature drift solenoid current	[%/K]	<0.02	
Electrical characteristics			
Duty ratio	[%]	100 ED; CAUTION: Coil temperature up to 150 °C possible	
Protection class		IP65 in accordance with EN 60529 (with correctly mounted plug-in connector)	
Solenoid		**Code "K"**	**Code "J"**
Supply voltage	[V]	12	24
Current consumption	[A]	2.95	1.5
Resistance	[Ohm]	3.84	16.25
Solenoid connection		Connector as per EN 175301-803	
Wiring min.	[mm^2]	3 x 1.5 recommended	
Wiring lenght max.	[m]	50 recommended	

[1] If valves with onboard electronics are used in safety-related parts of control systems, in case the safety function is requested, the valve electronics voltage supply is to be switched off by a suitable switching element with sufficient reliability.

[2] Flow rate for different Δp per control edge: $Q_x = Q_{Nom.} \cdot \sqrt{\frac{\Delta p_x}{\Delta p_{Nom.}}}$

3

3

Electrical characteristics OBE		
Duty ratio	[%]	100 ED; CAUTION: coil temperatures up to 150 °C possible
Protection class		IP65 in accordance with EN 60529 (with correctly mounted plug-in connector)
Supply voltage/ripple DC	[V]	18...30, ripple < 5 % eff., surge free
Current consumption max.	[A]	3.5
Pre fusing medium lag	[A]	4.0
Input signal		
Codes F0 & W5 voltage	[V]	+10...0...-10, ripple < 0.01 % eff., surge free, Ri = 100 kOhm, 0...+10 V ⇒ P -> A
Codes S0 & W5 current	[mA]	4...12...20, ripple < 0.01 % eff., surge free, Ri = 200 Ohm, 12...20 mA ⇒ P -> A < 3.6 mA = enable off, > 3.8 mA = enable on (acc. to NAMUR NE43)
Code G0	[mA]	+20...0...-20, ripple < 0.01 % eff., surge free, Ri = 200 Ohm, 0...+20 mA ⇒ P -> A
Differential input max.		
Codes F0, G0 & S0	[V]	30 for terminal D and E against PE (terminal G) 11 for terminal D and E against 0V (terminal B)
Code W5	[V]	30 for terminal 4 and 5 against PE (terminal PE) 11 for terminal 4 and 5 against 0V (terminal 2)
Channel recall signal	[V]	0...2.5: off / 5...30: on / Ri = 100 kOhm
Adjustment ranges Min	[%]	0...50
Adjustment ranges Max	[%]	50...100
Adjustment ranges Ramp	[s]	0...32.5
Interface		RS 232, parametrizing connection 5pole
EMC		EN 61000-6-2, EN 61000-6-4
Central connection		
Codes F0, G0 & S0		6 + PE acc. to EN 175201-804
Code W5		11 + PE acc. to EN 175201-804
Wiring min.		
Codes F0, G0 & S0	[mm²]	7 x 1.0 (AWG16) overall braid shield
Code W5	[mm²]	11 x 1.0 (AWG16) overall braid shield
Wiring length max.		50

Flow characteristics

D3FB external electronics
at Δp = 5 bar per metering edge
Spool type E01/02, B31/32

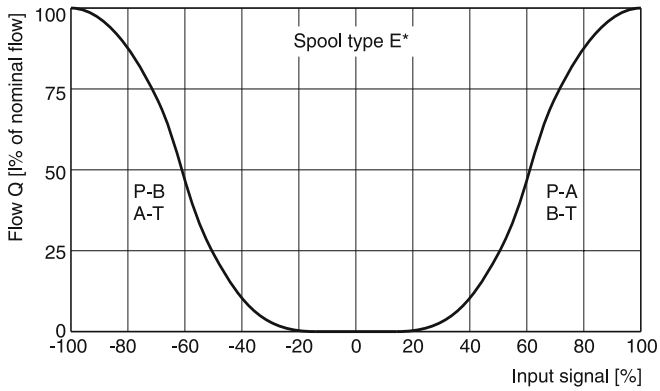

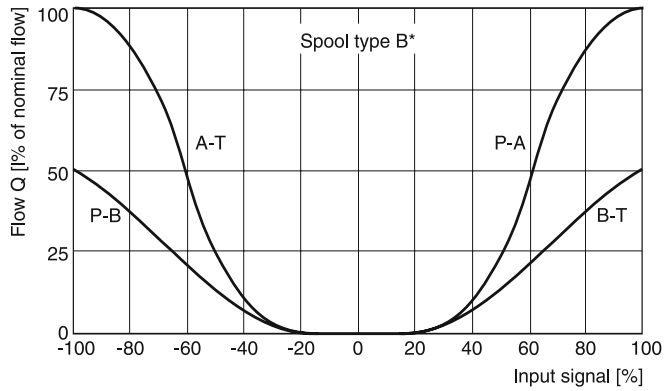

D3FB OBE
(set to opening point 10 %)
at Δp = 5 bar per metering edge
Spool type E01/02, B31/32

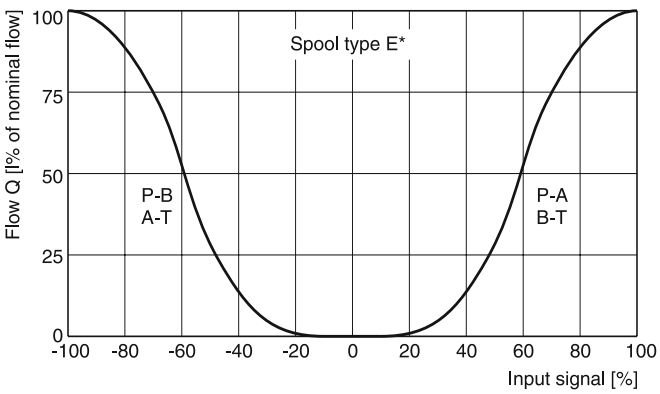

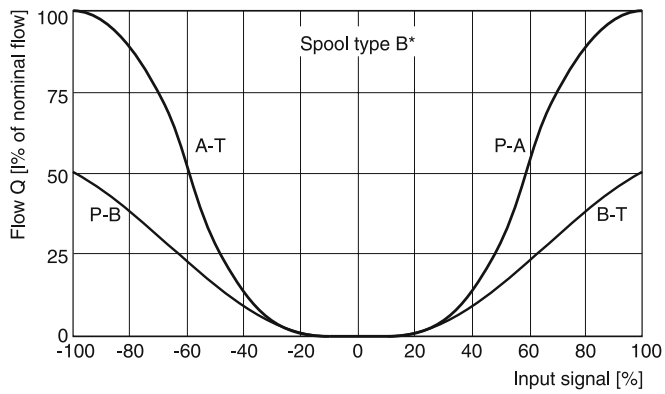

Functional limits

100 % command signal (symmetric flow). At asymmetric flow a reduced flow limit has to be considered.

D3FB*0

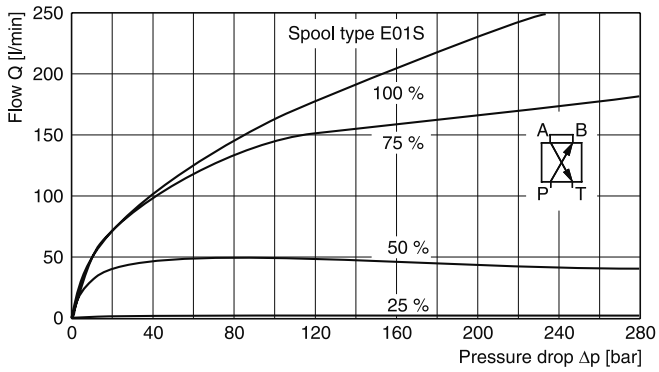

D3FB*3

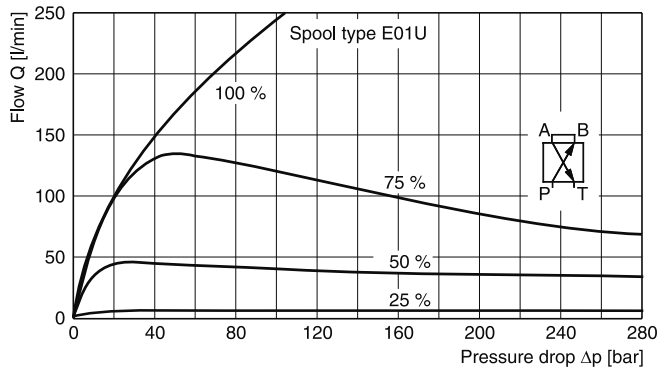

All characteristic curves measured with HLP46 at 50 °C.

3

Code F0
6 + PE acc. to EN 175201-804

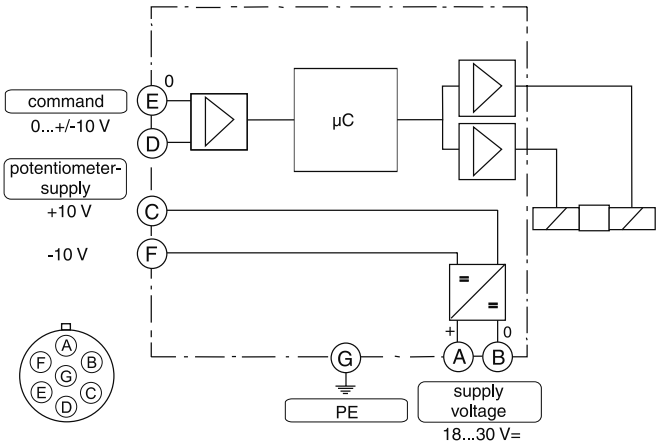

Code G0, S0
6 + PE acc. to EN 175201-804

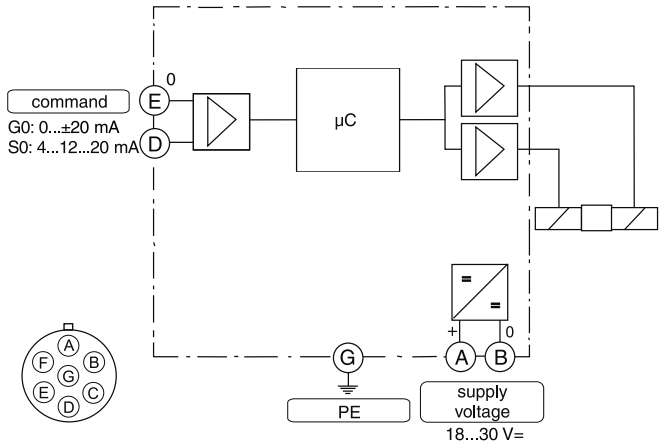

Code W5
11 + PE acc. to EN 175201-804

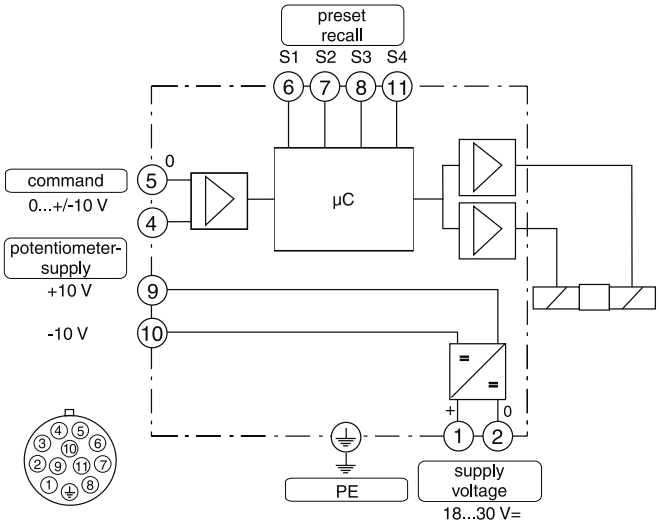

ProPxD interface program

The ProPxD software permits comfortable parameter setting for the module electronics. Via the clearly arranged entry mask the parameters can be noticed and modified. Storage of complete parameter sets is possible as well as printout or record as a text file for further documentation. Stored parameter sets may be loaded anytime and transmitted to other valves. Inside the electronics a non-volatile memory stores the data with the option for recalling or modification.

The PC software can be downloaded free of charge at www.parker.com/euro_hcd – see page “Support" or directly at www.parker.com/propxd.

Features

- Comfortable editing of all parameters
- Depiction and documentation of parameter sets
- Storage and loading of optimized parameter adjustments
- Executable with all actual Windows® operating systems from Windows® XP upwards
- Plain communication between PC and electronics via serial interface RS232C

The parametrizing cable may be ordered under item no. 40982923.

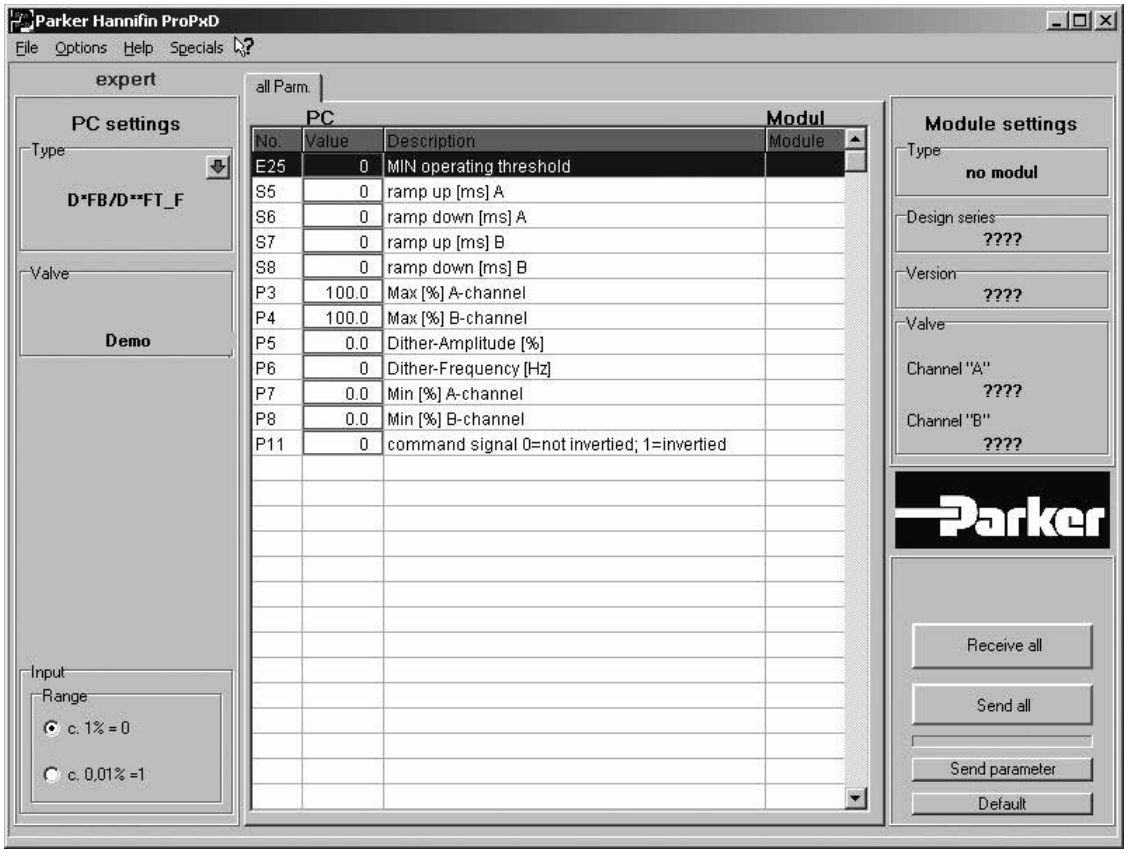

3

D3FB*C

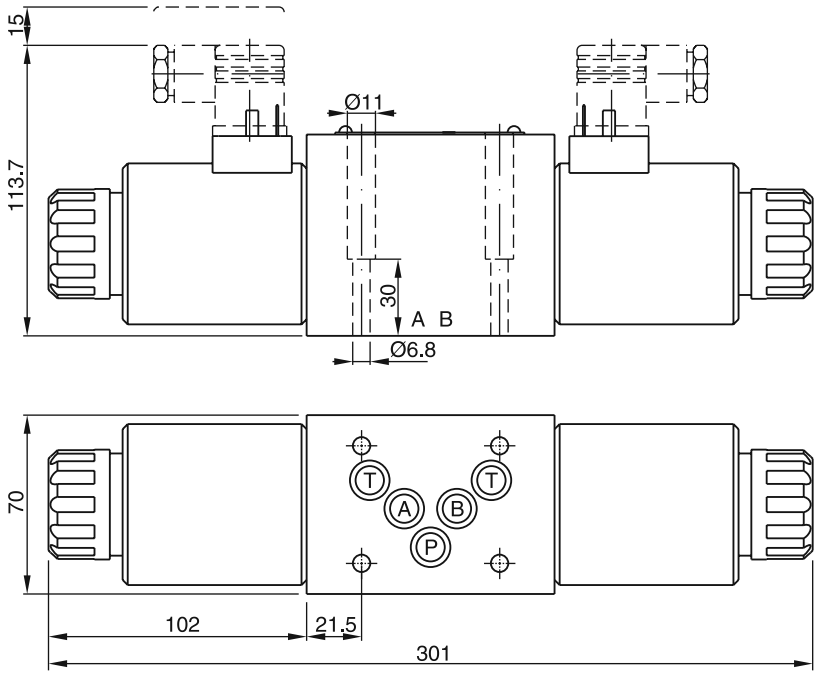

D3FB*E

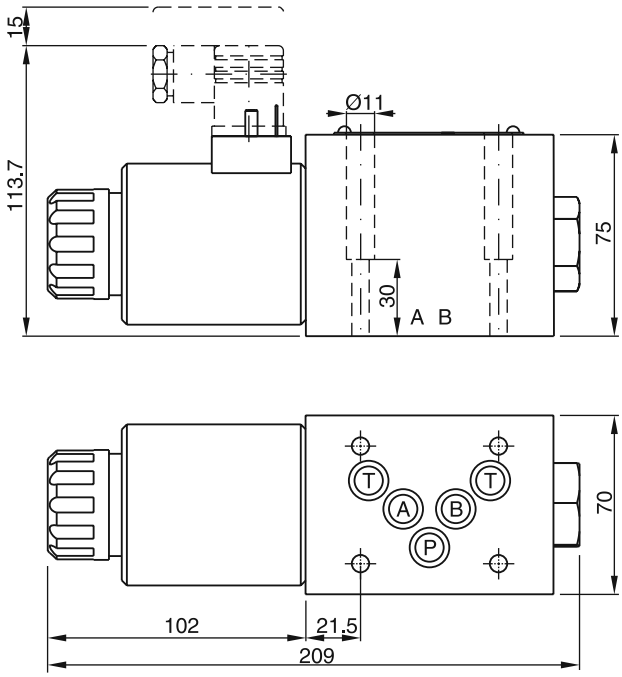

D3FB*K

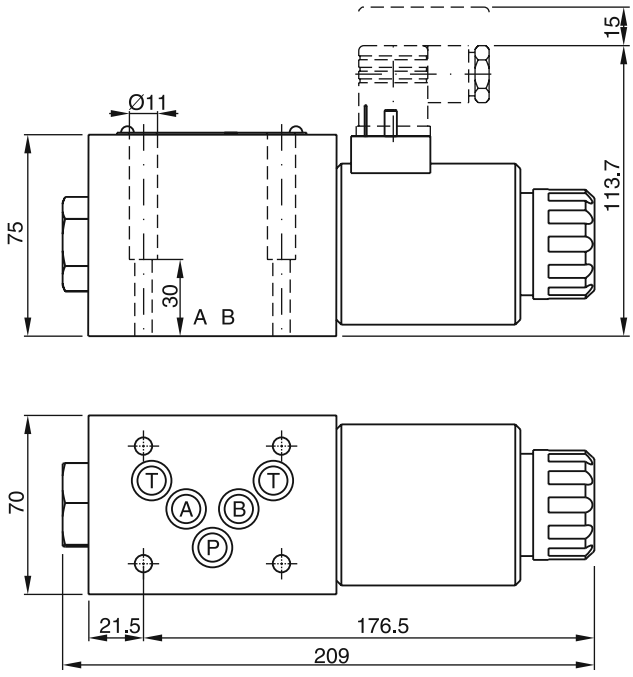

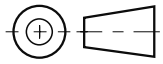

Surface finish	Kit			Kit NBR
R_{max}6.3 ▱ 0.01/100	BK385	4x M6x40 ISO 4762-12.9	13.2 Nm ±15 %	SK-D3FB

D3FB UK.indd RH 17.04.2015

D3FB*C OBE

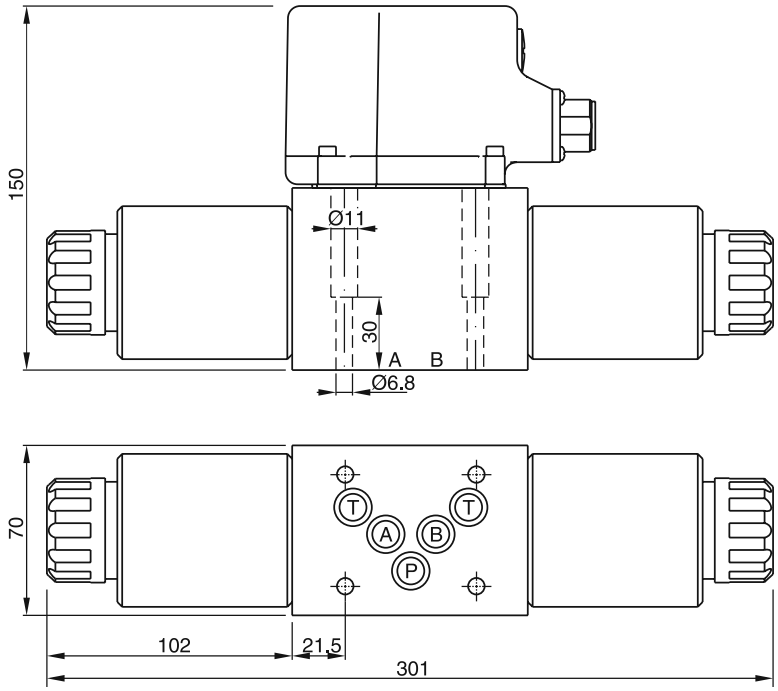

D3FB*E OBE

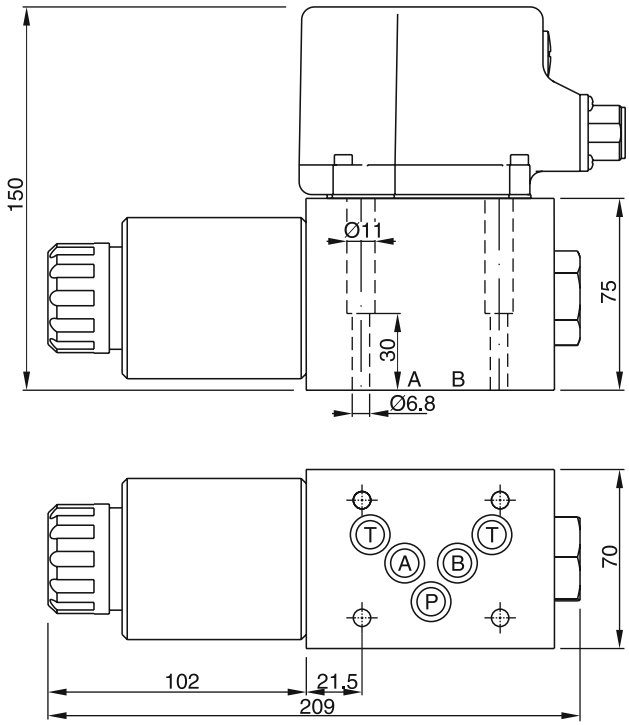

D3FB*K OBE

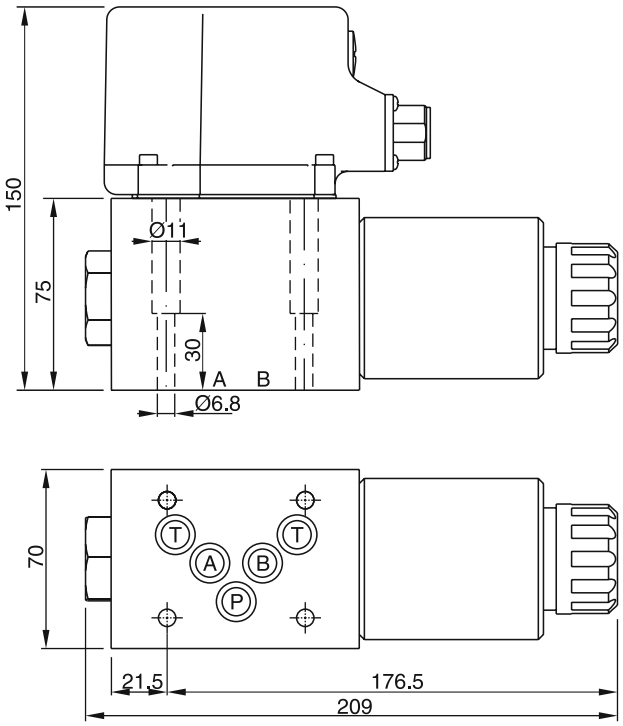

Surface finish	Kit			Kit NBR
R_{max}6.3 ▱ 0.01/100	BK385	4x M6x40 ISO 4762-12.9	13.2 Nm ±15 %	SK-D3FB

D3FB UK.indd RH 17.04.2015

3

The proportional directional valves D1FB (NG06) and D3FB (NG10) with CANopen interface are based on the series for standard digital electronics of the same name.

CANopen-Profile

CANopen Application Layer and Communication Layer
CiA DS - 301 Version 4.01

CANopen Layer Setting Services (LSS) and Protocols
CiA DS – 305 Version 2.0

Device Profile in accordance with
CiA DSP – 408 Version 1.5.2

The baud rate and node ID can be set by dip switches or Layer Setting Service (LSS).

The valve parameters are factory set. Additionally the ProPxD software permits the editing of all parameters via the separate communication port. The software is also used for the valves with digital onboard electronics and the electronics modules. The cable for connection to a serial RS232 interface is available as accessory.

The digital onboard electronics is situated in a robust metal housing and can be used in rough environments.

The series D1FB and D3FB are available with spool/ sleeve design as well as with spool/body design.

D3FB*C

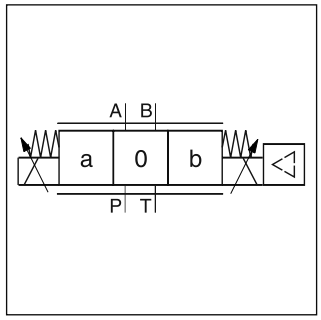

D*FB*C

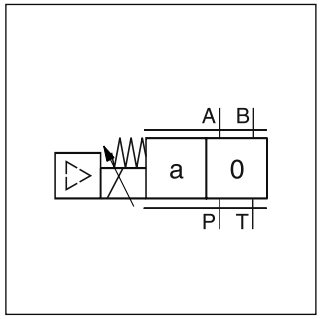

D*FB*E

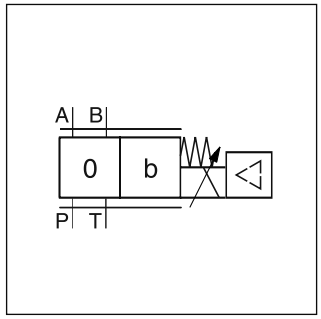

D*FB*K

Features

- CANopen interface
- Spool/sleeve design and spool/body design
- High repeatability from valve to valve
- Low hysteresis
- Manual override
- Failsafe center position

D3FB*C*0
Spool/sleeve design

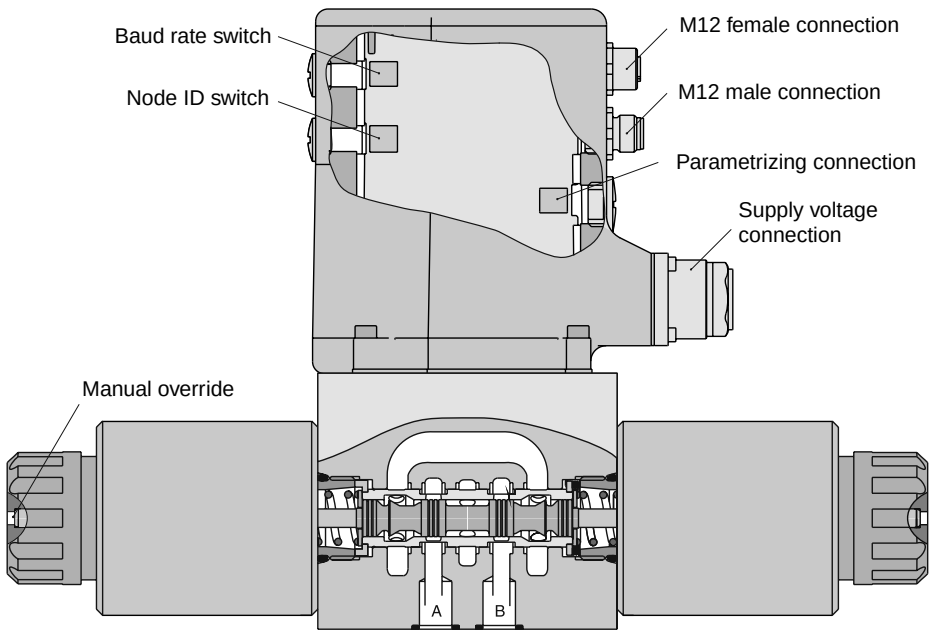

D1FB*C*0
Spool/sleeve design

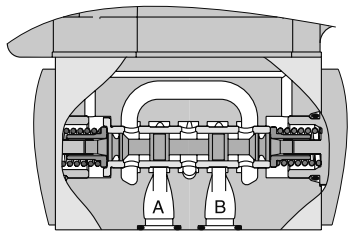

D3FB*C*3
Spool/body design

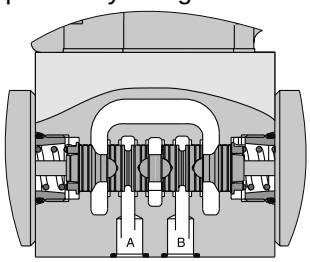

D1FB

D	1	F	B			0	N	U	0		
Directional control valve	**Size DIN NG06 CETOP 03 NFPA D03**	**Proportional control**	**Standard dynamics standard repeatability**	**Spool type**	**Spool position**		**Seals NBR** (other seal compounds on request)	**Communication interface CANopen DSP 408, 6+PE, 1xM12 male 1xM12 female**	**Options**	**Design**	**Design series** (not required for ordering)

D1FB*0: Spool/sleeve design		
Code	Spool type	Flow [l/min] at Δp 5 bar per metering edge
Overlap		
E01C **E01F** **E01H**	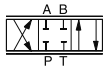	**6** **12** **20**
E02C **E02F** **E02H**		**6** **12** **20**
E03C **E03F** **E03H**		**6** **12** **20**
B31F **B31H**	$Q_B = Q_A/2$	**12 / 6** **20 / 10**
B32F **B32H**	$Q_B = Q_A/2$ 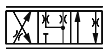	**12 / 6** **20 / 10**

D1FB*3: Spool/body design		
Code	Spool type	Flow [l/min] at Δp 5 bar per metering edge
Overlap		
E01F **E01H** **E01K**	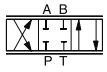	**10** **20** **30**
E02F **E02H** **E02K**		**10** **20** **30**
B31F **B31H** **B31K**	$Q_B = Q_A/2$	**10 / 5** **20 / 10** **30 / 15**
B32F **B32H** **B32K**	$Q_B = Q_A/2$	**10 / 5** **20 / 10** **30 / 15**

Code	Design
0	**Spool/sleeve design**
3	**Spool/body design**

Code	Spool position
C	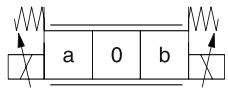
E	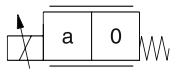
K	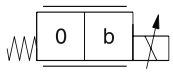

Short delivery time for all variations

Please order connector separately, see chapter 3 accessories.
Parametrizing cable OBE → RS232, Item no. 40982923

D3FB

D	3	F	B			0	N	U	0		
Directional control valve	**Size DIN NG10 CETOP 05 NFPA D05**	**Proportional control**	**Standard dynamics standard repeatability**	**Spool type**	**Spool position**		**Seals NBR** (other seal compounds on request)	**Communication interface CANopen DSP 408, 6+PE, 1xM12 male 1xM12 female**	**Options**	**Design**	**Design series** (not required for ordering)

3

Code	Spool type	Flow [l/min] at Δp 5 bar per metering edge
Overlap		
E01M E01S E01U[1)]	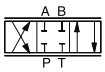	**40 60 80**
E02M E02S E02U[1)]		**40 60 80**
B31M B31S B31U[1)]	$Q_B = Q_A/2$	**40 / 20 60 / 30 80 / 40**
B32M B32S B32U[1)]	$Q_B = Q_A/2$	**40 / 20 60 / 30 80 / 40**

Code	Design
0	**Spool/sleeve design**
3	**Spool/body design**

Code	Spool position
C	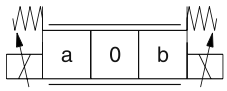
E	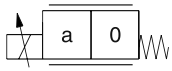
K	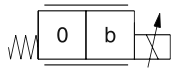

Short delivery time for all variations

Please order connector separately, see chapter 3 accessories.
Parametrizing cable OBE → RS232, Item no. 40982923

[1)] Only for Code 3 Spool/body design.

D_FB CANopen UK.indd RH 17.04.2015

General				
Design		Direct operated proportional DC valve		
Actuation		Proportional solenoid		
Size		NG06/CETOP 03/NFPA D03		NG10/CETOP 05/NFPA D05
Mounting interface		DIN 24340 / ISO 4401 / CETOP RP121 / NFPA		
Mounting position		unrestricted		
Ambient temperature	[°C]	-20...+60		
$MTTF_D$ value [1]	[years]	150		
Weight	[kg]	2.5		7
Vibration resistance	[g]	10 Sinus 5...2000 Hz acc. IEC 68-2-6 30 Random noise 20...2000Hz acc. IEC 68-2-36 15 Shock acc. IEC 68-2-27		
Hydraulic				
Max. operating pressure	[bar]	Ports P, A, B 350; Port T 210		
Max. pressure drop PABT / PBAT	[bar]	350		
Fluid		Hydraulic oil according to DIN 51524 ... 535, other on request		
Fluid temperature	[°C]	-25...+60		
Viscosity permitted	[cSt]/[mm^2/s]	20...400		
recommended	[cSt]/[mm^2/s]	30...80		
Filtration		ISO 4406 (1999); 18/16/13		
		D1FB*0	**D1FB*3**	**D3FB*0/3**
Nominal flow at Δp=5 bar per control edge [2]	[l/min]	6 / 12 / 20	10 / 20 / 30	40 / 60 / 80
Leakage at 100 bar	[ml/min]	<50	<60	<100
Opening point	[%]	set to 10 commande signal (see flow characteristics)		
Static / Dynamic				
Step response at 100 % step	[ms]	30	30	40
Hysteresis	[%]	<4	<6	<5
Temperature drift solenoid current	[%/K]	<0.02		
Electrical characteristics				
Duty ratio	[%]	100; CAUTION: coil temperature up to 150 °C possible		
Protection class		IP65 in accordance with EN 60529 (with correctly mounted plug-in connector)		
Supply voltage/ripple DC	[V]	18...30, ripple < 5 % eff., surge free		
Current consumption max.	[A]	2.0		3.0
Pre fusing medium lag	[A]	2.5		4.0
EMC		EN 61000-6-2, EN 61000-6-4		
Connection supply voltage		6 + PE acc. to EN 175201-804		
Connection CANopen		1 x Male M12x1: 5p 1 x Female M12x1: 5p acc. to IEC61076-2-101		
Wiring supply voltage min.	[mm^2]	3 x 1.0 (AWG16) overall braid shield		
Wiring length supply voltage max.	[m]	50		
Wiring CANopen		acc. to CiA DS-301 Version 4 / Twisted pair cable acc. to ISO11898		
CANopen				
Profiles		Communication Layer CIA DS - 301 version 2 Device Profile in accordance with CIA DS - 408 Version 1.5.2 Layer Setting Service (LSS) CIA DS - 305 Version 2		
Functionality		CANopen slave One PDO (Receive) One PDO (Transmit) One SDO (not useable for valve parameterizing) Emergency object Sync object Node guarding Life guarding Heartbeat time (producer/consumer) Minimum boot - up Node - ID - adjustment by DIP switch and LSS Baud Rate - adjustment by DIP switch and LSS		
Parameterization				
Interface		RS 232, parametrizing cable order code 40982923		
Interface program		ProPxD (see www.parker.com/propxd)		
Adjustment ranges Min	[%]	0...50		
Adjustment ranges Max	[%]	50...100		
Adjustment ranges Ramp	[s]	0...32.5		

[1] If valves with onboard electronics are used in safety-related parts of control systems, in case the safety function is requested, the valve electronics voltage supply is to be switched off by a suitable switching element with sufficient reliability.

[2] Flow rate for different Δp per control edge: $Q_x = Q_{Nom.} \cdot \sqrt{\frac{\Delta p_x}{\Delta p_{Nom.}}}$

D_FB CANopen UK.indd RH 17.04.2015

3

Flow characteristics D1FB*0
(set to opening point 10 %)
at Δp = 5 bar per metering edge
Spool type E01/02/03, B31/32

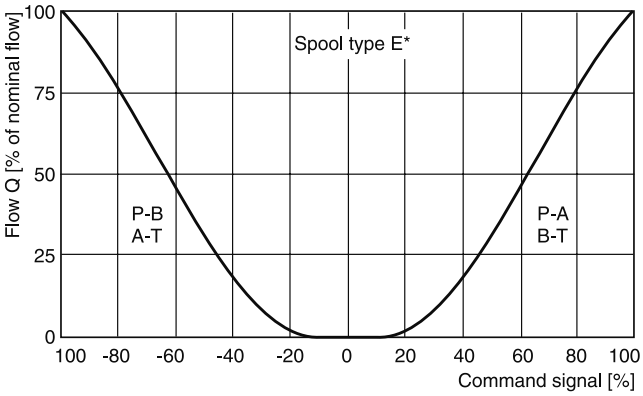

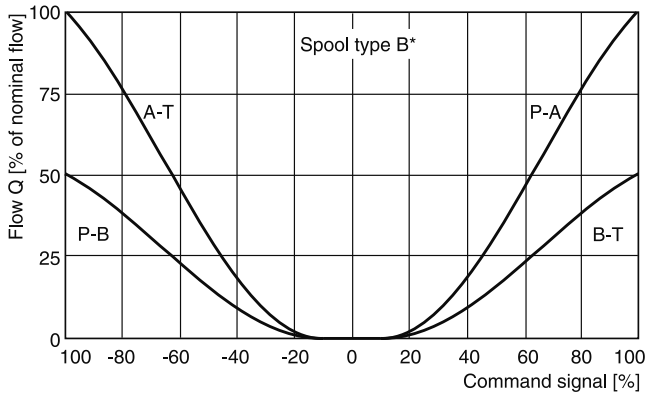

Flow characteristics D1FB*3
(set to opening point 10 %)
at Δp = 5 bar per metering edge
Spool type E01/02/03, B31/32

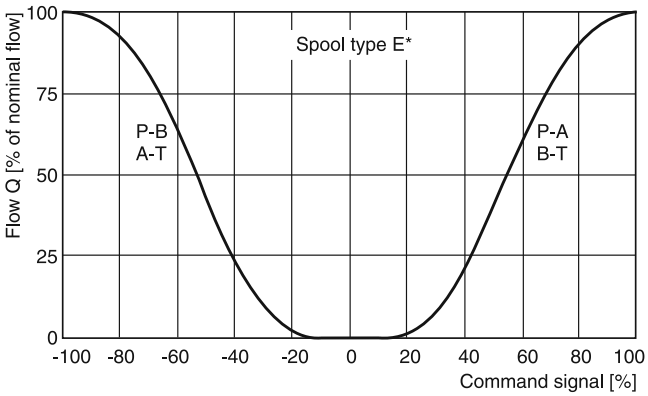

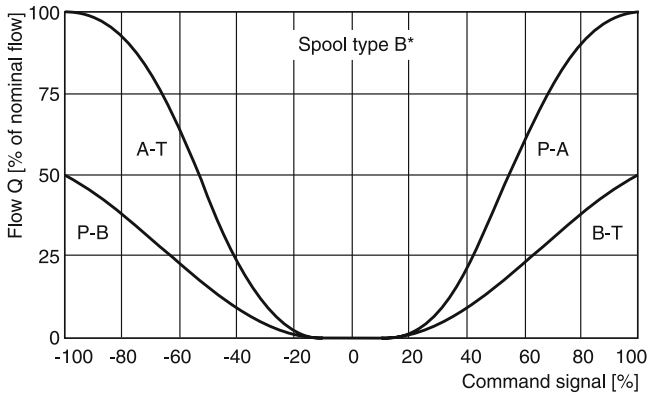

Flow limit
at 25 %, 50 %, 75 % and 100 % command signal (symmetric flow). At asymmetric flow a lower flow limit has to be considered.

D1FB*0
Spool type E01H

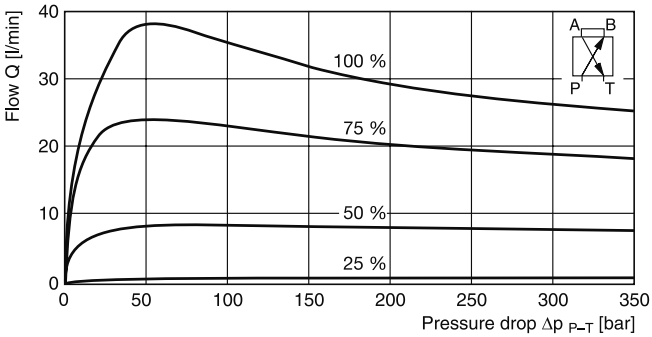

D1FB*3
Spool type E01K

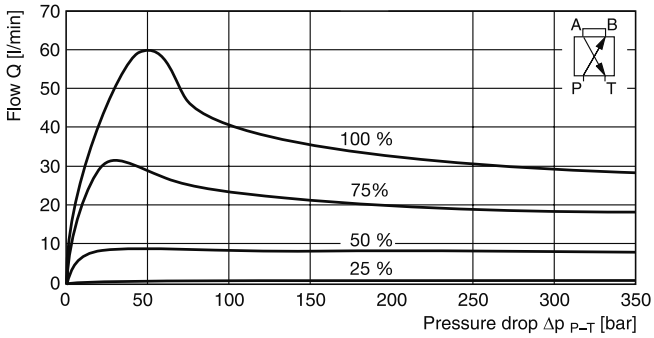

All characteristic curves measured with HLP46 at 50 °C.

Flow characteristics D3FB

(set to opening point 10 %)
at Δp = 5 bar per metering edge
Spool type E01/02, B31/32

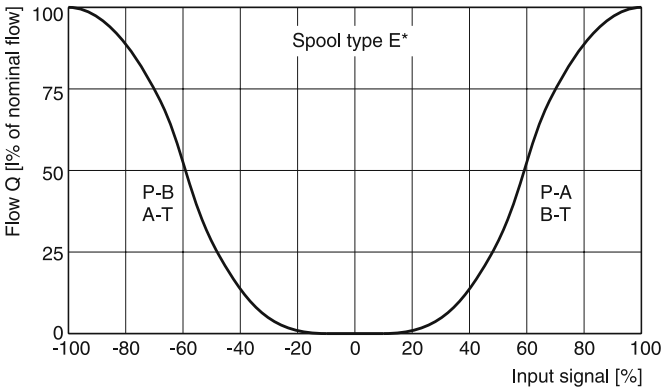

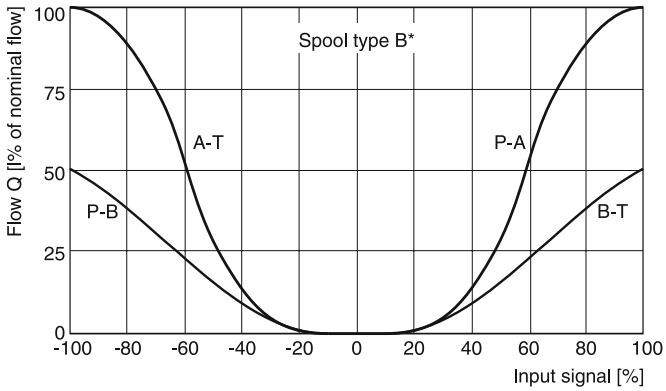

Flow limit

at 25 %, 50 %, 75 % and 100 % command signal (symmetric flow).
At asymmetric flow a lower flow limit has to be considered.

D3FB*0

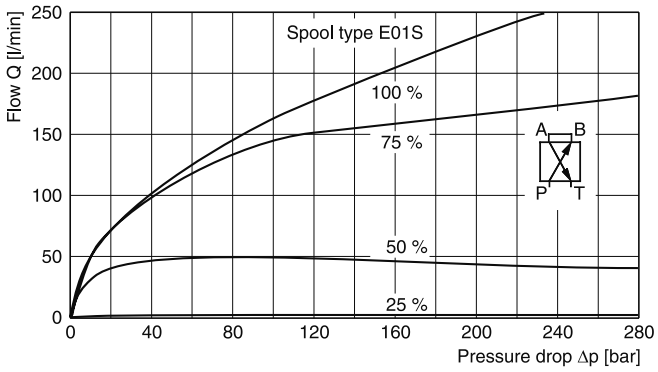

D3FB*3

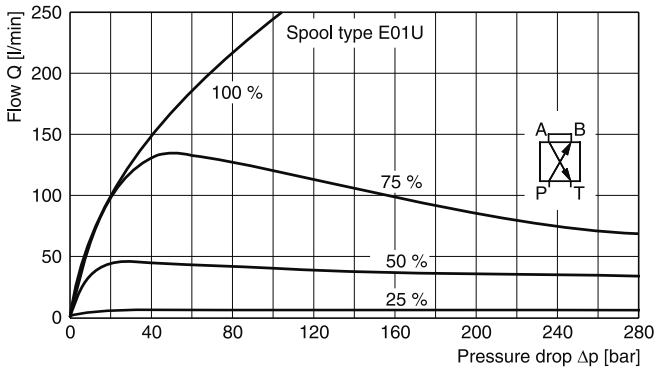

All characteristic curves measured with HLP46 at 50 °C.

Supply voltage connection

6 + PE

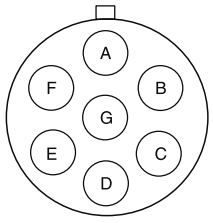

A Supply voltage 18...30 V
B Supply voltage 0 V
C nc
D nc
E nc
F nc
G PE

CANopen connection

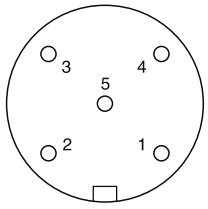

CAN in: M12, 5 pole male terminals.
Pin 1: CAN_SHLD
Pin 2: nc
Pin 3: CAN_GND
Pin 4: CAN_H
Pin 5: CAN_L

Shield is CAN_GND.

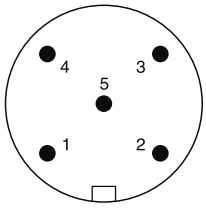

CAN out: M12, 5 pole female terminals.
Pin 1: CAN_SHLD
Pin 2: nc
Pin 3: CAN_GND
Pin 4: CAN_H
Pin 5: CAN_L

Shield is CAN_GND.

3

Node–ID adjustment with DIP switches

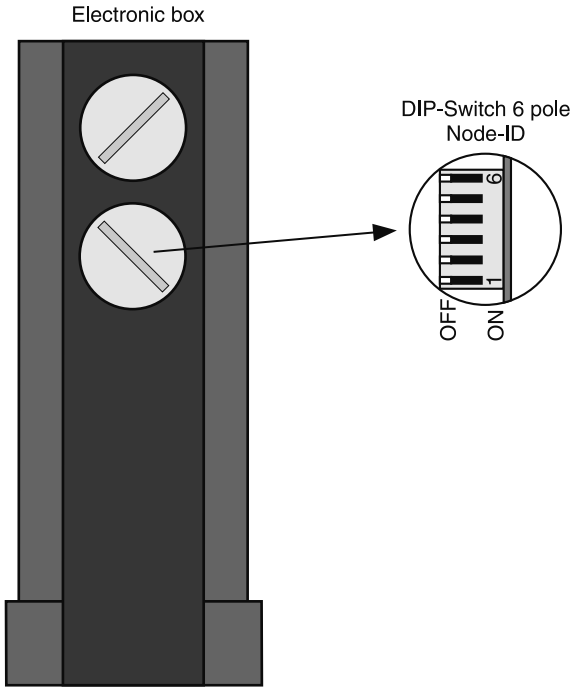

Node-ID	DIP switch setting					
	1	2	3	4	5	6
0 LSS -priority	**OFF**	**OFF**	**OFF**	**OFF**	**OFF**	**OFF**
1	**ON**	OFF	OFF	OFF	OFF	OFF
2	OFF	**ON**	OFF	OFF	OFF	OFF
3	**ON**	**ON**	OFF	OFF	OFF	OFF
…						
61	**ON**	OFF	**ON**	**ON**	**ON**	**ON**
62	OFF	**ON**	**ON**	**ON**	**ON**	**ON**
63	**ON**	**ON**	**ON**	**ON**	**ON**	**ON**
	1	2	3	4	5	6
	value					

Baud Rate adjustment with DIP switches

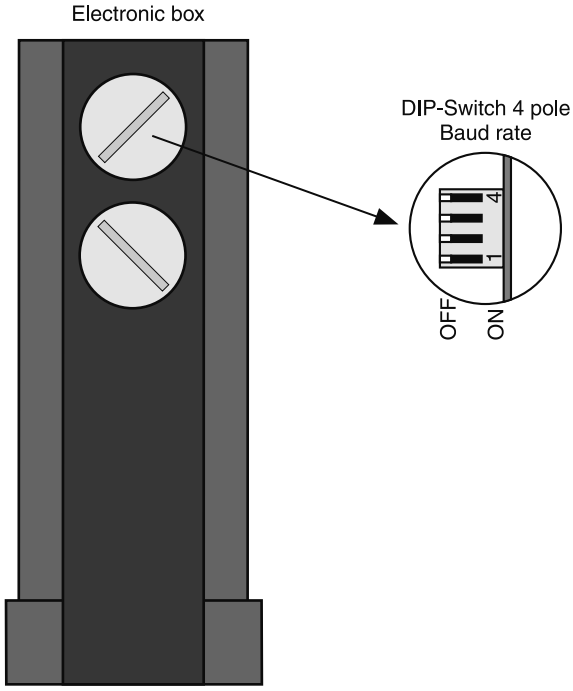

Baud Rate	DIP switch setting			
	1	2	3	4
0 LSS -priority	**OFF**	**OFF**	**OFF**	valve parameterization and diagnostics ON/OFF
10 kBit/s	**ON**	OFF	OFF	
20 kBit/s	OFF	**ON**	OFF	
50 kBit/s	**ON**	**ON**	OFF	
125 kBit/s	OFF	OFF	**ON**	
250 kBit/s	**ON**	OFF	**ON**	
500 kBit/s	OFF	**ON**	**ON**	
1 MBit/s	**ON**	**ON**	**ON**	

ProPxD interface program

The ProPxD software permits comfortable parameter setting for the module electronics. Via the clearly arranged entry mask the parameters can be noticed and modified. Storage of complete parameter sets is possible as well as printout or record as a text file for further documentation. Stored parameter sets may be loaded anytime and transmitted to other valves. Inside the electronics a non-volatile memory stores the data with the option for recalling or modification.

The PC software can be downloaded free of charge at www.parker.com/euro_hcd – see page “Support" or directly at www.parker.com/propxd.

Features

- Comfortable editing of all parameters
- Depiction and documentation of parameter sets
- Storage and loading of optimized parameter adjustments
- Executable with all actual Windows® operating systems from Windows® XP upwards
- Plain communication between PC and electronics via serial interface RS232C

The parametrizing cable may be ordered under item no. 40982923.

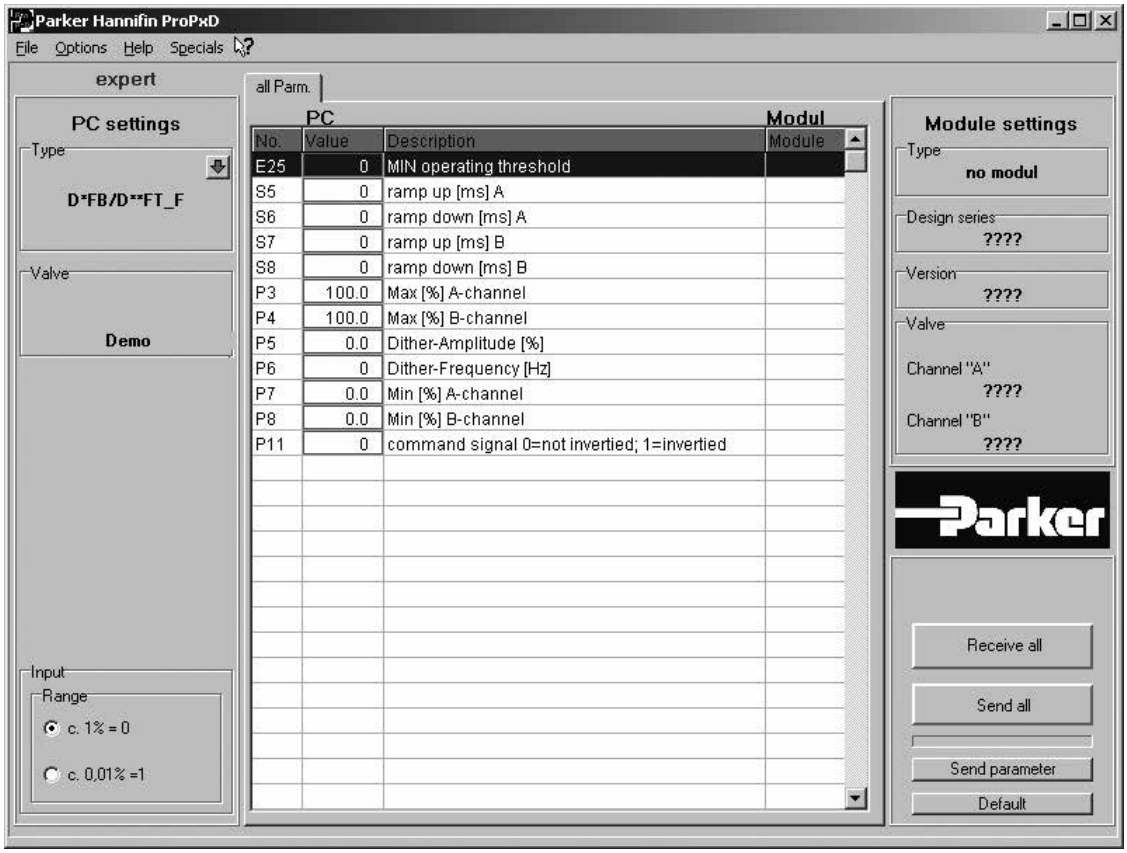

3

D1FB*C

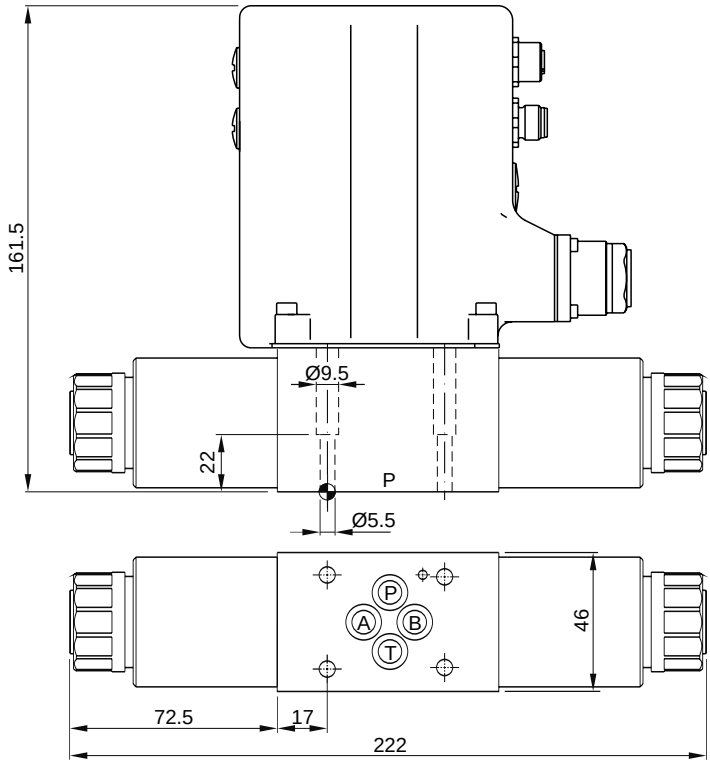

D1FB*E

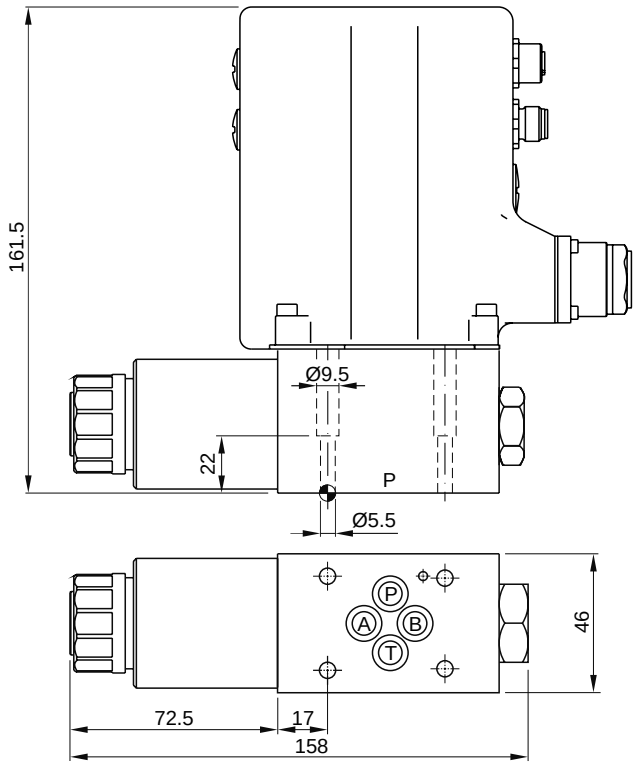

Surface finish	Kit			Kit NBR
R_{max}6.3 / 0.01/100	BK375	4x M5x30 ISO 4762-12.9	7.6 Nm ±15%	SK-D1FB

D_FB CANopen UK.indd RH 17.04.2015

D3FB*C

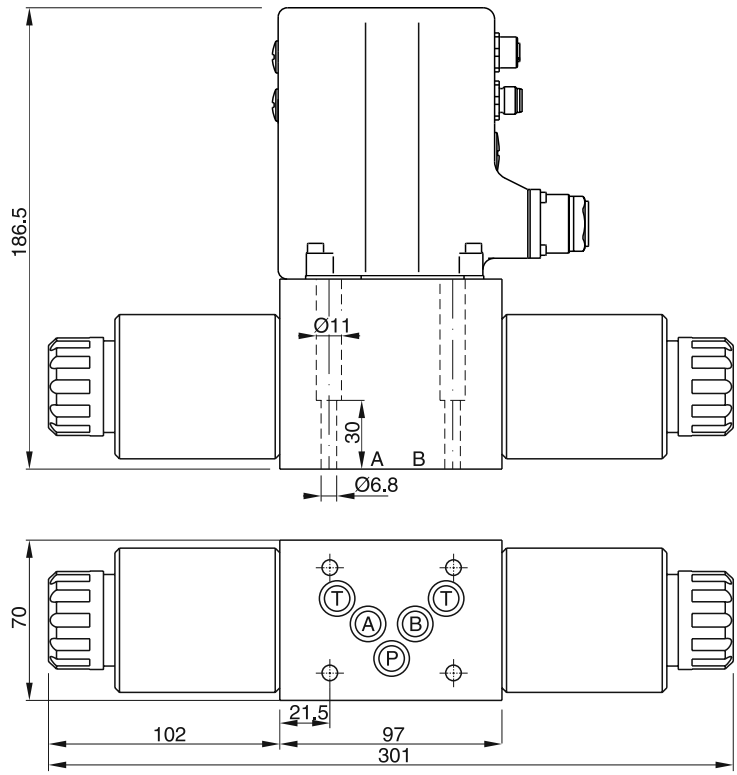

D3FB*E

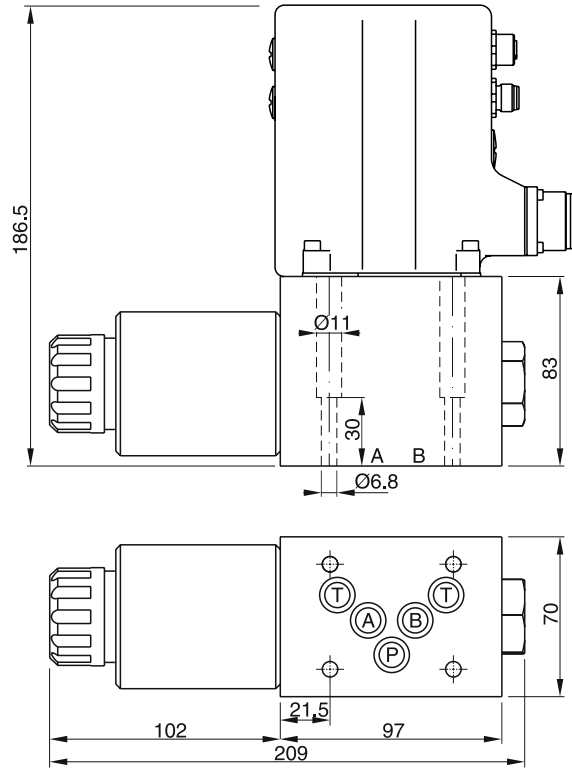

Surface finish	Kit			Kit NBR
R_{max}6.3 ▱ 0.01/100	BK385	4x M6x40 ISO 4762-12.9	13.2 Nm ±15%	SK-D3FB

D_FB CANopen UK.indd RH 17.04.2015

The pilot operated proportional directional valves D*1FB are available in 4 sizes:

D31FB - NG10 (CETOP 05)
D41FB - NG16 (CETOP 07)
D91FB - NG25 (CETOP 08)
D111FB - NG32 (CETOP 10)

The valves are available with and without onboard electronics (OBE).

3

D*1FB OBE

The digital onboard electronics is situated in a robust metal housing, which allows the usage under rough environmental conditions.

The nominal values are factory set. The cable connection to a serial RS232 interface is available as accessory.

D*1FB for external electronics

The parameters can be saved, changed and duplicated in combination with the digital power amplifier PWD00A-400.

The valve parameters can be edited with the common ProPxD software for both versions.

The D*1FB valves work with barometric feedback of the main stage to the pressure reducing pilot valve. The pilot control pressure of 25 bar allows high flow rates at maximum stability.

The innovative integrated regenerative function into the A-line (optional) allows energy saving circuits for differential cylinders. The hybrid version can be switched between regenerative mode and standard mode at any time.

Valves with explosion proof solenoids Ex e mb II see catalogue HY11-3343.

Download: www.parker.com/euro_hcd - see “Literature”

D91FB OBE

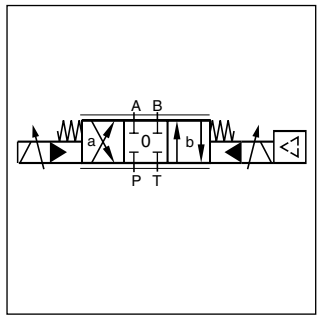

Standard D*1FB OBE

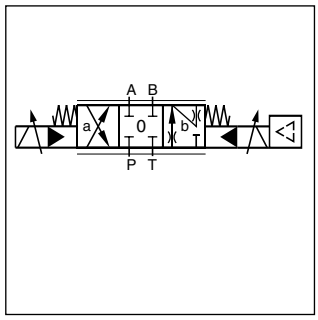

A-regeneration D*1FBR OBE

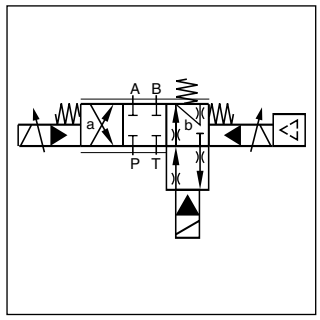

Hybrid D*1FBZ OBE

Technical Features

- Progressive flow characteristics for sensitive adjustment of flow rate
- High flow capacity
- Digital onboard electronics optional
- Centre position monitoring optional
- Energy saving A-regeneration optional
- Switchable hybrid version optional

Further literature about the opportunities of energy savings and more functional details of the integrated regeneration is available on request.

D91FB OBE

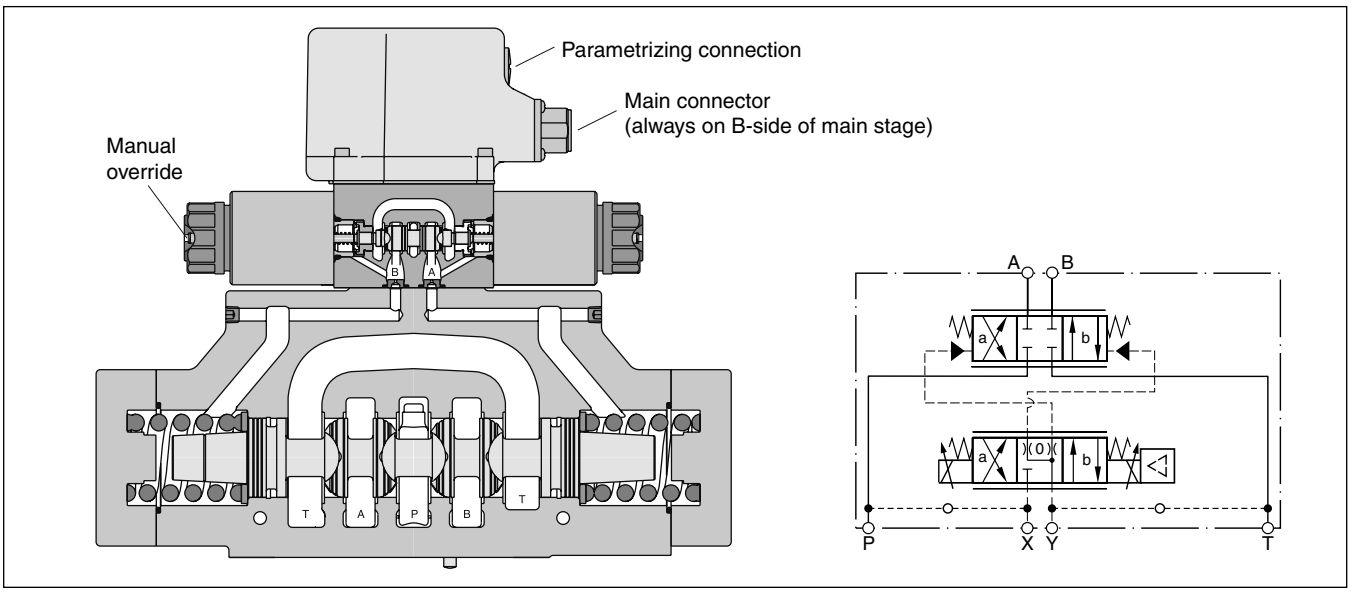

D*1FBR and D*1FBZ

Regenerative valve D*1FBR

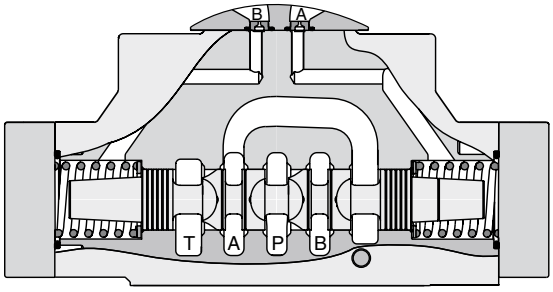

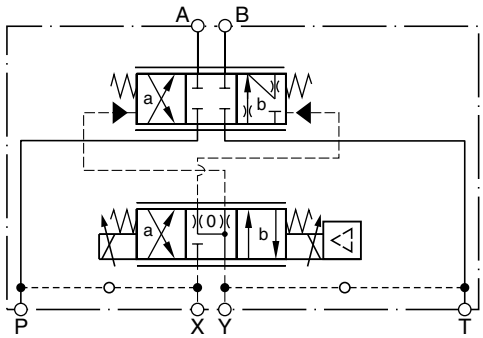

Hybrid valve D*1FBZ

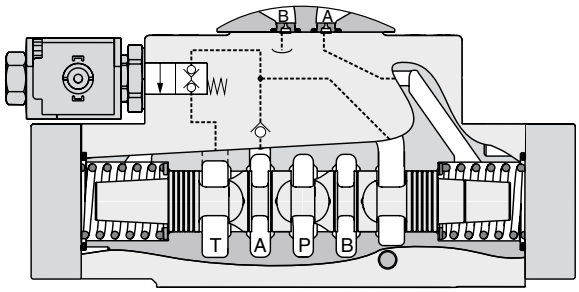

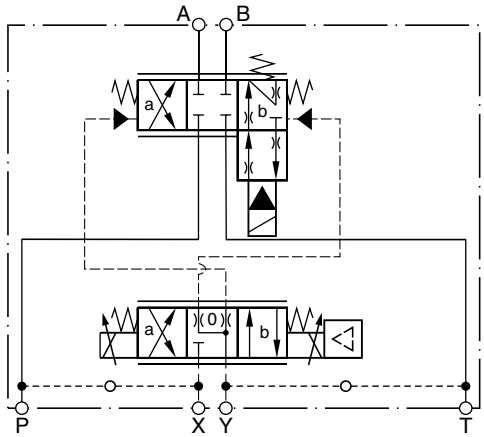

D*1FBR (regenerative valve)
Cylinder extending

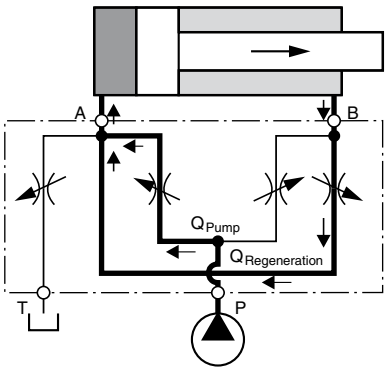

D*1FBZ (hybrid valve)
Cylinder extending
regenerative mode
(high speed)

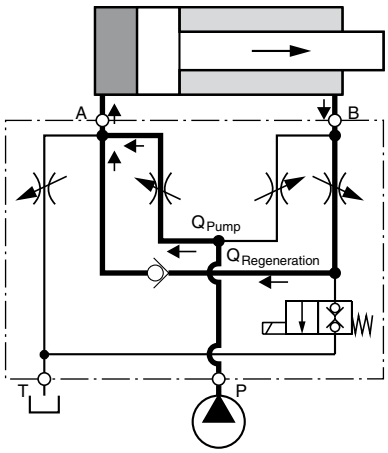

Cylinder extending
standard mode
(high force)

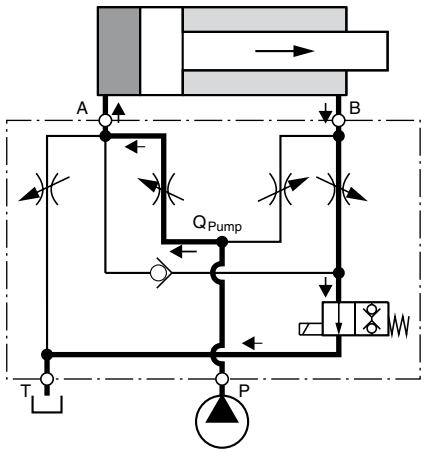

Flow rate in % of nominal flow

Size [1]	spool	Port					
		A-T	P-A	P-B	B-A (R-valve)	B-A (hybrid)	B-T (hybrid)
D41FBR/Z	31/32	100 %	50 %	100 %	50 %	45 %	20 %
D91FBR/Z	31/32	100 %	50 %	100 %	50 %	50 %	25 %
D111FBR/Z	31/32	100 %	50 %	100 %	50 %	50 %	20 %

[1] D31FB: For size NG10 please refer solution with sandwich- and adaptor plates "A10-1664 / A10-1665L / H10-1662 / H10-1666L" in chapter 12.

3

D*1FB

D		1	F	B									
Directional control valve	Size	NG06 pilot	Proportional control	Dynamics standard	Function	Flow	Spool position	Pilot connection	Seal	Solenoid description (other voltage on request)	Electronic options	Valve options	Design series (not required for ordering)

Code	Nominal size
3	NG10 / CETOP 05
4	NG16 / CETOP 07
9 [1]	NG25 / CETOP 08
11	NG32 / CETOP 10

Code	Valve options
0	Standard for spool type B, E, R
8 [9][10][11]	Monitor switch
L [8]	Hybrid valve 24 V normally closed for spool type Z

Code	Electronic options
W [6]	EN 175301-803
J [6][7]	DT04-2P "Deutsch"

Code	Solenoid voltage
J	24 V/1,1A
K	12 V/2,5A

Code	Seal
N	NBR
V	FPM

Code	Inlet	Drain
1	Internal	External
2	External	External
4	Internal	Internal
5	External	Internal

Code	Design
C	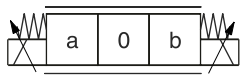
E [5]	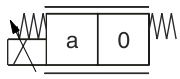
K [5]	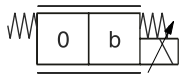

Standard		NEW: Regenerative function [2]		NEW: Hybrid function [2][3]	
Code	Spool type	Code	Spool type	Code	Spool type
Overlap		Overlap		Overlap	
E01	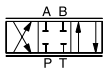	R31		Z31	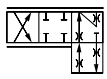
E02	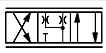	R32		Z32	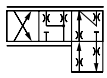
B31	$Q_B = Q_A/2$ 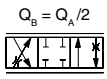				
B32	$Q_B = Q_A/2$ 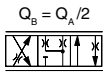				

Code	Flow [l/min] at Δp = 5 bar per metering edge			
	D31	D41	D91	D111
B	–	100 [4][5]	–	–
C	75 [5]	130 [4][5]	–	–
D	90 [5]	–	–	–
E	120	–	250 [4][5]	–
F	–	200	-	–
H	–	–	400	–
L	–	–	–	1000

Short delivery time for all variations

[1] With enlarged connections Ø 32 mm.
[2] For regenerative and hybrid function at D31FB (NG10) please refer solutions with sandwich - and adaptor plates "A10-1664 / A10-1665L / H10-1662 / H10-1666L" in chapter 12.

D31FB spool type: R31 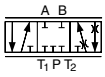 R32 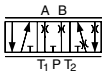

[3] Not for D31FB.
[4] Not for spool type B31 und B32.
[5] Not for regenerative and hybrid function.
[6] Please order plugs separately. See accessories.
[7] Not for hybrid function.
[8] See page "regenerative and hybrid function" (not for D31FB).
[9] Not for D111FBZ*.
[10] Monitor switch for hybrid valves: code 8 includes options of code L (24 V normally closed).
[11] Please order female connector M12x1 separately (see accessories , female connector M12x1 (order no.: 5004109).

D_1FB UK.indd RH 08.10.2015

D*1FB OBE

D		1	F	B									
Directional control valve	Size	NG06 pilot	Proportional control	Onboard electronics	Function	Flow	Spool position	Pilot connection	Seal	Command signal	Option	Valve options	Design series (not required for ordering)

Code	Nominal size
3	NG10 / CETOP 05
4	NG16 / CETOP 07
9 [1]	NG25 / CETOP 08
11	NG32 / CETOP 10

Standard		Regenerative function [2]		Hybrid function [2] [3]	
Code	Spool type	Code	Spool type	Code	Spool type
Overlap		Overlap		Overlap	
E01	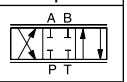				
E02	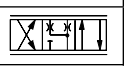				
B31	$Q_B = Q_A/2$ 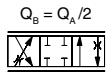	R31	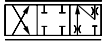	Z31	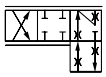
B32	$Q_B = Q_A/2$ 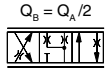	R32		Z32	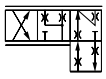

Code	Flow [l/min] at Δp = 5 bar per metering edge			
	D31	D41	D91	D111
B	–	100 [4] [5]	–	–
C	75 [5]	130 [4] [5]	–	–
D	90 [5]	–	–	–
E	120	–	250 [4] [5]	–
F	–	200	-	–
H	–	–	400	–
L	–	–	–	1000

Code	Command signal [7]	Function	Connection [6]
F0 [9]	0...±10 V	0...+10 V > P-B	6 + PE
G0 [8]	0...±20 mA	0...+20 mA > P-B	6 + PE
M0 [8] [9]	0...±10 V	0...+10 V > P-A	6 + PE
S0	4...20 mA	12...20 mA > P-A	6 + PE
W5 [8] [9]	0...±10 V 4...20 mA	0...+10 V > P-A 12...20 mA > P-A	11 + PE

Code	Seal
N	NBR
V	FPM

Code	Inlet	Drain
1	Internal	External
2	External	External
4	Internal	Internal
5	External	Internal

Code	Design
C	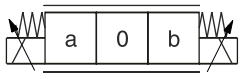
E [5]	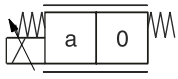
K [5]	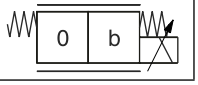

Code	Valve options
0	Standard for spool type B, E, R
8 [11] [12] [13]	Monitor switch
L [10]	Hybrid valve 24V normally closed for spool type Z

Parametrizing cable OBE → RS232, item no. 40982923

Short delivery time for all variations

[1] With enlarged connections Ø 32 mm.
[2] For regenerative and hybrid function at D31FB (NG10) please refer solutions with sandwich - and adaptor plates "A10-1664 / A10-1665L / H10-1662 / H10-1666L" in chapter 12.

D31FB spool type: R31 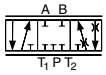 R32 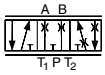

[3] Not for D31FB.
[4] Not for spool type B31 und B32.
[5] Not for regenerative and hybrid function.
[6] Please order plugs seperately, see accessories.
[7] For 1 solenoid 0...+10 V respectively 4...20 mA.
[8] Not for spool position E and K.
[9] F0, M0 potentiometer supply, W5 command channel & potentiometer supply.
[10] See page "regenerative and hybrid function" (not for D31FB).
[11] Not for D111FBZ*.
[12] Monitor switch for hybrid valves: code 8 includes options of code L (24 V normally closed).
[13] Please order female connector M12x1 separately (see accessories , female connector M12x1 (order no.: 5004109)

3

General					
Design		Pilot operated DC valve			
Actuation		Proportional solenoid			
Size		**NG10 (CETOP 05)**	**NG16 (CETOP 07)**	**NG25 (CETOP 08)**	**NG32 (CETOP 10)**
Mounting interface		DIN 24340 / ISO 4401 / CETOP RP121 / NFPA			
Mounting position		unrestricted			
Ambient temperature	[°C]	-20...+60			
$MTTF_D$ value [1]	[years]	75			
Weight (OBE)	[kg]	8.6 (9.3)	11.9 (12.6)	20.4 (21.1)	68 (68.7)
Vibration resistance	[g]	10 Sinus 5...2000 Hz acc. IEC 68-2-6 30 Random noise 20...2000 Hz acc. IEC 68-2-36 15 Shock acc. IEC 68-2-27			
Hydraulic					
Max. operating pressure	[bar] [bar]	Pilot drain internal: P, A, B, X 350; T, Y 185 Pilot drain external: P, A, B, T, X 350; Y 185			
Fluid		Hydraulic oil according to DIN 51524 ... 535, other on request			
Fluid temperature	[°C]	-20...+60 (NBR: -25...+60)			
Viscosity permitted	[cSt] / [mm²/s]	20...400			
Viscosity recommended	[cSt] / [mm²/s]	30...80			
Filtration		ISO 4406 (1999); 18/16/13			
Nominal flow at Δp=5 bar per control edge [2]	[l/min]	75/90/120	130/200	250/400	1000
Leakage at 100 bar	[ml/min]	100	200	600	1000
Opening point (OBE)	[%]	see flow characteristics (set to 10 command signal)			
Pilot supply pressure	[bar] [bar] [bar]	min. 30 (+ T/Y pressure) max. 350 optimal dynamics at 50			
Pilot flow at 100 bar	[l/min]	<0.5	<1.2	<1.2	<1.2
Pilot flow, step response	[l/min]	2.0	1.9	4.5	18
Static / Dynamic					
Step response at 100 % step	[ms]	50	75	100	180
Hysteresis	[%]	<5			
Electrical characteristics					
Duty ratio	[%]	100 ED; CAUTION: Coil temperature up to 150 °C possible			
Protection class		Standard (as per EN175301-803) IP65 in accordance with EN 60529 DT04-2P "Deutsch" IP69K (with correctly mounted plug-in connector)			
Solenoid	Code	K		J	
Supply voltage	[V]	12		24	
Current consumption	[A]	2.5		1.1	
Resistance	[Ohm]	4.4		18.6	
Solenoid connection		Connector as per EN 175301-803 (code W), DT04-2P "Deutsch" connector (code J). Solenoid identification as per ISO 9461.			
Wiring min.	[mm²]	3x1.5 (AWG 16) overall braid shield			
Wiring length max.	[m]	50			

[1] If valves with onboard electronics are used in safety-related parts of control systems, in case the safety function is requested, the valve electronics voltage supply is to be switched off by a suitable switching element with sufficient reliability.

[2] Flow rate for different Δp per control edge:

$$Q_x = Q_{Nom.} \cdot \sqrt{\frac{\Delta p_x}{\Delta p_{Nom.}}}$$

D_1FB UK.indd RH 08.10.2015

Electrical characteristics (D*1FB OBE)		
Duty ratio	[%]	100 ED; CAUTION: coil temperature up to 150 °C possible
Protection class		IP65 in accordance with EN 60529 (with correctly mounted plug-in connector)
Supply voltage/ripple DC	[V]	18...30, ripple < 5 % eff., surge free
Current consumption max.	[A]	2.0
Pre fusing medium lag	[A]	2.5
Input signal voltage		
Codes F0, M0, W5	[V]	+10...0...-10, ripple < 0.01 % eff., surge free, Ri = 100 kOhm
Code G0	[V]	+20...0...-20, ripple < 0.01 % eff., surge free, Ri = <250 Ohm
Codes S0 & W5 current	[mA]	4...12...20, ripple < 0.01 % eff., surge free, Ri = <250 Ohm < 3.6 mA = enable off, > 3.8 mA = enable on (acc. to NAMUR NE43)
Differential input max.		
Codes F0, M0 G0 & S0	[V]	30 for terminal D and E against PE (terminal G)
	[V]	11 for terminal D and E against 0V (terminal B)
Code W5	[V]	30 for terminal 4 and 5 against PE (terminal PE)
	[V]	11 for terminal 4 and 5 against 0V (terminal 2)
Channel recall signal	[V]	0...2.5: off / 5...30: on / Ri = 100 kOhm
Adjustment ranges Min	[%]	0...50
Max	[%]	50...100
Ramp	[s]	0...32.5
Interface		RS 232, parametrizing connection 5pole
EMC		EN 61000-6-2, EN 61000-6-4
Central connection		
Codes F0, M0 G0 & S0		6 + PE acc. to EN 175201-804
Code W5		11 + PE acc. to EN 175201-804
Wiring min.		
Codes F0, M0 G0 & S0	[mm²]	7 x 1.0 (AWG16) overall braid shield
Code W5	[mm²]	11 x 1.0 (AWG16) overall braid shield
Wiring length max.		50

Electrical characteristics (hybrid option)				
Duty ratio	[%]	100 ED; CAUTION: Coil temperature up to 150 °C possible		
Protection class		IP 65 in accordance with EN 60529 (with correctly mounted plug-in connector)		
		D41	**D91**	**D111**
Supply voltage	[V]	24	24	24
Tolernace supply voltage	[%]	±10	±10	±10
Current consumption	[A]	1.21	0.96	1.29
Power consumption	[W]	29	23	31
Solenoid connection		Connector as per EN 175301-803		
Wiring min.	[mm²]	3 x 1.5 recommended		
Wiring length max.	[m]	50 recommended		

With electrical connections the protective conductor (PE ⏚) must be connected according to the relevant regulations.

D*1FB B/E Flow characteristics

at Δp = 5 bar per metering edge

Spool code **E01/02**

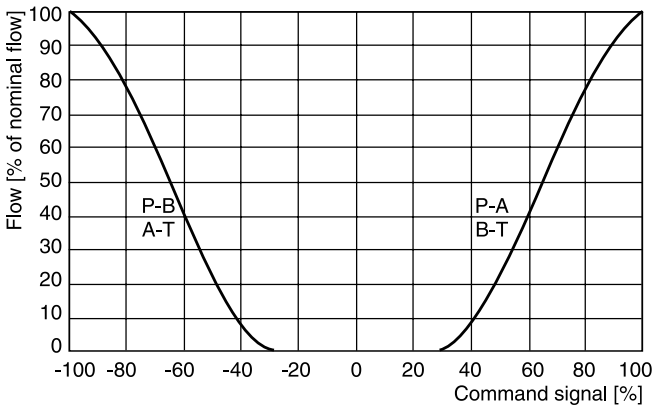

Spool code **B31/32***

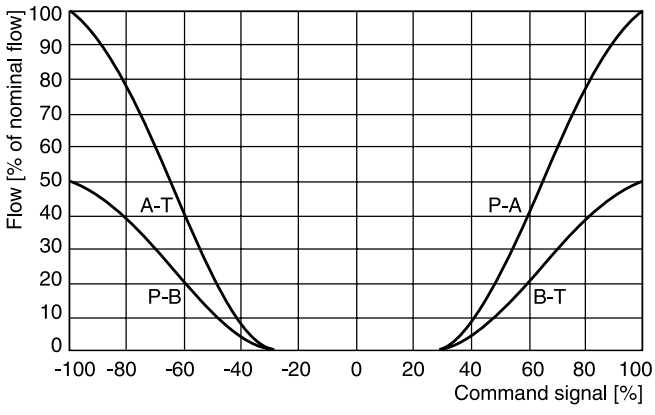

All characteristic curves measured with HLP46 at 50 °C.

D_1FB UK.indd RH 08.10.2015

3

D*1FB B/E OBE
Flow characteristics
(set to opening point 10 %)
at Δp = 5 bar per metering edge

Spool code **E01/02**

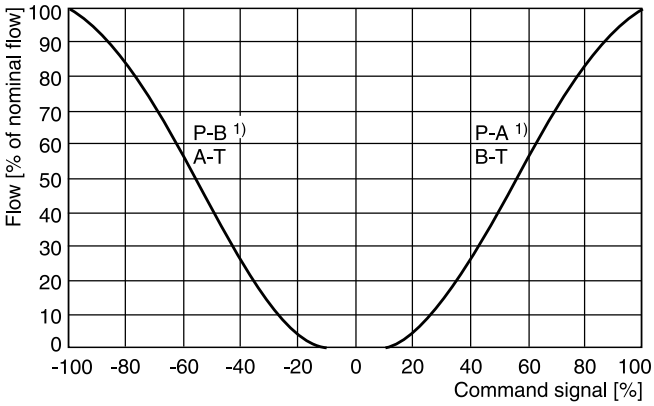

Spool code **B31/32**

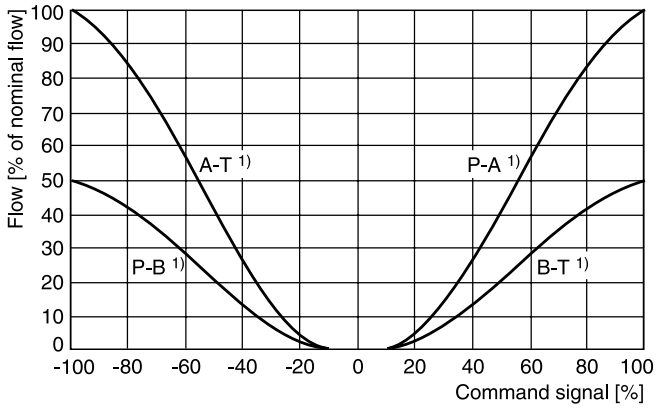

D*1FB R/Z (regenerative and hybrid)
D41FB R/Z
Spool code **R/Z31/32**

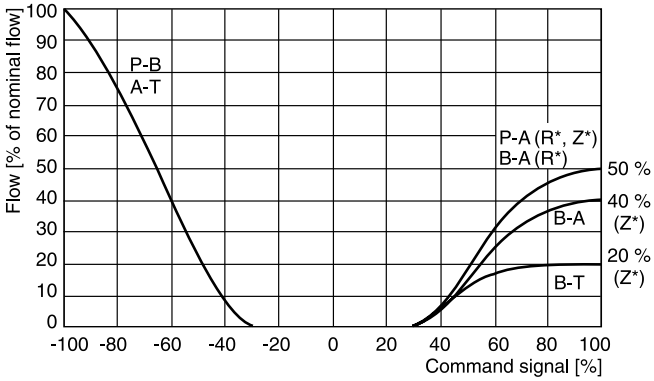

D91FB R/Z
Spool code **R/Z31/32**

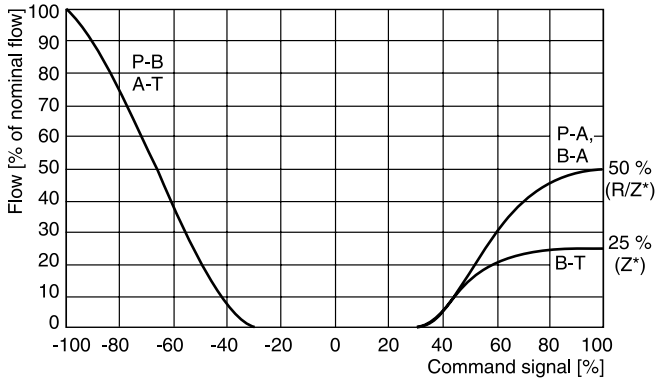

D41FB R/Z OBE
Spool code **R/Z31/32**
(set to opening point 10 %)

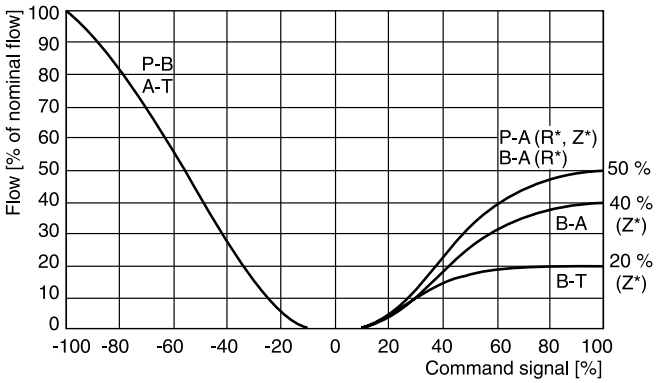

D91FB R/Z OBE
Spool code **R/Z31/32**

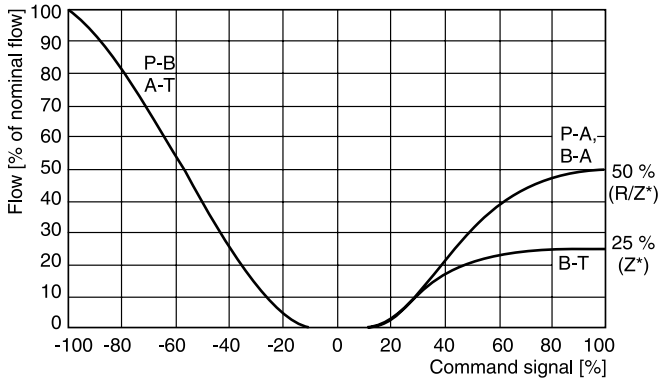

All characteristic curves measured with HLP46 at 50 °C.

[1] Flow direction depending on ordering code.

Electrical characteristics of position control M12x1 as per IEC 61076-2-101

Supply voltage	[VDC]	24
Tolernace supply voltage	[%]	±20
Ripple supply voltage	[%]	≤10
Polarity protection	[V]	300
Current consumption without load	[mA]	≤20
Switching hysteresis	[mm]	<0.06
Max. output current per channel, ohmic	[mA]	250
Ambient temperature	[°C]	-20 … +60
Protection		IP65 acc. EN 60529
CE conform		EN 61000-4-2 / EN 61000-4-4 / EN 61000-4-6 [1)] / ENV 50140 / ENV 50204
Min. distance to next AC solenoid	[m]	0.1
Interface		M12x1 to IEC 61076-2-101

M12 pin assignment

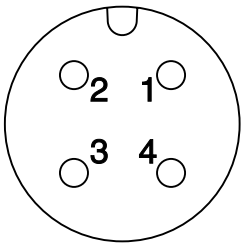

1 + U_S 19.2...28.8 V
2 Out B: normally open
3 0V
4 Out A: normally closed

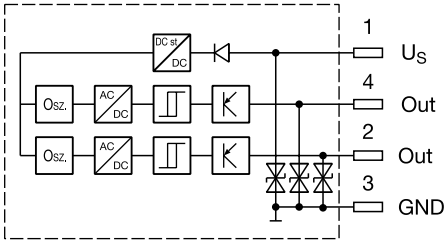

Outputs: Open collector

Signal	Output A (pin 4)	Output B (pin 2)
neutral	closed	closed
	open	closed
	closed	open

The neutral position is monitored. The signal changes after less than 10 % of the spool stroke.

Please order female connector M12x1 separately (see accessories, female connector M12x1 (order no.: 5004109).

[1)] Only guaranted with screened cable and female connector

3

Code F0, M0
6 + PE acc. to EN 175201-804

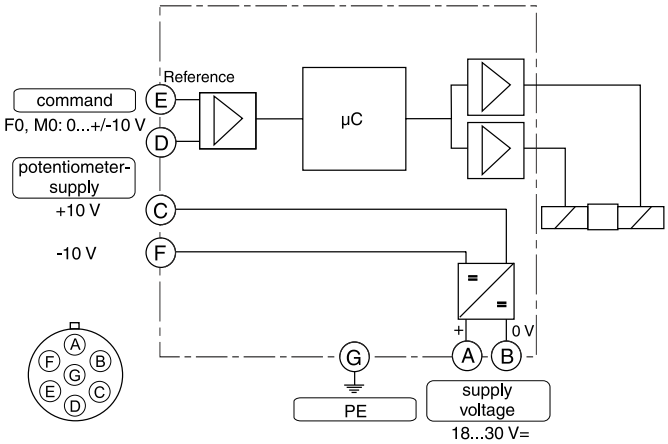

Code G0, S0
6 + PE acc. to EN 175201-804

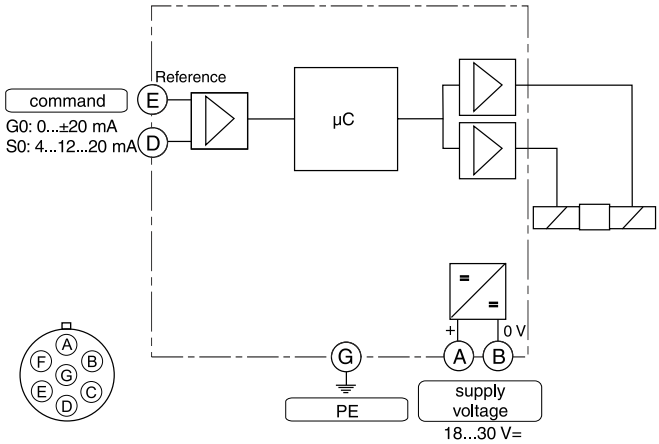

Code W5
11 + PE acc. to EN 175201-804

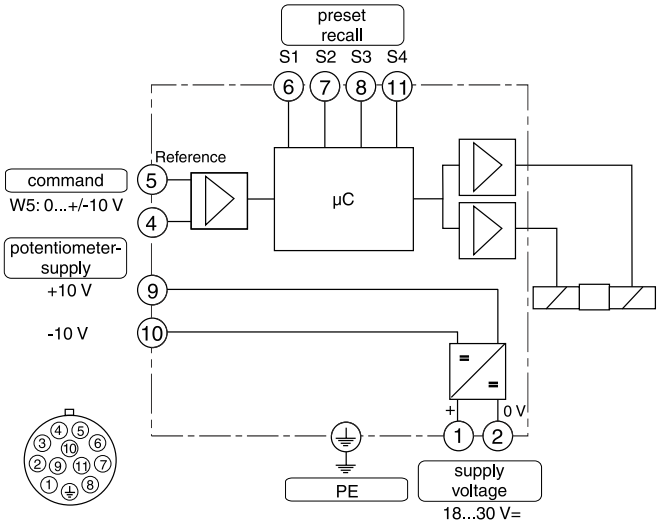

ProPxD interface program

The ProPxD software permits comfortable parameter setting for the module electronics. Via the clearly arranged entry mask the parameters can be noticed and modified. Storage of complete parameter sets is possible as well as printout or record as a text file for further documentation. Stored parameter sets may be loaded anytime and transmitted to other valves. Inside the electronics a non-volatile memory stores the data with the option for recalling or modification.

The PC software can be downloaded free of charge at www.parker.com/euro_hcd – see page “Support" or directly at www.parker.com/propxd.

Features

- Comfortable editing of all parameters
- Depiction and documentation of parameter sets
- Storage and loading of optimized parameter adjustments
- Executable with all actual Windows® operating systems from Windows® XP upwards
- Plain communication between PC and electronics via serial interface RS232C

The parametrizing cable may be ordered under item no. 40982923.

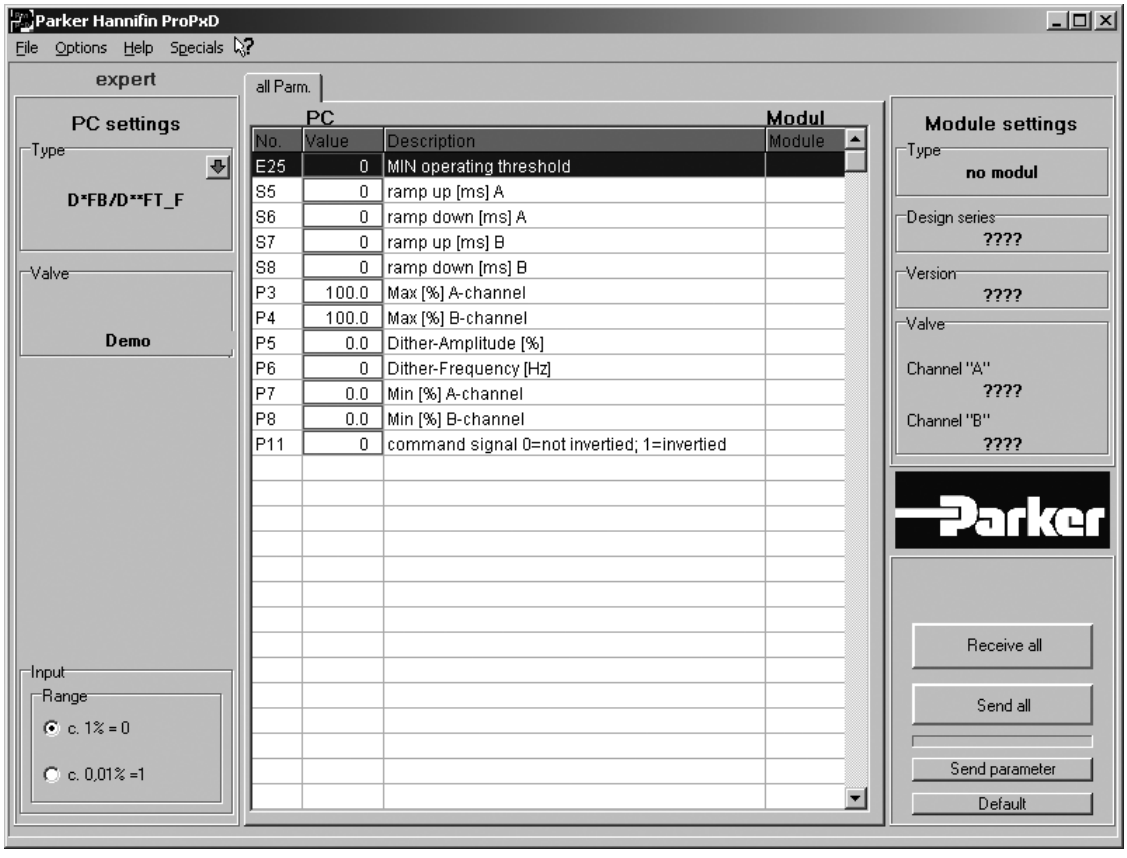

3

Pilot oil inlet (supply) and outlet (drain)

○ open, ● closed

Pilot oil Inlet	Pilot oil Drain	B	C
internal	external	○	●
external	external	●	●
internal	internal	○	○
external	internal	●	○

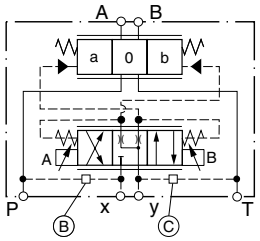

D31FBB/E

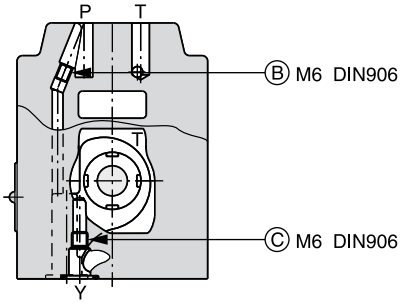

(drawn offset)

D31FBR

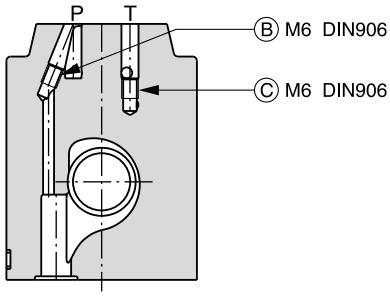

D41FBB/E

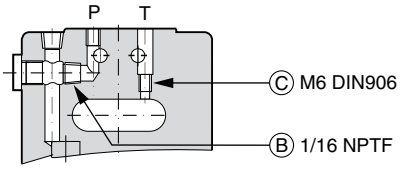

D41FBR

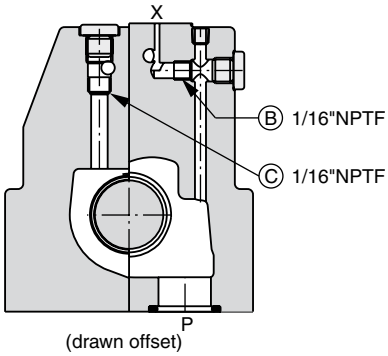

(drawn offset)

D41FBZ

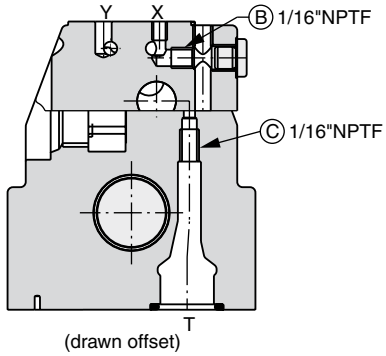

(drawn offset)

D91FBB/E

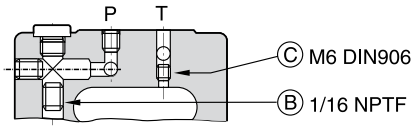

D91FBR

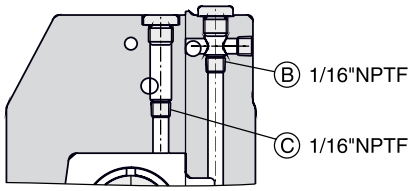

(drawn offset)

D91FBZ

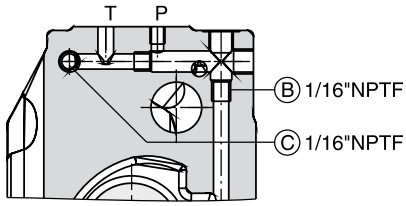

D111FBB/E

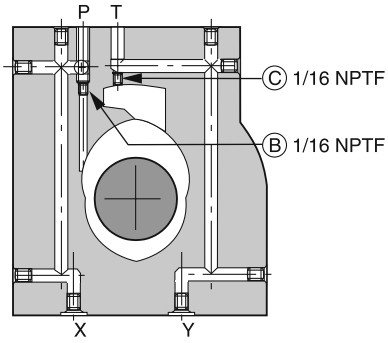

D111FBR

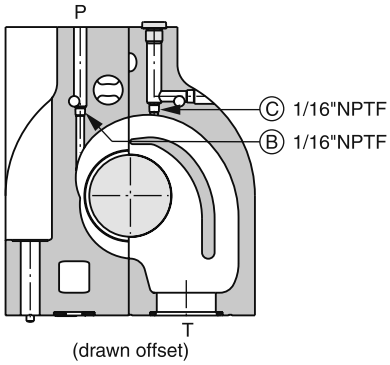

(drawn offset)

D111FBZ

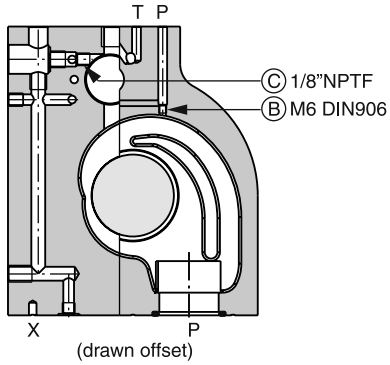

(drawn offset)

D_1FB UK.indd RH 08.10.2015

D31FB

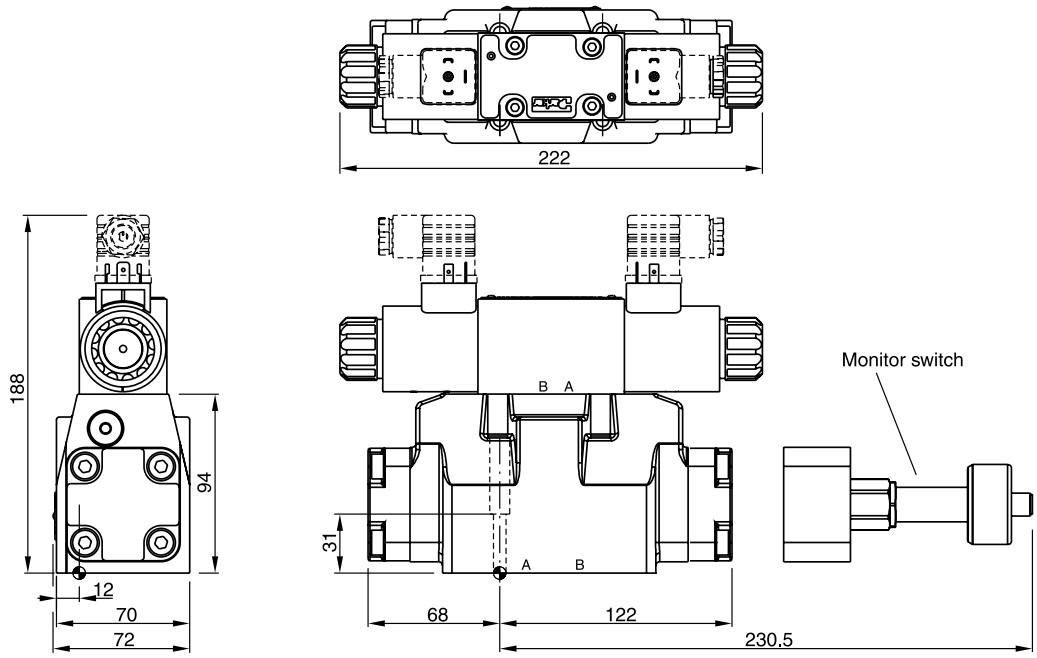

Regenerative and hybrid function with additional plate "H10-1666L / H10-1662 / A10-1664 / A10-1665L", see chapter 12.

Surface finish	Kit			Kit
R_{max}6.3 ▱ 0.01/100	BK385	4x M6x40 ISO 4762-12.9	13.2 Nm ±15 %	NBR: SK-D31FB FPM: SK-D31FB-V

D41FB

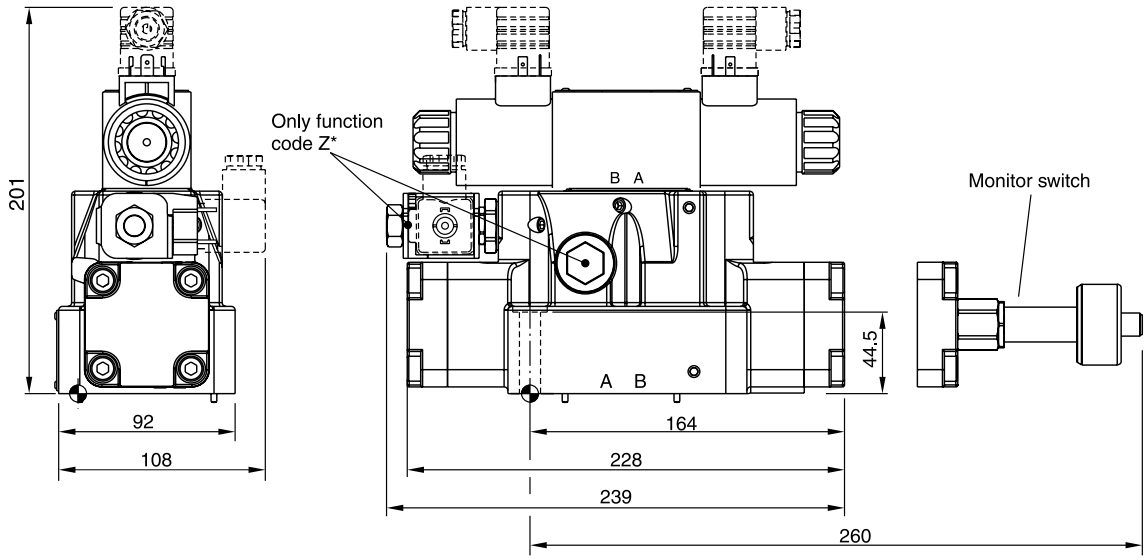

Surface finish	Kit			Kit
R_{max}6.3 ▱ 0.01/100	BK320	2x M6x55 4x M10x60 ISO 4762-12.9	13.2 Nm ±15 % 63 Nm ±15 %	NBR: SK-D41FB FPM: SK-D41FB-V

3

D91FB

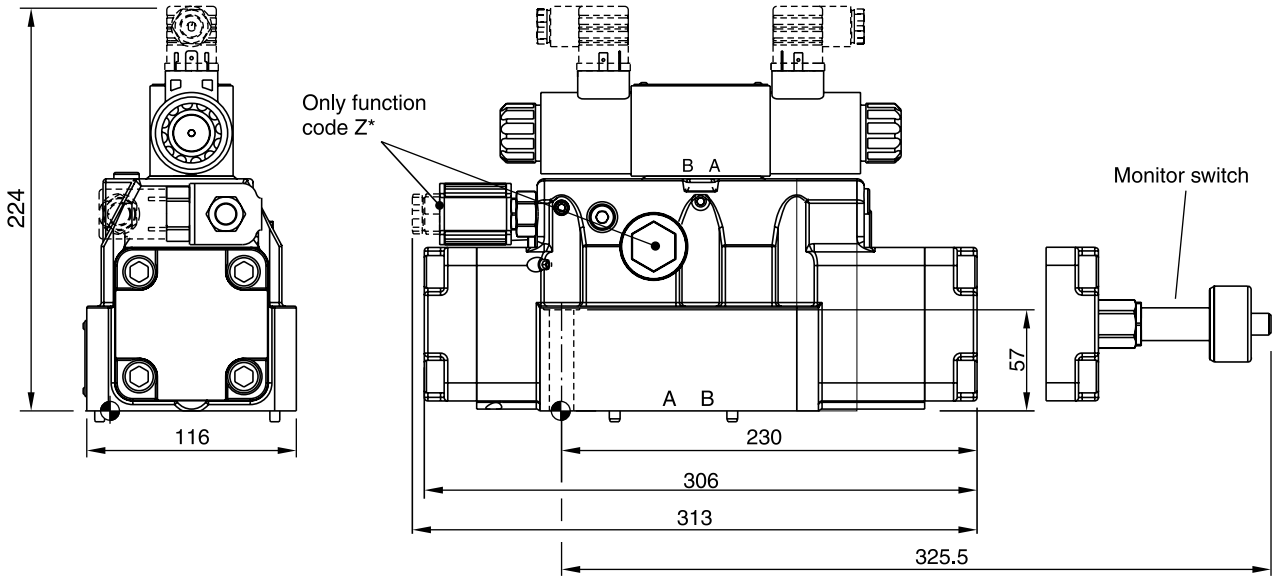

Surface finish	Kit			Kit
R_{max}6.3 / 0.01/100	BK360	6x M12x75 ISO 4762-12.9	108 Nm ±15 %	NBR: SK-D91FB FPM: SK-D91FB-V

D111FB

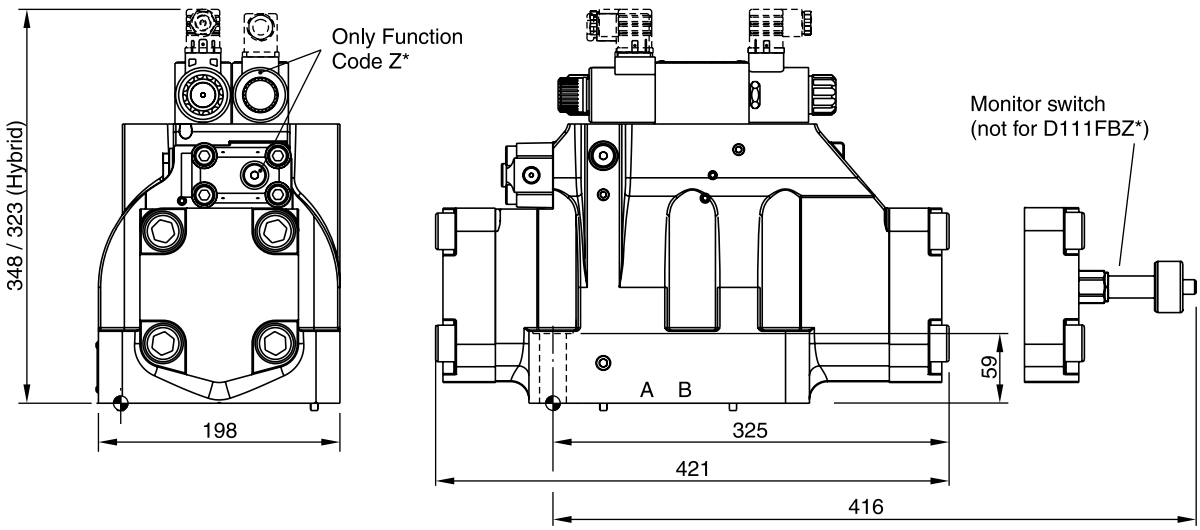

Surface finish	Kit			Kit
R_{max}6.3 / 0.01/100	BK386	6x M20x90 ISO 4762-12.9	517 Nm ±15 %	NBR: SK-D111FB FPM: SK-D111FB-V

Dimension with DT04-2P "Deutsch" Connector

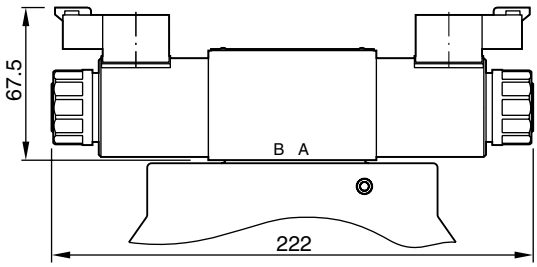

3

D31FB OBE

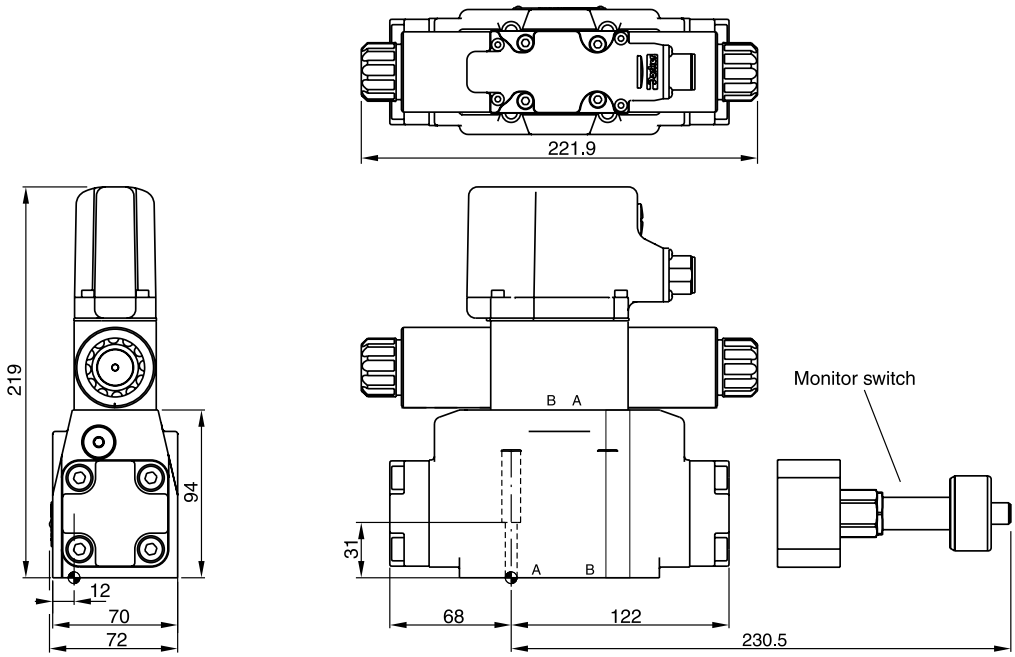

Regenerative and hybrid function with additional plate "H10-1666L / H10-1662 / A10-1664 / A10-1665L", see chapter 12.

Surface finish	Kit			Kit
R_{max}6.3 ▱ 0.01/100	BK385	4x M6x40 ISO 4762-12.9	13.2 Nm ±15 %	NBR: SK-D31FB FPM: SK-D31FB-V

D41FB OBE

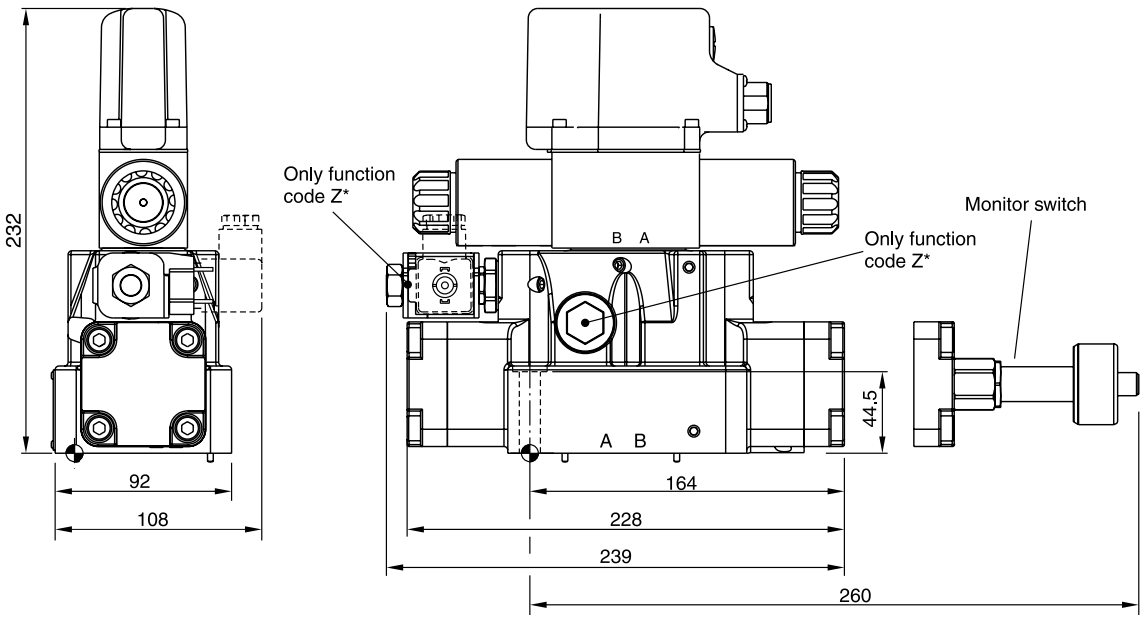

Surface finish	Kit			Kit
R_{max}6.3 ▱ 0.01/100	BK320	2x M6x55 4x M10x60 ISO 4762-12.9	13.2 Nm ±15 % 63 Nm ±15 %	NBR: SK-D41FB FPM: SK-D41FB-V

D91FB OBE

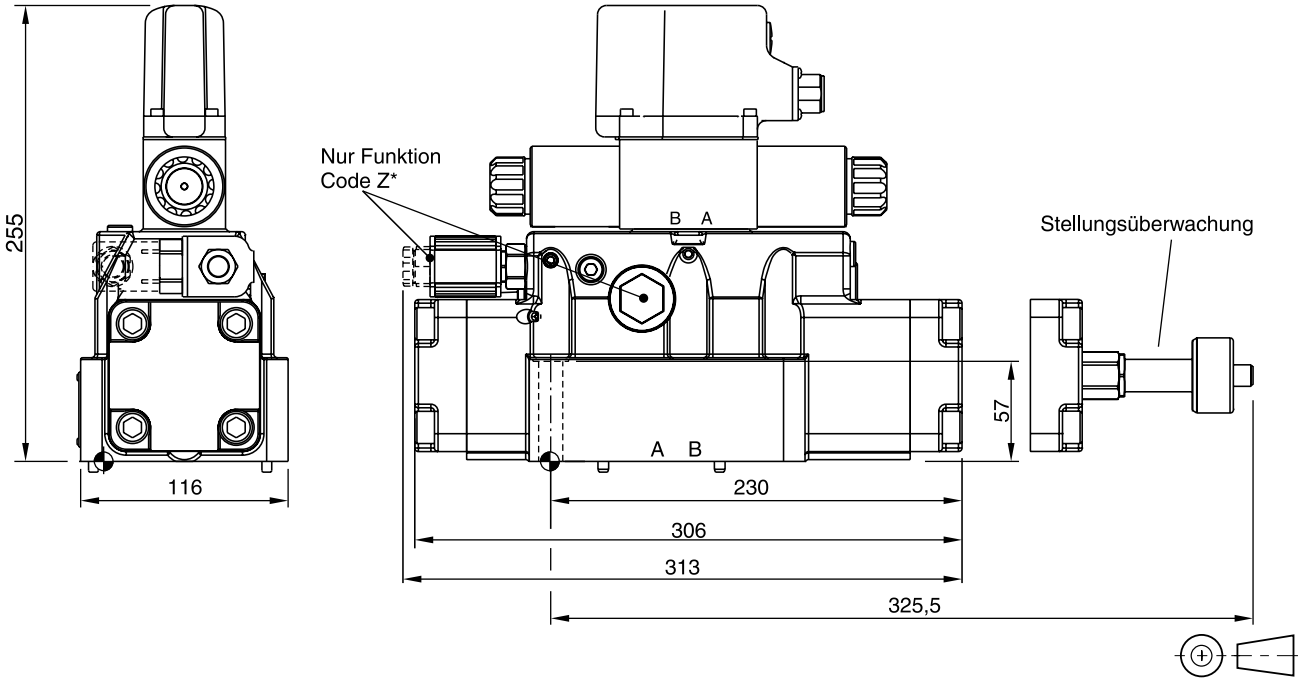

Surface finish	Kit			Kit
R_{max}6.3 ▱ 0.01/100	BK360	6x M12x75 ISO 4762-12.9	108 Nm ±15 %	NBR: SK-D91FB FPM: SK-D91FB-V

D111FB OBE

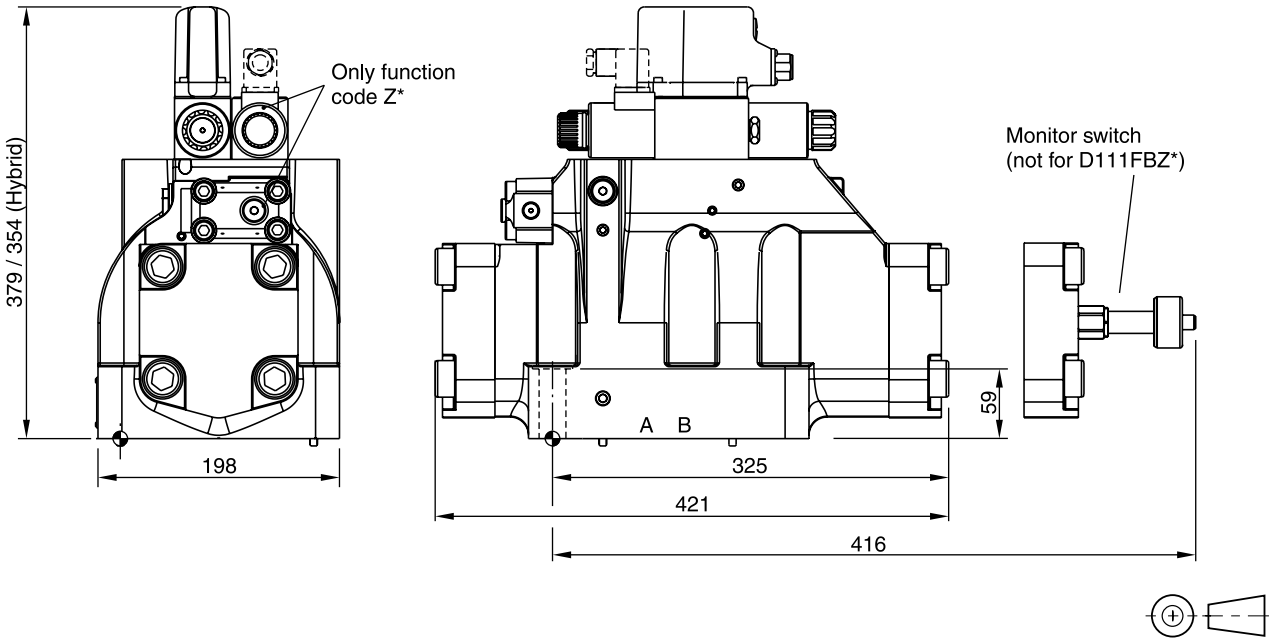

Surface finish	Kit			Kit
R_{max}6.3 ▱ 0.01/100	BK386	6x M20x90 ISO 4762-12.9	517 Nm ±15 %	NBR: SK-D111FB FPM: SK-D111FB-V

3

The proportional pressure reducing valves series D1FV are available with and without onboard electronics (OBE).

D1FV OBE

The digital onboard electronics is situated in a robust metal housing, which allows the usage under rough environmental conditions.

The nominal values are factory set. The cable for connection to a serial RS232 interface is available as accessory.

D1FV for external electronics

The parameters can be saved, changed and duplicated in combination with the digital power amplifier PWD00A-400. The value parameters can be edited with the common ProPxD software for both versions.

The D1FV valves control the pressure in the A- or B-ports using the barometric feedback principle.

Valves with explosion proof solenoids Ex e mb II see catalogue HY11-3343.

Download: www.parker.com/euro_hcd - see “Literature”

Technical Features

- Barometric feedback
- 3 command options for D1FV OBE: ±10 V, 4...20 mA, ±20 mA
- High repeatability from valve to valve
- Low hysteresis
- Manual override
- Pressure stages 25 bar and 45 bar

D1FV

D1FV OBE

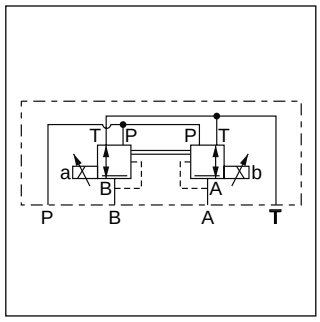

Function C

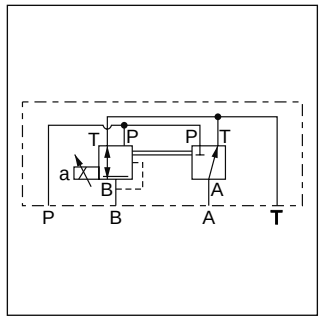

Function E

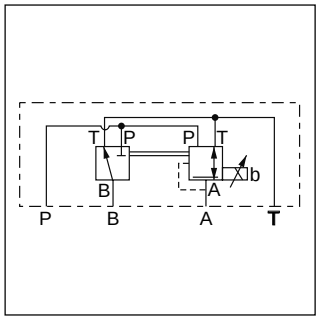

Function K

D1FV*3 OBE

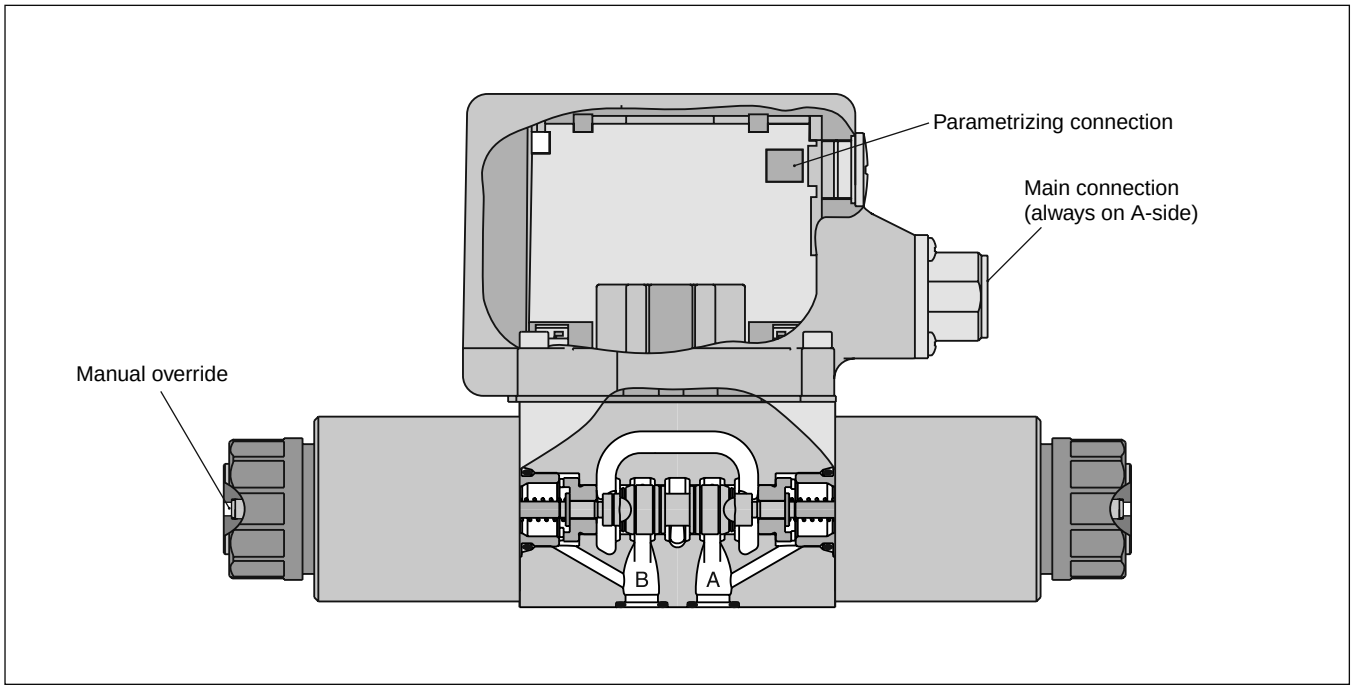

D1FV

D	1	F	V	E02			0		K		3	
Proportional pressure reducing valve	Size DIN NG06 CETOP 03 NFPA D03	Proportional control		Spool type	Pressure range	Control function		Seals	Solenoid 12 V / 2.2 A	Connector	Spool/ body design	Design series (not required for ordering)

Code	Pressure range
C	**25 bar**
D	**45 bar**

Code	Control function
C	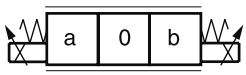
E	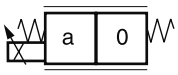
K	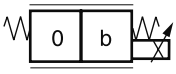

Code	Connector
W	**Connector as per EN 175301-803**
J	**Connector DT04-2P "Deutsch"**

Code	Seals
N	**NBR**
V	**FPM**

3

D1FV OBE (with onboard electronics)

D	1	F	V	E02			0					3	
Proportional pressure reducing valve	Size DIN NG06 CETOP 03 NFPA D03	Proportional control		Spool type	Pressure range	Control function		Seals	Input signal	Electronic attachment		Spool/ body design	Design series (not required for ordering)

Code	Pressure range
C	**25 bar**
D	**45 bar**

Code	Control function
C	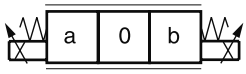
E	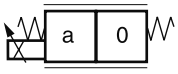
K	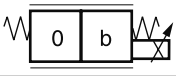

Spool position				
Code	Input signal [1]	Function	Port	Options
F0	**0...+/-10 V**	**0...+10 V > P-A**	**6 + PE**	**Potentiometer supply**
G0	**0...+/-20 mA**	**0...+20 mA > P-A**	**6 + PE**	**—**
M0	**0...+/-10 V**	**0...+10 V > P-B**	**6 + PE**	**Potentiometer supply**
S0	**4...20 mA**	**12...20 mA > P-A**	**6 + PE**	**—**
W5 [2]	**0...+/-10 V** **4...20 mA** **0...+/-20 mA**	**0...+10 V > P-A** **12...20 mA > P-A** **0...+20 mA > P-A**	**11 + PE**	**Command channel & potentiometer supply**

Code	Seals
N	**NBR**
V	**FPM**

Short delivery time for all variations

Please order connector separately, see chapter 3 accessories.
Parametrizing cable OBE → RS232, item no. 40982923

[1] Single solenoid always 0...+10 V respectively 4...20 mA.

[2] Factory set ±10 V on delivery.

D1FV UK.indd RH 17.04.2015

3

General		
Design		Direct operated proportional pressure reducing valve
Actuation		Proportional solenoid
Size		NG06/CETOP 03/NFPA D03
Mounting interface		DIN 24340 / ISO 4401 / CETOP RP121 / NFPA
Mounting position		unrestricted
Ambient temperature	[°C]	-20...+60
$MTTF_D$ value [1)]	[years]	150
Weight (OBE)	[kg]	2.2 (2.9)
Vibration resistance	[g]	10 Sinus 5...2000 Hz acc. IEC 68-2-6 30 Random noise 20...2000 Hz acc. IEC 68-2-36 15 Shock acc. IEC 68-2-27
Hydraulic		
Max. operating pressure	[bar]	Ports P, A, B 350; Port T 185
Max. pressure drop PABT / PBAT	[bar]	350
Fluid		Hydraulic oil according to DIN 51524...535, other on request
Fluid temperature	[°C]	-20...+60 (NBR: -25...+60)
Viscosity permitted recommended	[cSt] / [mm^2/s] [cSt] / [mm^2/s]	20...400 30...80
Filtration		ISO 4406 (1999); 18/16/13
Max. flow	[l/min]	10
Min. primary pressure	[bar]	30 at 25 pressure range, 50 at 45 pressure range
Static / Dynamic		
Hysteresis	[%]	<4
Temperature drift solenoid current	[%/K]	<0.02
Electrical characteristics (D1FV)		
Duty ratio	[%]	100 ED; CAUTION: coil temperature up to 150 °C possible
Protection class		Standard (as per EN175301-803) IP65 in accordance with EN60529 (with correctly mounted plug-in connector); DT04-2P “Deutsch“ IP69K (with correctly mounted plug-in connector)
Supply voltage	[V]	12
Current consumption	[A]	2.2
Resistance	[Ohm]	4.4
Solenoid connection		Connector as per EN 175301-803 (code W), DT04-2P “Deutsch“ connector (code J). Solenoid identification as per ISO 9461.
Wiring min.	[mm^2]	3x1.5 (AWG 16) overall braid shield (code W), "Deutsch" connector DP4 2 Pin (code J)
Wiring length max.	[m]	50 recommended

1) If valves with onboard electronics are used in safety-related parts of control systems, in case the safety function is requested, the valve electronics voltage supply is to be switched off by a suitable switching element with sufficient reliability.

With electrical connections the protective conductor (PE ⏚) must be connected according to the relevant regulations.

Electrical characteristics (D1FV OBE)		
Duty ratio	[%]	100 ED; CAUTION: coil temperature up to 150 °C possible
Protection class		IP65 in accordance with EN 60529 (plugged and mounted)
Supply voltage/ripple DC	[V]	18...30, ripple < 5 % eff., surge free
Current consumption max.	[A]	2.0
Pre fusing medium lag	[A]	2.5
Input signal		
Codes F0 & W5 voltage	[V]	+10...0...-10, ripple < 0.01 % eff., surge free, Ri = 100 kOhm, 0...+10 V ⇒ P -> A
Codes M0 voltage	[V]	+10...0...-10, ripple < 0.01 % eff., surge free, Ri = 100 kOhm, 0...+10 V ⇒ P -> B
Codes S0 & W5 current	[mA]	4...12...20, ripple < 0.01 % eff., surge free, Ri = 200 Ohm, 12...20 mA ⇒ P -> A < 3.6 mA = enable off, > 3.8 mA = enable on (acc. to NAMUR NE43)
Code G0	[mA]	+20...0...-20, ripple < 0.01 % eff., surge free, Ri = 200 Ohm, 0...+20 mA ⇒ P -> A
Differential input max.		
Codes F0, G0, M0 & S0	[V]	30 for terminal D and E against PE (terminal G) 11 for terminal D and E against 0V (terminal B)
Code W5	[V]	30 for terminal 4 and 5 against PE (terminal PE) 11 for terminal 4 and 5 against 0V (terminal 2)
Channel recall signal	[V]	0...2.5: off / 5...30: on / Ri = 100 kOhm
Adjustment ranges Min	[%]	0...50
Adjustment ranges Max	[%]	50...100
Adjustment ranges Ramp	[s]	0...32.5
Interface		RS 232, parametrizing connection 5pole
EMC		EN 61000-6-2, EN 61000-6-4
Central connection		
Codes F0, G0, M0 & S0		6 + PE acc. to EN 175201-804
Code W5		11 + PE acc. to EN 175201-804
Wiring min.		
Codes F0, G0, M0 & S0	[mm²]	7 x 1.0 (AWG16) overall braid shield
Code W5	[mm²]	11 x 1.0 (AWG16) overall braid shield
Wiring length max.		50

Flow characteristics

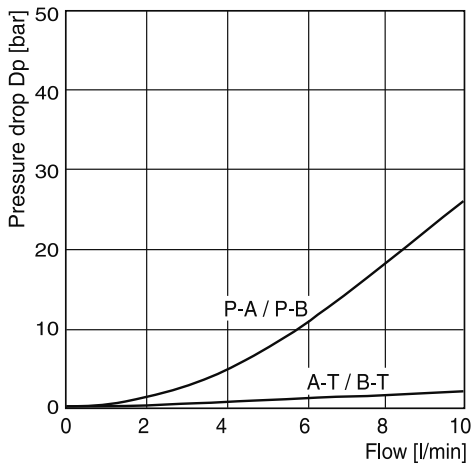

All characteristic curves measured with HLP46 at 50 °C.

3

Code F0, M0
6 + PE acc. to EN 175201-804

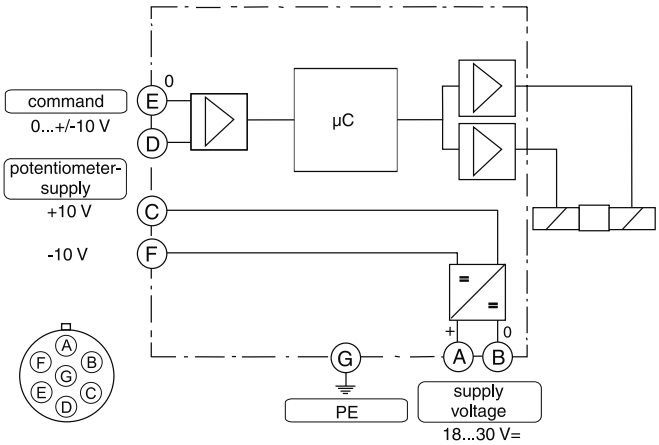

Code G0, S0
6 + PE acc. to EN 175201-804

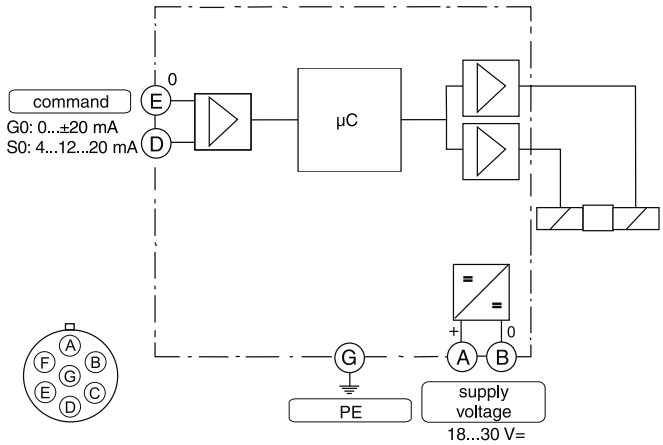

Code W5
11 + PE acc. to EN 175201-804

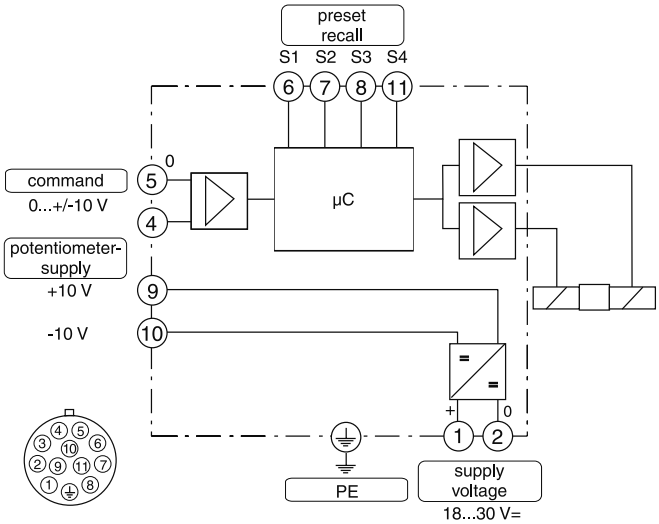

ProPxD interface program

The ProPxD software permits comfortable parameter setting for the module electronics. Via the clearly arranged entry mask the parameters can be noticed and modified. Storage of complete parameter sets is possible as well as printout or record as a text file for further documentation. Stored parameter sets may be loaded anytime and transmitted to other valves. Inside the electronics a non-volatile memory stores the data with the option for recalling or modification.

The PC software can be downloaded free of charge at www.parker.com/euro_hcd – see page “Support" or directly at www.parker.com/propxd.

Features

- Comfortable editing of all parameters
- Depiction and documentation of parameter sets
- Storage and loading of optimized parameter adjustments
- Executable with all actual Windows® operating systems from Windows® XP upwards
- Plain communication between PC and electronics via serial interface RS232C

The parametrizing cable may be ordered under item no. 40982923.

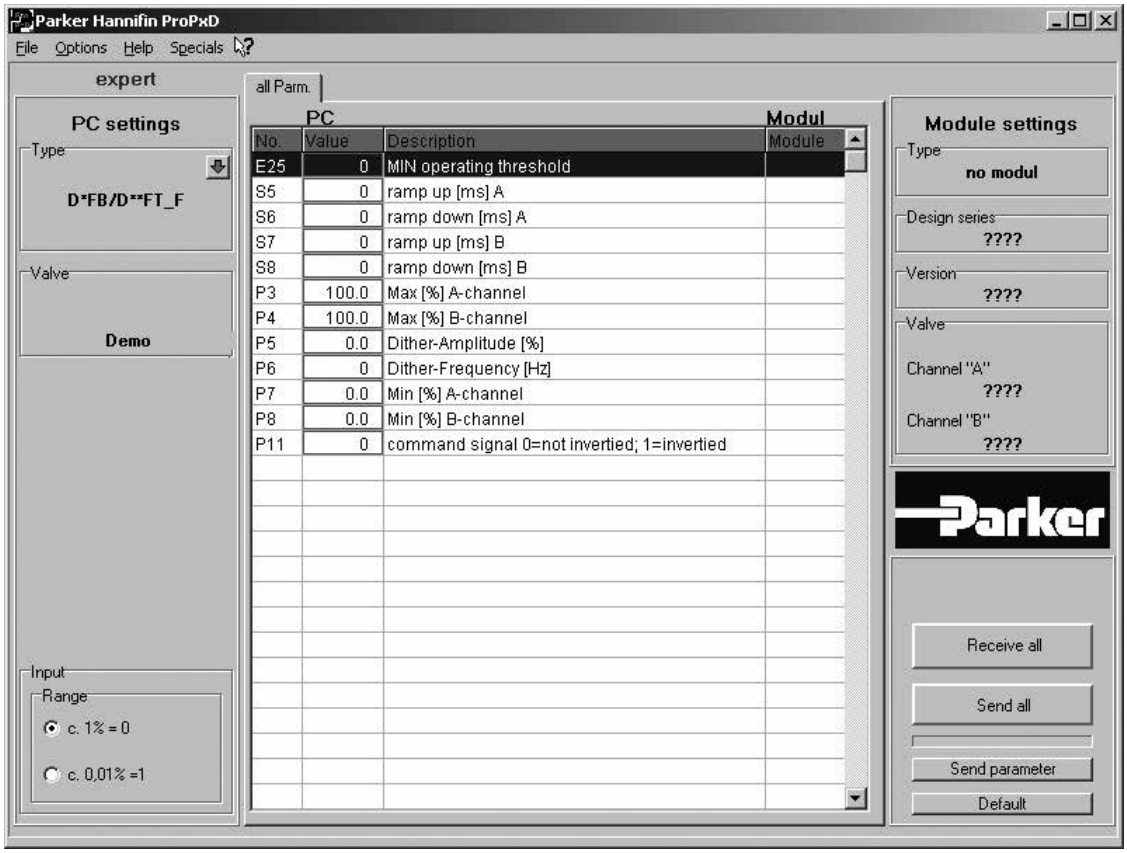

3

D1FV*C

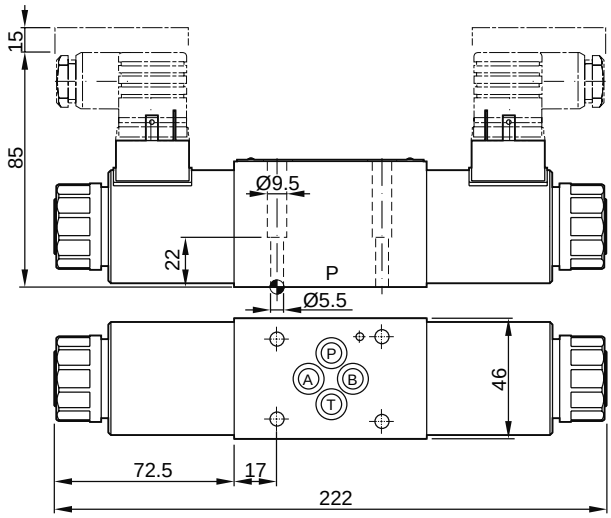

D1FV*E

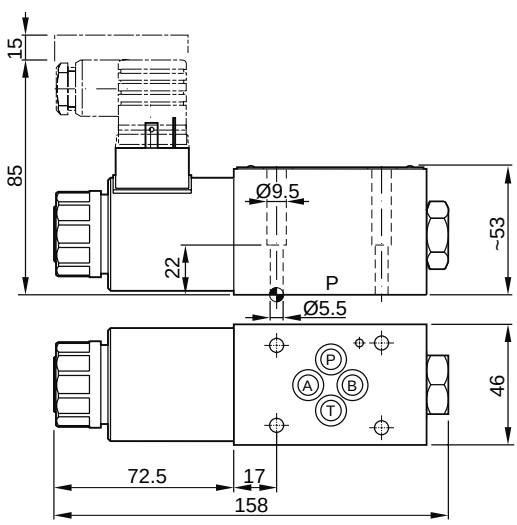

D1FV*K

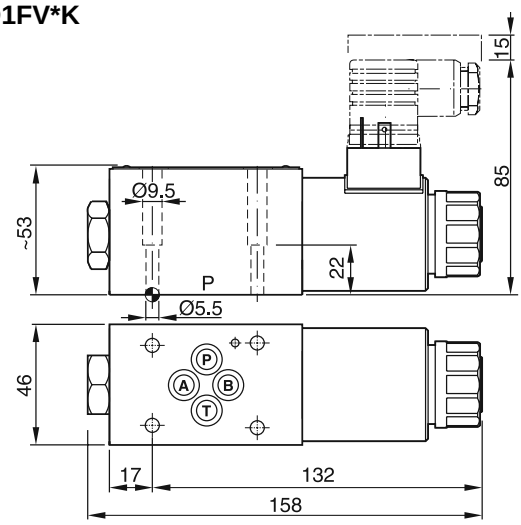

D1FV*C with DT04-2P "Deutsch" connector
(only C style shown)

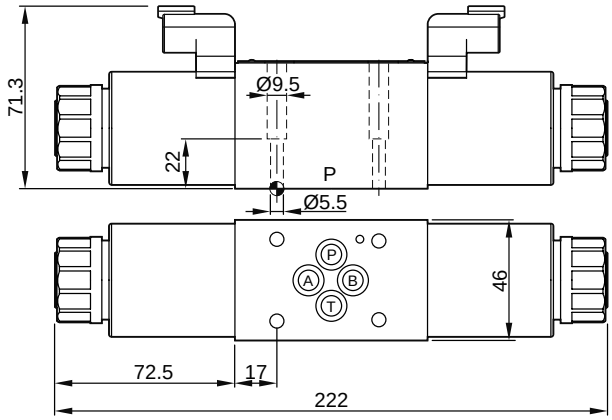

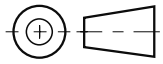

Surface finish	Kit			Kit NBR
R_{max}6.3 ▱ 0.01/100	BK375	4x M5x30 ISO 4762-12.9	7.6 Nm ±15 %	SK-D1FB

D1FV UK.indd RH 17.04.2015

D1FV*C OBE

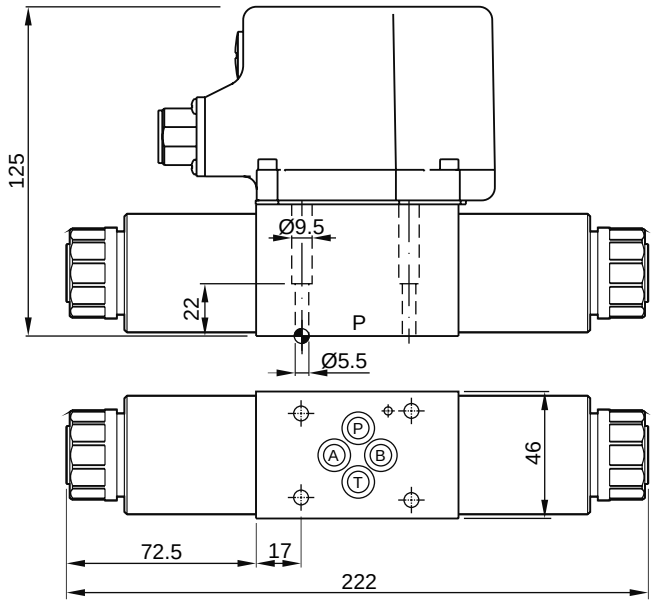

D1FV*E OBE

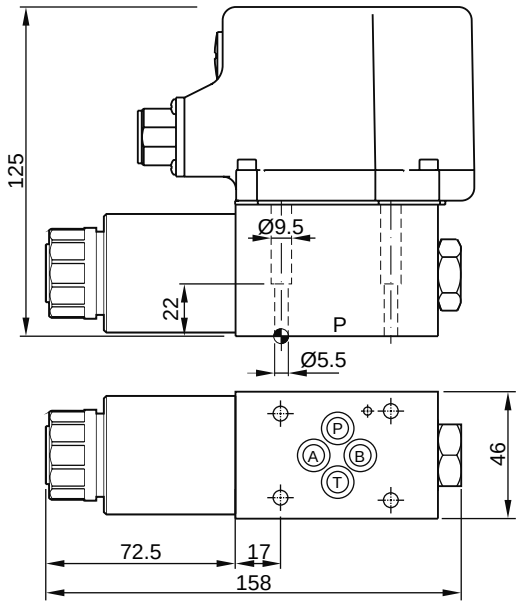

D1FV*K OBE

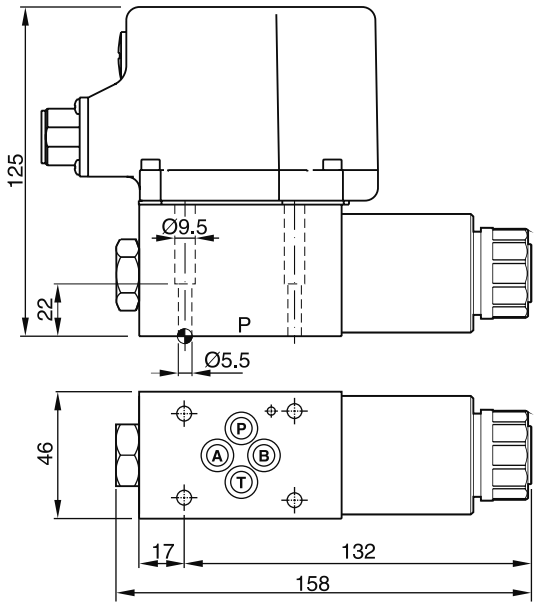

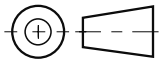

Surface finish	Kit			Kit NBR
R_{max}6.3 ▱ 0.01/100	BK375	4x M5x30 ISO 4762-12.9	7.6 Nm ±15 %	SK-D1FB

D1FV UK.indd RH 17.04.2015

3

The new direct operated proportional DC valve series D1FC (NG06) with digital onboard electronics and position feedback provides high dynamics combined with high flow.

The LVDT is completely integrated into the housing and therefore it does not require an exposed cable connection. Thus an unintended disconnection is impossible.

The digital onboard electronics is situated in a robust metal housing, which allows the usage under rough environmental conditions. The nominal values are factory set. The cable connection to a serial RS232 interface is available as accessory.

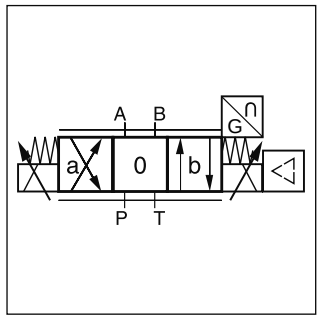

CE

Features

- Progressive flow characteristics for sensitive adjustment
- Low hysteresis
- High dynamics
- High flow capacity
- Compact dimensions

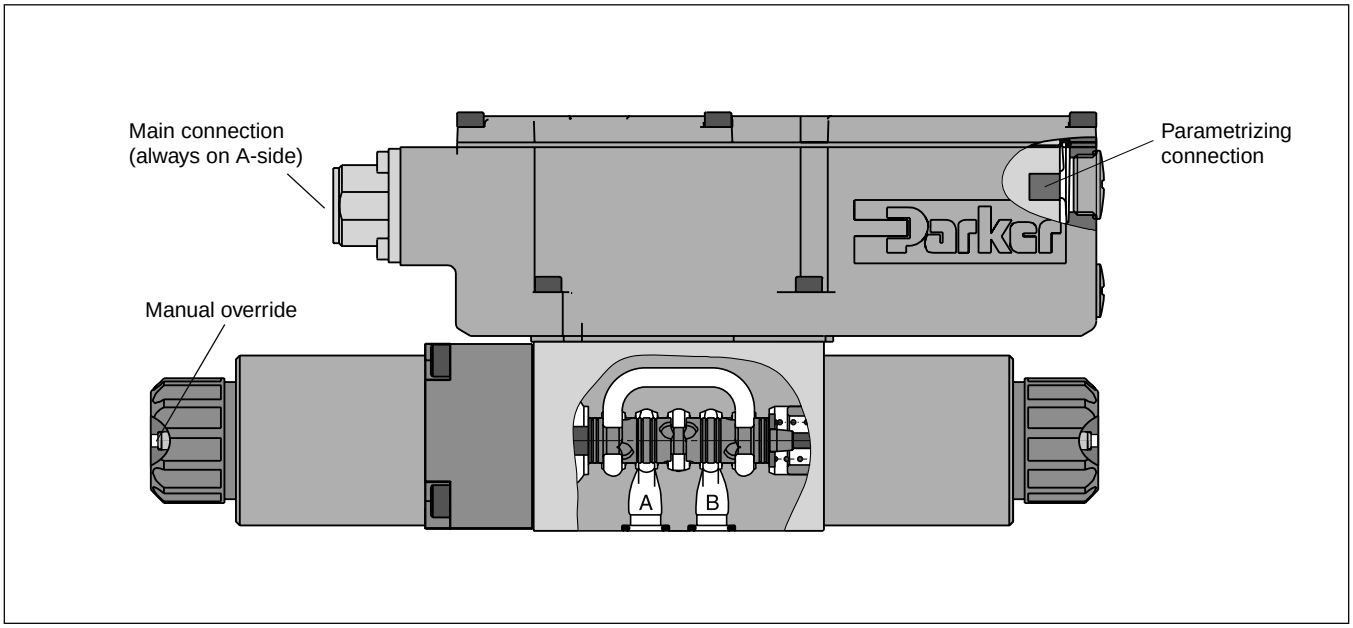

D	1	F	C		C	9				3	
Direct Operated DC Valve	**Size DIN NG06 CETOP 03 NFPA D03**	**Propor-tional control**	**High dynamics**	**Spool type**	**Spool position**	**Drain port Y plugged [1]**	**Seal**	**Command signal**	**Electronic option**	**Spool/ body design**	**Design series** (not required for ordering)

Code	Spool type	Flow [l/min] at Δp 5 bar per metering edge
Overlap		
E01F **E01H** **E01K**	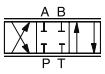	**10** **20** **30**
E02F **E02H** **E02K**		**10** **20** **30**
B31F **B31H** **B31K**	$Q_B = Q_A/2$	**5 / 10** **10 / 20** **15 / 30**
B32F **B32H** **B32K**	$Q_B = Q_A/2$	**5 / 10** **10 / 20** **15 / 30**

Code	Electronic option [2]
0	**6+PE acc. EN175201-804**
5	**11+PE acc. EN175201-804**
7	**6+PE + enable acc. EN175201-804**

Code	Command signal	Function
B	**0...±10 V**	**0...+10 V P -> A**
E	**0...±20 mA**	**0...+20 mA P -> A**
S	**4...20 mA**	**12...20 mA P -> A**

Code	Seal
N	**NBR**
V	**FPM**

Short delivery time for all variations

Parametrizing cable OBE → RS232, item no. 40982923

[1] Plug in port Y needs to be removed at tank pressure >35 bar.
[2] Please order connector separately, see chapter 3 accessories.

D1FC UK.indd RH 17.04.2015

3

General		
Design		Direct operated proportional DC valve with position feedback
Actuation		Proportional solenoid
Size		**NG06 / CETOP 03 / NFPA D03**
Mounting interface		DIN 24340 / ISO 4401 / CETOP RP121 / NFPA
Mounting position		unrestricted
Ambient temperature	[°C]	-20...+60
$MTTF_D$ value [1]	[years]	150
Weight	[kg]	3.4
Vibration resistance	[g]	10 Sinus 5...2000 Hz acc. IEC 68-2-6 30 Random noise 20...2000 Hz acc. IEC 68-2-36 15 Shock acc. IEC 68-2-27
Hydraulic		
Max. operating pressure	[bar]	Ports P, A, B 350, port T max. 35; 210 (external drain); port Y max. 35
Max. pressure drop PABT / PBAT	[bar]	350
Fluid		Hydraulic oil according to DIN 51524 ... 535, other on request
Fluid temperature	[°C]	-20...+60 (NBR: -25...+60)
Viscosity permitted	[cSt] / [mm²/s]	20...400
Viscosity recommended	[cSt] / [mm²/s]	30...80
Filtration		ISO 4406 (1999); 18/16/13
Nominal flow at Δp=5 bar per control edge [2]	[l/min]	10 / 20 / 30
Leakage at 100 bar	[ml/min]	<60
Opening point	[%]	set to 10 command signal (see flow characteristics)
Static / Dynamic		
Step response at 100 % step	[ms]	20
Hysteresis	[%]	<0.1
Temperature drift	[%/K]	<0.01
Electrical characteristics		
Duty ratio	[%]	100
Protection class		IP65 in accordance with EN 60529 (with correctly mounted plug-in connector)
Supply voltage/ripple DC	[V]	18...30, electric shut-off at < 17, ripple < 5 % eff., surge free
Current consumption max.	[A]	2.0
Pre fusing medium lag	[A]	2.5
Command Code B voltage	[V]	+10...0...-10, ripple < 0.01% eff., surge free, 0...+10 V P->A
Code B impedance	[kOhm]	100
Code S current	[mA]	4...12...20, ripple < 0.01 % eff., surge free, 12...20 mA P–>A < 3.6 mA = enable off, > 3.8 mA = enable on (according to NAMUR NE43)
Code S impedance	[Ohm]	200
Code E current	[V]	+20...0...-20, ripple < 0.01 % eff., surge free, 0...+20 mA P–>A
Code E impedance	[Ohm]	200
Differential input max.	[V]	
Code 0/7		30 for terminal D and E against PE (terminal G) 11 for terminal D and E against 0 V (terminal B)
Code 5		30 for terminal 4 and 5 against PE (terminal PE) 11 for terminal 4 and 5 against 0 V (terminal 2)
Adjustment ranges Min	[%]	0...50
Adjustment ranges Max	[%]	50...100
Adjustment ranges Ramp	[s]	0...32.5
Parametrizing interface		RS232C, parametrizing connection 5pole
Enable signal (code 5/7)	[V]	5...30
Diagnostic signal	[V]	+10...0...-10 / +12.5 error detection, rated max. 5 mA
EMC		EN 61000-6-2, EN 61000-6-4
Electrical connection Code 0/7		6 + PE acc. to EN 175201-804
Electrical connection Code 5		11 + PE acc. to EN 175201-804
Wiring min.	[mm²]	7 x 1.0 (AWG 16) overall braid shield
Wiring length max.	[m]	50

[1] If valves with onboard electronics are used in safety-related parts of control systems, in case the safety function is requested, the valve electronics voltage supply is to be switched off by a suitable switching element with sufficient reliability.

[2] Flow rate for different Δp per control edge: $Q_x = Q_{Nom.} \cdot \sqrt{\frac{\Delta p_x}{\Delta p_{Nom.}}}$

Flow characteristics
(set to opening point 10 %) at Δp = 5 bar per metering edge
Spool type E01/02

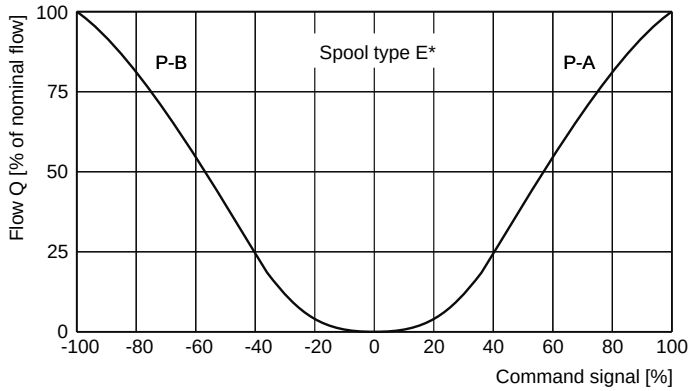

Spool type B31/32

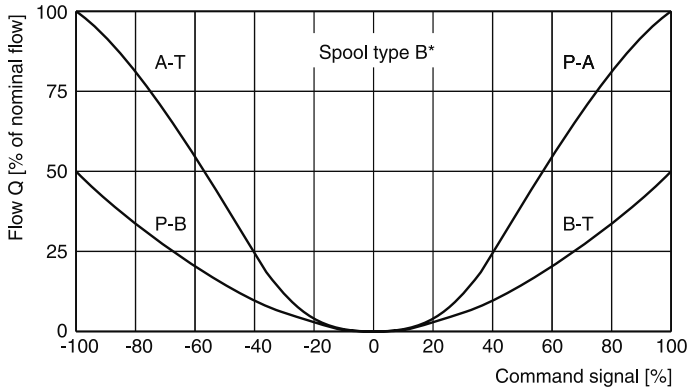

Functional limits
25 %, 50 %, 75 % and 100 % command signal (symmetric flow).
At asymmetric flow a reduced flow limit has to be considered.
Spool type E01K

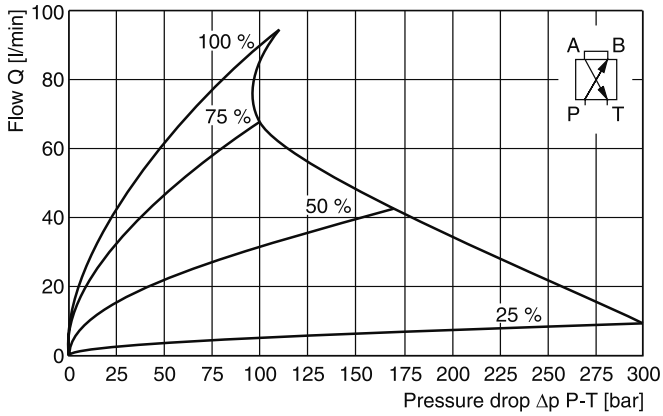

All characteristic curves measured with HLP46 at 50 °C.

3

Code 0
6 + PE acc. to EN 175201-804

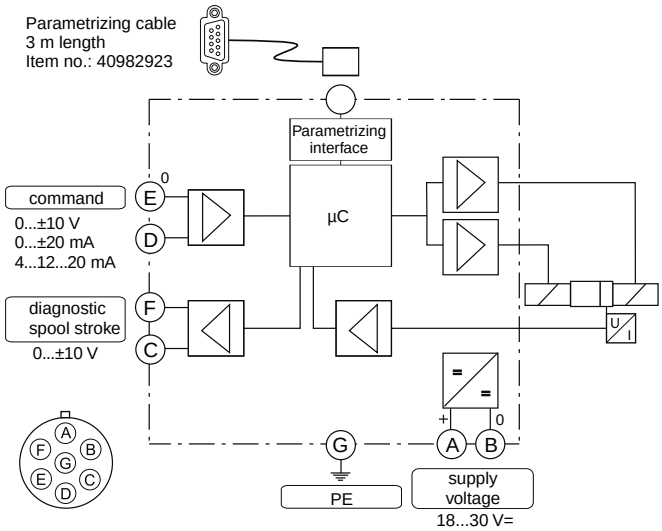

Code 5
11 + PE acc. to EN 175201-804

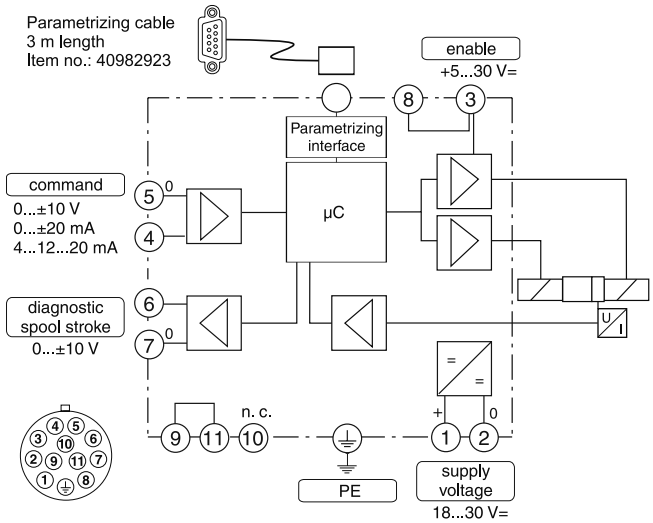

Code 7
6 + PE acc. to EN 175201-804 + enable

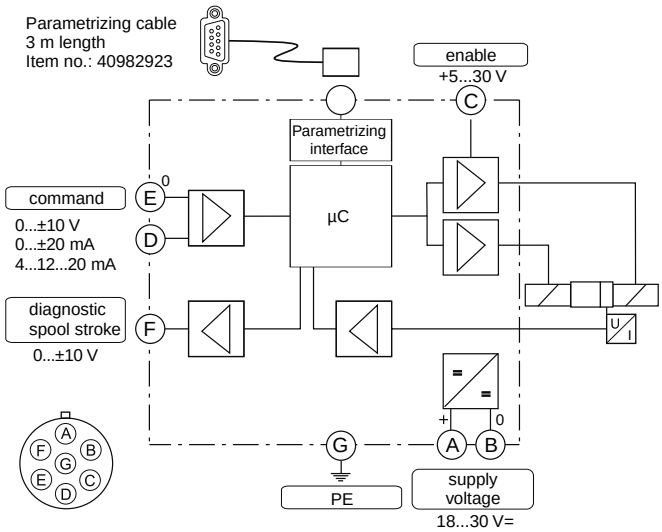

ProPxD interface program

The ProPxD software permits comfortable parameter setting for the module electronics. Via the clearly arranged entry mask the parameters can be noticed and modified. Storage of complete parameter sets is possible as well as printout or record as a text file for further documentation. Stored parameter sets may be loaded anytime and transmitted to other valves. Inside the electronics a non-volatile memory stores the data with the option for recalling or modification.

The PC software can be downloaded free of charge at www.parker.com/euro_hcd – see page “Support" or directly at www.parker.com/propxd.

Features

- Comfortable editing of all parameters
- Depiction and documentation of parameter sets
- Storage and loading of optimized parameter adjustments
- Executable with all actual Windows® operating systems from Windows® XP upwards
- Plain communication between PC and electronics via serial interface RS232C

The parametrizing cable may be ordered under item no. 40982923.

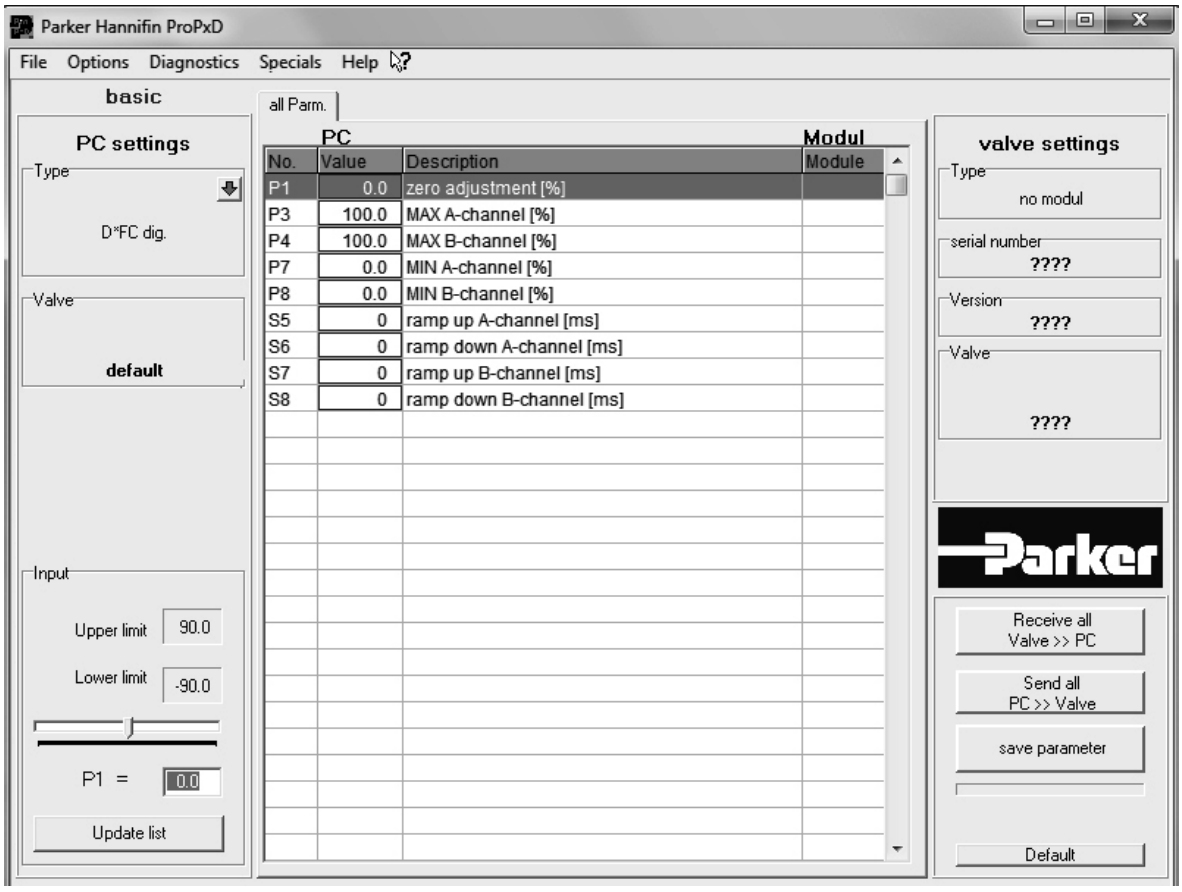

3

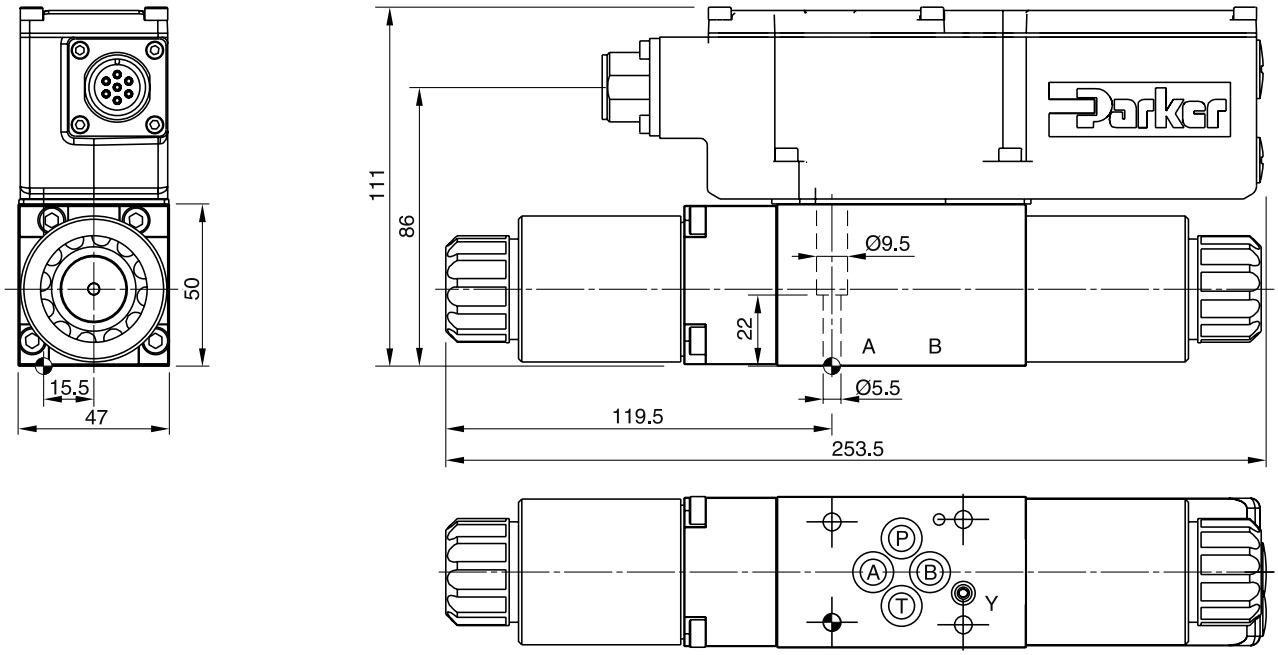

Port Y plugged

Surface finish	Kit			Kit NBR
R_{max}6.3 0.01/100	BK375	4x M5x30 ISO 4762-12.9	7.6 Nm ±15 %	NBR: SK-D1FC FPM: SK-D1FC-V

The new direct operated proportional DC valve series D3FC (NG10) with digital onboard electronics and position feedback provides high dynamics combined with high flow.

The LVDT is completely integrated into the housing and therefore it does not require an exposed cable connection. Thus an unintended disconnection is impossible.

The digital onboard electronics is situated in a robust metal housing, which allows the usage under rough environmental conditions. The nominal values are factory set. The cable connection to a serial RS232 interface is available as accessory.

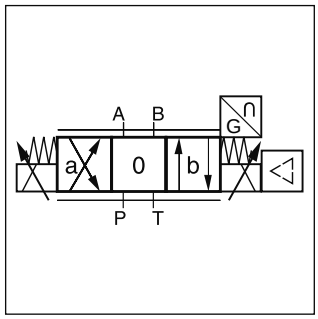

CE

Features

- Progressive flow characteristics for sensitive adjustment
- Low hysteresis
- High dynamics
- High flow capacity
- Compact dimensions

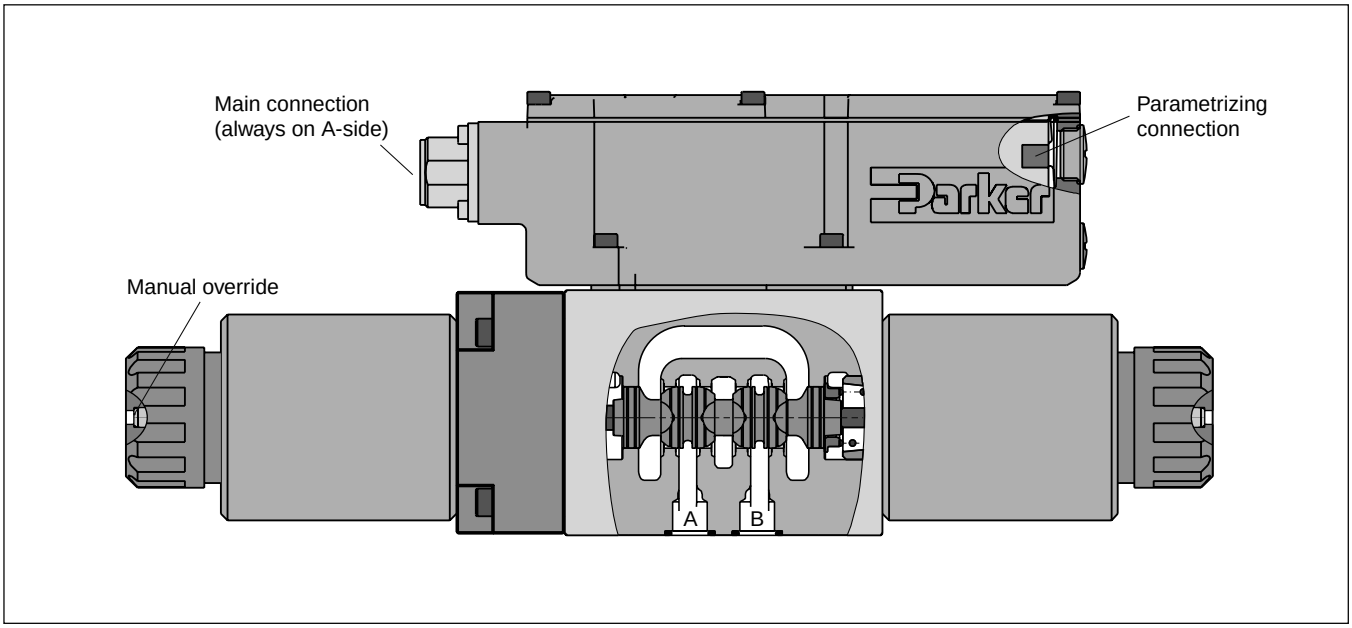

3

D	3	F	C		C	9				3	
Direct Operated DC Valve	**Size DIN NG10 CETOP 05 NFPA D05**	**Propor-tional control**	**High dynamics**	**Spool type**	**Spool position**	**Drain port Y plugged [1]**	**Seal**	**Command signal**	**Electronic option**	**Spool/ body design**	**Design series** (not required for ordering)

Code	Spool type	Flow [l/min] at Δp 5 bar per metering edge
Overlap		
E01M **E01S** **E01U**	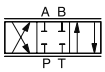	**35** **55** **75**
E02M **E02S** **E02U**		**35** **55** **75**
B31M **B31S** **B31U**	$Q_B = Q_A/2$ 	**17 / 35** **27 / 55** **37 / 75**
B32M **B32S** **B32U**	$Q_B = Q_A/2$ 	**17 / 35** **27 / 55** **37 / 75**

Code	Electronic option [2]
0	**6+PE acc. EN175201-804**
5	**11+PE acc. EN175201-804**
7	**6+PE + enable acc. EN175201-804**

Code	Command signal	Function
B	**0...±10 V**	**0...+10 V P -> A**
E	**0...±20 mA**	**0...+20 mA P -> A**
S	**4...20 mA**	**12...20 mA P -> A**

Code	Seal
N	**NBR**
V	**FPM**

Short delivery time for all variations

Parametrizing cable OBE → RS232, item no. 40982923

[1] Plug in port Y needs to be removed at tank pressure >35 bar.
[2] Please order connector separately, see chapter 3 accessories.

D3FC UK.indd RH 17.04.2015

General		
Design		Direct operated proportional DC valve with position feedback
Actuation		Proportional solenoid
Size		**NG10 / CETOP 05 / NFPA D05**
Mounting interface		DIN 24340 / ISO 4401 / CETOP RP121 / NFPA
Mounting position		unrestricted
Ambient temperature	[°C]	-20...+60
$MTTF_D$ value [1]	[years]	150
Weight	[kg]	7.7
Vibration resistance	[g]	10 Sinus 5...2000 Hz acc. IEC 68-2-6 30 Random noise 20...2000 Hz acc. IEC 68-2-36 15 Shock acc. IEC 68-2-27
Hydraulic		
Max. operating pressure	[bar]	Ports P, A, B 350, port T max. 35; 210 (external drain); port Y max. 35
Max. pressure drop PABT / PBAT	[bar]	350
Fluid		Hydraulic oil according to DIN 51524 ... 535, other on request
Fluid temperature	[°C]	-20...+60 (NBR: -25...+60)
Viscosity permitted	[cSt] / [mm²/s]	20...400
Viscosity recommended	[cSt] / [mm²/s]	30...80
Filtration		ISO 4406 (1999); 18/16/13
Nominal flow at Δp=5 bar per control edge [2]	[l/min]	35 / 55 / 75
Leakage at 100 bar	[ml/min]	<100
Opening point	[%]	set to 10 command signal (see flow characteristics)
Static / Dynamic		
Step response at 100 % step	[ms]	40
Hysteresis	[%]	<0.1
Temperature drift	[%/K]	<0.01
Electrical characteristics		
Duty ratio	[%]	100
Protection class		IP65 in accordance with EN 60529 (with correctly mounted plug-in connector)
Supply voltage/ripple DC	[V]	18...30, electric shut-off at < 17, ripple < 5 % eff., surge free
Current consumption max.	[A]	3.5
Pre fusing medium lag	[A]	4.0
Command Code B voltage	[V]	+10...0...-10, ripple < 0.01% eff., surge free, 0...+10 V P->A
Code B impedance	[kOhm]	100
Code S current	[mA]	4...12...20, ripple < 0.01 % eff., surge free, 12...20 mA P–>A < 3.6 mA = enable off, > 3.8 mA = enable on (according to NAMUR NE43)
Code S impedance	[Ohm]	200
Code E current	[V]	+20...0...-20, ripple < 0.01 % eff., surge free, 0...+20 mA P–>A
Code E impedance	[Ohm]	200
Differential input max.	[V]	
Code 0/7		30 for terminal D and E against PE (terminal G) 11 for terminal D and E against 0V (terminal B)
Code 5		30 for terminal 4 and 5 against PE (terminal PE) 11 for terminal 4 and 5 against 0 V (terminal 2)
Adjustment ranges Min	[%]	0...50
Adjustment ranges Max	[%]	50...100
Adjustment ranges Ramp	[s]	0...32.5
Parametrizing interface		RS232C, parametrizing connection 5pole
Enable signal (code 5/7)	[V]	5...30
Diagnostic signal	[V]	+10...0...-10 / +12.5 error detection, rated max. 5 mA
EMC		EN 61000-6-2, EN 61000-6-4
Electrical connection Code 0/7		6 + PE acc. to EN 175201-804
Electrical connection Code 5		11 + PE acc. to EN 175201-804
Wiring min.	[mm²]	7 x 1.0 (AWG 16) overall braid shield
Wiring length max.	[m]	50

[1] If valves with onboard electronics are used in safety-related parts of control systems, in case the safety function is requested, the valve electronics voltage supply is to be switched off by a suitable switching element with sufficient reliability.

[2] Flow rate for different Δp per control edge: $Q_x = Q_{Nom.} \cdot \sqrt{\frac{\Delta p_x}{\Delta p_{Nom.}}}$

3

Flow characteristics

(Electrically set to opening point 10 %) at Δp = 5 bar per metering edge

Spool type E01/02

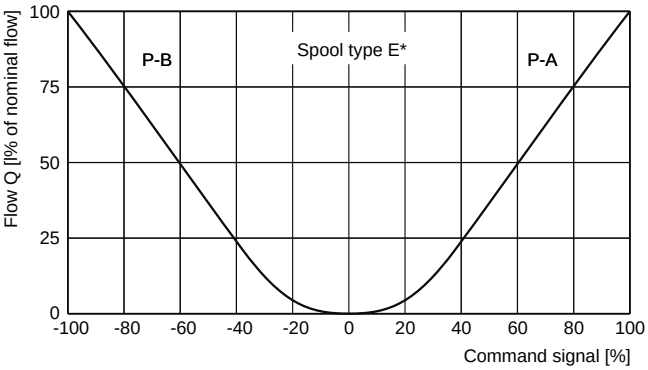

Spool type B31/32

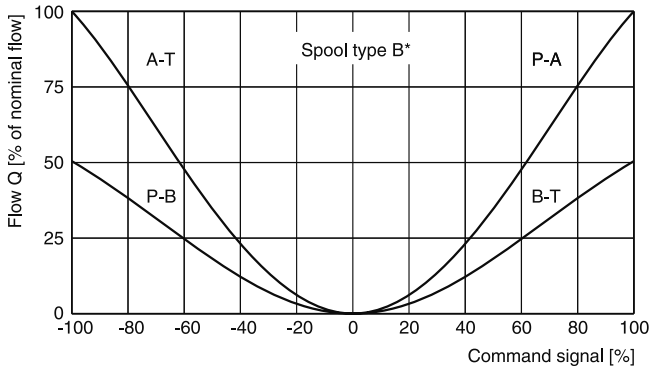

Functional limits

25 %, 50 %, 75 % and 100 % command signal (symmetric flow).
At asymmetric flow a reduced flow limit has to be considered.

Spool type E01M

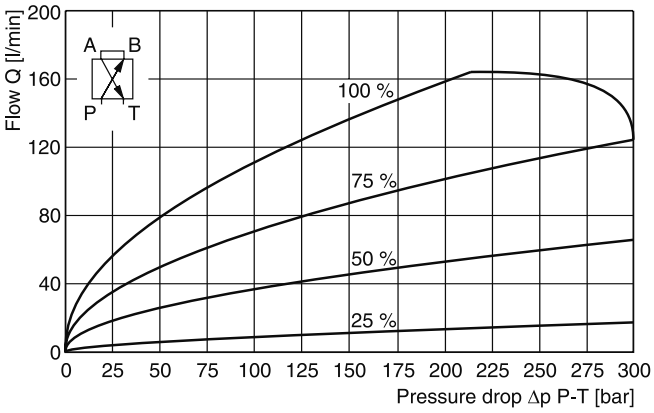

Spool type E01U

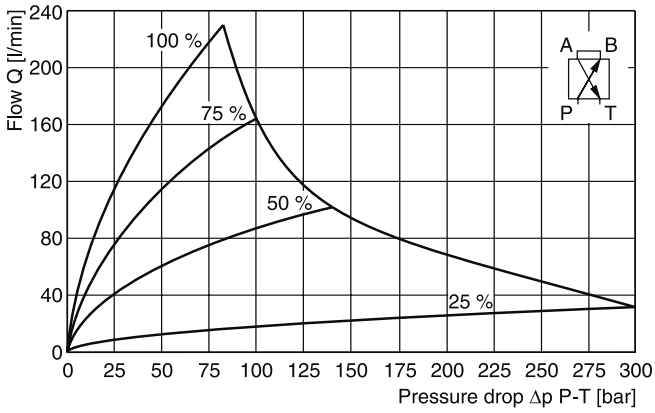

All characteristic curves measured with HLP46 at 50 °C.

Code 0
6 + PE acc. to EN 175201-804

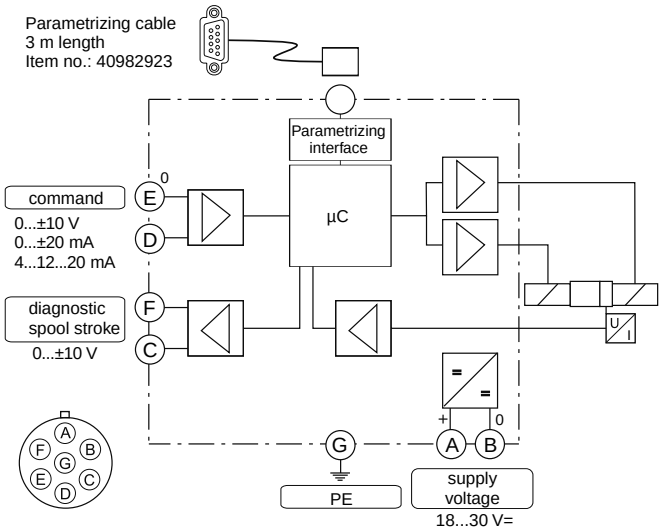

Code 5
11 + PE acc. to EN 175201-804

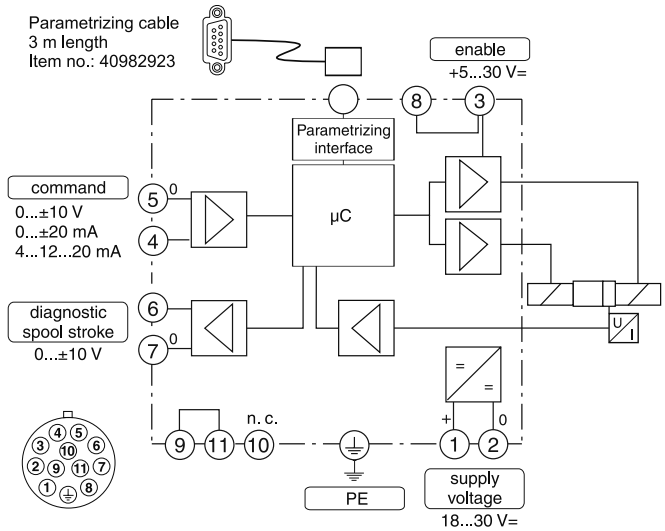

Code 7
6 + PE acc. to EN 175201-804 + enable

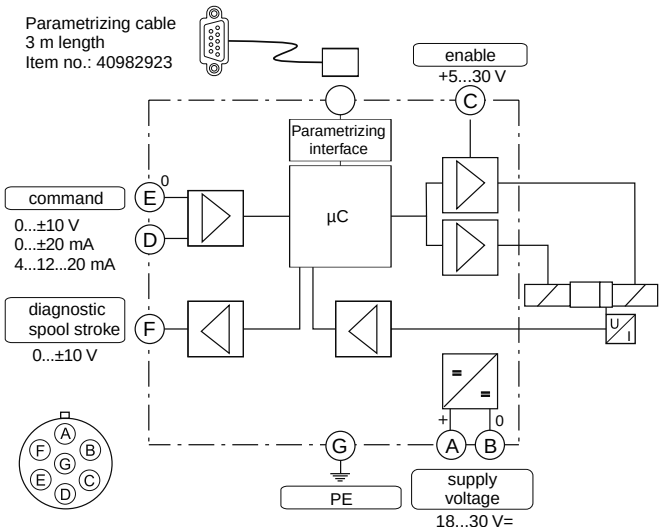

3

ProPxD interface program

The ProPxD software permits comfortable parameter setting for the module electronics. Via the clearly arranged entry mask the parameters can be noticed and modified. Storage of complete parameter sets is possible as well as printout or record as a text file for further documentation. Stored parameter sets may be loaded anytime and transmitted to other valves. Inside the electronics a non-volatile memory stores the data with the option for recalling or modification.

The PC software can be downloaded free of charge at www.parker.com/euro_hcd – see page “Support" or directly at www.parker.com/propxd.

Features

- Comfortable editing of all parameters
- Depiction and documentation of parameter sets
- Storage and loading of optimized parameter adjustments
- Executable with all actual Windows® operating systems from Windows® XP upwards
- Plain communication between PC and electronics via serial interface RS232C

The parametrizing cable may be ordered under item no. 40982923.

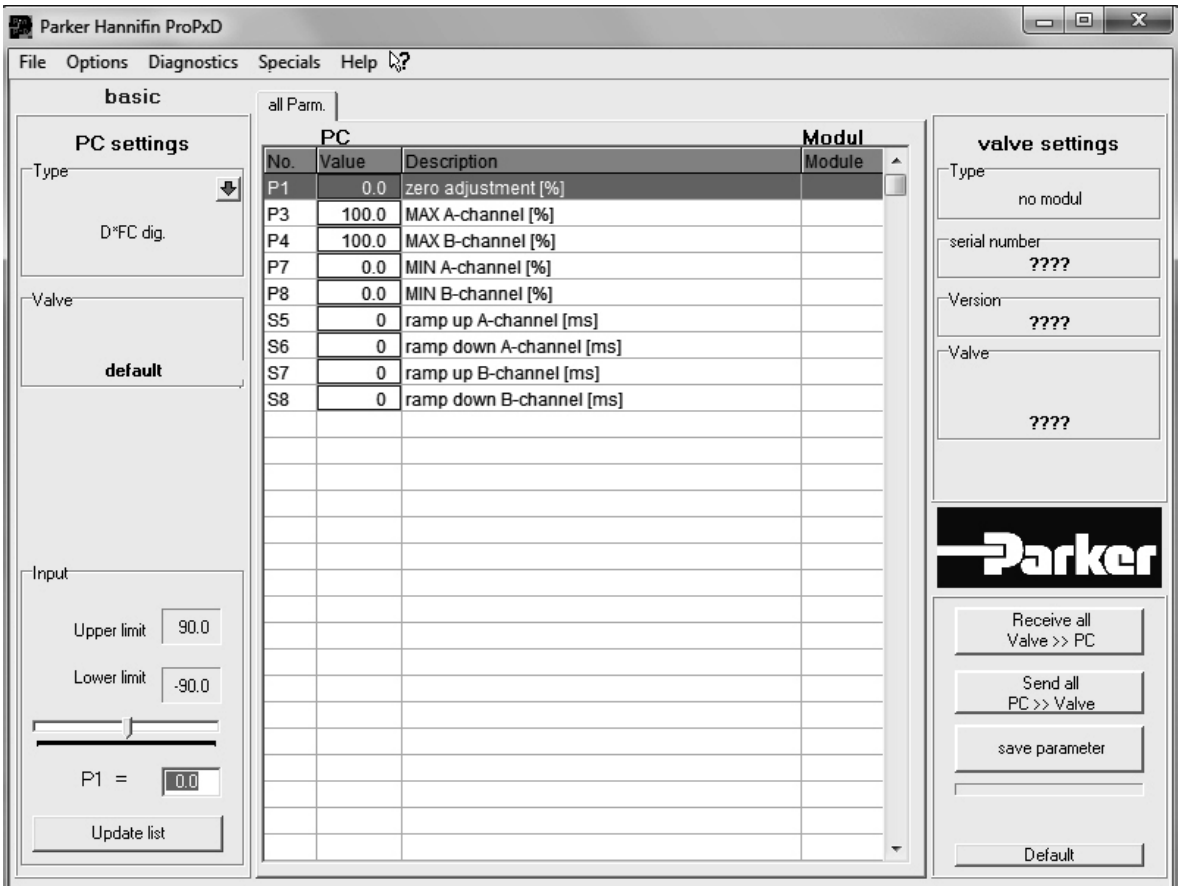

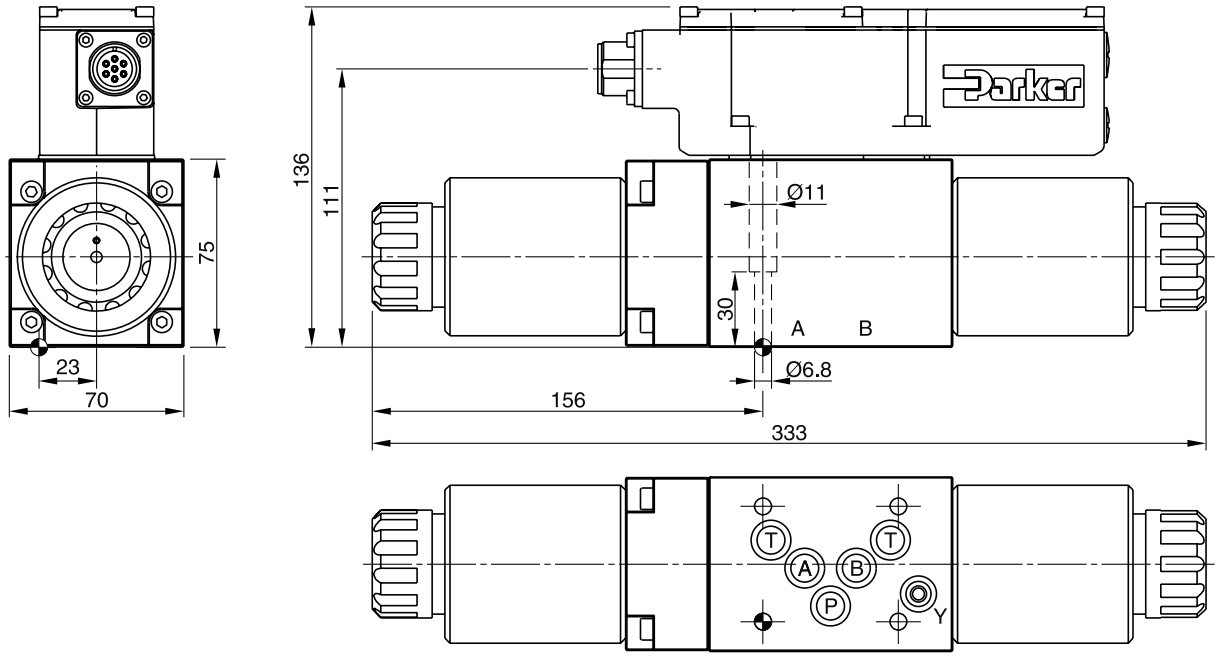

Port Y plugged

Surface finish	Kit			Kit NBR
R_{max}6.3 ▱ 0.01/100	BK385	4x M6x40 ISO 4762-12.9	13.2 Nm ±15 %	NBR: SK-D3FC FPM: SK-D3FC-V

3

The pilot operated proportional directional valves D*1FC with position feedback are available in 4 sizes:

D31FC - NG10 (CETOP 05)
D41FC - NG16 (CETOP 07)
D91FC - NG25 (CETOP 08)
D111FC - NG32 (CETOP 10)

The digital onboard electronics is situated in a robust metal housing, which allows the usage under rough environmental conditions.

The nominal values are factory set. The cable connection to a serial RS232 interface is available as accessory.

The innovative integrated regenerative function into the A-line (optional) allows energy saving circuits for differential cylinders. The hybrid version can be switched between regenerative mode and standard mode at any time.

D41FC

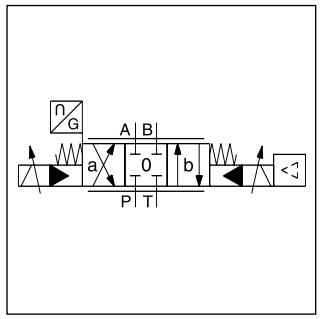

Standard D*1FC

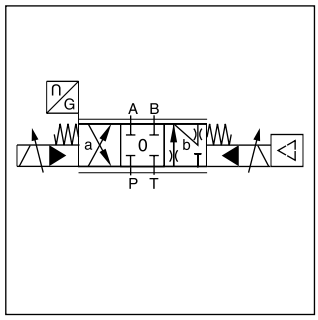

A-regeneration D*1FCR

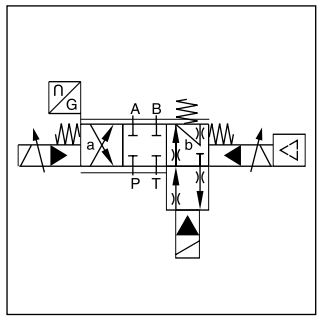

Hybrid D*1FCZ

Features

- Progressive flow characteristics for sensitive adjustment
- Low hysteresis
- High dynamics
- High flow capacity
- Centre position monitoring optional
- Energy saving A-regeneration optional
- Switchable hybrid version optional

Further literature about the opportunities of energy savings and more functional details of the integrated regeneration is available on request.

D41FC

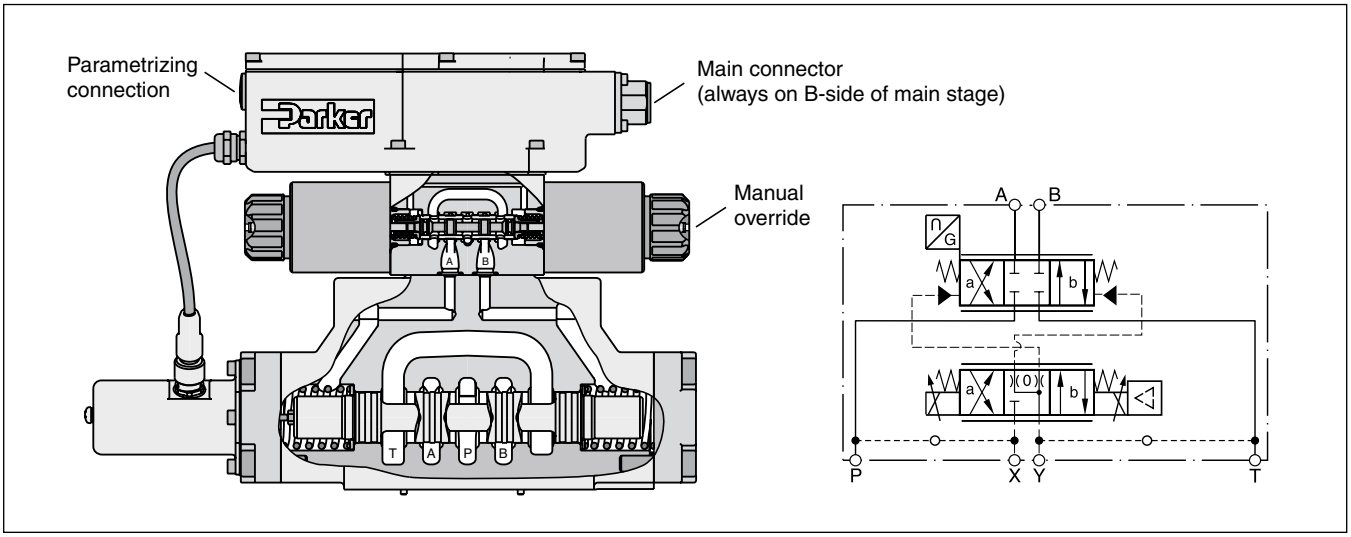

D*1FCR and D*1FCZ

Regenerative valve D*1FCR

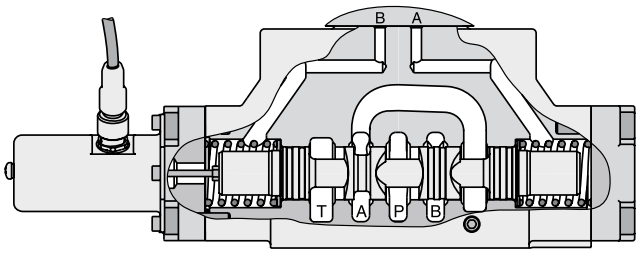

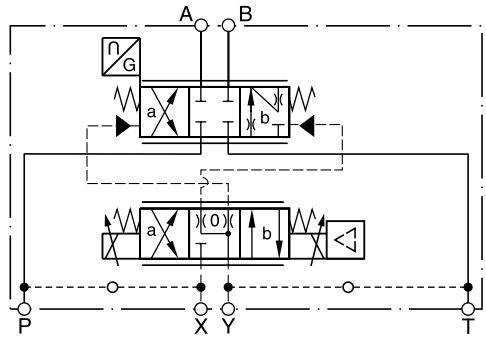

Hybrid valve D*1FCZ

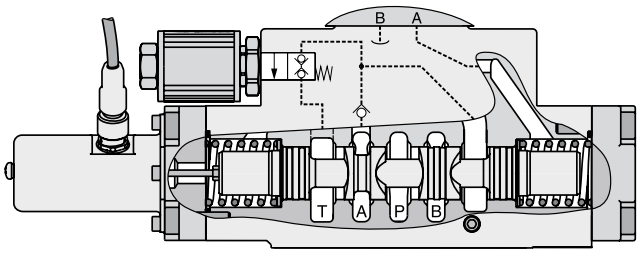

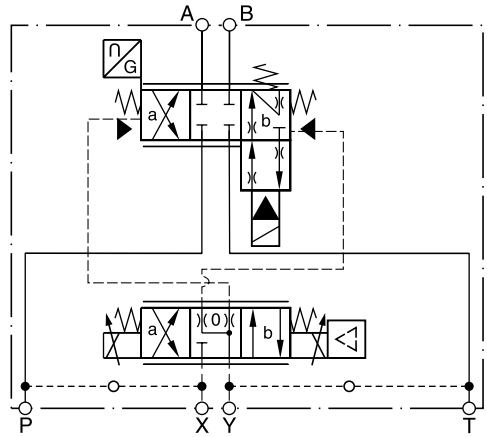

D*1FCR (regenerative valve) Cylinder extending (high speed)

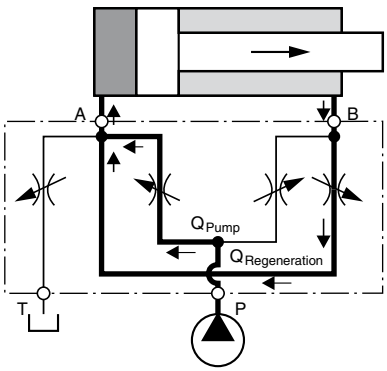

D*1FCZ (hybrid valve) Cylinder extending regenerative mode (high speed)

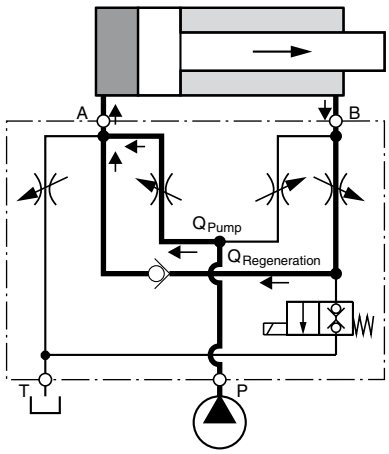

Cylinder extending standard mode (high force)

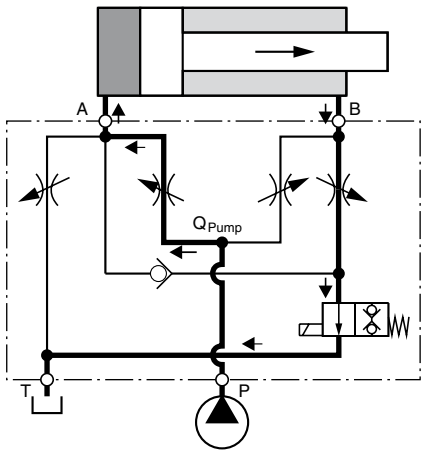

Flow rate in % of nominal flow

Size	Spool	Port					
		A-T	P-A	P-B	B-A (R-valve)	B-A (hybrid)	B-T (hybrid)
D41FCR/Z	31/32	100 %	50 %	100 %	50 %	45 %	20 %
D91FCR/Z	31/32	100 %	50 %	100 %	50 %	50 %	25 %
D111FCR/Z	31/32	100 %	50 %	100 %	50 %	50 %	20 %

3

D		1	F	C			C						
Directional control valve	Size	NG06 pilot	Proportional control	Integrated electronics with position feedback	Function	Flow	Spool position on power down	Pilot connection	Seal	Command signal	Electronic option	Valve option	Design series (not required for ordering)

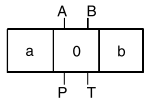

Code	Nominal size
3	NG10 / CETOP 05
4	NG16 / CETOP 07
9 [1]	NG25 / CETOP 08
11	NG32 / CETOP 10

Standard		Regenerative function [2]		Hybrid function [2] [3]	
Code	Spool type	Code	Spool type	Code	Spool type
Overlap		Overlap		Overlap	
E01	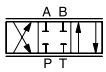				
E02	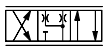				
B31	$Q_B = Q_A/2$ 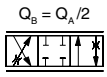	R31	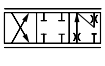	Z31	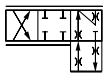
B32	$Q_B = Q_A/2$ 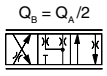	R32		Z32	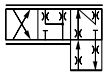

Code	Flow [l/min] at Δp = 5 bar per metering edge			
	D31	D41	D91	D111
D	90	—	—	—
E	120	—	—	—
F	—	200	—	—
H	—	—	450	—
L	—	—	—	1000

Code	Valve option
0	Standard for spool type B, E R
8 [6)7)8)]	Monitor switch
L [5)]	Hybrid valve 24V normally closed for spool type Z

Code	Electronic option [4)]
0	6+PE acc. EN175201-804
5	11+PE acc. EN175201-804
7	6+PE + enable acc. EN175201-804

Code	Command signal	Function
B	0...±10 V	0...+10 V P -> B
E	0...±20 mA	0...+20 mA P -> B
K	0...±10 V	0...+10 V P -> A
S	4...20 mA	12...20 mA P -> A

Code	Seal
N	NBR
V	FPM

Code	Inlet	Drain
1	Internal	External
2	External	External
4	Internal	Internal
5	External	Internal

Short delivery time for all variations

Parametrizing cable OBE → RS232, item no. 40982923

[1] With enlarged connections Ø 32 mm.
[2] For regenerative and hybrid function at D31FC (NG10) please refer solutions with sandwich- and adaptor plates "A10-1664 / A10-1665L / H10-1662 / H10-1666L" in chapter 12.

D31FC spool type: R31 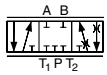 R32 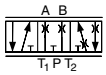

[3] Not for D31FC.
[4] Please order plugs separately, see accessories .
[5] See page "regenerative and hybrid function" (not for D31FC).
[6] Not for D111FCZ*.
[7] Monitor switch for hybrid valves: code 8 includes options of code L (24 V normally closed).
[8] Please order female connector M12x1 separately (see accessories, female connector M12x1 (order no.: 5004109).

D_1FC UK.indd RH 09.10.2015

General					
Design		Pilot operated DC valve			
Actuation		Proportional solenoid			
Size		**NG10 (CETOP 05)**	**NG16 (CETOP 07)**	**NG25 (CETOP 08)**	**NG32 (CETOP 10)**
		D31	**D41**	**D91**	**D111**
Mounting interface		DIN 24340 / ISO 4401 / CETOP RP121 / NFPA			
Mounting position		unrestricted			
Ambient temperature	[°C]	-20...+60			
$MTTF_D$ value [1]	[years]	75			
Weight	[kg]	9.0	12.5	21.0	68.5
Vibration resistance	[g]	10 Sinus 5...2000 Hz acc. IEC 68-2-6 30 Random noise 20...2000 Hz acc. IEC 68-2-36 15 Shock acc. IEC 68-2-27			
Hydraulic					
Max. operating pressure	[bar] [bar]	Pilot drain internal: P, A, B, X 350; T, Y 210 Pilot drain external: P, A, B, T, X 350; Y 210			
Fluid		Hydraulic oil according to DIN 51524...535, other on request			
Fluid temperature	[°C]	-20...+60 (NBR: -25...+60)			
Viscosity permitted	[cSt] / [mm²/s]	20...400			
recommended	[cSt] / [mm²/s]	30...80			
Filtration		ISO 4406 (1999); 18/16/13			
Nominal flow at Δp=5 bar per control edge [2]	[l/min]	90 / 120	200	450	1000
Leakage at 100 bar, main stage	[ml/min]	200	200	600	1000
pilot stage	[ml/min]	<100			
Opening point	[%]	set to 10 command signal (see flow characteristics)			
Pilot supply pressure	[bar]	20 - 350			
Pilot flow, step response	[l/min]	2.9	4.1	6.7	15
Static / Dynamic					
Step response at 100 % step [3]	[ms]	35	37	66	120
Hysteresis	[%]	≤ 0.1			
Temperature drift	[%/K]	< 0.005			
Sensitivity	[%]	≤ 0.05			

[1] If valves with onboard electronics are used in safety-related parts of control systems, in case the safety function is requested, the valve electronics voltage supply is to be switched off by a suitable switching element with sufficient reliability.

[2] Flow rate for different Δp per control edge: $Q_x = Q_{Nom.} \cdot \sqrt{\frac{\Delta p_x}{\Delta p_{Nom.}}}$

[3] Measured with load (210 bar pressure drop / two control edges)

D_1FC UK.indd RH 09.10.2015

3

Electrical characteristics			
Duty ratio		[%]	100
Protection class			IP65 in accordance with EN 60529 (with correctly mounted plug-in connector)
Supply voltage/ripple DC		[V]	18...30, electric shut-off at < 17, ripple < 5 % eff., surge free
Current consumption max.		[A]	2.0
Pre fusing medium lag		[A]	2.5
Command signal			
Code K (B)	Voltage	[V]	10...0...-10, ripple <0.01 % eff., surge free, 0...+10 V P—>A (P—>B)
	Impedance	[kOhm]	100
Code E	Current	[mA]	20...0...-20, ripple <0.01 % eff., surge free, 0...+20 mA P—>B
	Impedance	[Ohm]	<250
Code S	Current	[mA]	4...12...20, ripple <0.01 % eff., surge free, 12...20 mA P—>A < 3.6 mA = enable off, > 3.8 mA = enable on acc. to NAMUR NE43
	Impedance	[Ohm]	<250
Differential input max.		[V]	
Code 0/7			30 for terminal D and E against PE (terminal G) 11 for terminal D and E against 0 V (terminal B)
Code 5			30 for terminal 4 and 5 against PE (terminal PE) 11 for terminal 4 and 5 against 0 V (terminal 2)
Adjustment ranges	Min	[%]	0...50
	Max	[%]	50...100
	Ramp	[s]	0...32.5
Interface			RS 232, parametrizing connection 5pole
Enable signal (code 5/7)		[V]	5...30
Diagnostic signal		[V]	+10...0...-10 / +12.5 error detection, rated max. 5 mA
EMC			EN 61000-6-2, EN 61000-6-4
Electrical connection	Code 0/7		6 + PE acc. to EN 175201-804
	Code 5		11 + PE acc. to EN 175201-804
Wiring min.		[mm²]	7 x 1.0 (AWG16) overall braid shield
Wiring length max.		[m]	50
Electrical characteristics hybrid option			
Duty ratio		[%]	100
Protection class			IP 65 in accordance with EN 60529 (with correctly mounted plug-in connector)
Supply voltage		[V]	24
Tolerance supply voltage		[%]	±10
Current consumption		[A]	1.21
Power consumption		[W]	29
Solenoid connection			Connector as per EN 175301-803
Wiring min.		[mm²]	3 x 1.5 recommended
Wiring length max.		[m]	50 recommended

With electrical connections the protective conductor (PE ⏚) must be connected according to the relevant regulations.

D*1FC B/E Flow characteristics

(set to opening point 10 %)
at Δp = 5 bar per metering edge

D31FC

Spool code E01, E02, B31, B32

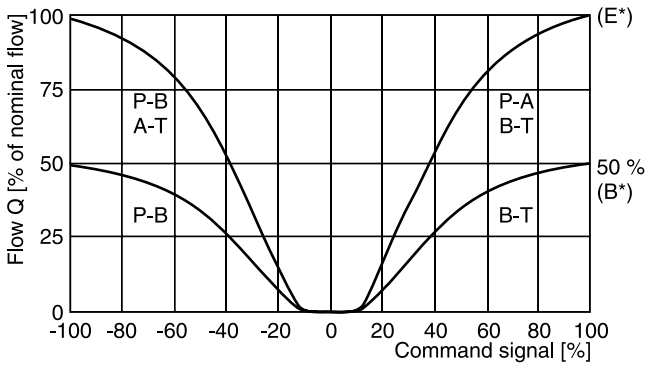

D41FC

Spool code E01, E02, B31, B32

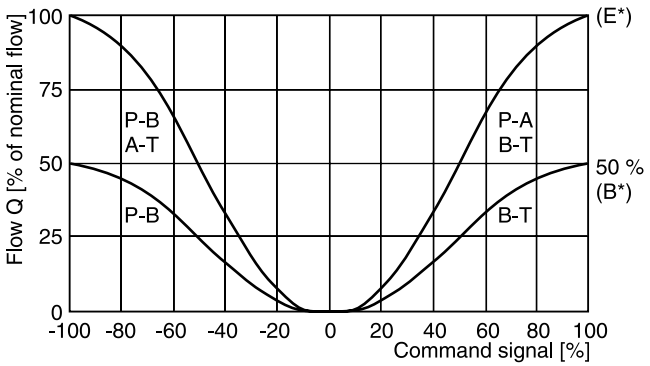

All characteristic curves measured with HLP46 at 50 °C.

Flow characteristics
(set to opening point 10 %)
at Δp = 5 bar per metering edge

D91FC
Spool type E01, E02, B31, B32

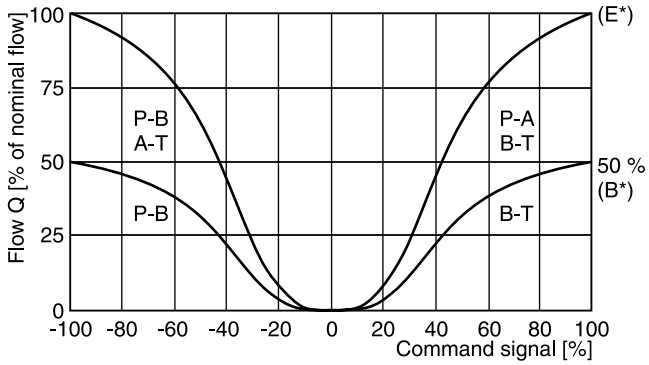

D111FC
Spool type E01, E02, B31, B32

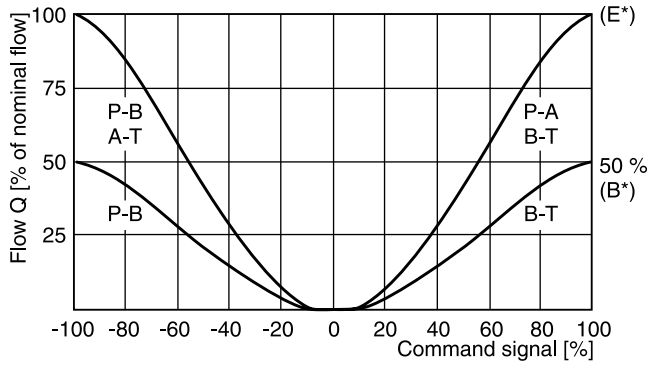

Flow characteristics D*1FCR/Z
(set to opening point 10 %)
at Δp = 5 bar per metering edge

D31FC
Spool type R31, R32

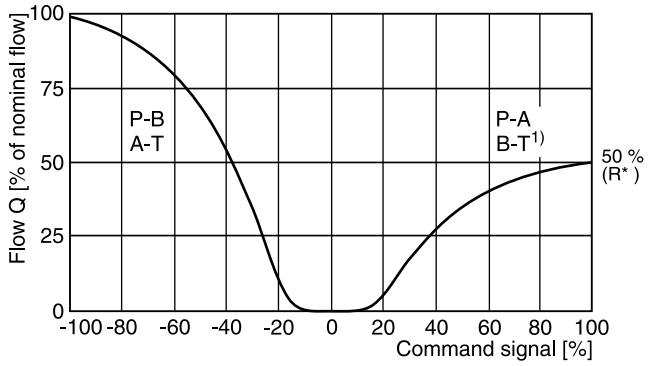

D41FC
Spool type R31, R32, Z31, Z32

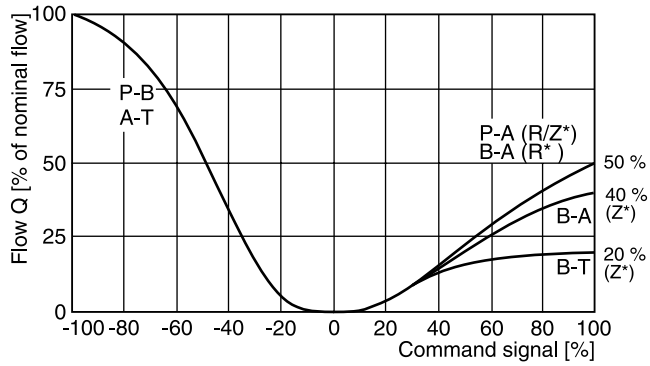

D91FC
Spool type R31, R32, Z31, Z32

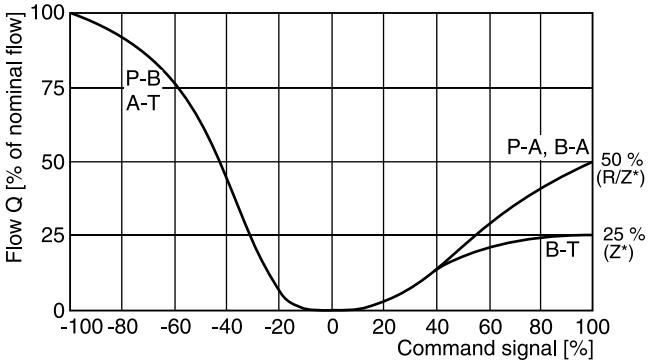

D111FC
spool type R/Z* on request

All characteristic curves measured with HLP46 at 50 °C.

[1] With 2 tank ports.

D_1FC UK.indd RH 09.10.2015

3

Electrical characteristics of position control M12x1 as per IEC 61076-2-101

Supply voltage	[VDC]	24
Tolernace supply voltage	[%]	±20
Ripple supply voltage	[%]	≤10
Polarity protection	[V]	300
Current consumption without load	[mA]	≤20
Switching hysteresis	[mm]	<0.06
Max. output current per channel, ohmic	[mA]	250
Ambient temperature	[°C]	-20 … +60
Protection		IP65 acc. EN 60529
CE conform		EN 61000-4-2 / EN 61000-4-4 / EN 61000-4-6 [1)] / ENV 50140 / ENV 50204
Min. distance to next AC solenoid	[m]	0.1
Interface		M12x1 to IEC 61076-2-101

M12x1 connector pin assignment

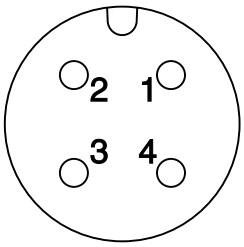

1 + US 19.2...28.8 V
2 Output B (normally closed)
3 0 V
4 Output A (normally closed)

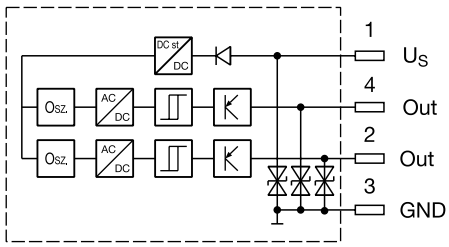

Outputs: Open collector

Signal	Output A (pin 4)	Output B (pin 2)
neutral	closed	closed
	open	closed
	closed	open

The neutral position is monitored. The signal changes after less than 10 % of the spool stroke.

Please order female connector M12x1 separately (see accessories, female connector M12x1 (order no.: 5004109).

Wiring according EN 175201-804

Code 0, 6+PE

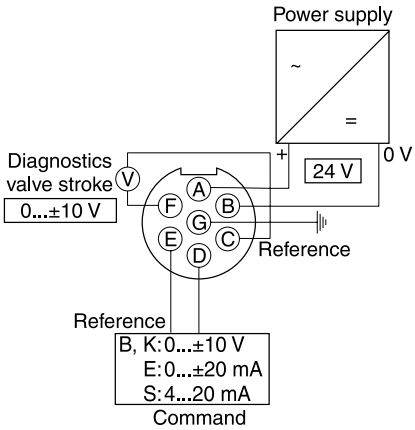

Code 5, 11+PE

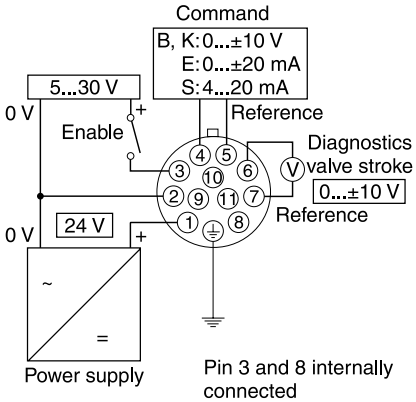

Pin 3 and 8 internally connected

Pin 9 and 11 internally connected

Pin 10 not connected

Code 7, 6+PE + enable

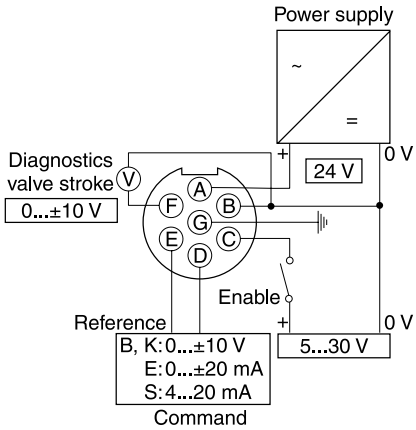

[1)] Only guaranted with screened cable and female connector

ProPxD interface program

The ProPxD software allows quick and easy setting of the digital valve electronics. Individual parameters as well as complete settings can be viewed, changed and saved via the comfortable user interface. Parameter sets saved in the non-volatile memory can be loaded to other valves of the same type or printed out for documentation purposes.

The PC software can be downloaded free of charge at www.parker.com/euro_hcd – see page “Support" or directly at www.parker.com/propxd.

Features

- Comfortable editing of valve parameters
- Saving and loading of customized parameter sets
- Executable with all Windows® operating systems from Windows® XP upwards
- Simple communication between PC and valve electronics via serial interface RS232C

The valve electronics cannot be connected to a PC with a standard USB cable – this can result in damages of PC and/or valve electronics.

The parametrizing cable may be ordered under item no. 40982923.

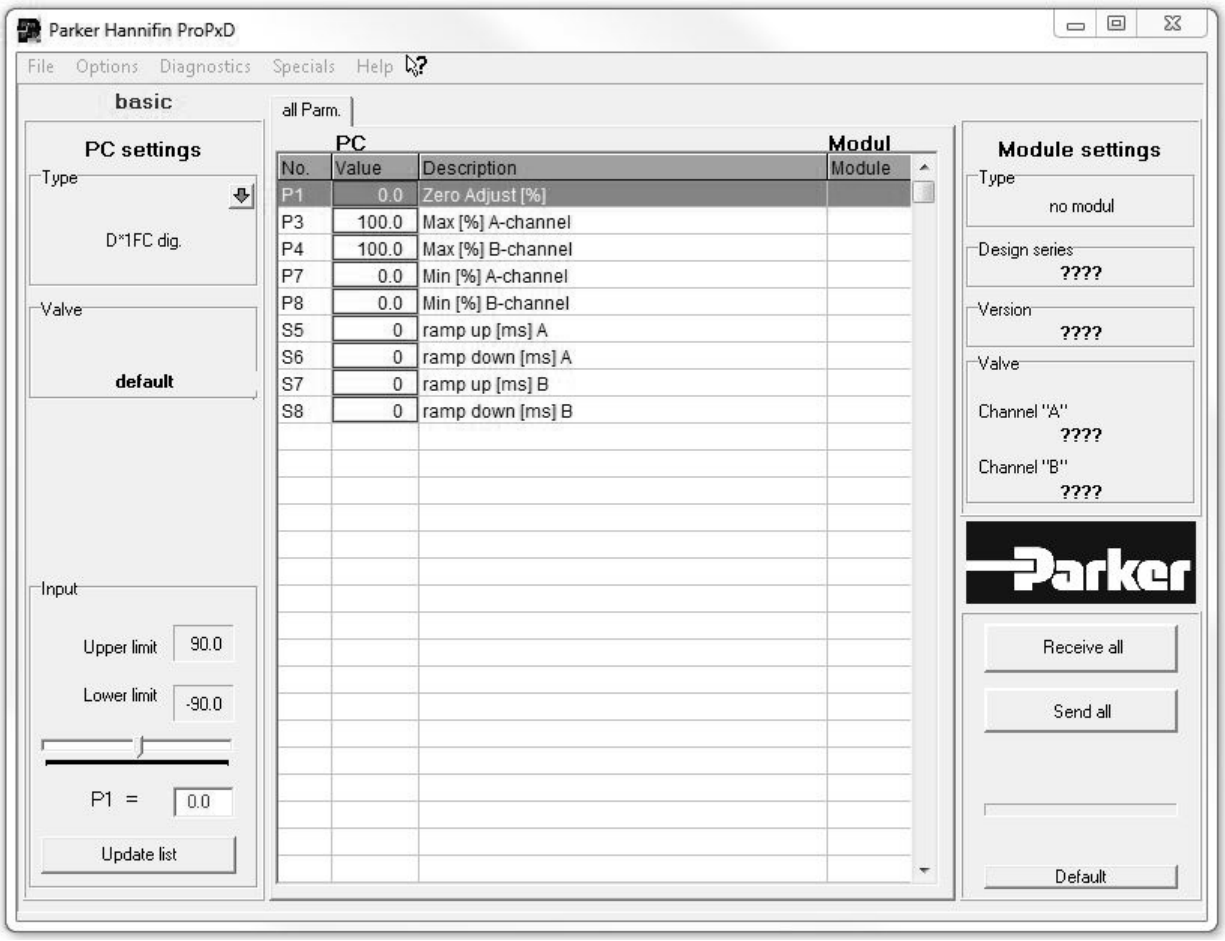

3

Pilot oil inlet (supply) and outlet (drain)

○ open, ● closed

Pilot oil Inlet	Pilot oil Drain	B	C
internal	external	○	●
external	external	●	●
internal	internal	○	○
external	internal	●	○

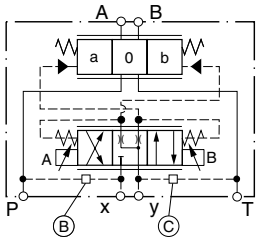

D31FCB/E

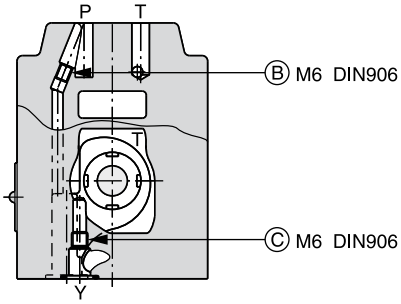

(drawn offset)

D31FCR

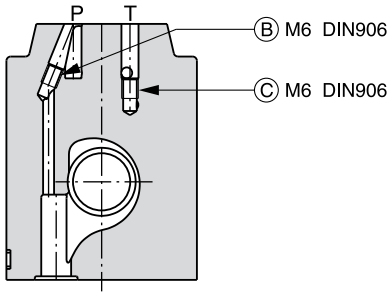

D41FCB/E

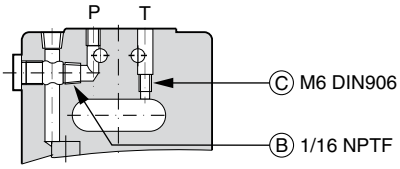

D41FCR

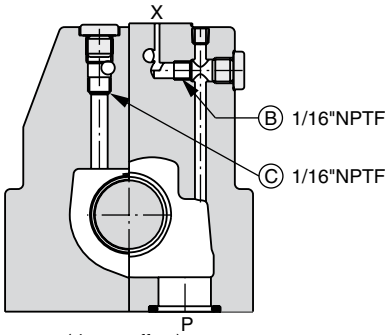

(drawn offset)

D41FCZ

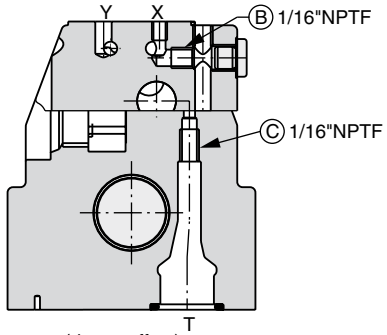

(drawn offset)

D91FCB/E

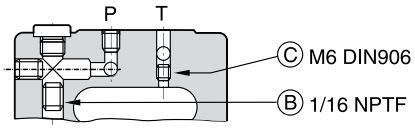

D91FCR

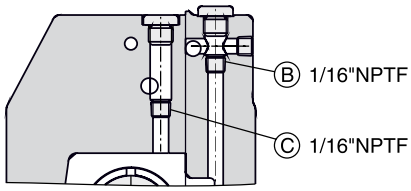

(drawn offset)

D91FCZ

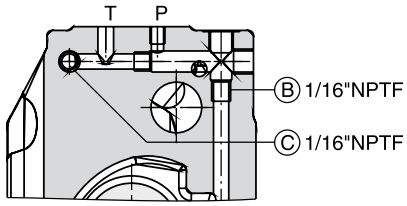

D111FCB/E

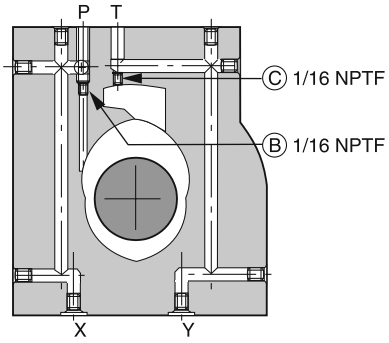

D111FCR

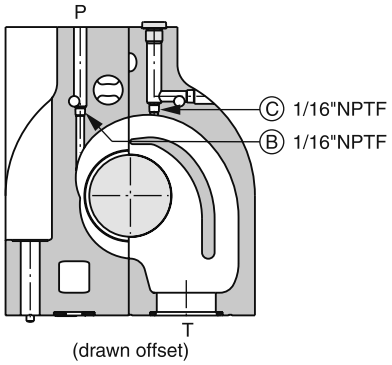

(drawn offset)

D111FCZ

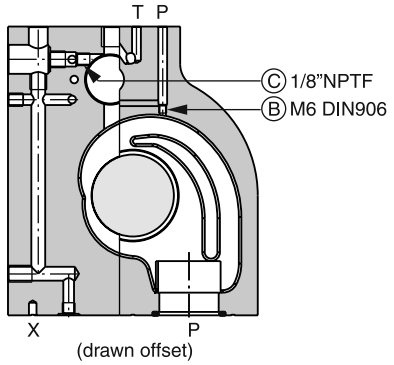

(drawn offset)

D_1FC UK.indd RH 09.10.2015

D31FC

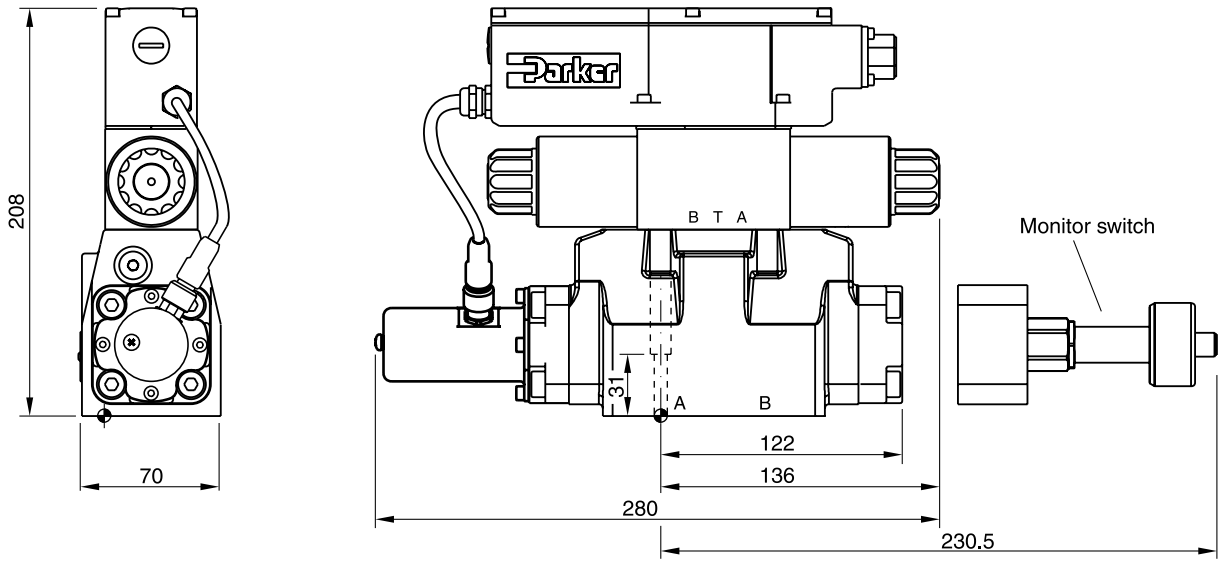

Regenerative and hybrid function with additional plate "H10-1666L / H10-1662 / A10-1664 / A10-1665L", see chapter 12.

Surface finish	Kit			Kit
R_{max}6.3 ▱ 0.01/100	BK385	4x M6x40 ISO 4762-12.9	13.2 Nm ±15 %	NBR: SK-D31FC FPM: SK-D31FC-V

D41FC

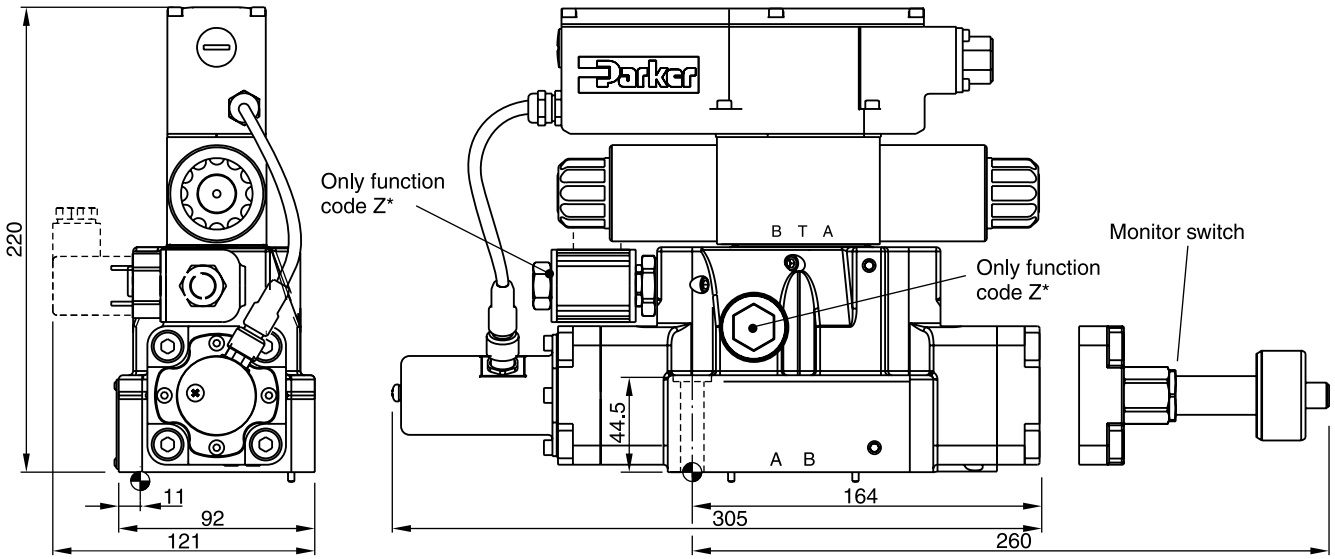

Surface finish	Kit			Kit
R_{max}6.3 ▱ 0.01/100	BK320	2x M6x55 4x M10x60 ISO 4762-12.9	13.2 Nm ±15 % 63 Nm ±15 %	NBR: SK-D41FC FPM: SK-D41FC-V

3

D91FC

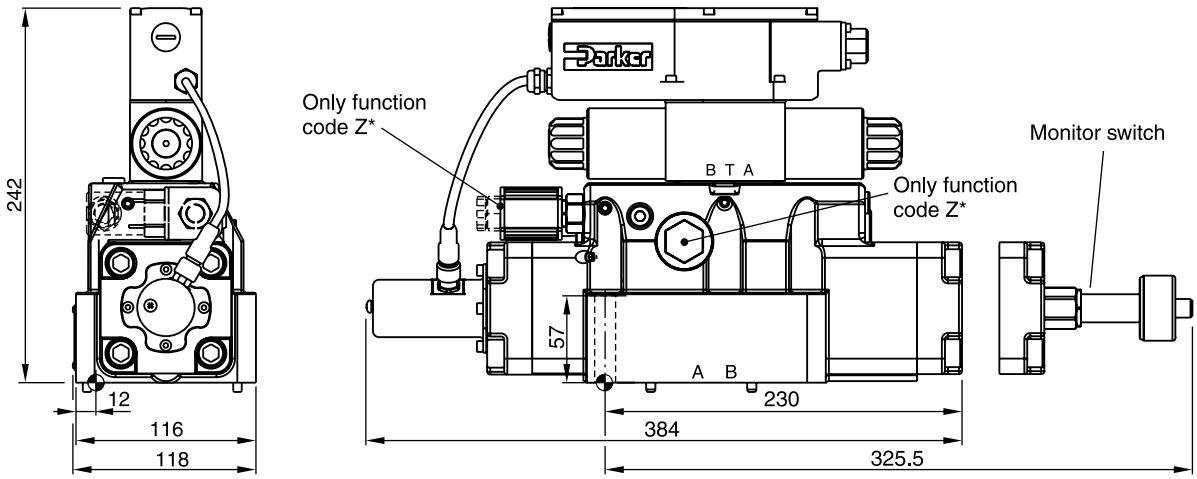

Surface finish	Kit			Kit
R_{max}6.3 / 0.01/100	BK360	6x M12x75 ISO 4762-12.9	108 Nm ±15 %	NBR: SK-D91FC FPM: SK-D91FC-V

D111FC

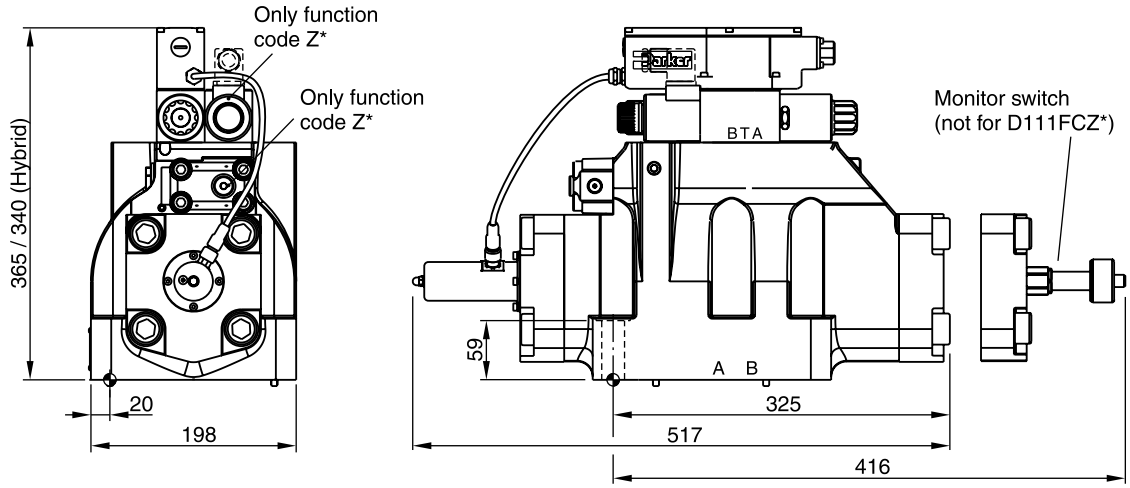

Surface finish	Kit			Kit
R_{max}6.3 / 0.01/100	BK386	6x M20x90 ISO 4762-12.9	517 Nm ±15 %	NBR: SK-D111FC FPM: SK-D111FC-V

Introduction

The new proportional valves with position feedback series D*FC (direct operated) and D*1FC (pilot operated) with EtherCAT interface fulfill the requirements of modern communication between valve and main control. Due to high data transmission speed and short cycle times, also demanding control functions can be realized within the fieldbus system.

The valve is actuated and monitored by the EtherCAT interface. Actual value (spool position), temperature, operating hours and different error messages are available as diagnostic signals. The valve parameters are factory set and can be adapted with the Parker ProPxD software via the parametrizing interface.

In addition to the fieldbus communication, the valves provide the range of functions of the standard version including analogue command signal and diagnostic spare stroke. Thus they can be operated independent of the fieldbus control, particularly during commissioning and maintenance.

The option with EtherCAT is available for the series:

- D1FC, D3FC
- D31FC, D41FC, D91FC, D111FC

D1FC with EtherCAT

Features EtherCAT interface

- EtherCAT interface, 2x M12x1 connector 4-Pin (EtherCAT In and EtherCAT Out)
- Progressive flow characteristics for sensitive adjustment
- Low hysteresis
- High dynamics
- High flow capacity
- Onboard electronics

Technical Data

Electrical			
Duty ratio		[%]	100
Protection class			IP65 in accordance with EN 60529 (with correctly mounted plug-in connector)
Supply voltage/ripple		[V]	18...30, electric shut-off at < 17, ripple < 5 % eff., surge free
Current consumption max.		[A]	2.0 (D1FC, D*1FC), 3.5 (D3FC)
Pre fusing medium lag		[A]	2.5 (D1FC, D*1FC), 4.0 (D3FC)
Differential input		[V]	30 for terminal D and E against PE (terminal G)
Diagnostic signal		[V]	+10...0...-10 / +12.5 error detection
EMC			EN 61000-6-2, EN 61000-6-4
Electrical connection			6 + PE acc. to EN 175201-804
EtherCAT interface			2 x socket M12x1: 5p acc. to IEC61076-2-101
Wiring min.		[mm²]	3 x 1.0 (AWG16) overall braid shield
Wiring length max.		[m]	50
Wiring EtherCAT			acc. to CiA DS-301 Version 4 / Twisted pair cable acc. to ISO11898
EtherCAT profiles			Communication Layer IEC 61158-x-12, 301 Version 4 Device Profile in accordance with CIA DS - 408 Version 1.5.2 CANopen over EtherCAT (object dictionary)
Functionality			One PDO (Receive) One PDO (Transmit) BUS-cycle time down to 0.250 mSec.
Parameterization			
Interface			RS 232, parametrizing cable order code 40982923
Interface program			ProPxD (see www.parker.com/propxd)
Adjustment ranges	Min	[%]	0...50
	Max	[%]	50...100
	Ramp	[%]	0...32.5

3

Direct Operated Proportional DC Valve

D		F	C		C	9		N00	
DC valve	**Size**	**Proportional control**	**High dynamics**	**Spool type**	**Spool position on power down**	**Drain port Y (plugged)**	**Seals**	**EtherCAT interface**	**Design series** (not required for ordering)

Code	Size
1	NG06 / CETOP 03
3	NG10 / CETOP 05

See ordering code for valve series without EtherCAT

Pilot Operated Proportional DC Valve

D		1	F	C			C			N00	
DC valve	**Size**	**NG06 pilot valve**	**Proportional control**	**Integrated electronics with position feedback**	**Function**	**Flow**	**Spool position on power down**	**Pilot connection**	**Seals**	**EtherCAT interface**	**Design series** (not required for ordering)

Code	Size
3	NG10 / CETOP 05
4	NG16 / CETOP 07
9	NG25 / CETOP 08
11	NG32 / CETOP 10

See ordering code for valve series without EtherCAT

Please order connector separately, see chapter 3 accessories.
Parametrizing cable OBE → RS232, item no. 40982923

Block diagram Code N00

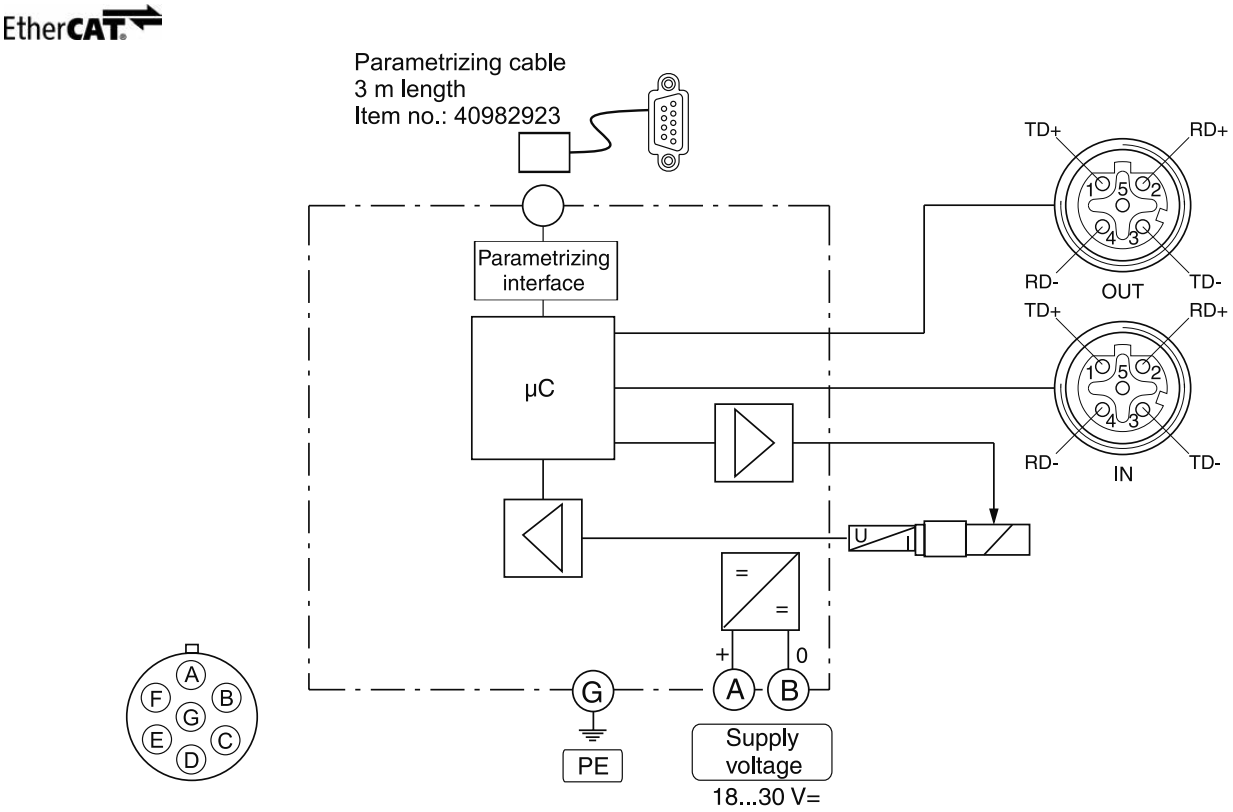

Dimensions D1FC with EtherCAT

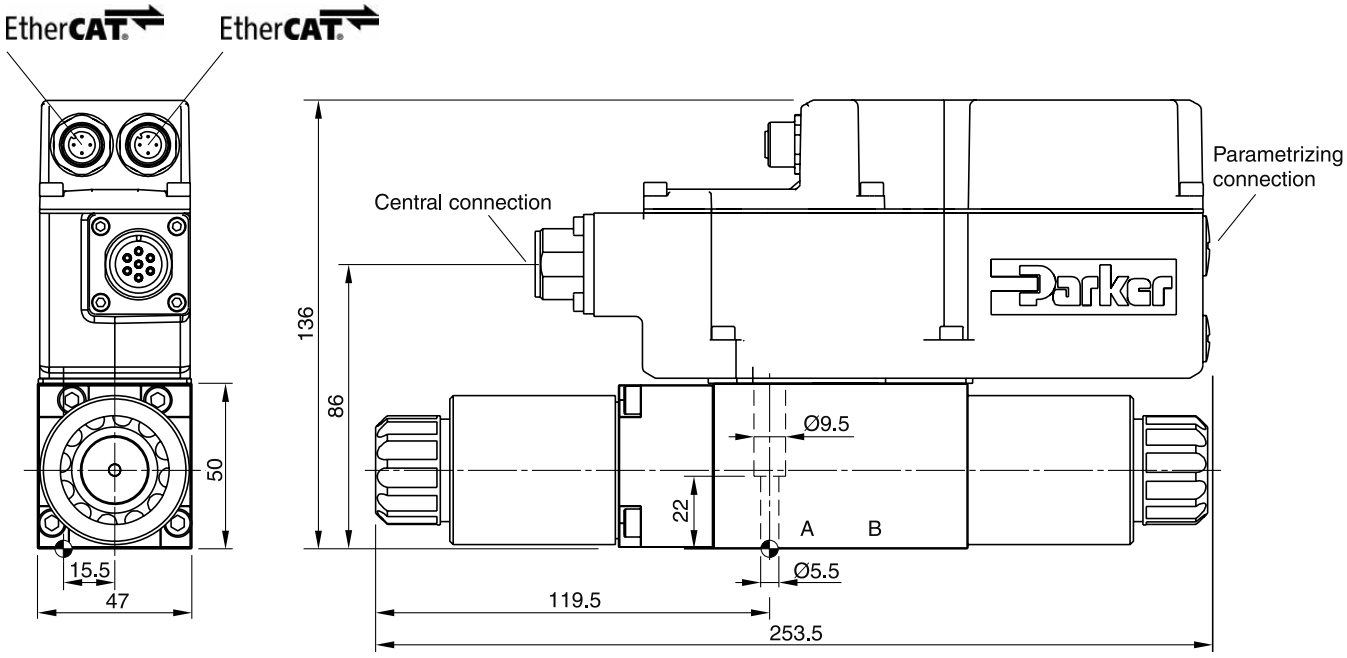

3

The direct operated control valve D1FP of the nominal size NG06 (CETOP 03) shows extremly high dynamics combined with maximum flow. It is the preferred choice for highest accuracy in positioning of hydraulic axis and controlling of pressure and velocity.

Driven by the patented VCD® actuator the D1FP reaches the frequency response of real servovalves. Compared with solenoid driven valves the D1FP can also be used in applications with pressure drops up to 350 bar across the valve. Because of the high flow capability the D1FP can be a substitute for NG10 valves in some cases.

At power-down the spool moves in a defined position. All common input signals are available.

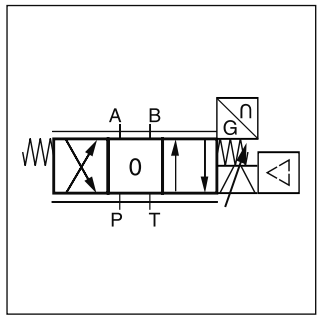

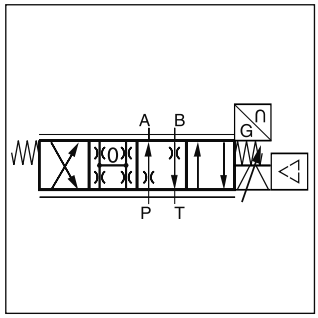

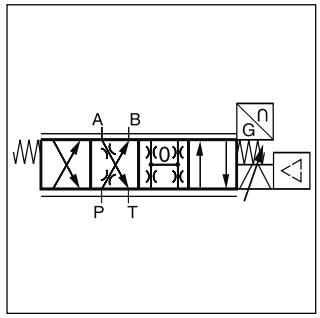

Features

- Real servovalve dynamics
  (-3 dB / 350 Hz at ±5 % input signal)
- No flow limit up to 350 bar pressure drop through the valve
- Max. tank pressure 350 bar
  (with external drain port y)
- High flow
- Defined spool positioning at power-down - optional
  P-A/B-T or P-B/A-T or center position
  (for overlapped spools)
- Onboard electronics

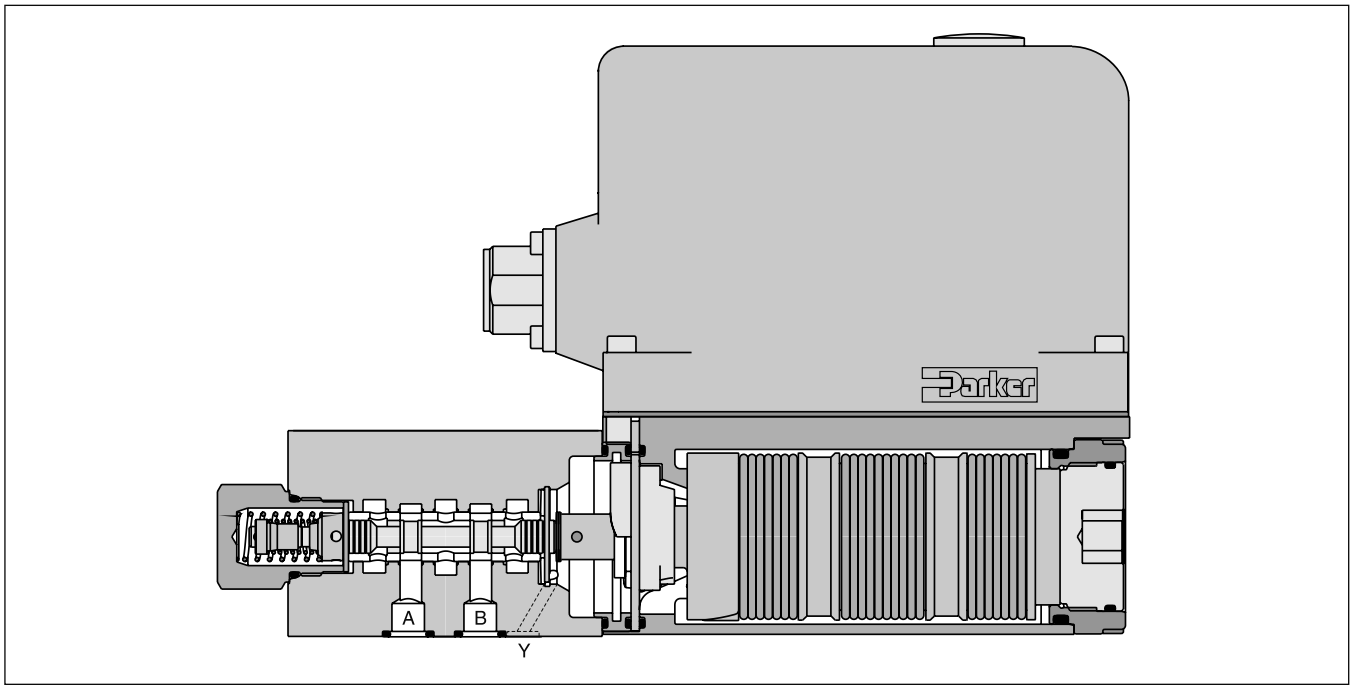

D	1	F	P			9				0	
Directional control valve	**Size DIN NG06 CETOP 03 NFPA D03**	**Proportional control**	**VCD**	**Spool type**	**Spool position on power down [1]**	**Y-port (plugged) [5]**	**Seals**	**Command signal**	**Acces-sories**	**Spool/ sleeve design**	**Design series** (not required for ordering)

Code	Spool type	Flow [l/min] at Δp 35 bar per metering edge
	Zerolap	
E50B		**3**
E50C		**6**
E50F		**12**
E50G		**16**
E50H		**25**
E50M		**40**
B60C	$Q_B = Q_A/2$ 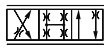	**6 / 3**
B60F		**12 / 6**
B60G		**16 / 8**
B60H		**25 / 12.5**
B60M		**40 / 20**
	Underlap	
E55B	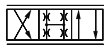	**3**
E55C		**6**
E55F		**12**
E55G		**16**
E55H		**25**
E55M		**40**
	Overlap	
E01B	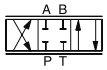	**3**
E01C		**6**
E01F		**12**
E01G		**16**
E01H		**25**
E01M		**40**
B31C	$Q_B = Q_A/2$	**6 / 3**
B31F		**12 / 6**
B31G		**16 / 8**
B31H		**25 / 12.5**
B31M		**40 / 20**
E02B		**3**
E02C		**6**
E02F		**12**
E02G		**16**
E02H		**25**
E02M		**40**
B32C	$Q_B = Q_A/2$	**6 / 3**
B32F		**12 / 6**
B32G		**16 / 8**
B32H		**25 / 12.5**
B32M		**40 / 20**

Code	Connection type
0	**6 + PE acc. EN175201-804**
5	**11 + PE acc. EN175201-804**
7	**6 + PE + Enable**

Code	Signal	Function
B	**+/- 10 V**	**0...+10 V -> P-A**
E	**+/- 20 mA**	**0...+20 mA -> P-A**
S	**4...20 mA**	**12...20 mA -> P-A**

Code	Seals
N	**NBR**
V	**FPM**
H	**for HFC fluid**

Code	Spool position at power down
A [2]	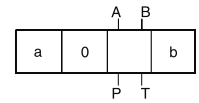
B [2]	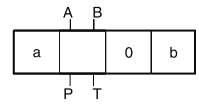
C [3]	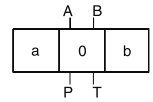
H [4]	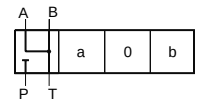
J [4]	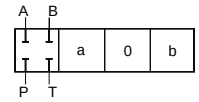

Short delivery time for all variations

Note:

Adapter plate for ISO 4401 to ISO 10372 size 04, Ordering code HAP04WV06-1661
Please order connector separately, see chapter 3 accessories.
Parametrizing cable OBE -> RS232, item no. 40982923

[1] On power down the spool moves in a defined position. This cannot be guaranteed in case of single flow path on the control edge A – T resp. B – T with pressure drops above 120 bar or contamination in the hydraulic fluid.
[2] Approx. 10 % opening, only zero lapped spools and underlap spools.
[3] Only for overlapped spools.
[4] Not for flow code M (40 l/min).
[5] Plug in the Y-port needs to be removed at tank pressure >35 bar.

D1FP UK.indd RH 17.04.2015

3

General		
Design		Direct operated servo proportional DC valve
Actuation		VCD® actuator
Size		**NG06 / CETOP 03 / NFPA D03**
Mounting interface		DIN 24340 / ISO 4401 / CETOP RP121 / NFPA
Mounting position		unrestricted
Ambient temperature	[°C]	-20...+50
$MTTF_D$ value [1]	[years]	150
Weight	[kg]	5.0
Vibration resistance	[g]	10 Sinus 5...2000 Hz acc. IEC 68-2-6 30 Random noise 20...2000 Hz acc. IEC 68-2-36 15 Shock acc. IEC 68-2-27
Hydraulic		
Max. operating pressure	[bar]	Ports P, A, B 350, port T 35 for internal drain, 350 for external drain, port Y 35 [2]
Fluid		Hydraulic oil according to DIN 51524 ... 535, other on request
Fluid temperature	[°C]	-20...+60 (NBR: -25...+60)
Viscosity permitted	[cSt]/mm²/s]	20...400
recommended	[cSt]/mm²/s]	30...80
Filtration		ISO 4406 (1999); 18/16/13
Nominal flow at Δp=35 bar per control edge [3]	[l/min]	3 / 6 / 12 / 16 / 25 / 40
Flow maximum	[l/min]	90 (at Δp=350 bar over two control edges)
Leakage at 100 bar	[ml/min]	<400 (zerolap spool); <50 (overlap spool)
Opening point	[%]	set to 23 commande signal (see flow characteristics)
Static / Dynamic		
Step response at 100 % step [4]	[ms]	<3.5
Frequency response (±5 % signal) [4]	[Hz]	350 (amplitude ratio -3 dB), 350 (phase lag -90°)
Hysteresis	[%]	<0.05
Sensitivity	[%]	<0.03
Temperature drift	[%/K]	<0.025
Electrical characteristics		
Duty ratio	[%]	100
Protection class		IP65 in accordance with EN 60529 (with correctly mounted plug-in connector)
Supply voltage/ripple	[V]	DC 22 ... 30, electric shut-off at < 19, ripple < 5 % eff., surge free
Current consumption max.	[A]	3.5
Pre-fusing	[A]	4.0 medium lag
Input signal		
Code B Voltage	[V]	10...0...-10, ripple <0.01 % eff., surge free, 0...+10 V P->A
Impedance	[kOhm]	100
Code E Current	[mA]	20...0...-20, ripple <0.01 % eff., surge free, 0...+20 mA P->A
Impedance	[Ohm]	250
Code S Current	[mA]	4...12...20, ripple <0.01 % eff., surge free, 12...20 mA P->A <3.6 mA = disable, >3.8 mA = according to NAMUR NE43
Impedance	[Ohm]	250
Differential input max.		
Code 0	[V]	30 for terminal D and E against PE (terminal G)
Code 5	[V]	30 for terminal 4 and 5 against PE (terminal ⏚)
Code 7	[V]	30 for terminal D and E against PE (terminal G)
Enable signal (only code 5/7)	[V]	5...30, Ri = 9 kOhm
Diagnostic signal	[V]	+10...0...-10 / +12.5 error detection, rated max. 5 mA
EMC		EN 61000-6-2, EN 61000-6-4
Electrical connection	Code 0/7	6 + PE acc. EN 175201-804
	Code 5	11 + PE acc. EN 175201-804
Wiring min. Code 0/7	[mm²]	7x1.0 (AWG 16) overall braid shield
Code 5	[mm²]	8x1.0 (AWG 16) overall braid shield
Wiring length max.	[m]	50

[1] If valves with onboard electronics are used in safety-related parts of control systems, in case the safety function is requested, the valve electronics voltage supply is to be switched off by a suitable switching element with sufficient reliability.

[2] For applications with p_T>35 bar (max. 350 bar) the Y-port has to be connected and the plug in the Y-port has to be removed.

[3] Flow rate for different Δp per control edge: $Q_x = Q_{Nom.} \cdot \sqrt{\frac{\Delta p_x}{\Delta p_{Nom.}}}$

[4] Measured with load (100 bar pressure drop/two control edges).

Flow curves
(Overlapped spool set to opening point 23 %)
at Δp = 35 bar per metering edge
Spool type **E01/E50**

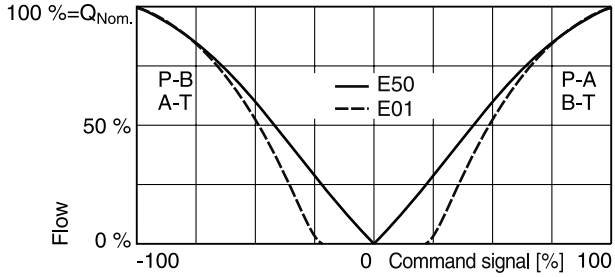

Spool type **B31/B60**

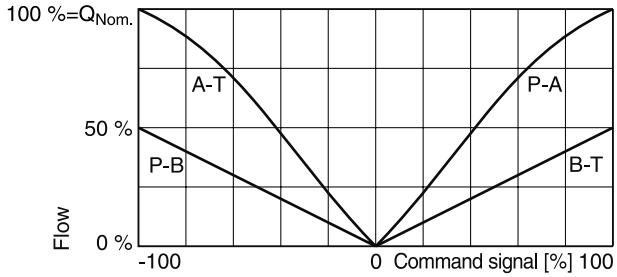

Pressure gain

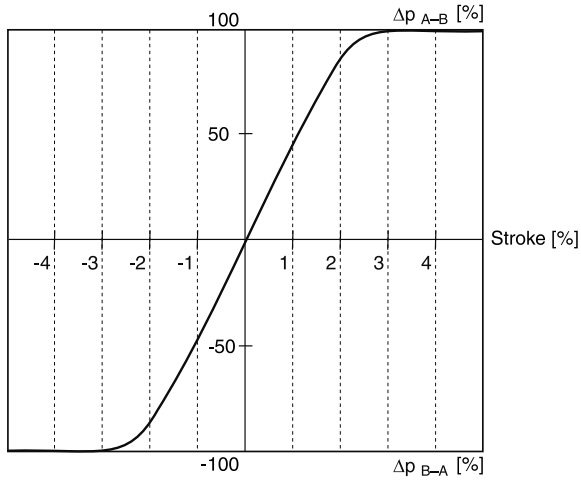

Functional limits
at 25 %, 50 %, 75 % and 100 % command signal
Spool type **E01M/E50M**

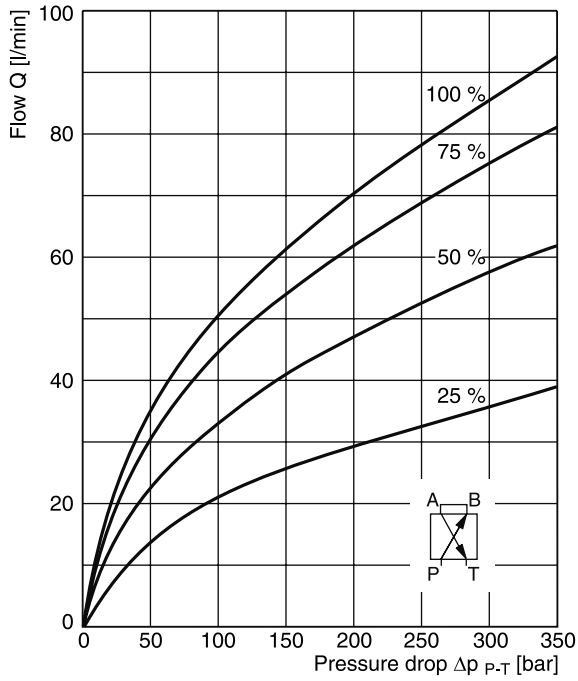

Frequency response
±5 % command signal
±90 % command signal

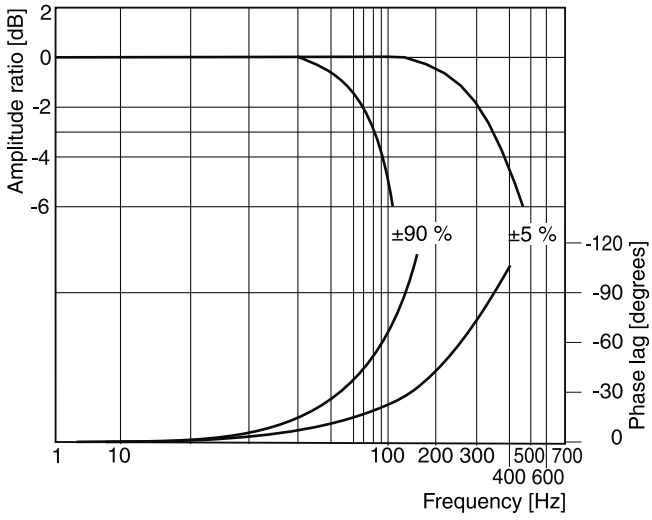

All characteristic curves measured with HLP46 at 50 °C.

3

Code 0

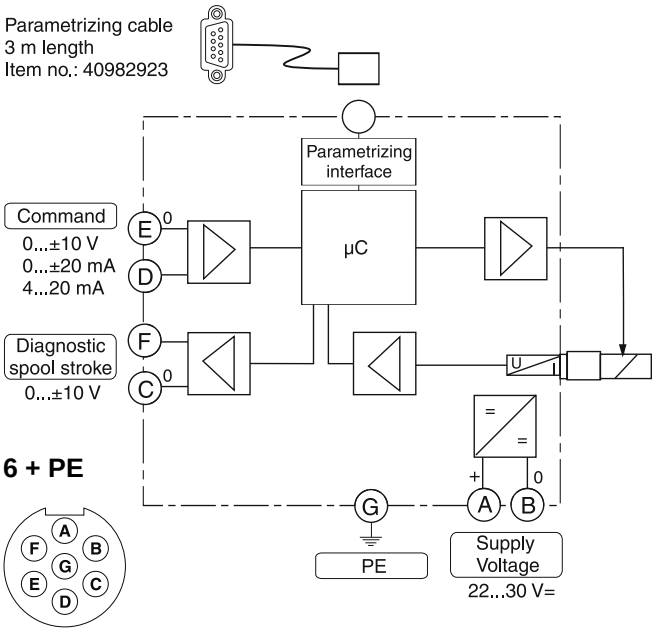

6 + PE

Code 5

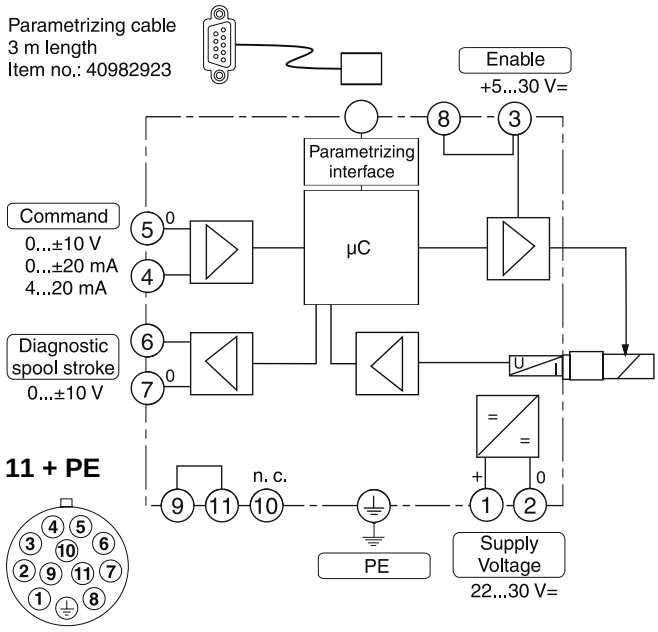

11 + PE

Code 7

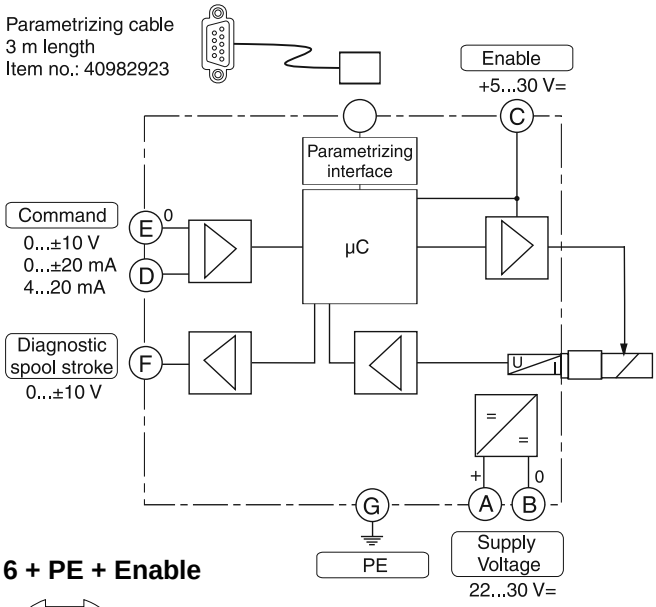

6 + PE + Enable

ProPxD interface program

The ProPxD software allows quick and easy setting of the digital valve electronics. Individual parameters as well as complete settings can be viewed, changed and saved via the comfortable user interface. Parameter sets saved in the non-volatile memory can be loaded to other valves of the same type or printed out for documentation purposes.

The PC software can be downloaded free of charge at www.parker.com/euro_hcd – see page “Support" or directly at www.parker.com/propxd.

Features

- Comfortable editing of valve parameters
- Saving and loading of customized parameter sets
- Executable with all Windows® operating systems from Windows® XP upwards
- Simple communication between PC and valve electronics via serial interface RS232C

The valve electronics cannot be connected to a PC with a standard USB cable – this can result in damages of PC and/or valve electronics.

The parametrizing cable may be ordered under item no. 40982923.

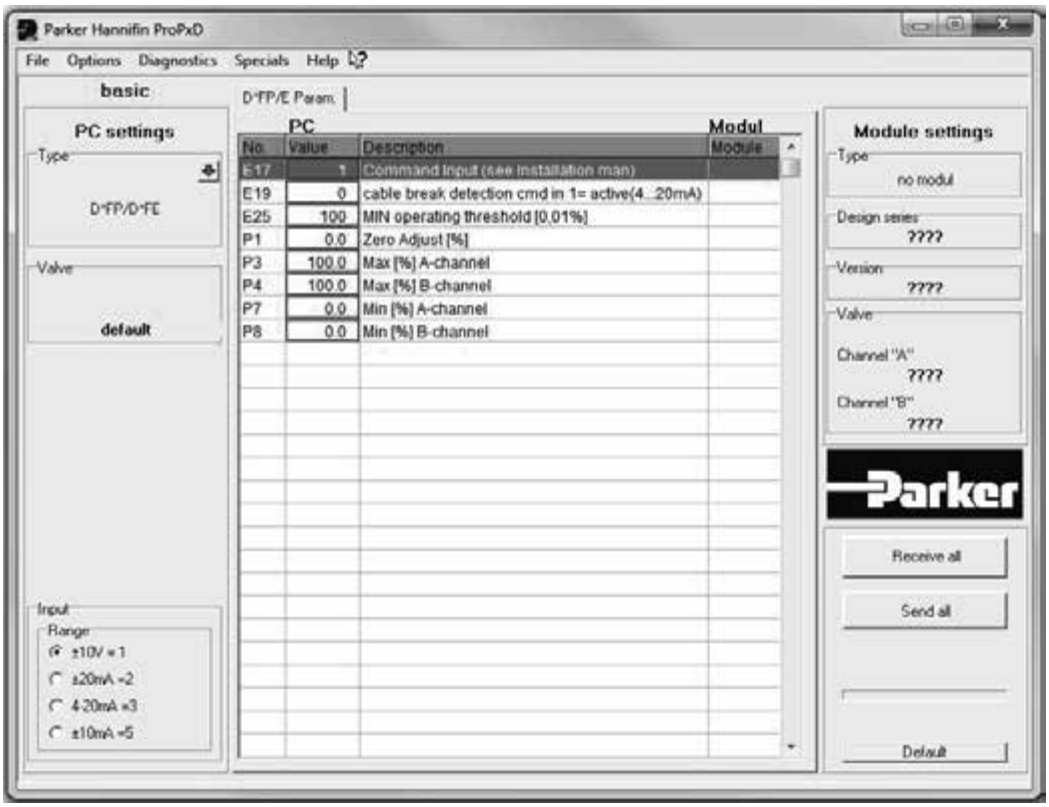

3

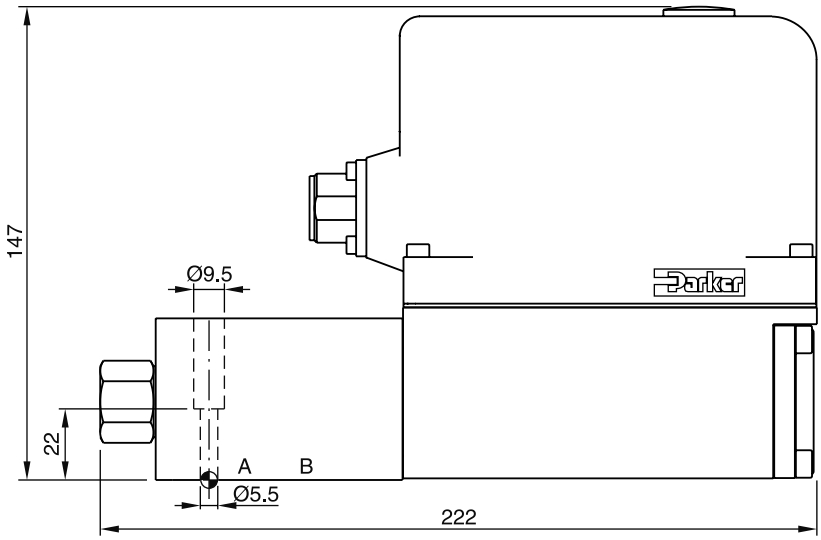

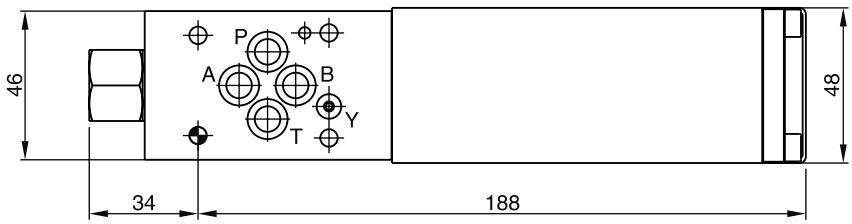

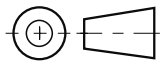

Surface finish	Kit			Kit
R_{max}6.3 ▱ 0.01/100	BK375	4x M5x30 ISO 4762-12.9	7.6 Nm ±15 %	NBR: SK-D1FP FPM: SK-D1FP-V HFC: SK-D1FP-H

The direct operated control valve D3FP of the nominal size NG10 (CETOP 05) shows extremly high dynamics combined with high flow. It is the preferred choice for highest accuracy in positioning of hydraulic axis and controlling of pressure and velocity.

Driven by the patented VCD® actuator the D3FP reaches the frequency response of real servovalves.

At power-down the spool moves in a defined position. All common input signals are available.

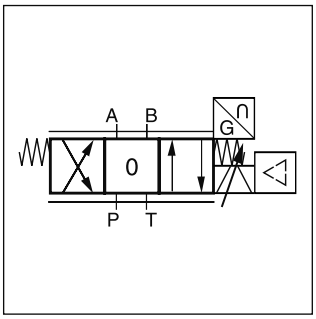

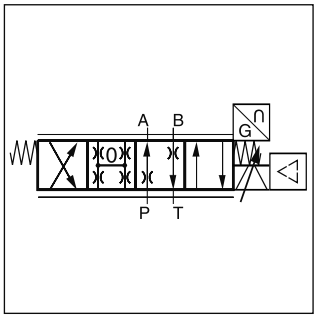

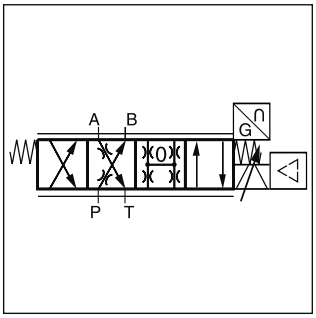

Features

- Real servovalve dynamics
  (-3 dB / 350 Hz at ±5 % input signal)
- Max. tank pressure 250 bar
  (with external drain port Y)
- Defined spool positioning at power-down - optional
  P-A/B-T or P-B/A-T or center position
  (for overlapped spools)
- Onboard electronics
- Spool / sleeve design

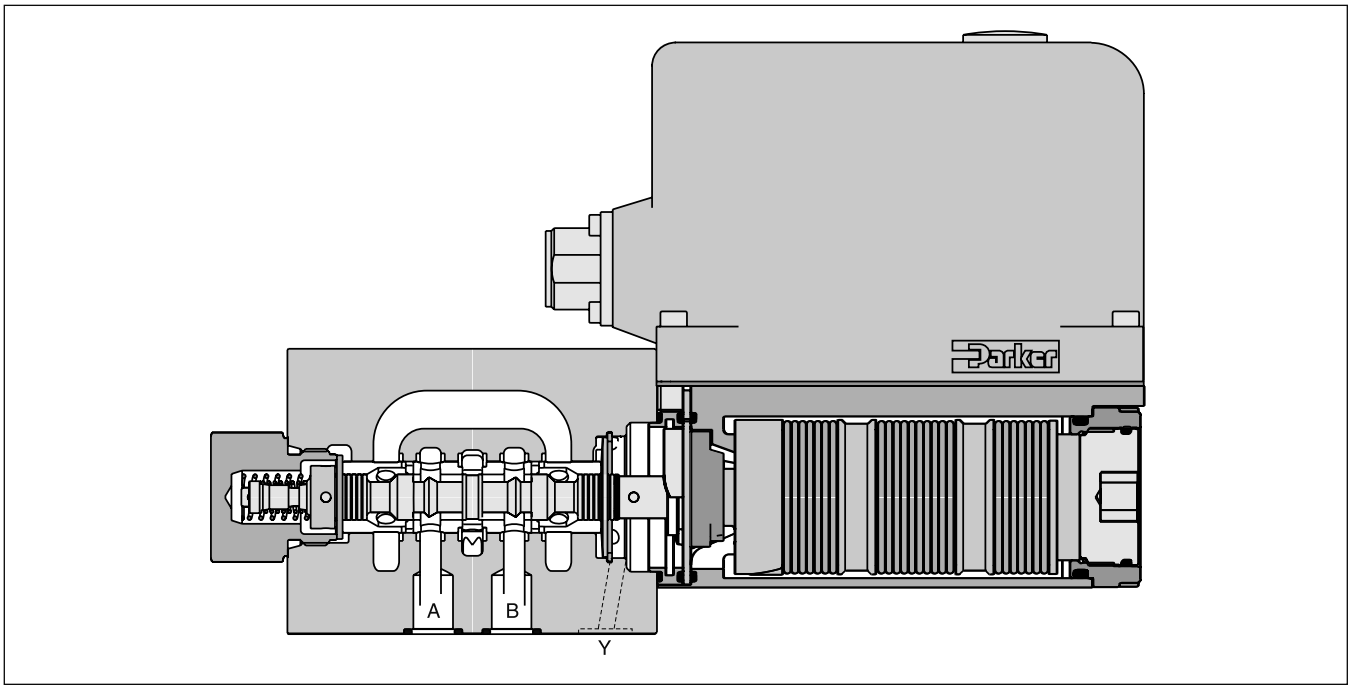

3

D	3	F	P			9				0	
Direct. control valve	**Size DIN NG10 CETOP 05 NFPA D05**	**Proportional control**	**VCD**	**Spool type**	**Spool position on power down [1]**	**Y-port (plugged) [4]**	**Seals**	**Command signal**	**Acces-sories**	**Spool/ sleeve design**	**Design series** (not required for ordering)

Code	Spool type	Flow [l/min] at Δp 35 bar per metering edge
Zerolap		
E50P	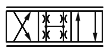	**50**
E50Y		**100**
B60P	$Q_B = Q_A/2$ 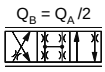	**50**
B60Y	$Q_B = Q_A/2$ 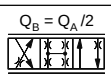	**100**
Underlap approx. -0.5 %		
E55P		**50**
E55Y		**100**
Overlap		
E01P **E01Y**	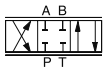	**50** **100**
E02P **E02Y**		**50** **100**
B31P **B31Y**	$Q_B = Q_A/2$	**50 / 25** **100 / 50**
B32P **B32Y**	$Q_B = Q_A/2$	**50 / 25** **100 / 50**

Code	Connection type
0	**6 + PE acc. EN175201-804**
5	**11 + PE acc. EN175201-804**
7	**6 + PE + Enable**

Code	Signal	Function
B	**+/- 10 V**	**0...+10 V -> P-A**
E	**+/- 20 mA**	**0...+20 mA -> P-A**
S	**4...20 mA**	**12...20 mA -> P-A**

Code	Seals
N	**NBR**
V	**FPM**
H	**for HFC fluid**

Code	Spool pos. at power down
A [2]	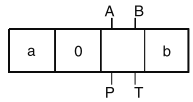
B [2]	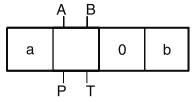
C [3]	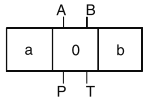

Short delivery time for all variations

For regenerative and hybrid function at D31FB (NG10) please refer solutions with sandwich- and adaptor plates "A10-1664 / A10-1665L / H10-1662 / H10-1666L" in chapter 12.

Please order connector separately, see chapter 3 accessories.

Parametrizing cable OBE -> RS232, item no. 40982923

[1] On power down the spool moves in a defined position. This cannot be guaranteed in case of single flow path on the control edge A – T resp. B – T with pressure drops above 120 bar or contamination in the hydraulic fluid.

[2] Approx. 10 % opening, only zerolapped spools and underlapped spools.

[3] Only for overlapped spools.

[4] Plug in the Y-port needs to be removed at tank pressure >35 bar.

General		
Design		Direct operated servo proportional DC valve
Actuation		VCD® actuator
Size		NG10 / CETOP 05 / NFPA D05
Mounting interface		DIN 24340 / ISO 4401 / CETOP RP121 / NFPA
Mounting position		unrestricted
Ambient temperature	[°C]	-20...+50
$MTTF_D$ value [1]	[years]	150
Weight	[kg]	6.5
Vibration resistance	[g]	10 Sinus 5...2000 Hz acc. IEC 68-2-6 30 Random noise 20...2000 Hz acc. IEC 68-2-36 15 Shock acc. IEC 68-2-27
Hydraulic		
Max. operating pressure	[bar]	Ports P, A, B 350, port T 35 for internal drain, 250 for external drain, port Y 35 [2]
Fluid		Hydraulic oil according to DIN 51524 ... 535, other on request
Fluid temperature	[°C]	-20...+60 (NBR: -25...+60)
Viscosity permitted	[cSt]/[mm²/s]	20...400
Viscosity recommended	[cSt]/[mm²/s]	30...80
Filtration		ISO 4406 (1999); 18/16/13
Flow nominal at Δp=35 bar per control edge [3]	[l/min]	50 / 100
Flow maximum	[l/min]	150
Leakage at 100 bar	[ml/min]	<400 (zerolap spool); <100 (overlap spool)
Opening point	[%]	set to 19 command signal (see flow characteristics)
Static / Dynamic		
Step response at 100 % step [4]	[ms]	<6
Frequency response (±5 % signal) [4]	[Hz]	200 (amplitude ratio -3 dB), 200 (phase lag -90°)
Hysteresis	[%]	<0.05
Sensitivity	[%]	<0.03
Temperature drift	[%/K]	<0.025
Electrical characteristics		
Duty ratio	[%]	100
Protection class		IP65 in accordance with EN 60529 (with correctly mounted plug-in connector)
Supply voltage/ripple	[V]	22 ... 30, electric shut-off at < 19, ripple <5 % eff., surge free
Current consumption max.	[A]	3.5
Pre-fusing	[A]	4.0 medium lag
Input signal		
Code B Voltage	[V]	10...0...-10, ripple <0.01 % eff., surge free, 0...+10 V P->A
Code B Impedance	[kOhm]	100
Code E Current	[mA]	20...0...-20, ripple <0.01 % eff., surge free, 0...+20 mA P->A
Code E Impedance	[Ohm]	250
Code S Current	[mA]	4...12...20, ripple <0.01 % eff., surge free, 12...20 mA P->A <3.6 mA = disable, >3.8 mA = according to NAMUR NE43
Code S Impedance	[Ohm]	250
Differential input max.		
Code 0	[V]	30 for terminal D and E against PE (terminal G)
Code 5	[V]	30 for terminal 4 and 5 against PE (terminal ⏚)
Code 7	[V]	30 for terminal D and E against PE (terminal G)
Enable signal (only code 5/7)	[V]	5...30, Ri = 9 kOhm
Diagnostic signal	[V]	+10...0...-10 / +12.5 error detection, rated max. 5 mA
EMC		EN 61000-6-2, EN 61000-6-4
Electrical connection	Code 0/7	6 + PE acc. EN 175201-804
Electrical connection	Code 5	11 + PE acc. EN 175201-804
Wiring min. Code 0/7	[mm²]	7 x 1.0 (AWG 16) overall braid shield
Wiring min. Code 5	[mm²]	8 x 1.0 (AWG 16) overall braid shield
Wiring length max.	[m]	50

[1] If valves with onboard electronics are used in safety-related parts of control systems, in case the safety function is requested, the valve electronics voltage supply is to be switched off by a suitable switching element with sufficient reliability.

[2] For applications with p_T>35 bar (max. 250 bar) the Y-port has to be connected and the plug in the Y-port has to be removed.

[3] Flow rate for different Δp per control edge: $Q_x = Q_{Nom.} \cdot \sqrt{\frac{\Delta p_x}{\Delta p_{Nom.}}}$

[4] Measured with load (100 bar pressure drop/two control edges).

3

Functional limits [1)]
at 25 %, 50 %, 75 % and 100 % command signal

Spool type **E01/E02**

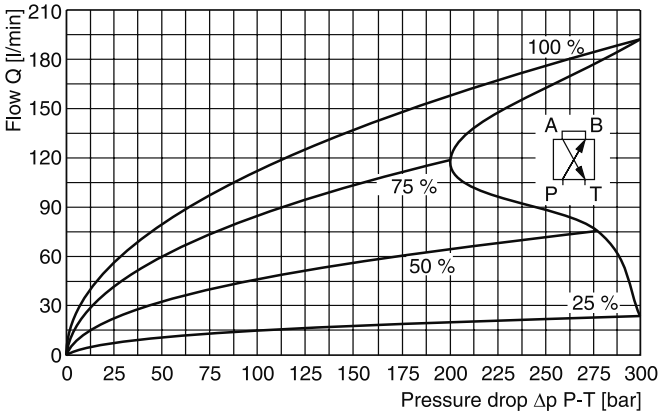

Functional limits [1)]
at 25 %, 50 %, 75 % and 100 % command signal

Spool type **E50/E55**

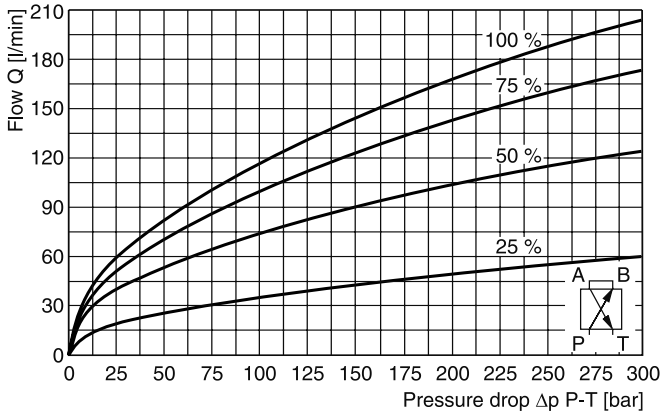

Flow curves
(Overlapped spool set to opening point 19 %)
at Δp = 35 bar per metering edge

Spool type **E50/E55, E01/E02**

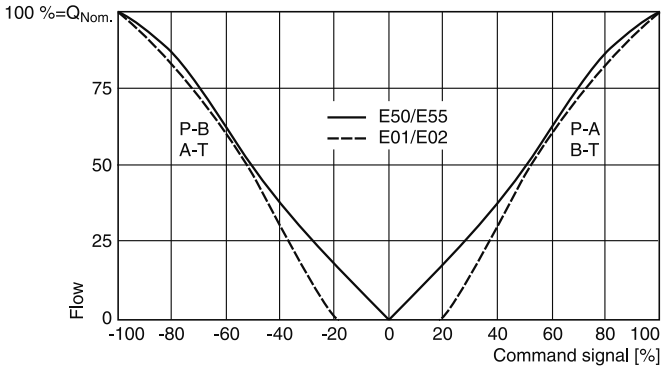

Spool type **B31/B32, B60**

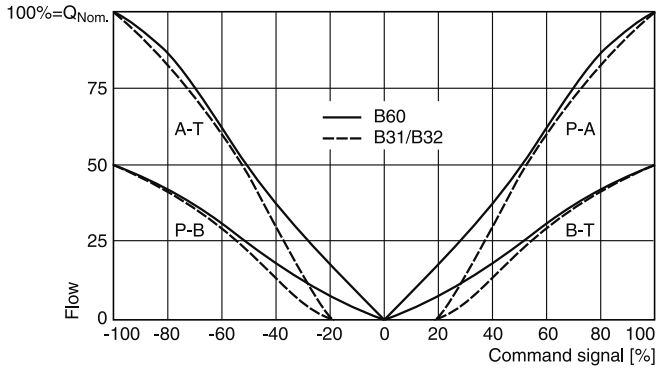

Pressure gain

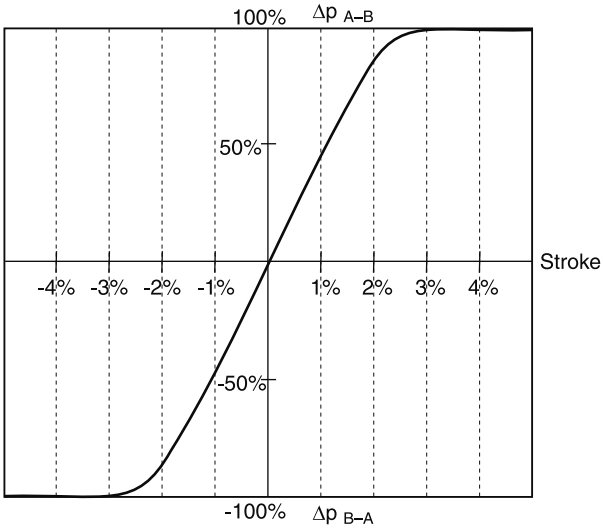

Frequency response
±5 % command signal

±90 % command signal

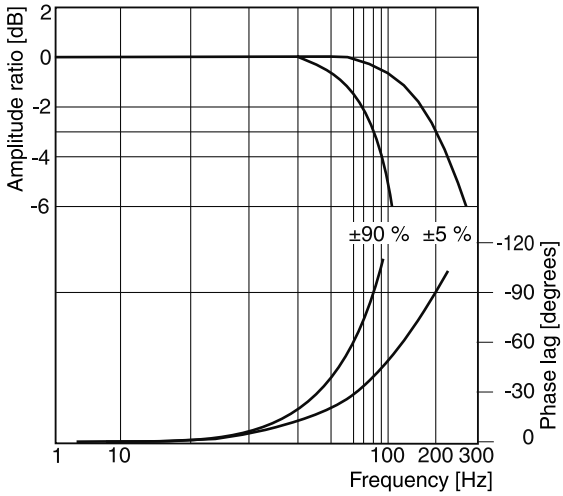

[1)] When exceeding the functional limits, for a period of time the valve will go into fail safe and power supply needs to be switched off/on to re-enable the valve.

Code 0

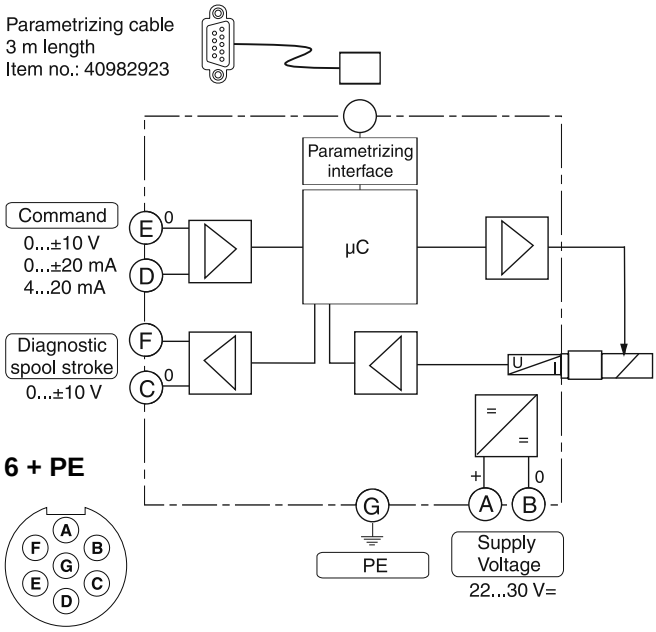

Code 5

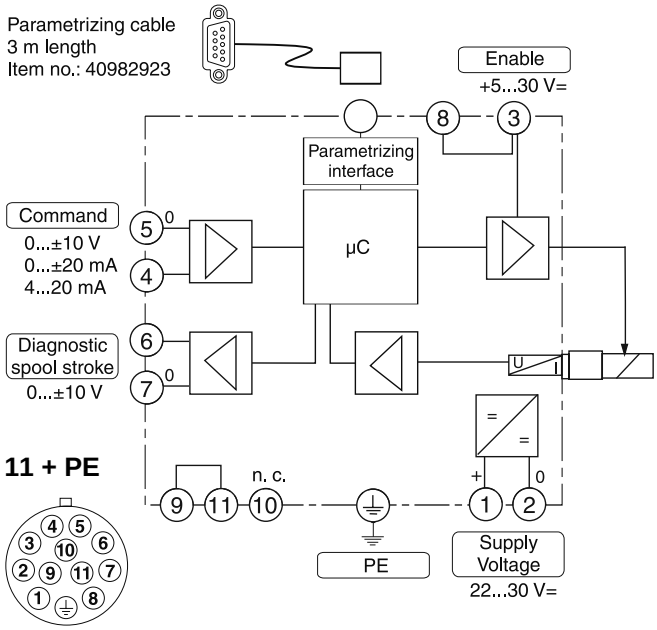

Code 7

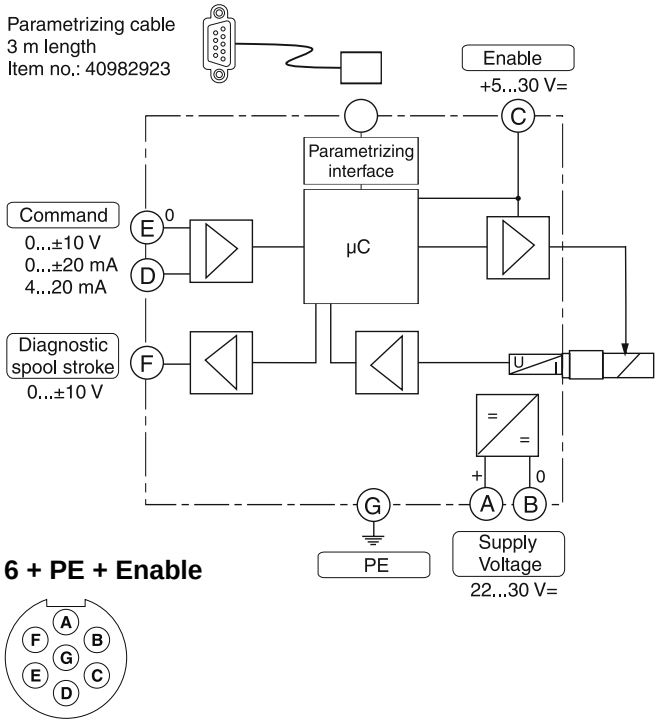

3

ProPxD interface program

The ProPxD software allows quick and easy setting of the digital valve electronics. Individual parameters as well as complete settings can be viewed, changed and saved via the comfortable user interface. Parameter sets saved in the non-volatile memory can be loaded to other valves of the same type or printed out for documentation purposes.

The PC software can be downloaded free of charge at www.parker.com/euro_hcd – see page “Support" or directly at www.parker.com/propxd.

Features

- Comfortable editing of valve parameters
- Saving and loading of customized parameter sets
- Executable with all Windows® operating systems from Windows® XP upwards
- Simple communication between PC and valve electronics via serial interface RS232C

The valve electronics cannot be connected to a PC with a standard USB cable – this can result in damages of PC and/or valve electronics.

The parametrizing cable may be ordered under item no. 40982923.

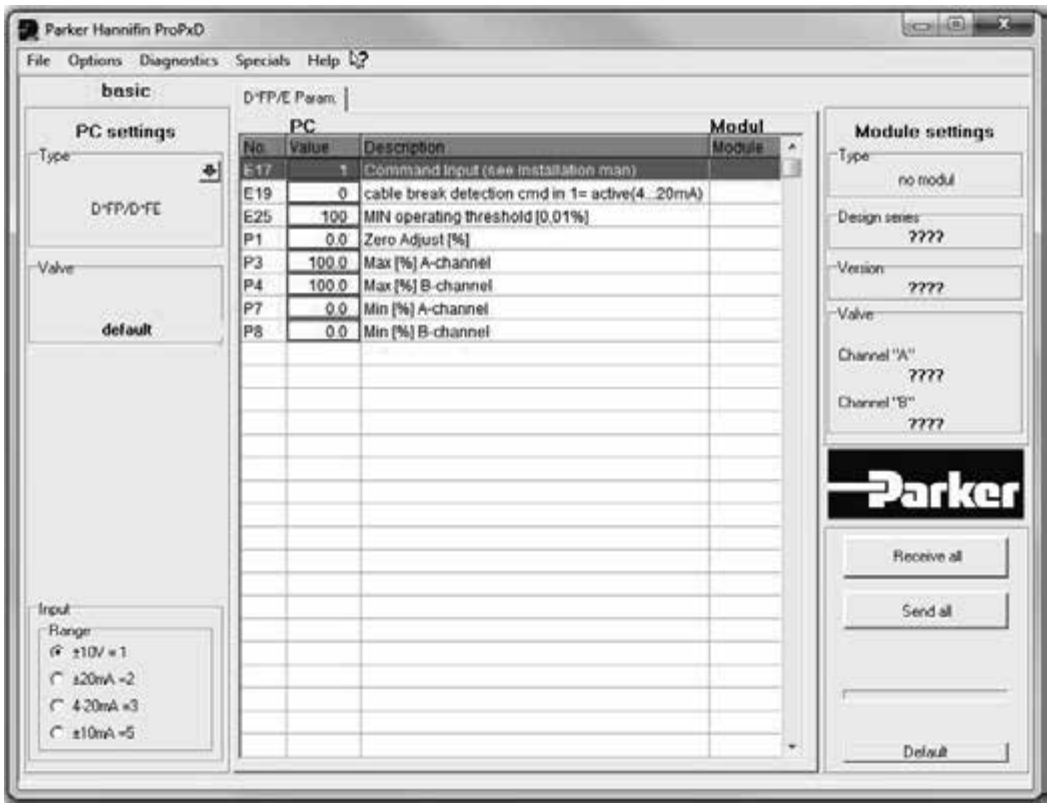

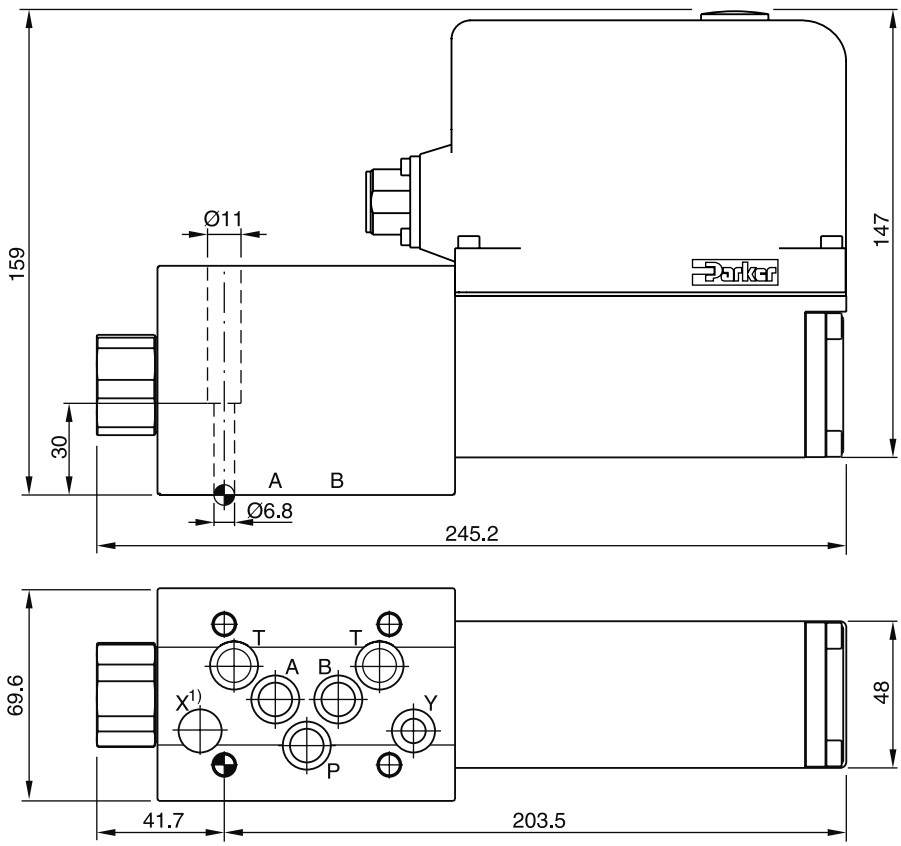

Surface finish	Kit			Kit
R_{max}6.3 0.01/100	BK385	4xM6x40 ISO 4762-12.9	13.2 Nm ±15 %	NBR: SK-D3FP FPM: SK-D3FP-V HFC: SK-D3FP-H

1) O-ring recess diameter on valve body.

The series of pilot operated control valves D30FP closes the gap between the direct operated D3FP valves and the conventional pilot operated D31FP valves.

Providing high flow capacity and practically no flow limits like D31FP in the envelope size of the D3FP.

The valve works with the hydraulic follower principle, with a moving sleeve as main spool.

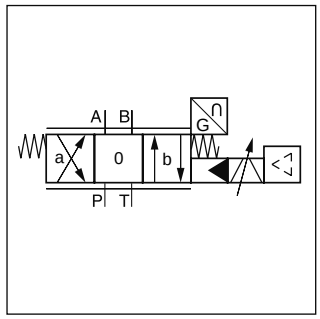

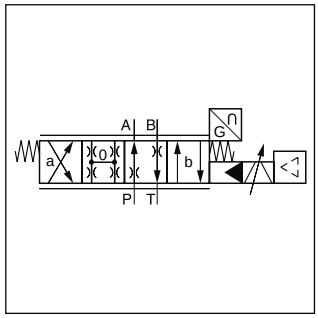

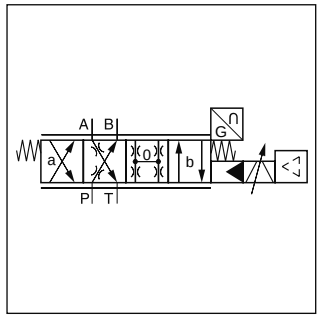

Features

- Pilot operated with hydraulic follower sleeve
- No flow limit up to 350 bar through the valve
- Defined spool positioning at power-down - optional P-A / B-T or P-B / A-T or center position (for overlapped spools)

CE

D30FP*3
with hydraulic follower principle

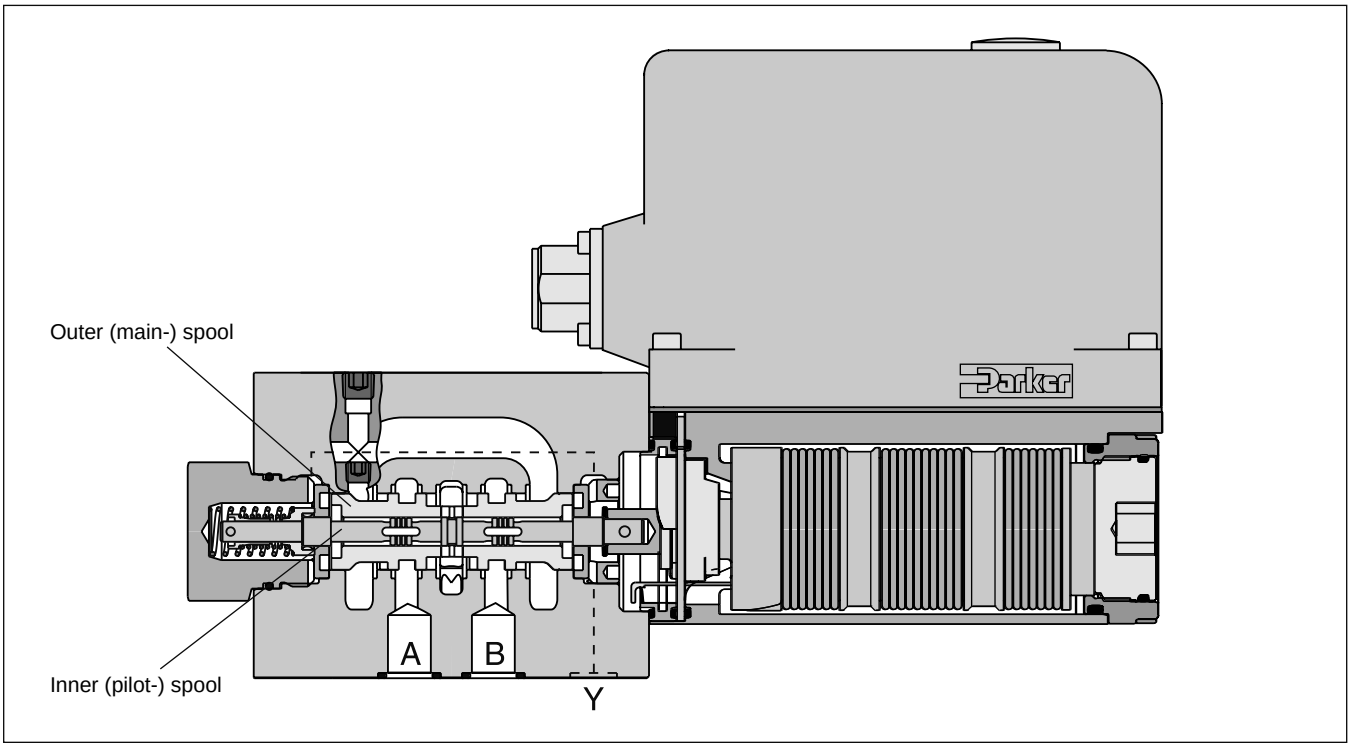

Ordering Code

Series D30FP

D	30	F	P							3	
Direct. control valve	Size DIN NG10 CETOP 05 NFPA D05	Proportional control	VCD	Spool type	Spool position on power down	Pilot connection	Seals	Command signal	Acces-sories	Spool/ body design	Design series (not required for ordering)

Code	Spool type	Flow [l/min] at Δp 5 bar per metering edge
Zerolap		
E50U		**80**
B60U	$Q_B = Q_A/2$ 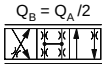	**80**
Overlap		
E01U	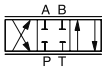	**80**
E02U	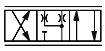	**80**
B31U	$Q_B = Q_A/2$ 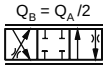	**80**
B32U	$Q_B = Q_A/2$ 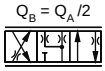	**80**

Code	Spool pos. at power down
A [1]	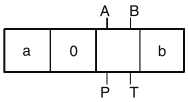
B [1]	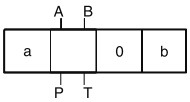
C [2]	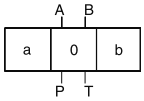

Code	Connection type
0	**6 + PE acc. EN175201-804**
5	**11 + PE acc. EN175201-804**
7	**6 + PE + Enable**

Code	Signal	Function
B	**+/- 10 V**	**0...+10 V -> P-A**
E	**+/- 20 mA**	**0...+20 mA -> P-A**
S	**4...20 mA**	**12...20 mA -> P-A**

Code	Seals
N	**NBR**
V	**FPM**
H	**for HFC fluid**

Code	Inlet	Drain
1 [3]	**internal**	**external**
4	**internal**	**internal**

Short delivery time for all variations

Please order connector separately, see chapter 3 accessories.
Parametrizing cable OBE -> RS232, item no. 40982923

[1] Approx. 10 % opening, only zerolapped spools.
[2] Only for overlapped spools.
[3] For tank pressure >35 bar.

D30FP UK.indd RH 17.04.2015

3

General		
Design		Pilot operated servo proportional DC valve
Actuation		VCD® actuator
Size		NG10 / CETOP 05 / NFPA D05
Mounting interface		DIN 24340 / ISO 4401 / CETOP RP121 / NFPA
Mounting position		horizontal mounting preferred (other mounting positions after consultation)
Ambient temperature	[°C]	-20...+50
$MTTF_D$ value [1]	[years]	75
Weight	[kg]	6.5
Vibration resistance	[g]	10 Sinus 5...2000 Hz acc. IEC 68-2-6 30 Random noise 20...2000 Hz acc. IEC 68-2-36 15 Shock acc. IEC 68-2-27
Hydraulic		
Max. operating pressure	[bar] [bar]	Ports P, A, B 350; Port T 35 for internal drain, 250 for external drain Port Y 35 [2]
Fluid		Hydraulic oil according to DIN 51524 ... 535, other on request
Fluid temperature	[°C]	-20...+60 (NBR: -25...+60)
Viscosity permitted	[cSt]/[mm²/s]	20...400
Viscosity recommended	[cSt]/[mm²/s]	30...80
Filtration		ISO 4406 (1999); 18/16/13
Flow nominal at Δp=5 bar per control edge [3]	[l/min]	80
Flow maximum	[l/min]	250
Leakage at 100 bar	[ml/min]	<1800 (Zerolap spool); <1000 (Overlap spool)
Opening point	[%]	set to 9 commande signal (see flow characteristics)
Pilot supply pressure	[bar]	>5 higher than tank pressure (only internal pilot oil supply)
Static / Dynamic		
Step response at 100 % step [4]	[ms]	<7
Frequency response (±5 % signal) [4]	[Hz]	120 (amplitude ratio -3 dB), 120 (phase lag -90°)
Hysteresis	[%]	<0.05
Sensitivity	[%]	<0.03
Temperature drift	[%/K]	<0.025
Electrical characteristics		
Duty ratio	[%]	100
Protection class		IP65 in accordance with EN 60529 (with correctly mounted plug-in connector)
Supply voltage/ripple	[V]	DC 22 ... 30, electric shut-off at < 19, ripple < 5 % eff., surge free
Current consumption max.	[A]	3.5
Pre-fusing	[A]	4.0 medium lag
Input signal		
Code B Voltage	[V]	10...0...-10, ripple <0.01 % eff., surge free, 0...+10 V P->A
Code B Impedance	[kOhm]	100
Code E Current	[mA]	20...0...-20, ripple <0.01 % eff., surge free, 0...+20 mA P->A
Code E Impedance	[Ohm]	250
Code S Current	[mA]	4...12...20, ripple <0.01 % eff., surge free, 12...20 mA P->A <3.6 mA = disable, >3.8 mA = according to NAMUR NE43
Code S Impedance	[Ohm]	250
Differential input max.		
Code 0	[V]	30 for terminal D and E against PE (terminal G)
Code 5	[V]	30 for terminal 4 and 5 against PE (terminal ⏚)
Code 7	[V]	30 for terminal D and E against PE (terminal G)
Enable signal (only code 5/7)	[V]	5...30, Ri = 9 kOhm
Diagnostic signal	[V]	+10...0...-10 / +12.5 error detection, rated max. 5 mA
EMC		EN 61000-6-2, EN 61000-6-4
Electrical connection	Code 0/7 Code 5	6 + PE acc. EN 175201-804 11 + PE acc. EN 175201-804
Wiring min. Code 0/7	[mm²]	7 x 1.0 (AWG 18) overall braid shield
Wiring min. Code 5	[mm²]	8 x 1.0 (AWG 18) overall braid shield
Wiring length max.	[m]	50

[1] If valves with onboard electronics are used in safety-related parts of control systems, in case the safety function is requested, the valve electronics voltage supply is to be switched off by a suitable switching element with sufficient reliability.

[2] For applications with p_T>35 bar (max. 250 bar) the Y-port has to be connected and the plug in the Y-port has to be removed.

[3] Flow rate for different Δp per control edge: $Q_x = Q_{Nom.} \cdot \sqrt{\frac{\Delta p_x}{\Delta p_{Nom.}}}$

[4] Measured with load (100 bar pressure drop/two control edges).

D30FP UK.indd RH 17.04.2015

Flow curves
(Overlapped spool set to opening point 9 %)
at Δp = 5 bar per metering edge
Spool type **E01/02, E50**

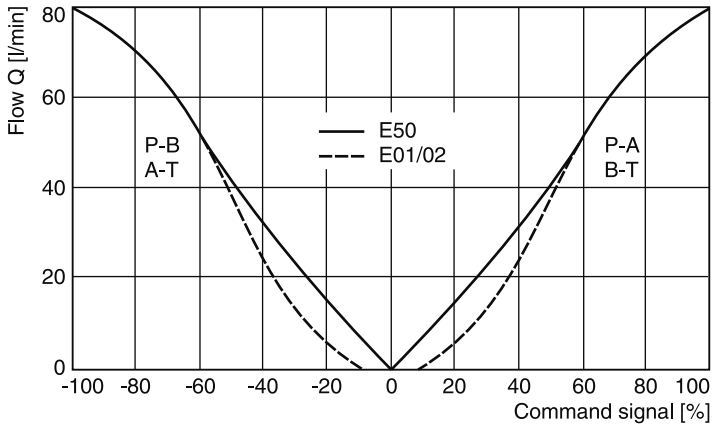

Pressure gain

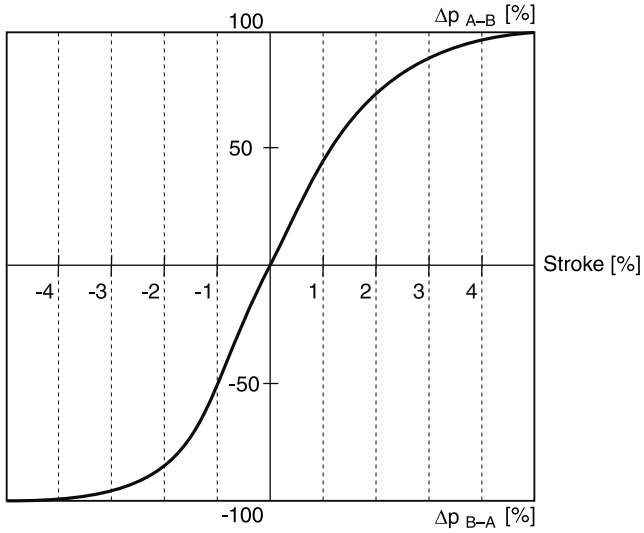

Frequency response
±5 % command signal
±25 % command signal

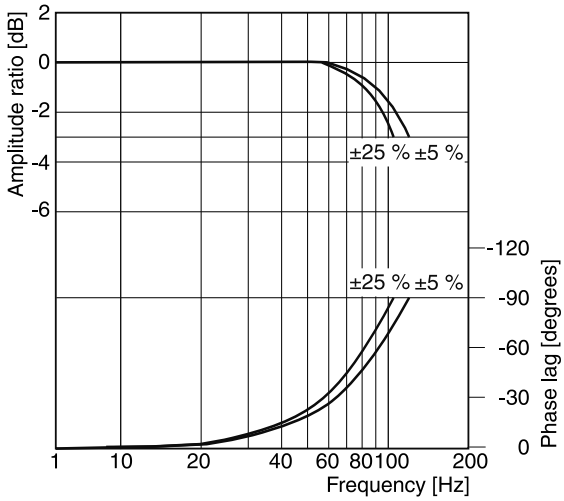

3

Code 0

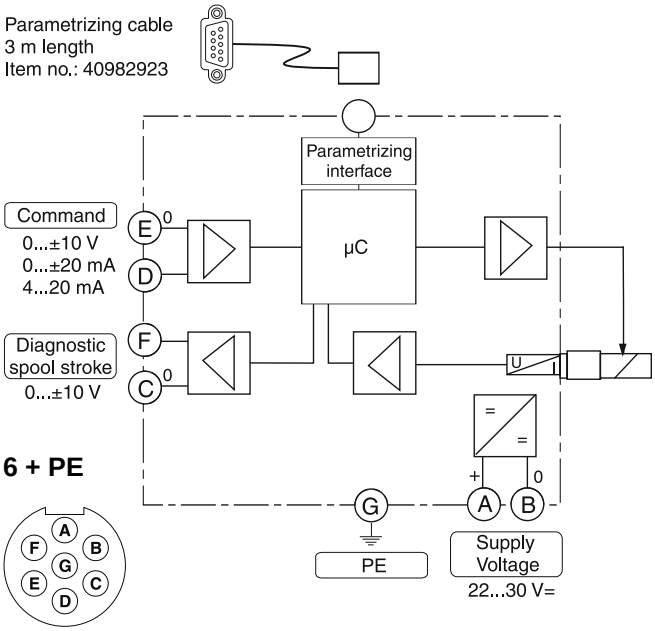

6 + PE

Code 5

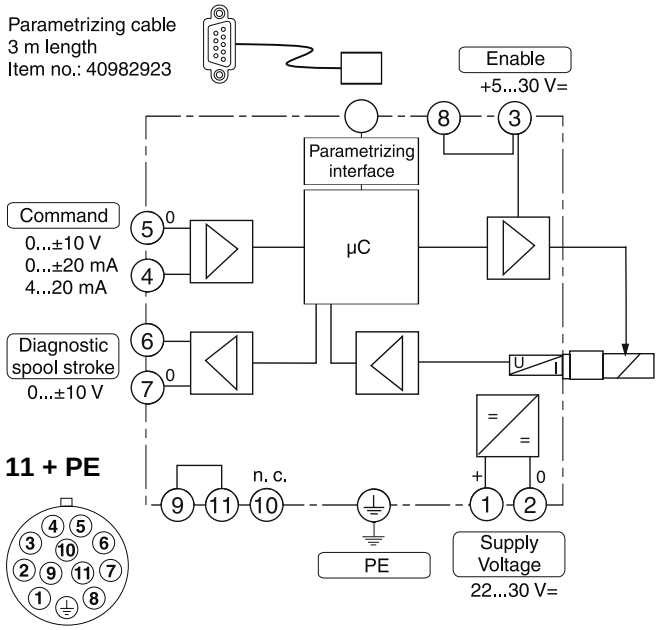

11 + PE

Code 7

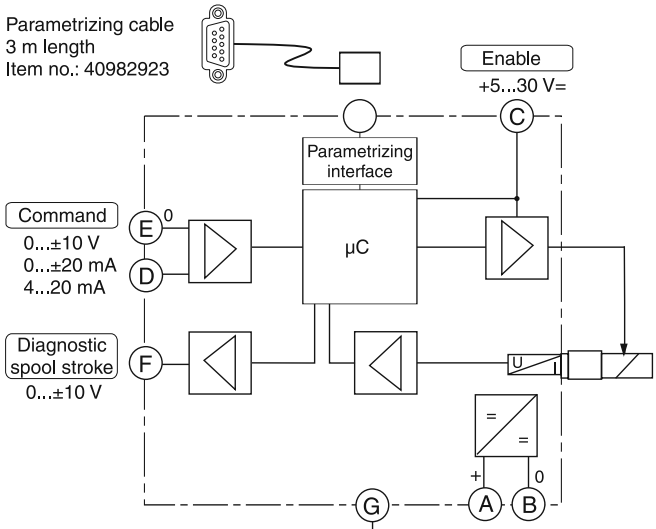

6 + PE + Enable

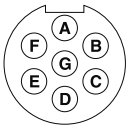

ProPxD interface program

The ProPxD software allows quick and easy setting of the digital valve electronics. Individual parameters as well as complete settings can be viewed, changed and saved via the comfortable user interface. Parameter sets saved in the non-volatile memory can be loaded to other valves of the same type or printed out for documentation purposes.

The PC software can be downloaded free of charge at www.parker.com/euro_hcd – see page “Support" or directly at www.parker.com/propxd.

Features

- Comfortable editing of valve parameters
- Saving and loading of customized parameter sets
- Executable with all Windows® operating systems from Windows® XP upwards
- Simple communication between PC and valve electronics via serial interface RS232C

The valve electronics cannot be connected to a PC with a standard USB cable – this can result in damages of PC and/or valve electronics.

The parametrizing cable may be ordered under item no. 40982923.

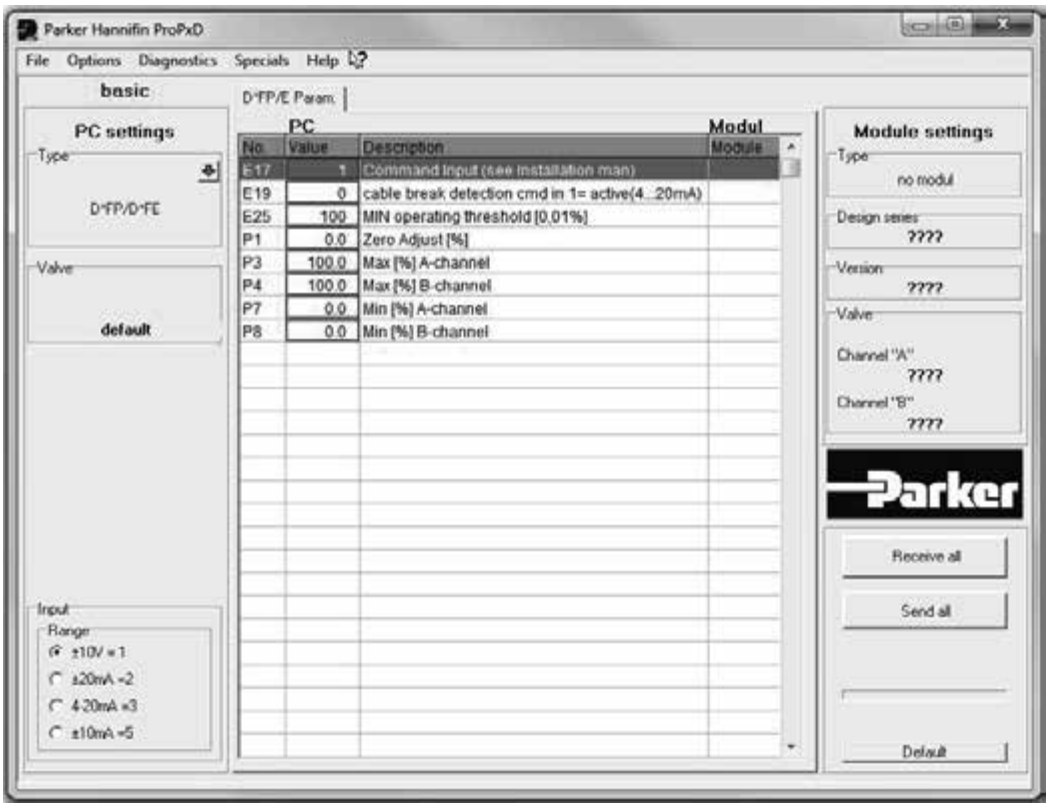

3

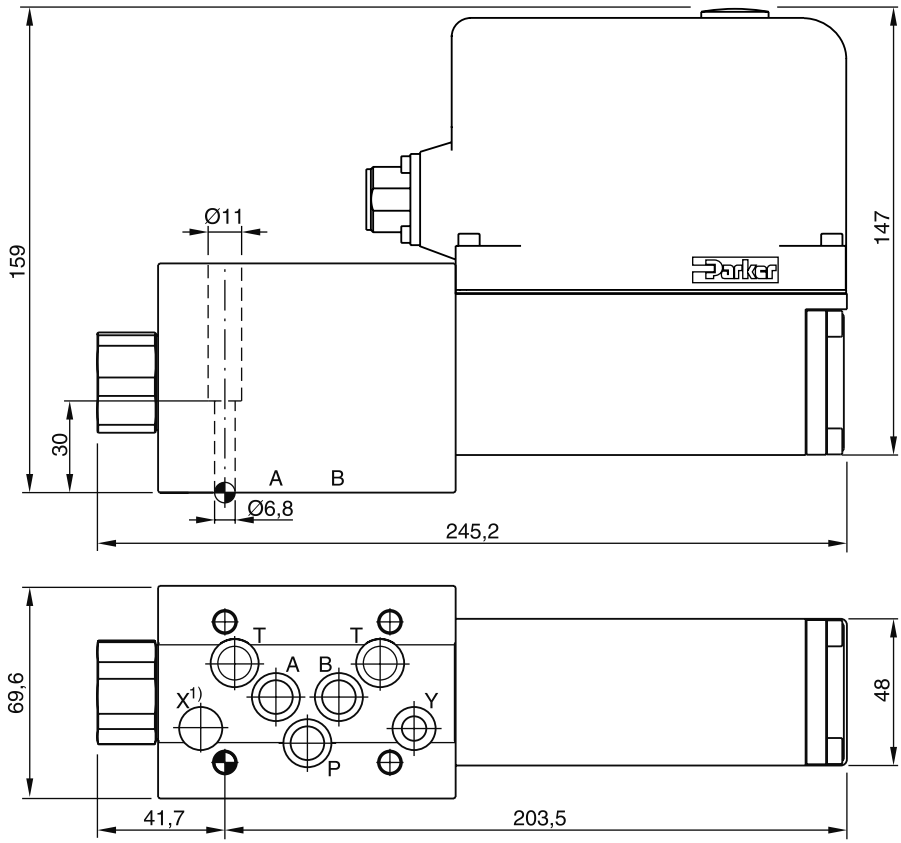

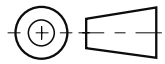

Surface finish	Kit			Kit
R_{max}6.3 ▱ 0.01/100	BK385	4xM6x40 ISO 4762-12.9	13.2 Nm ±15 %	NBR: SK-D3FP FPM: SK-D3FP-V HFC: SK-D3FP-H

1) O-ring recess diameter on valve body.

The series of pilot operated servo proportional valves D*1FP transfers the advantages of the Parker patented Voice Coil Drive (VCD®) to larger frame sizes and thus high flow rates. The high dynamics / high precision drive of the pilot valve allows the optimum control of the main spool and results in servo class performance of the complete valves.

The D*1FP series is available in 5 sizes:

D31FP NG10 (CETOP 05)
D41FP NG16 (CETOP 07)
D81FP NG25 (CETOP 08) for port diam. up to 26 mm
D91FP NG25 (CETOP 08) for port diam. up to 32 mm
D111FP NG32 (CETOP 10)

The safety concept works with a safe 4th position at the D1FP pilot valve. This ensures that the main stage is hydraulically balanced at power down and allows to have the main spool spring centered (for overlapped spools) or approximately 10 % spring offset to spool position A or B (for zerolap spools).

The innovative integrated regenerative function into the A-line (optional) allows new energy saving circuits for differential cylinders. The hybrid version can be switched between regenerative mode and standard mode at any time.

Features

- High dynamics
- High flow
- Defined spool positioning at power-down - optional P-A/B-T or P-B/A-T or center position (for overlapped spools)
- Onboard electronics
- Energy saving A-regeneration
- Switchable hybrid version

D41FP Standard

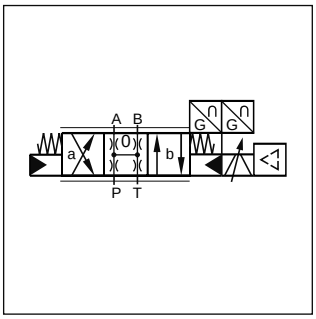

Standard D*1FPE

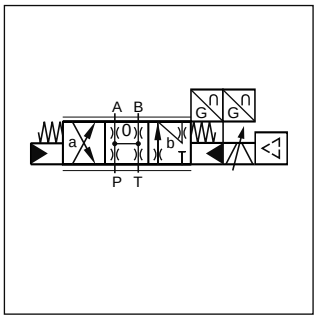

A-regeneration D*1FPR

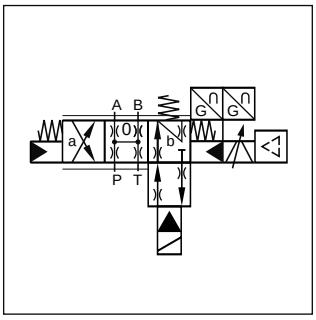

Hybrid D*1FPZ

Further literature about the opportunities of energy savings and more functional details of the integrated regeneration is available on request.

D41FPE52 (Standard)

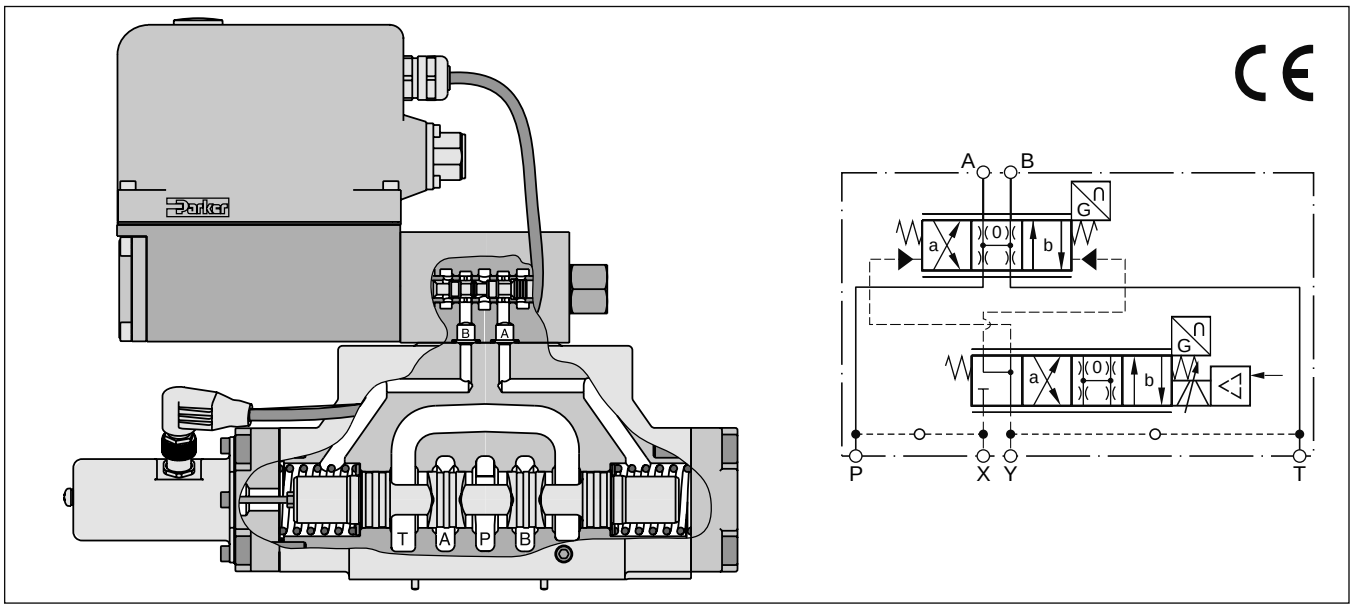

3

D*1FPR and D*1FPZ

Regenerative valve D*1FPR

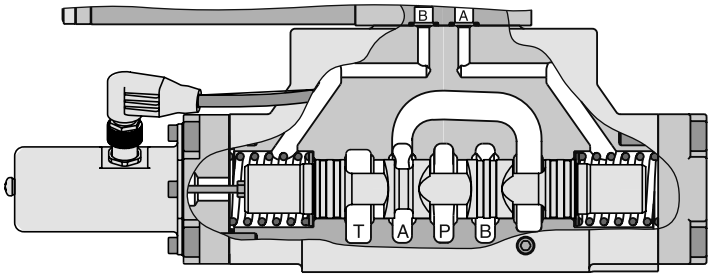

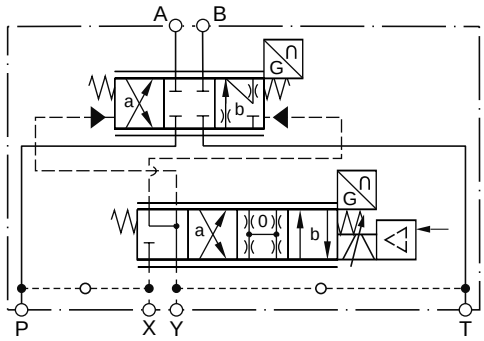

Hybrid valve D*1FPZ

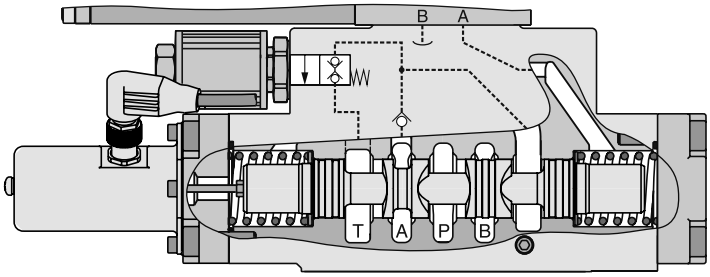

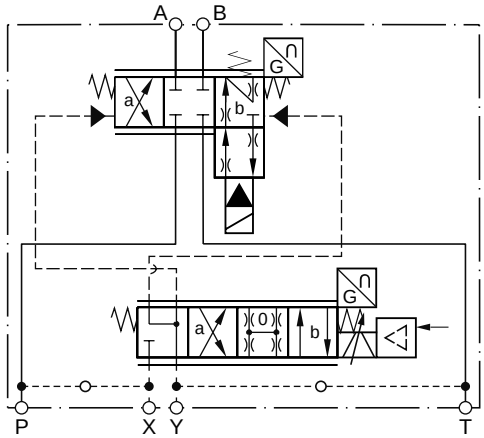

D*1FPR (regenerative valve)
Cylinder extending

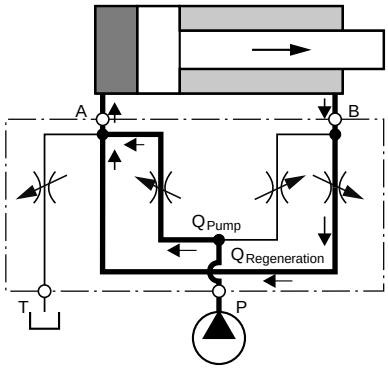

D*1FPZ (hybrid valve)
Cylinder extending
in regenerative mode (high speed)

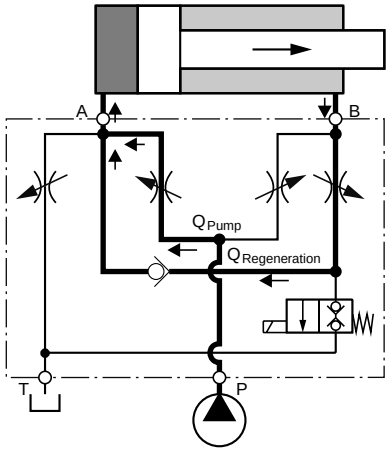

Cylinder extending
in standard mode (high force)

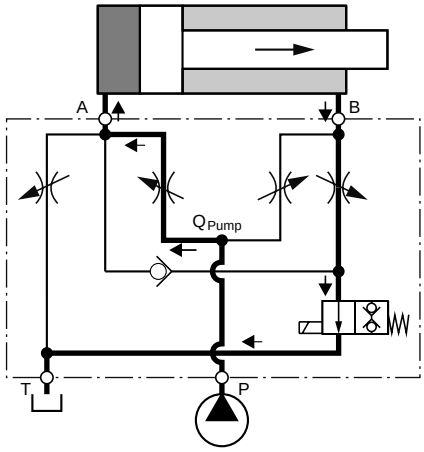

Flow rate in % of nominal flow

Size [1]	Spool	Port					
		A-T	P-A	P-B	B-A (R-Valve)	B-A (Hybrid)	B-T (Hybrid)
D41FPR/Z	31/32/61	100 %	50 %	100 %	50 %	40 %	20 %
D91FPR/Z	31/32/61	100 %	50 %	100 %	50 %	50 %	25 %
D111FPR/Z	31/32/61	100 %	50 %	100 %	50 %	50 %	20 %

[1] D31FP: For size NG10 please refer solution with sandwich- and adaptor plates "A10-1664 / A10-1665L / H10-1662 / H10-1666L" in chapter 12.

D		1	F	P									
Directional control valve	**Size**	**NG06 pilot**	**Propor-tional control**	**VCD perfor-mance**	**Function**	**Flow**	**Spool position on power down**	**Pilot connec-tions**	**Seals**	**Command signal**	**Electronic options**	**Valve option**	**Design series** (not required for ordering)

Code	Size
3	**NG10 / CETOP 05**
4	**NG16 / CETOP 07**
8	**NG25 / CETOP 08**
9 1)	**NG25 / CETOP 08**
11	**NG32 / CETOP 10**

Code	Valve option
0	**Standard for spool code B, E, R**
L 7)	**Hybrid valve 24 V normally closed for spool code Z**

Code	Electronic options
0	**6+PE acc. EN175201-804**
5	**11+PE acc. EN175201-804**
7	**6+PE + enable**

Standard		Regenerative function 4) 5)		Hybrid function 5) 6)	
Code	Spool type	Code	Spool type	Code	Spool type
overlap		overlap		overlap	
E01	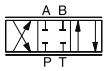	**R31**		**Z31**	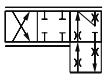
E02		**R32**	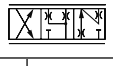	**Z32**	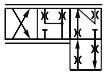
B31	$Q_B = Q_A/2$ 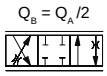				
B32	$Q_B = Q_A/2$				
zerolap		zerolap		zerolap	
E52	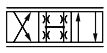	**R61**		**Z61**	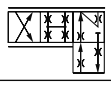
B61	$Q_B = Q_A/2$ 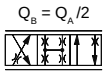				

Code	Signal	Function
B	**0...±10 V**	**0...+10 V P -> B**
E	**0...±20 mA**	**0...+20 mA P -> B**
K	**0...±10 V**	**0...+10 V P -> A**
S	**4...20 mA**	**12...20 mA P -> A**

Code	Seals
N	**NBR**
V	**FPM**
H	**for HFC fluid**

Code	Flow [l/min] at Δp = 5 bar per metering edge				
	D31	D41	D81	D91	D111
D	**90**	—	—	—	—
E	**120**	—	—	—	—
F	—	**200**	—	—	—
H	—	—	**400**	**450**	—
L	—	—	—	—	**1000**

Code	Inlet	Drain
1	**internal**	**external**
2	**external**	**external**
4	**internal**	**internal**
5	**external**	**internal**

Code	Spool pos. on power down
A 2)	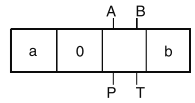
B 2)	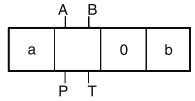
C 3)	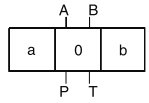

Please order connector separately. See chapter 3 accessories.
Parametrizing cable OBE -> RS232, item no. 40982923

1) For enlarged connections Ø 32 mm.
2) Approx. 10 % opening, only zero lapped spools.
3) For overlapped spools.
4) Not for D81FP.
5) For regenerative and hybrid function at D31FP (NG10) please refer to solutions with sandwich and adaptor plates "A10-1664 / A10-1665L / H10-1662 / H10-1666L" in chapter 12.

D31FP spooltype: R31 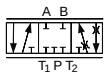 R32 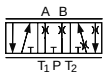 R61 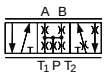

6) Not for valve D31FP and D81FP.
7) See page "Regenerative and hybrid function" (not for D31FP).

Short delivery time for all variations

D_1FP UK.indd RH 17.04.2015

3

General					
Design		Pilot operated servo proportional DC valve			
Actuation		VCD®-actuator			
Size		**NG10 (CETOP 05)**	**NG16 (CETOP 07)**	**NG25 (CETOP 08)**	**NG32 (CETOP 10)**
		D31	**D41**	**D81 / D91**	**D111**
Mounting Interface		DIN 24340 / ISO 4401 / CETOP RP121 / NFPA			
Mounting position		unrestricted			
Ambient temperature	[°C]	-20...+50			
$MTTF_D$ value [1]	[years]	75			
Weight	[kg]	11.3	14.2	23.5	64.5
Vibration resistance	[g]	10 Sinus 5...2000 Hz acc. IEC 68-2-6 30 Random noise 20...2000 Hz acc. IEC 68-2-36 15 Shock acc. IEC 68-2-27			
Hydraulic					
Max. operating pressure	[bar]	Internal pilot drain P, A, B, X 350; T, Y 35 External pilot drain P, A, B, T, X 350; Y 35			
Fluid		Hydraulic oil according to DIN 51524 ... 535, other on request			
Fluid temperature	[°C]	-20...+60 (NBR: -25...+60)			
Viscosity permitted	[cSt]/[mm²/s]	20...400			
Viscosity recommended	[cSt]/[mm²/s]	30...80			
Filtration		ISO 4406 (1999); 18/16/13			
Nominal flow at Δp = 5 bar per control edge [2]	[l/min]	120	200	400 / 450	1000
Max. recommended flow (standard)	[l/min]	250	600	1000	3000
Regenerative B-A / B-T		depending on application, see flow curves			
Leakage at 100 bar Overlapped spool	[ml/min]	200	200	600	1000
Leakage at 100 bar Zerolapped spool	[ml/min]	900	900	1000	5000
Leakage at 100 bar Pilot	[ml/min]	< 500			
Opening point	[%]	set to 10 command signal (see flow characteristics)			
Pilot supply pressure	[bar]	20...350			
Pilot flow during step response at 210 bar	[l/min]	10	12	24	40
Static / Dynamic					
Step response at 100 % stroke [3]	[ms]	10	13	19	45
Frequency response					
Amplitude ±5 % at 210 bar	[Hz]	128	95	95	40
Phase ±5 % at 210 bar	[Hz]	118	95	90	75
Hysteresis	[%]	< 0.1			
Sensitivity	[%]	< 0.05			
Temperature drift of center position	[%/K]	< 0.025			
Electrical					
Duty ratio	[%]	100			
Protection class		IP65 in accordance with EN 60529 (with correctly mounted plug-in connector)			
Supply voltage / ripple	[V]	22...30, ripple < 5 % eff., surge free			
Current consumption max.	[A]	3.5			
Pre-fusing	[A]	4.0 A medium lag			
Input signal Code K (B) Voltage	[V]	+10...0...-10, ripple < 0.01 % eff., surge free, 0...+10 V P–>A (P–>B)			
Input signal Code K (B) Impedance	[kOhm]	100			
Input signal Code E Voltage	[mA]	+20...0...-20, ripple < 0.01 % eff., surge free, 0...+20 mA P–>B			
Input signal Code E Impedance	[Ohm]	250			
Input signal Code S Current	[mA]	4...12...20, ripple < 0.01 % eff., surge free, 12...20 mA P–>A			
Input signal Code S Impedance	[Ohm]	250			
		< 3.6 mA = enable off, > 3.8 mA = enable on acc. NAMUR NE43			
Input Capacitance typ.	[nF]	1			
Differential input max. Code 0	[V]	30 for terminal D and E against PE (terminal G) 11 for terminal D and E against 0V (terminal B)			
Differential input max. Code 5	[V]	30 for terminal 4 and 5 against PE (terminal ⏚) 11 for terminal 4 and 5 against 0V (terminal 2)			
Differential input max. Code 7	[V]	30 for terminal D and E against PE (terminal G)			
Enable signal Code 5/7	[V]	5...30, Ri > 8 kOhm			
Diagnostic signal	[V]	+10...0...-10 / +12.5 V (overload), rated max. 5 mA			
EMC		EN 61000-6-2, EN 61000-6-4			
Electrical connection Code 0/7		6 + PE acc. EN 175201-804			
Electrical connection Code 5		11 + PE acc. EN 175201-804			
Wiring min. Code 0/7	[mm²]	7 x 1.0 (AWG16) overall braid shield			
Wiring min. Code 5	[mm²]	8 x 1.0 (AWG16) overall braid shield			
Wiring length max.	[m]	50			

[1] If valves with onboard electronics are used in safety-related parts of control systems, in case the safety function is requested, the valve electronics voltage supply is to be switched off by a suitable switching element with sufficient reliability.

[2] Flow rate for different Δp per control edge: $Q_x = Q_{Nom.} \cdot \sqrt{\frac{\Delta p_x}{\Delta p_{Nom.}}}$

[3] Measured with load (210 bar pressure drop/two control edges).

D_1FP UK.indd RH 17.04.2015

Electrical characteristics hybrid option

Duty ratio		100 %		
Protection class		IP 65 in accordance with EN 60529 (with correctly mounted plug-in connector)		
		D41	**D91**	**D111**
Supply voltage	[V]	24	24	24
Tolerance supply voltage	[%]	±10	±10	±10
Current consumption	[A]	1.21	0.96	1.29
Power consumption	[W]	29	23	31
Solenoid connection		Connector as per EN 175301-803		
Wiring min.	[mm²]	3 x 1.5 recommended		
Wiring length max.	[m]	50 recommended		

With electrical connections the protective conductor (PE ⏚) must be connected according to the relevant regulations.

3

Wiring

Code 0, 6 + PE acc. EN 175201-804

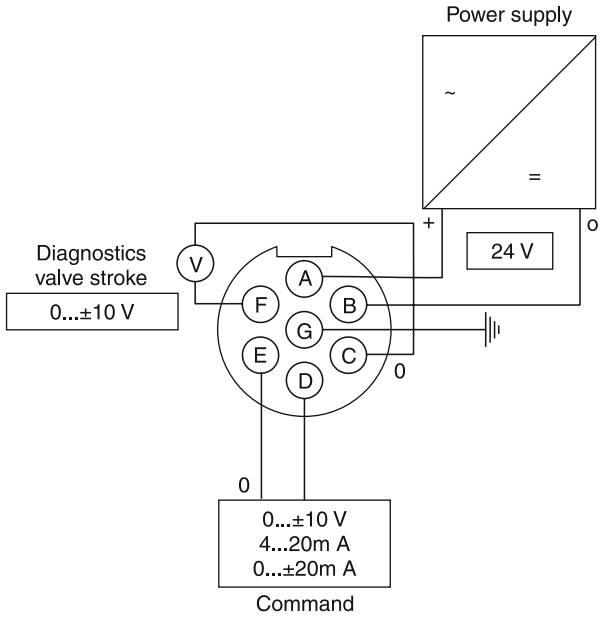

Code 5, 11 + PE acc. EN 175201-804

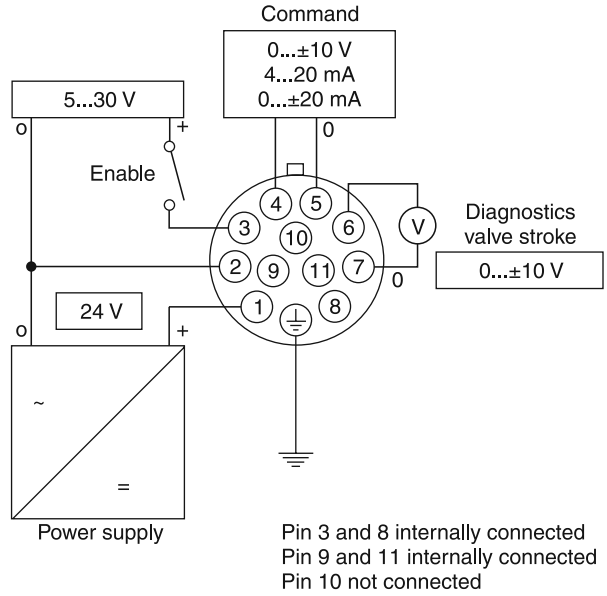

Code 7, 6 + PE acc. EN 175201-804 + enable

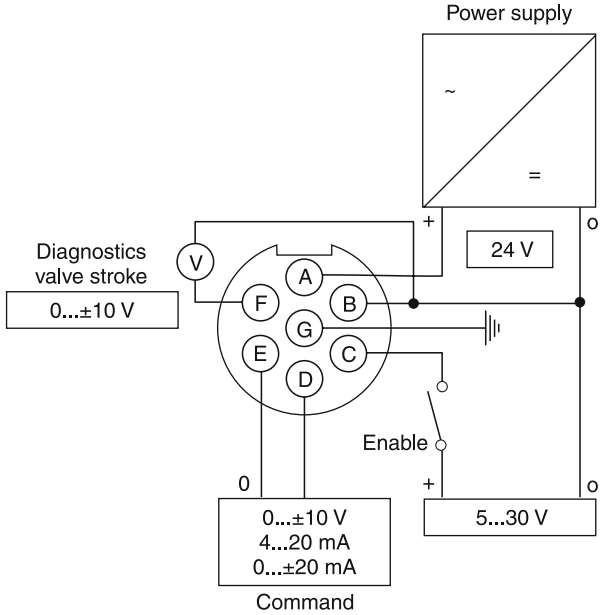

D_1FP UK.indd RH 17.04.2015

3

ProPxD interface program

The ProPxD software allows quick and easy setting of the digital valve electronics. Individual parameters as well as complete settings can be viewed, changed and saved via the comfortable user interface. Parameter sets saved in the non-volatile memory can be loaded to other valves of the same type or printed out for documentation purposes.

The PC software can be downloaded free of charge at www.parker.com/euro_hcd – see page “Support" or directly at www.parker.com/propxd.

Features

- Comfortable editing of valve parameters
- Saving and loading of customized parameter sets
- Executable with all Windows® operating systems from Windows® XP upwards
- Simple communication between PC and valve electronics via serial interface RS232C

The valve electronics cannot be connected to a PC with a standard USB cable – this can result in damages of PC and/or valve electronics.

The parametrizing cable may be ordered under item no. 40982923.

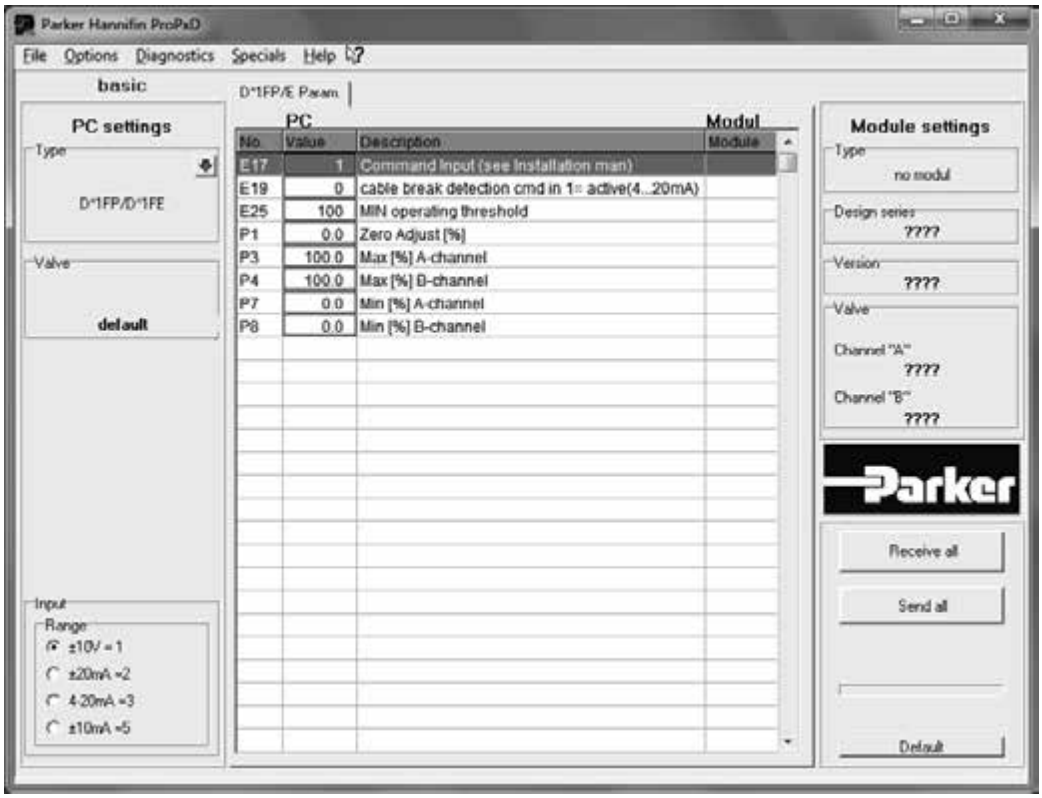

Frequency response

±5 % / ±25 % / ±90 % command signal
Dynamics at 210 bar pilot supply pressure

D31FP

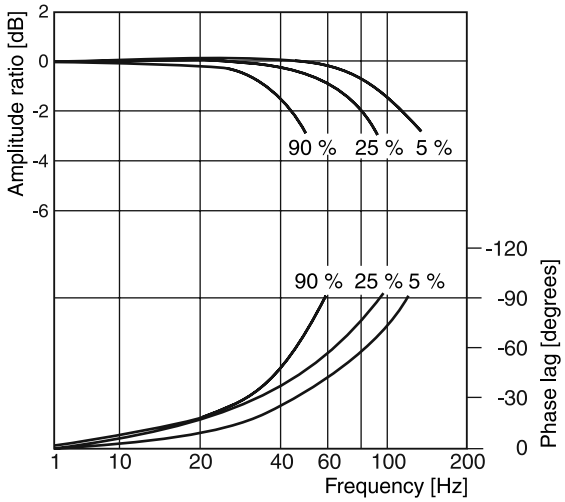

D41FP

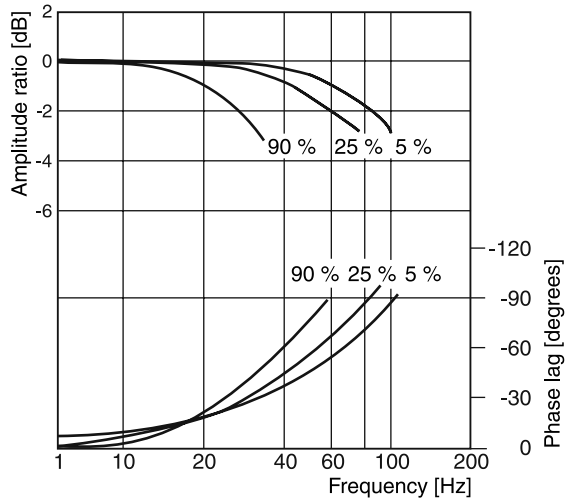

D81/91FP

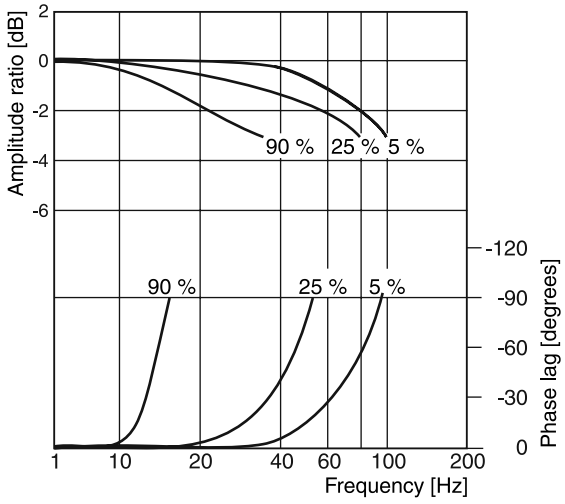

D111FP

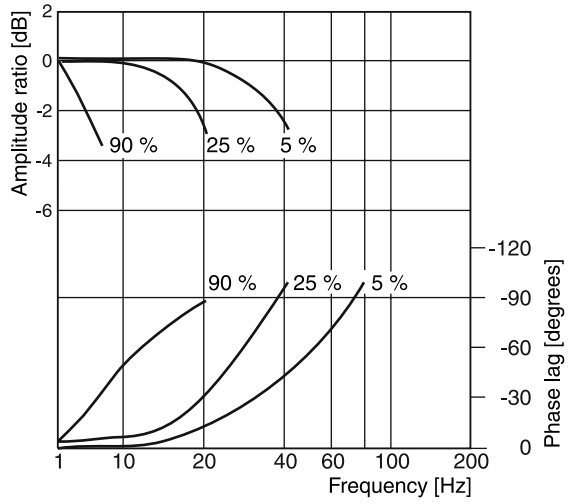

Flow curves D*1FPB/E

(Overlapped spool set to opening point 10 %)
at Δp = 5 bar per metering edge

D31FP

spool type E01/02/52, B31/32/61

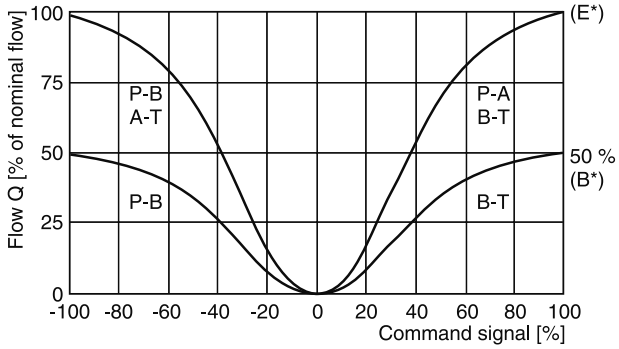

D41FP

spool type E01/02/52, B31/32/61

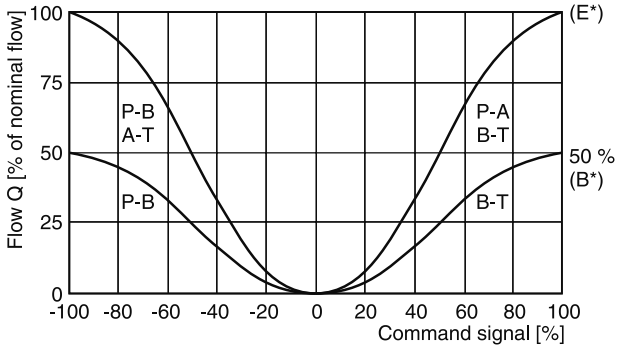

All characteristic curves measured with HLP46 at 50 °C.

D_1FP UK.indd RH 17.04.2015

3

Flow curves

D81/91FP
Spool type E01/02/52, B31/32/61

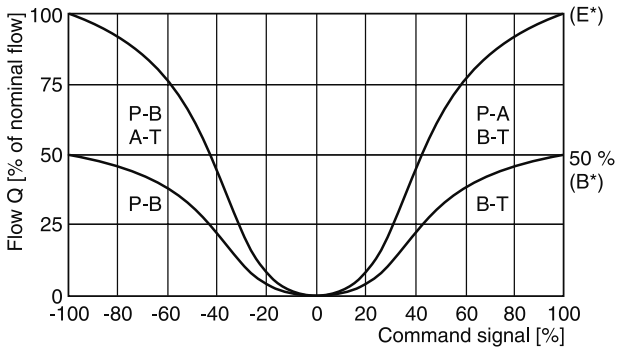

D111FP
Spool type E01/02/52, B31/32/61

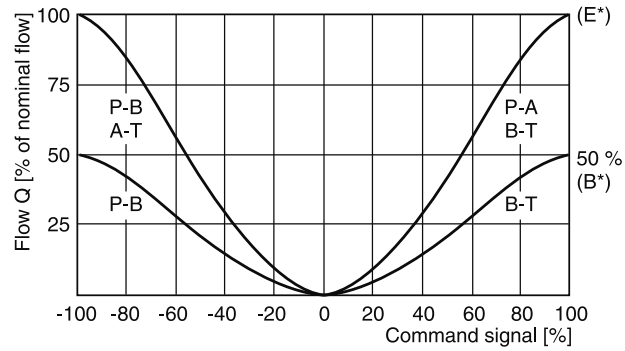

Flow curves D*1FPR/Z
(Overlapped spool set to opening point 10 %)
at Δp = 5 bar per metering edge

D31FP
Spool type R31/32/61

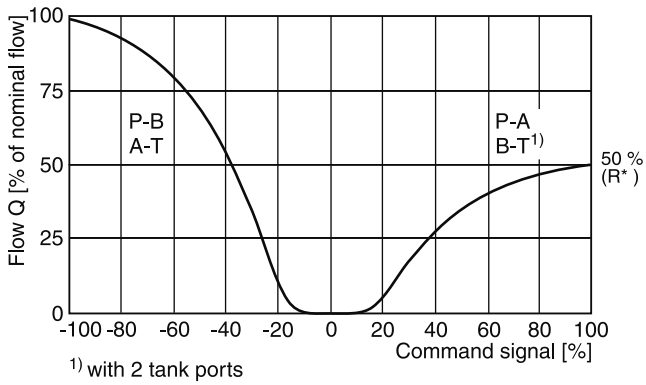

1) with 2 tank ports

D41FP
Spool type R/Z 31/32/61

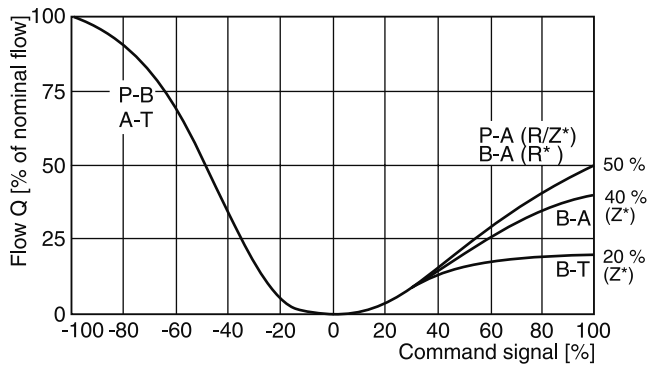

D91FP spool type R/Z 31/32/61

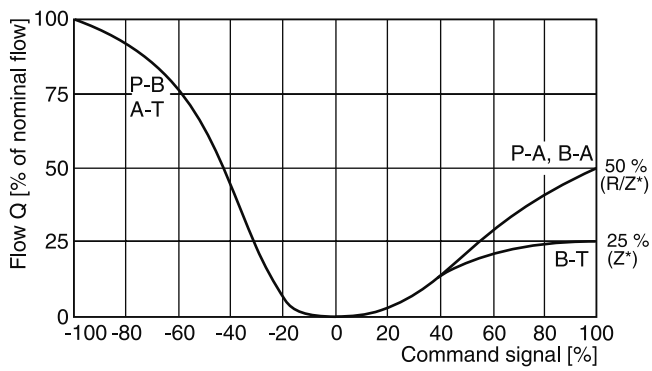

D111FP
spool type R/Z* on request

Detail:
Standard, regenerative and hybrid flow curves

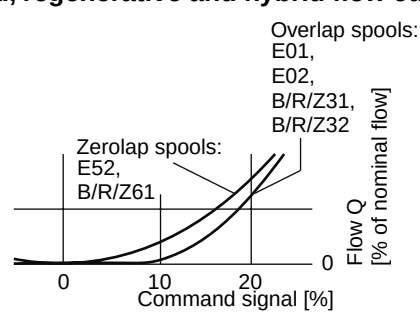

Pilot oil inlet (supply) and outlet (drain)

○ **open,** ● **closed**

Pilot oil Inlet	Pilot oil Drain	B	C
internal	external	○	●
external	external	●	●
internal	internal	○	○
external	internal	●	○

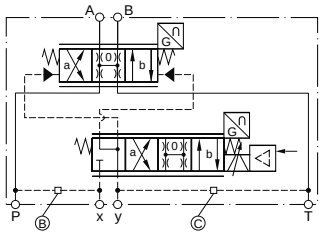

D31FPB/E

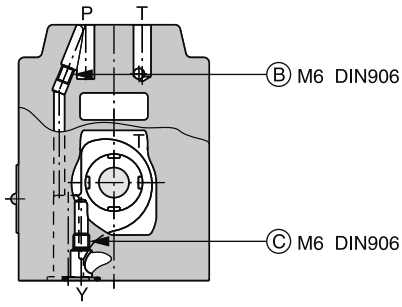

(drawn offset)

D31FPR

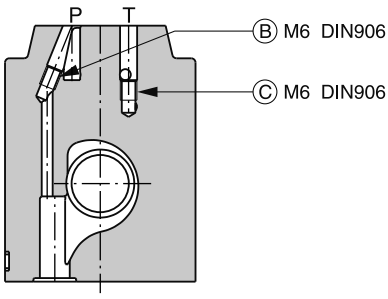

D41FPB/E

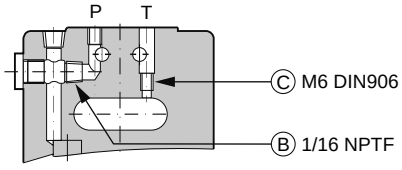

D41FPR

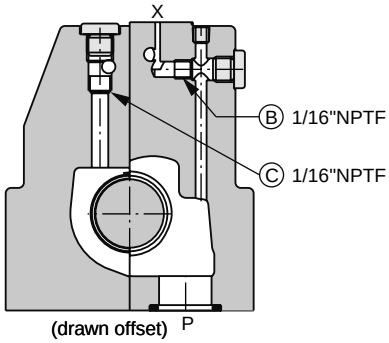

(drawn offset)

D41FPZ

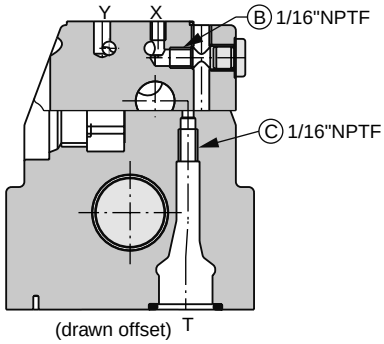

(drawn offset)

D91FPB/E

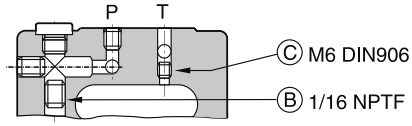

D91FPR

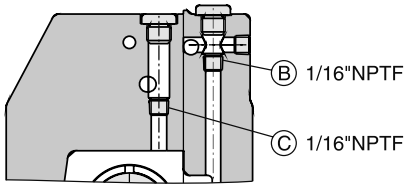

(drawn offset)

D91FPZ

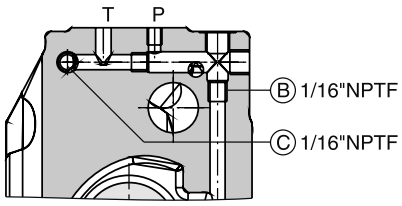

D111FPB/E

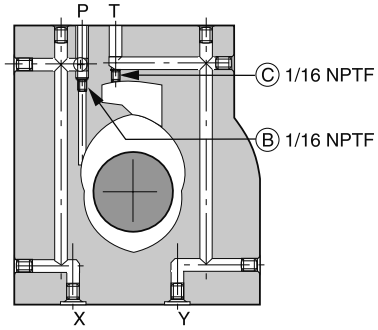

D111FPR

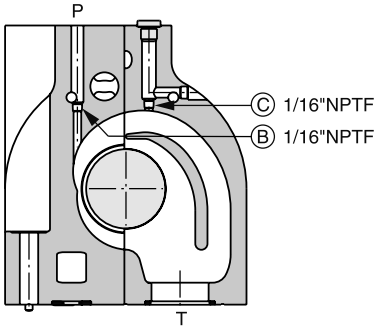

(drawn offset)

D111FPZ

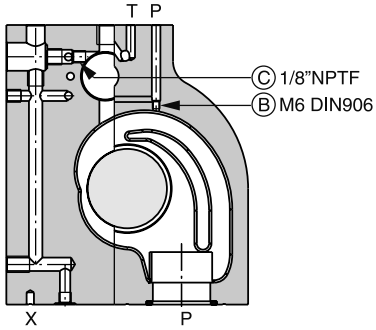

(drawn offset)

3

D31FP

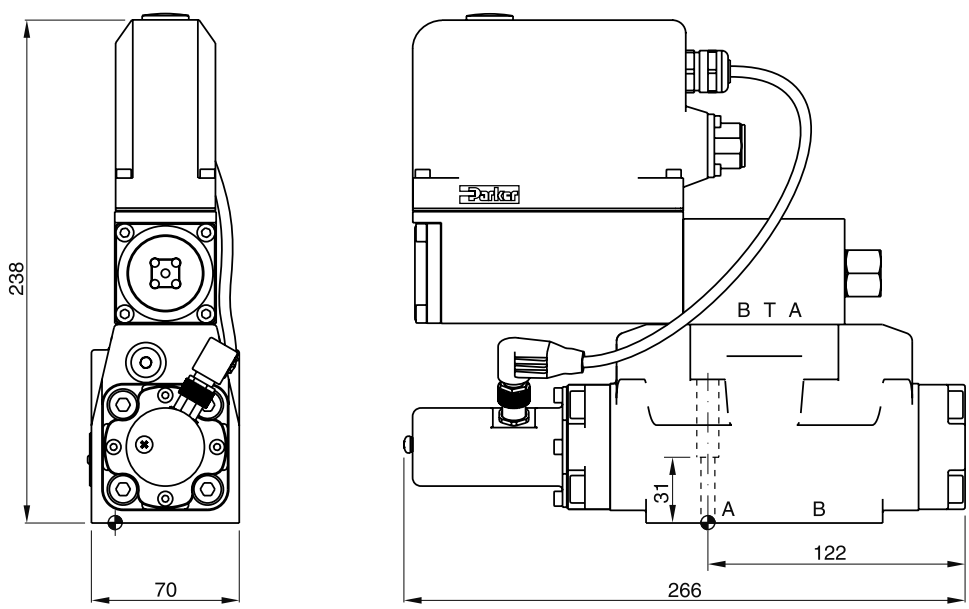

Regenerative and hybrid function with additional plate "A10-1664 / A10-1665L / H10-1662 / H10-1666L", see chapter 12.

Surface finish	Kit			Kit
R_{max}6.3 ▱ 0.01/100	BK385	4x M6x40 ISO 4762-12.9	13.2 Nm ±15 %	NBR: SK-D31FP FPM: SK-D31FP-V

D41FP

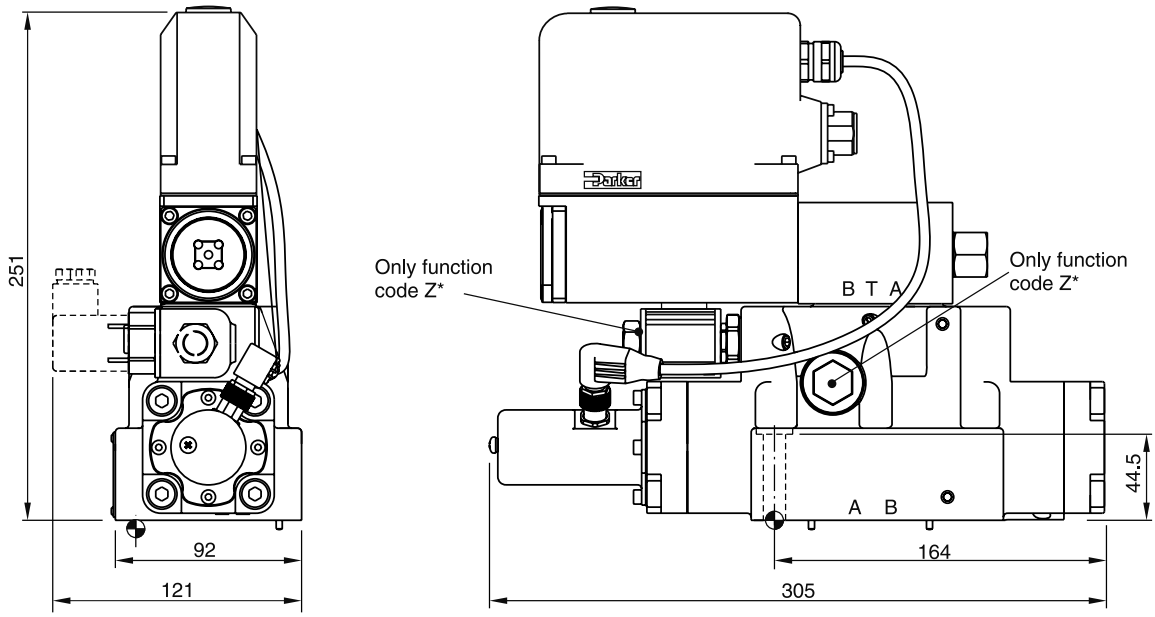

Surface finish	Kit			Kit
R_{max}6.3 ▱ 0.01/100	BK320	2x M6x55 4x M10x60 ISO 4762-12.9	13.2 Nm ±15 % 63 Nm ±15 %	NBR: SK-D41FP FPM: SK-D41FP-V

D81/91FP

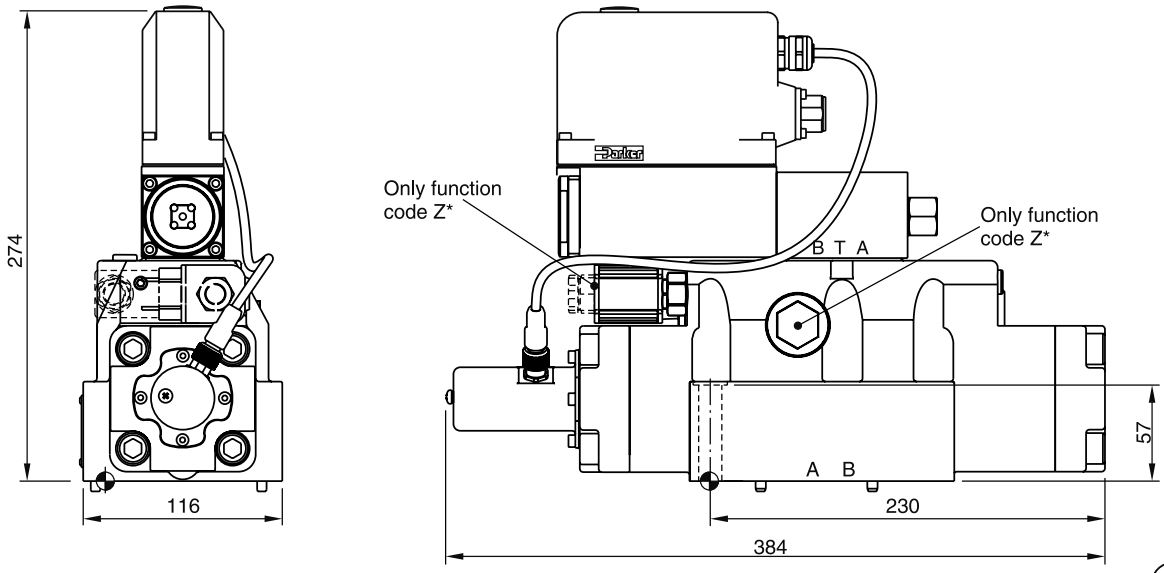

Surface finish	Kit			Kit
R_{max}6.3 ▱ 0.01/100	BK360	6x M12x75 ISO 4762-12.9	108 Nm ±15 %	NBR: SK-D81/D91FP FPM: SK-D81/D91FP-V

D111FP

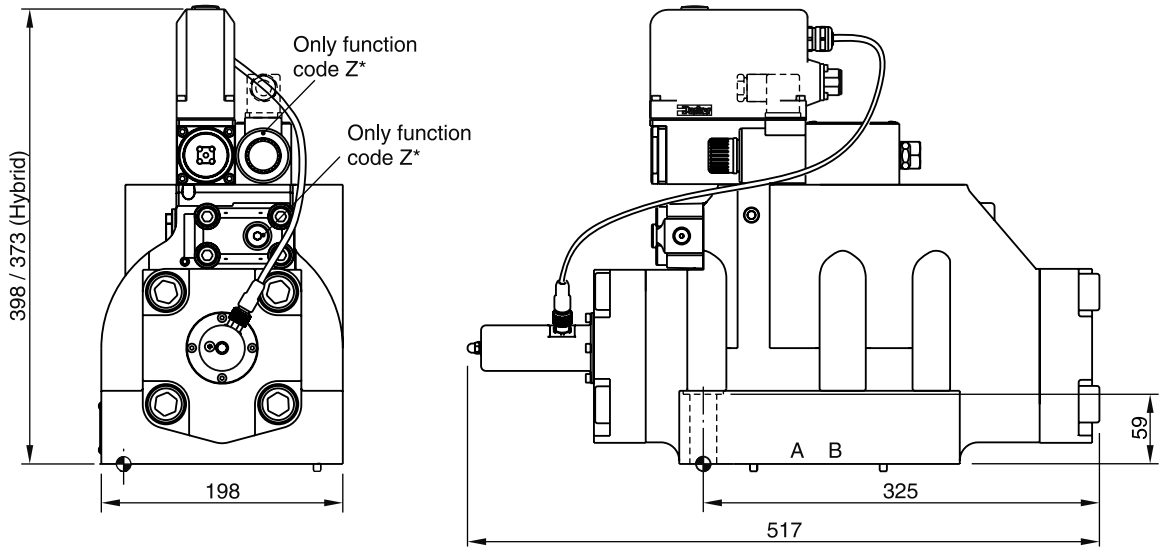

Surface finish	Kit			Kit
R_{max}6.3 ▱ 0.01/100	BK386	6x M20x90 ISO 4762-12.9	517 Nm ±15 %	NBR: SK-D111FP FPM: SK-D111FP-V

D_1FP UK.indd RH 17.04.2015

3

Introduction

DFplus valves with EtherCAT interface fulfill the requirements of modern communication between valve and main control. Due to high data transmission speed and short cycle times, the high dynamics of the DFplus valves can be also utilized within the fieldbus system.

The valve is actuated and monitored by the EtherCAT interface. Actual value (spool position), temperature, operating hours and different error messages are available as diagnostic signals. The valve parameters are factory set and can be adapted with the Parker ProPxD software via the parametrizing interface.

In addition to the fieldbus communication, the valves provide the range of functions of the standard version including analogue command signal and diagnostic spare stroke. Thus they can be operated independent of the fieldbus control, particularly during commissioning and maintenance.

D1FP with EtherCAT

The option with EtherCAT is available for the series:

- D1FP, D3FP
- D30FP
- D31FP, D41FP, D81FP, D91FP, D111FP

as well as for cartridge valves TDP, TEP and TPQ in chapter 8.

Features EtherCAT interface

- EtherCAT interface, 2x M12x1, connector 4-Pin (EtherCAT In and EtherCAT Out)
- High dynamics
- High flow capacity
- Onboard electronics

Technical Data

Electrical			
Duty ratio		[%]	100
Protection class			IP65 in accordance with EN 60529 (with correctly mounted plug-in connector)
Supply voltage/ripple		[V]	22 ... 30, electric shut-off at < 19, ripple < 5 % eff., surge free
Current consumption max.		[A]	3.5
Pre fusing		[A]	4.0 medium lag
Differential input		[V]	30 for terminal D and E against PE (terminal G)
Diagnostic signal		[V]	+10...0...-10 / +12.5 error detection, rated max. 5 mA
EMC			EN 61000-6-2, EN 61000-6-4
Electrical connection			6 + PE acc. to EN 175201-804
EtherCAT interface			2 x socket M12x1: 5p acc. to IEC61076-2-101
Wiring min.		[mm²]	3 x 1.0 (AWG16) overall braid shield
Wiring length max.		[m]	50
Wiring EtherCAT			acc. to CiA DS-301 Version 4 / Twisted pair cable acc. to ISO11898
EtherCAT profiles			Communication Layer IEC 61158-x-12, 301 Version 4 Device Profile in accordance with CIA DS - 408 Version 1.5.2 CANopen over EtherCAT (object dictionary)
Functionality			One PDO (Receive) One PDO (Transmit) BUS-cycle time down to 0.250 mSec.
Parameterization			
Interface			RS 232, parametrizing cable order code 40982923
Interface program			ProPxD (see www.parker.com/propxd)
Adjustment ranges	Min	[%]	0...50
	Max	[%]	50...100
	Ramp	[%]	0...32.5

The EtherCAT option is also available for the cartridge valves in chapter 8, series TDP, TEP and TPQ

Direct operated proportional DC valve

D		F	P			9		N00	
Directional control valve	Size	Proportional control	VCD	Spool type	Spool position on power down	Y-port (plugged)	Seals	EtherCAT interface	Design series (not required for ordering)

Code	Size
1	NG06 / CETOP 03
3	NG10 / CETOP 05

See ordering code for valve series without EtherCAT

Pilot operated proportional DC valve

D	30	F	P					N00	
Direct. control valve	Size	Proportional control	VCD	Spool type	Spool position on power down	Pilot connection	Seals	EtherCAT interface	Design series (not required for ordering)

Code	Size
30	NG10 / CETOP 05

See ordering code for valve series without EtherCAT

Pilot operated proportional DC valve

D		1	F	P						N00	
Direct. control valve	Size	NG06 pilot valve	Proportional control	VCD	Function	Flow	Spool position on power down	Pilot connection	Seals	EtherCAT interface	Design series (not required for ordering)

Code	Nenngröße
3	NG10 / CETOP 05
4	NG16 / CETOP 07
8	NG25 / CETOP 08
9	NG25 / CETOP 08
11	NG32 / CETOP 10

See ordering code for valve series without EtherCAT

Please order connector separately, see chapter 3 accessories.
Parametrizing cable OBE → RS232, item no. 40982923

D_FP EtherCAT UK.indd RH 17.04.2015

3

Block diagram code N00

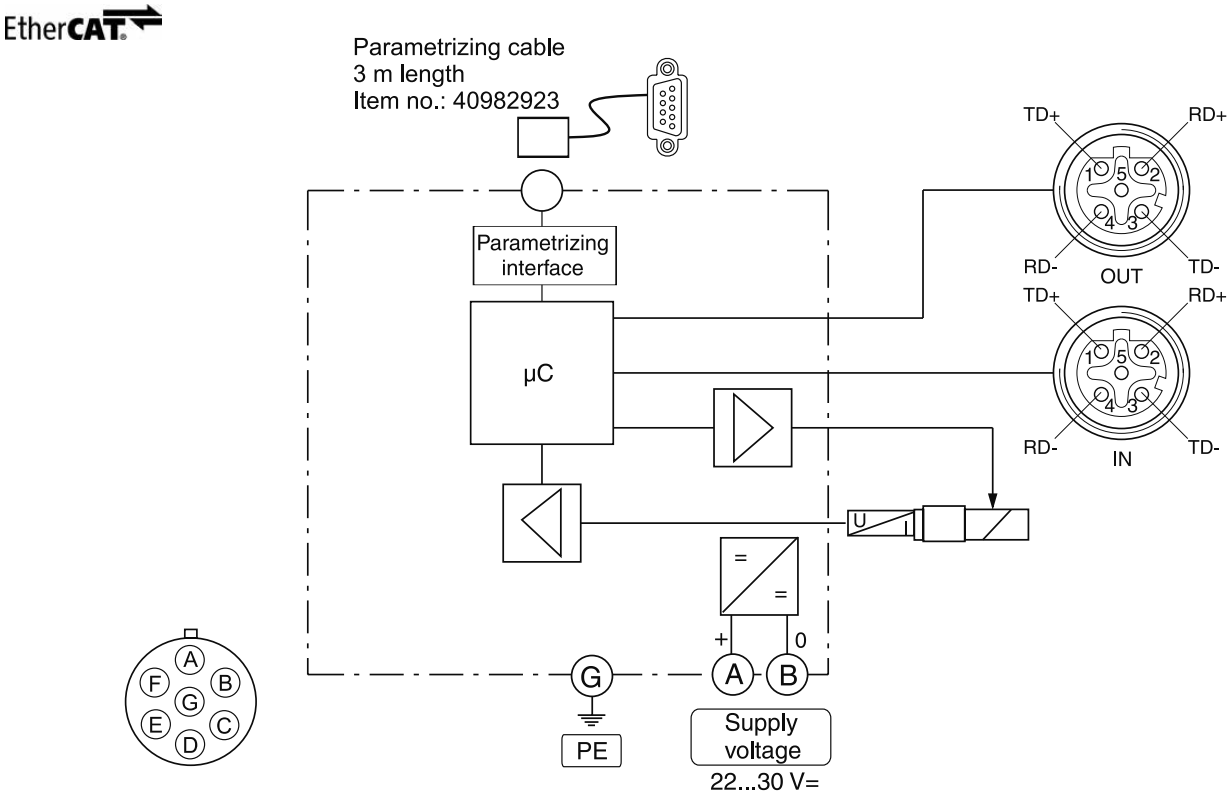

Dimensions D1FP with EtherCAT

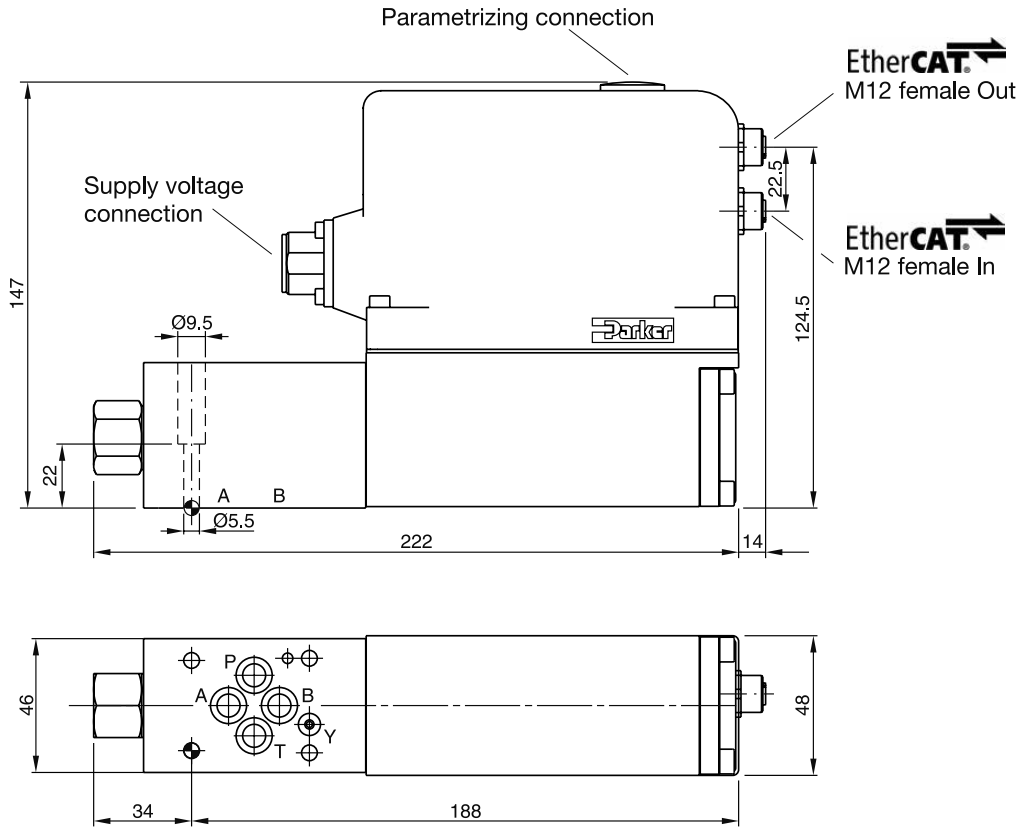

D_FP EtherCAT UK.indd RH 17.04.2015

Solenoid connector
D*FB, D*1FB, D1FV

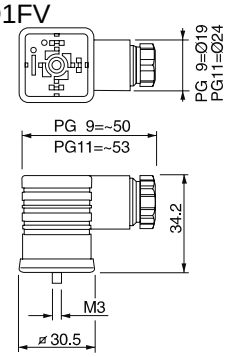

Description	Variation	Order no.
EN 175301-803 2+PE	PG 9 black B	5001710
EN 175301-803 2+PE	PG 9 grey A	5001711
EN 175301-803 2+PE	PG 11 black B	5001716
EN 175301-803 2+PE	PG 11 grey A	5001717

3

Plug kit DT04-2P “Deutsch“
D1FB, D*1FB, D1FV

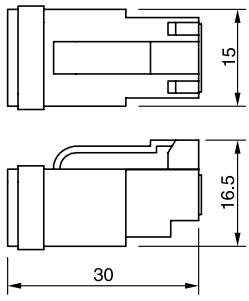

Description	Order no.
Connector DT04-2P “Deutsch“	45216087

Monitor switch connector
D*1FB, D*1FC

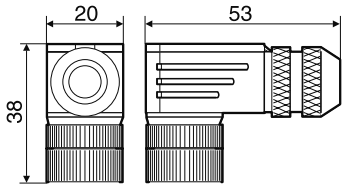

Description	Order no.
IEC 61076-2-101 M12 / 4 + PE	5004109

Central connector
D*FB*0 OBE, D*1FB*0 OBE, D1FV*0 OBE, D*FC*0, D*1FC*0/7, D*FP*0/7, D*1FP*0/7

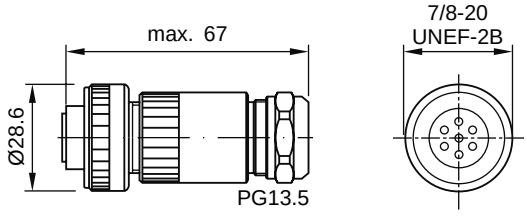

Description	Order no.
EN 175201-804 6 + PE	5004072

Central connector
D*FB*5 OBE, D*1FB*5 OBE, D1FV*5 OBE, D*FC*5, D*FP*5, D*1FP*5

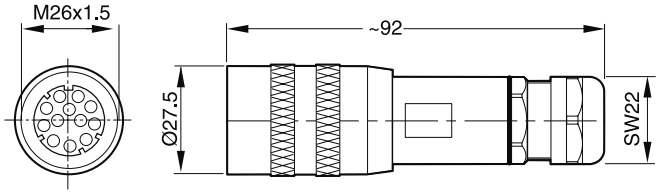

Description	Order no.
EN 175201-804 11 + PE	5004711

Access03.INDD RH 17.04.2015

3

Solenoid kit
A solenoid kit contains tube, coil, retainer and seals for the solenoid.

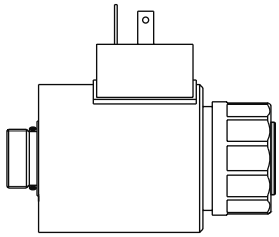

Coil kit
A coil kit contains coil, retainer and seals for the coil.

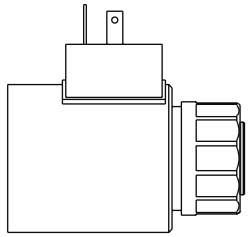

D1FB

Solenoid kits: D1FBS...		(Example: AK-D1FBSJW014)		
Voltage	**Voltage code**	**Connector as per EN 175301-803**	**Design**	**Design series**
9 V / 2.7 A	M	W	0	14
12 V / 2.2 A	K	W	3	14
24 V / 0.8 A	J	W	0	14
24 V / 1.1 A	J	W	3	14

Coil kits: D1FBC...		(Example: AK-D1FBCJW313)		
Voltage	**Voltage code**	**Connector as per EN 175301-803**	**Design**	**Design series**
9 V / 2.7 A	M	W	0	14
12 V / 2.2 A	K	W	3	10
24 V / 0.8 A	J	W	0	14
24 V / 1.1 A	J	W	3	13

D3FB

Solenoid kits: D3FBS...		(Example: AK-D3FBSKW12)	
Voltage	**Voltage code**	**Connector as per EN 175301-803**	**Design series**
12 V / 2.95 A	K	W	12
24 V / 1.5 A	J	W	12

Coil kits: D3FBC...		(Example: AK-D3FBCKW12)	
Voltage	**Voltage code**	**Connector as per EN 175301-803**	**Design series**
12 V / 2.95 A	K	W	12
24 V / 1.5 A	J	W	12

Size 6, mounting pattern to ISO 4401-03-03-0-05

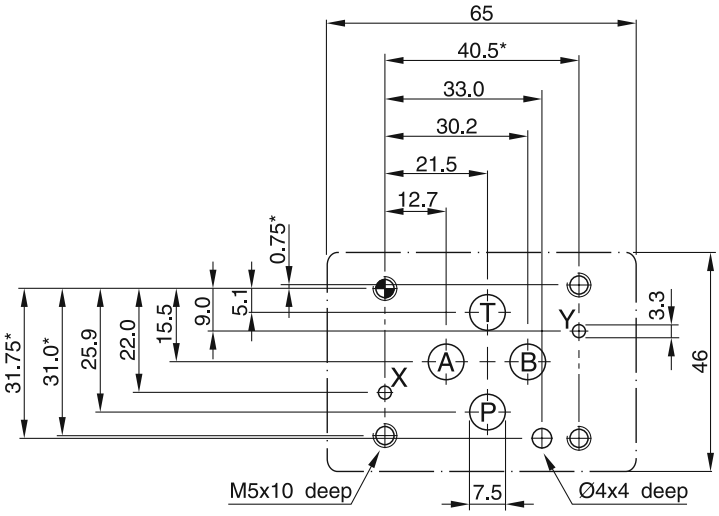

Size 10, mounting pattern to ISO 4401-05-05-0-05

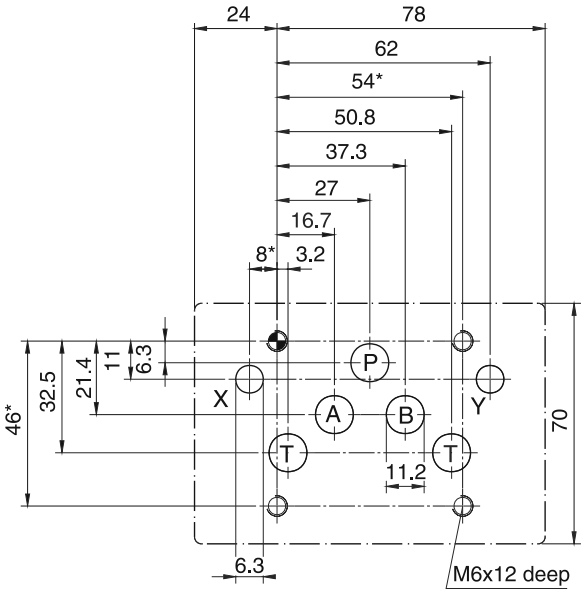

Deviating from ISO 4401
these diameters are possible:
X, Y = Ø 8 max.

Size 16, mounting pattern to ISO 4401-07-07-0-05

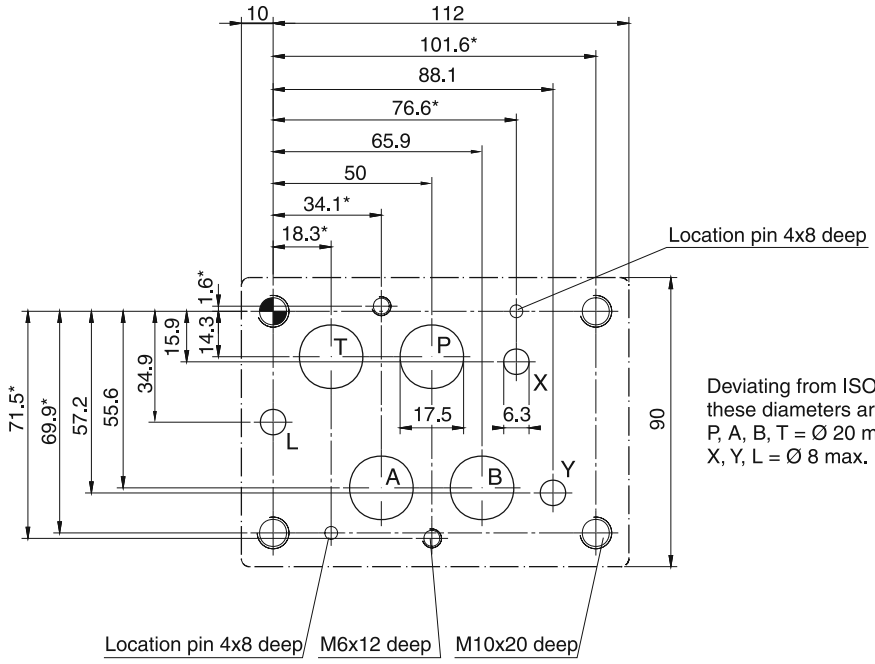

Deviating from ISO 4401
these diameters are possible:
P, A, B, T = Ø 20 max.
X, Y, L = Ø 8 max.

With * marked dimensions ± 0.1mm. All other dimensions ± 0.2mm.
Subplates and manifolds see chapter 12.

Access03.INDD RH 17.04.2015

3

Size 25, mounting pattern to ISO 4401-08-08-0-05

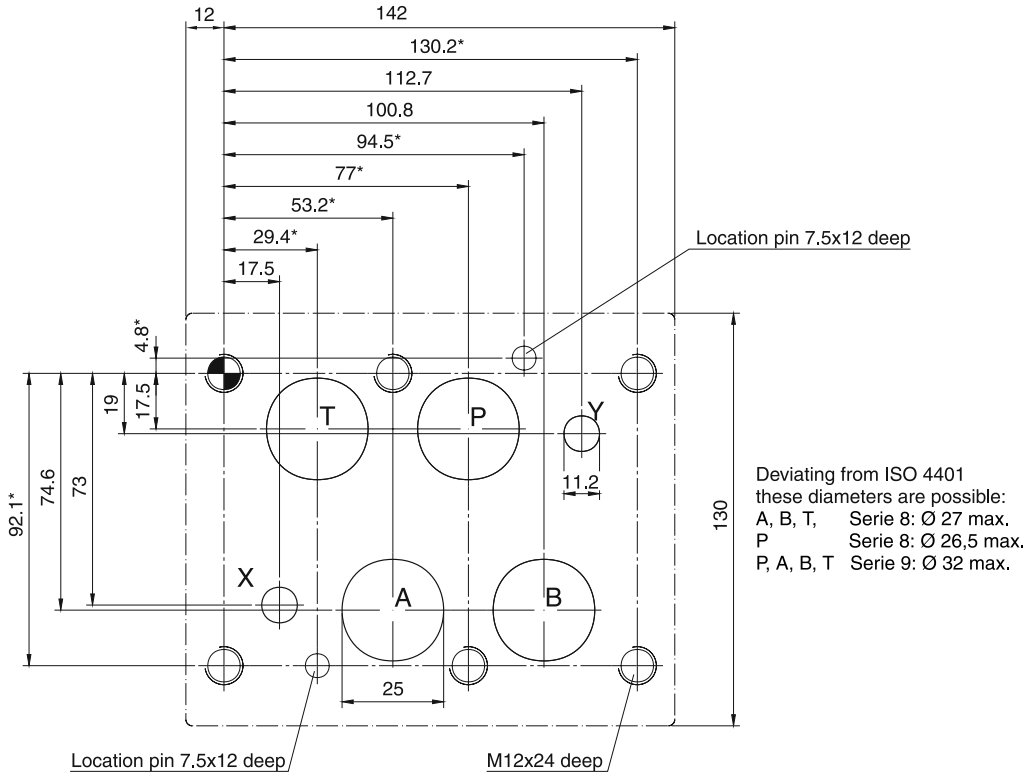

Size 32, mounting pattern to ISO 4401-10-09-0-05

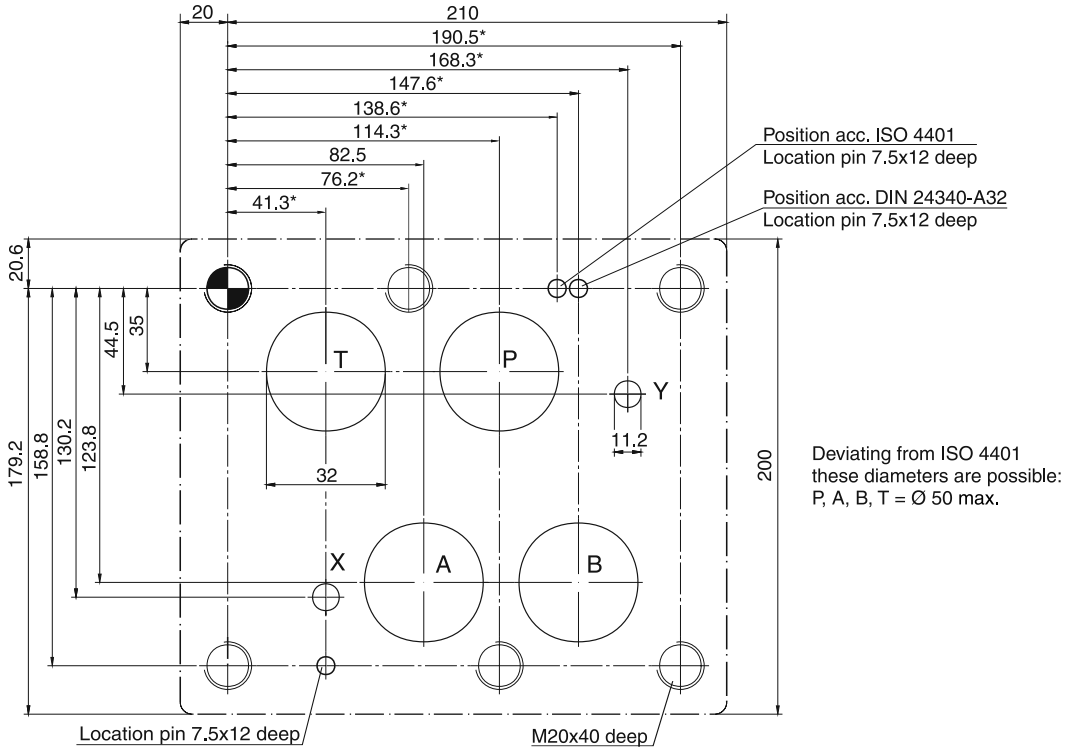

With * marked dimensions ± 0.1mm. All other dimensions ± 0.2mm.
Subplates and manifolds see chapter 12.

Access03.INDD RH 17.04.2015

Series	Description	Size						Mounting			Operation		Page
	Parker Standard	06	10					Subplate	Panel	Screw-in	Direct	Pilot	
	DIN / ISO			06	10	25	32						
	Pressure relief valves, manual operation												
VS				•				•			•		4-2
VB				•	•			•			•		4-5
VBY				•	•			•				•	4-10
EVSA		•	•							•	•		4-15
R1E02	Remote control valve	•						•	•		•		4-18
R4V/R6V					•	•	•	•				•	4-21
R4V/R6V	According to directive 97/23/EG (TÜV)				•	•	•	•				•	4-30
	Pressure relief valves, proportional operation												
RE06M*W				•				•			•		4-39
RE06M*T				•				•			•		4-43
R4V/R6V					•	•	•	•				•	4-49
R4V/R6V	Onboard electronics				•	•	•	•				•	4-55
VBY*K				•	•			•				•	4-63
	Unloading and sequence valves, manual operation												
R4U					•	•	•	•				•	4-69
R4S					•	•	•	•				•	4-75
	Pressure reducing valves, manual operation												
VM				•	•			•			•		4-78
R4R					•	•	•	•				•	4-83
	Pressure reducing valves, proportional operation												
VMY				•	•			•				•	4-87
R4R					•	•	•	•				•	4-95
	Accessories												
	Plug-in connectors												4-99

4

More pressure valves are presented in the following chapters:
Chapter 7: Sandwich Valves
Chapter 8: Slip-In Cartridge Valves
Chapter 9: SAE Flange Valves
Chapter 10: Valves for Pipe Mounting

The pressure relief valve series VS is a direct operated spool valve for subplate mounting. The connection and function is according to ISO 6264.

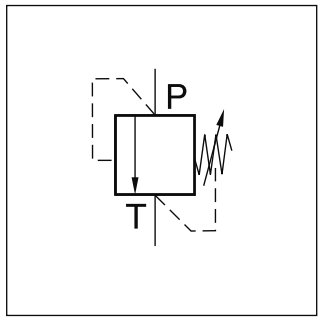

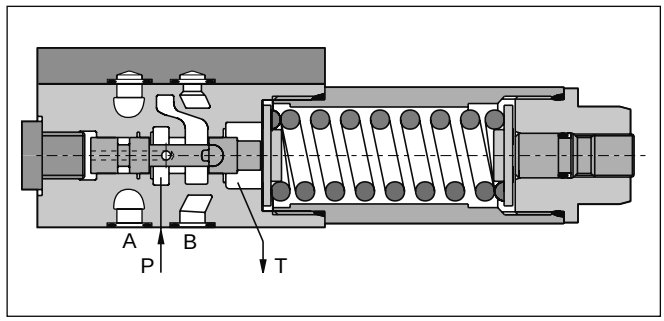

Function

- Spool type valve
- Subplate mounting according to ISO 6264
- 5 pressure stages
- 2 adjustment modes
- Gauge port

4

Ordering code

VS		A	06	V	G		
Pressure relief valve	**Pressure stages**	**Adjustment screw with hexagon socket**	**Nominal size**	**FPM seals**	**Gauge port G1/4“**	**Lock**	**Design series** (not required for ordering)

Code	Pressure stages
025	up to 25 bar
064	**up to 64 bar**
160	**up to 160 bar**
210	**up to 210 bar**
350	up to 350 bar

Code	Lock
omit	**–**
Z	Cylinder lock

Bold letters =
Short-term availability

Technical data

General		
Design		Direct operated relief valve spool type
Nominal size		DIN NG06 / CETOP 03 / NFPA D03
Interface		Subplate mounting according to ISO 6264
Mounting position		unrestricted
Ambient temperature	[°C]	-20...+60
$MTTF_D$ value	[years]	150
Weight	[kg]	1.3
Hydraulic		
Max. operating pressure	[bar]	Port P 350, Port T depressurized
Pressure stages	[bar]	25, 64, 160, 210, 350
Nominal flow	[l/min]	25
Fluid		Hydraulic oil according to DIN 51524
Fluid temperature	[°C]	-20…+70
Viscosity permitted recommended	[cSt] / [mm²/s] [cSt] / [mm²/s]	20…400 30...80
Filtration		ISO 4406 (1999); 18/16/13

VS UK.indd RH 17.04.2015

p/Q performance curves

Pressure stage 25 bar

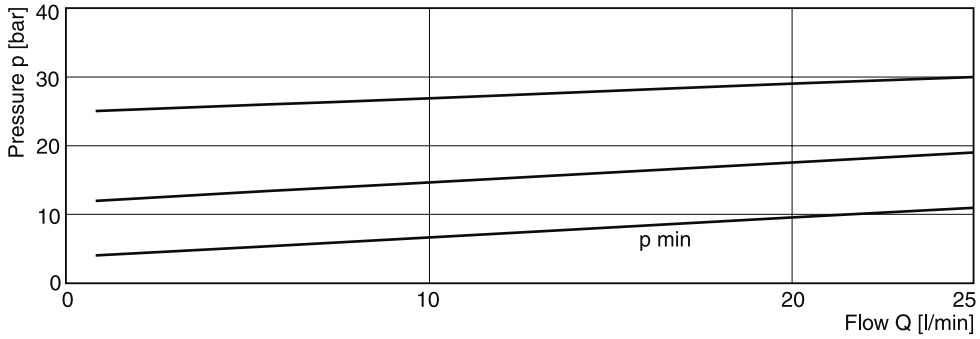

Pressure stage 64 bar

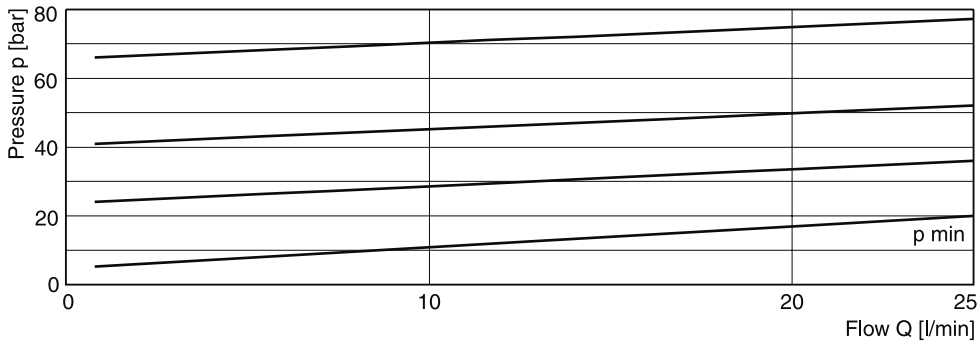

Pressure stage 160, 210 and 350 bar

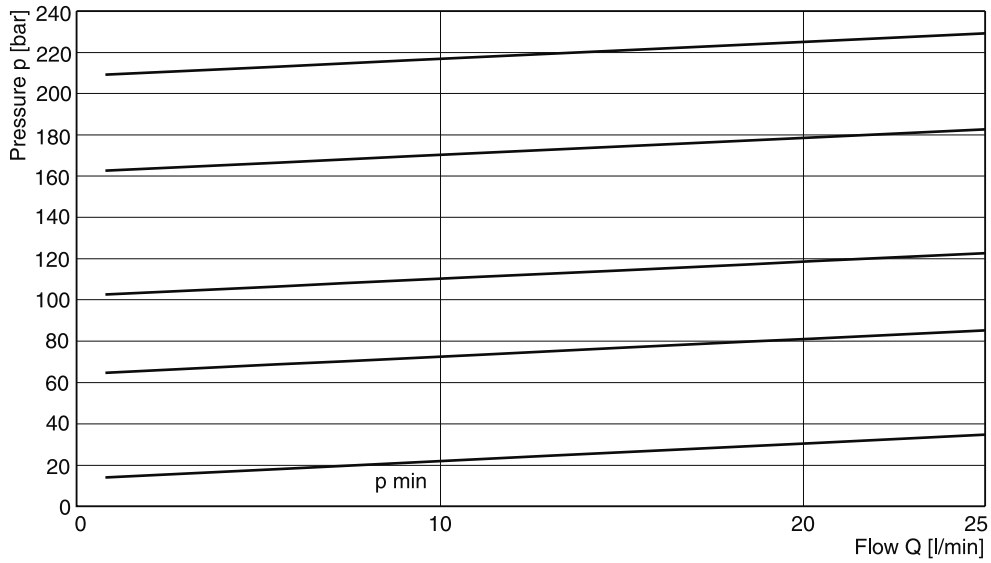

All characteristic curves measured with HLP46 at 50 °C.

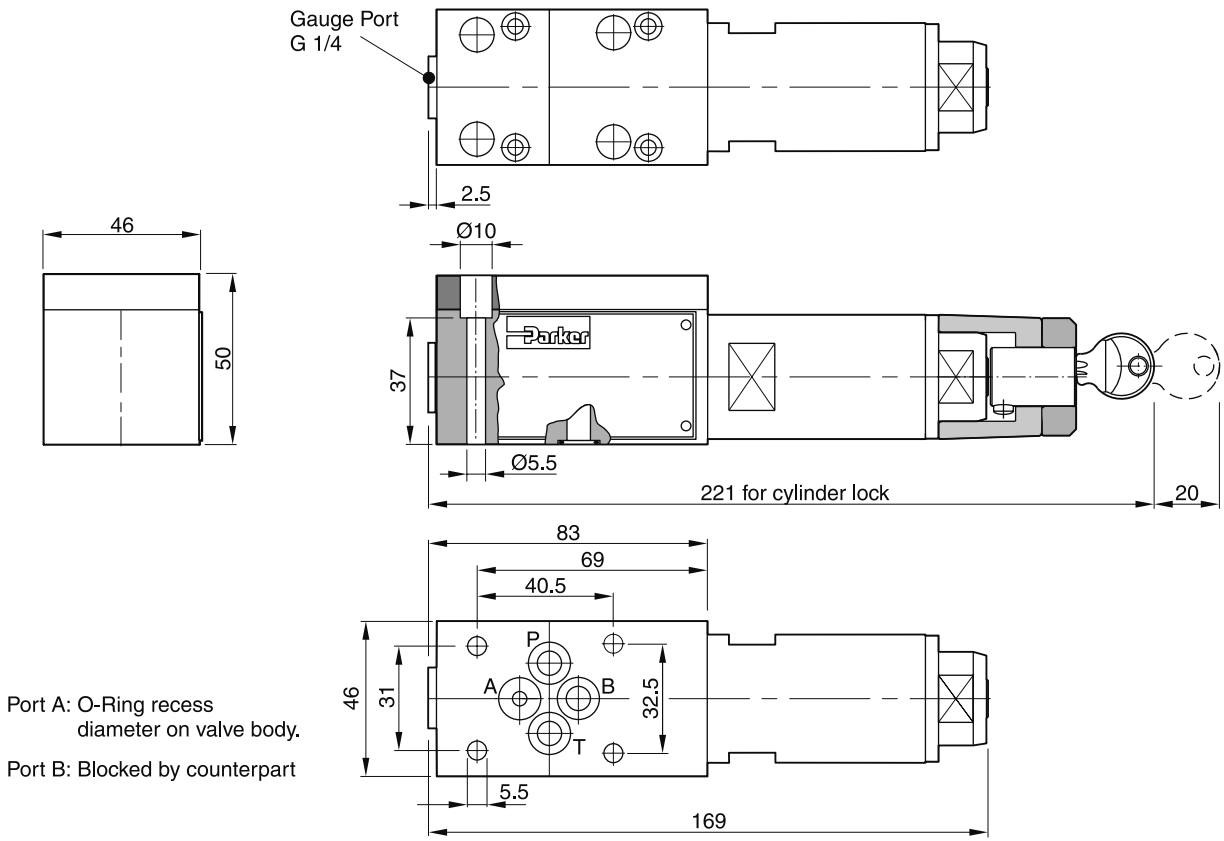

Port A: O-Ring recess diameter on valve body.

Port B: Blocked by counterpart

Surface finish	Bolt kit			Kit FPM
R_{max}6.3 ▱ 0.01/100	BK443	4x M5x45 ISO 4762-12.9	7.6 Nm ±15 %	SK-VB/VM/VS-A06V

Mounting pattern ISO 6264, code 6264-03-04-*-97

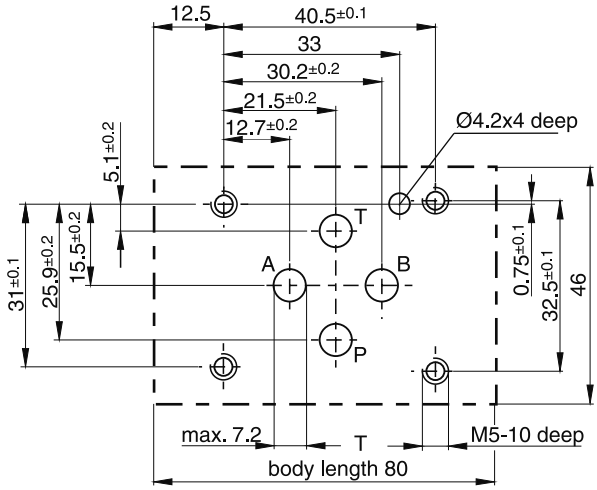

VS UK.indd RH 17.04.2015

Direct operated pressure relief valve with manual adjustment. The series VB can also be used as a pressure sequence valve, because of the high pressure capability in the outlet port and the external drain port.

VB*A10

Features

- Spool type valve
- Subplate mounting according to ISO 5781
- 5 pressure stages at NG06
- 3 pressure stages at NG10
- 2 adjustment modes

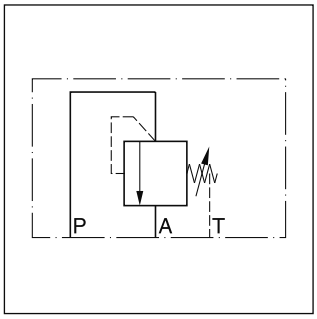

VB*A06

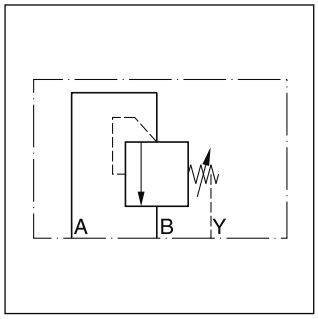

VB*A10

VB*A06

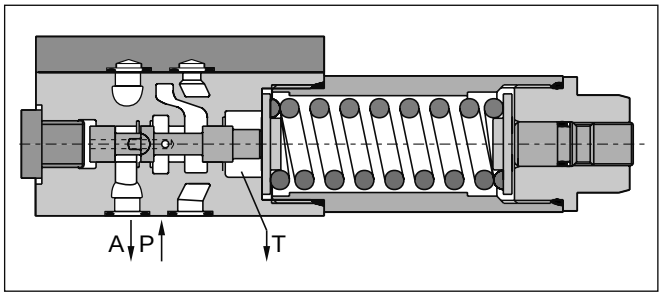

VB*A10

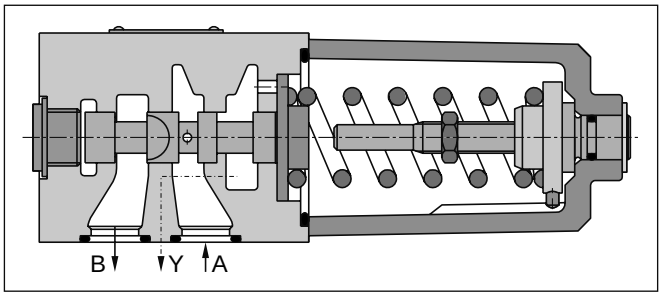

Ordering code

VB		A		V			
Pressure relief valve	**Pressure stages**	**Adjustment screw with hexagon socket**	**Nominal size**	**FPM seals**	**Gauge port**	**Lock**	**Design series** (not required for ordering)

Code	Pressure stages
025 [1]	up to 25 bar
064	**up to 64 bar**
125 [2]	**up to 125 bar**
160 [1]	**up to 160 bar**
210	**up to 210 bar**
350 [1]	up to 350 bar

Code	Nominal size
06	**NG06**
10	**NG10**

Code	Lock
omit	**–**
Z	Cylinder lock

Code	Gauge port
G [1]	**G 1/4”**
M [2]	**M18x1.5**

Bold letters =
Short-term availability

[1] Only NG06.
[2] Only NG10.

VB UK.indd RH 17.04.2015

General			
Design		Direct operated pressure relief valve, spool type	
Nominal size		**NG06 (CETOP 03 / NFPA D03)**	**NG10 (CETOP 05 / NFPA D05)**
Interface		Subplate mounting according to ISO 5781	
Mounting position		unrestricted	
Ambient temperature	[°C]	-20...+60	
$MTTF_D$ value	[years]	150	
Weight	[kg]	1.3	3.7
Hydraulic			
Max. operating pressure	[bar]	Port P and A 350 Port T depressurized	Port A and B 350 Port Y depressurized
Pressure stages	[bar]	25, 64, 160, 210, 350	64, 125, 210
Nominal flow	[l/min]	25	60
Fluid		Hydraulic oil according to DIN 51524	
Fluid temperature	[°C]	-20...+70	
Viscosity permitted recommended	[cSt] / [mm²/s] [cSt] / [mm²/s]	20...400 30...80	
Filtration		ISO 4406 (1999); 18/16/13	

4

p/Q performance curves

VB*06

Setting pressure max. 25 bar

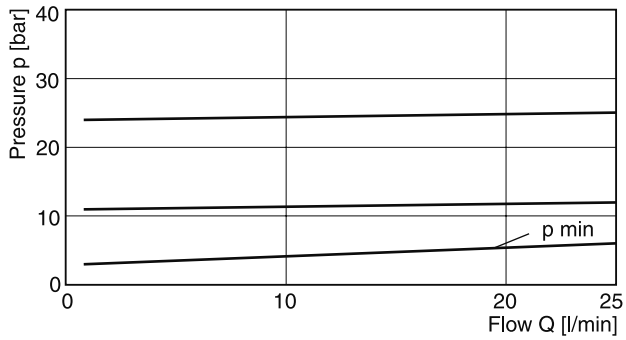

Setting pressure max. 64 bar

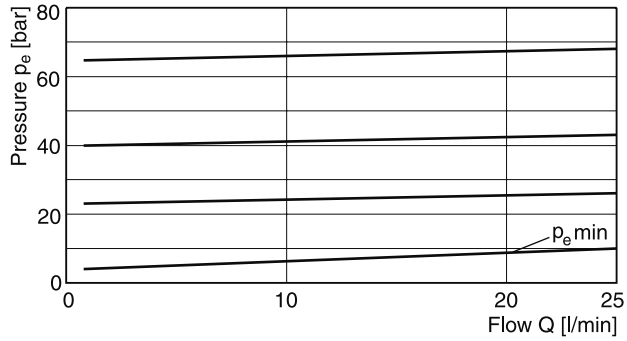

Setting pressure max. 160 or 210 bar

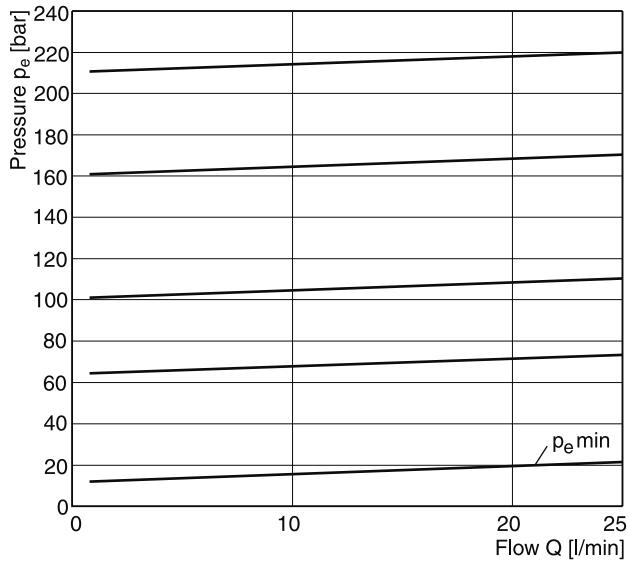

VB*10

Setting pressure max. 64 bar

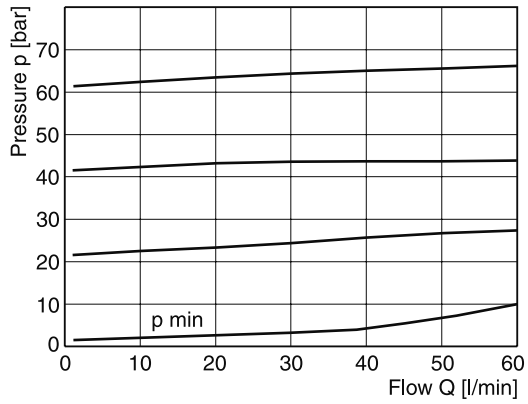

Setting pressure max. 210 bar

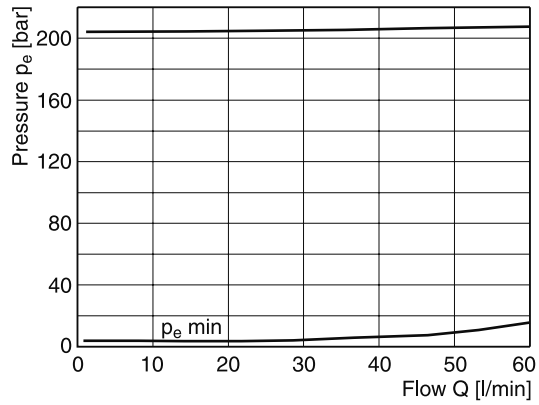

All characteristic curves measured with HLP46 at 50 °C.

4

NG06

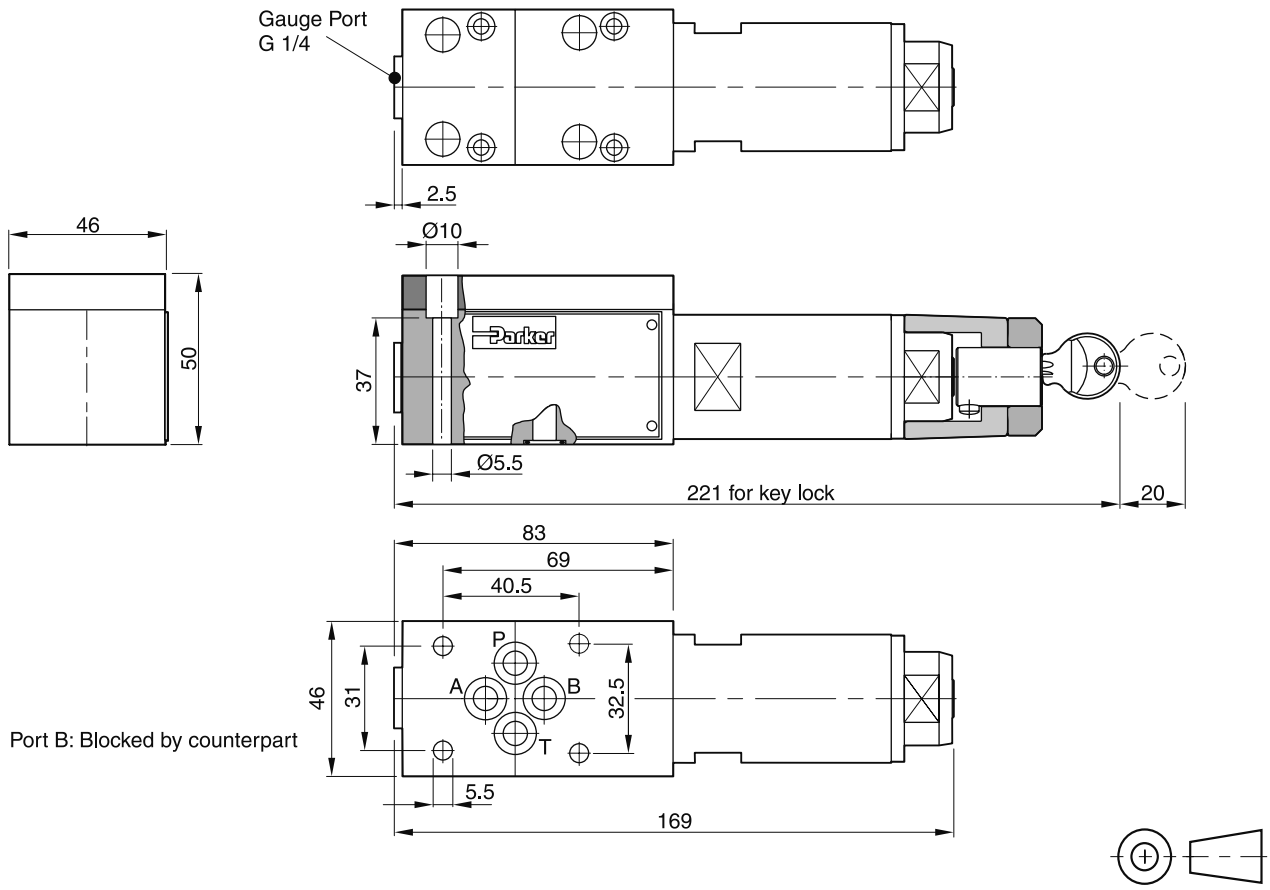

Surface finish	Bolt kit			Kit FPM
R_{max}6.3 ▱ 0.01/100	BK443	4x M5x45 ISO 4762-12.9	7.6 Nm ±15 %	SK-VB/VM/VS-A06V

Mounting pattern ISO 5781-03-04-0-00

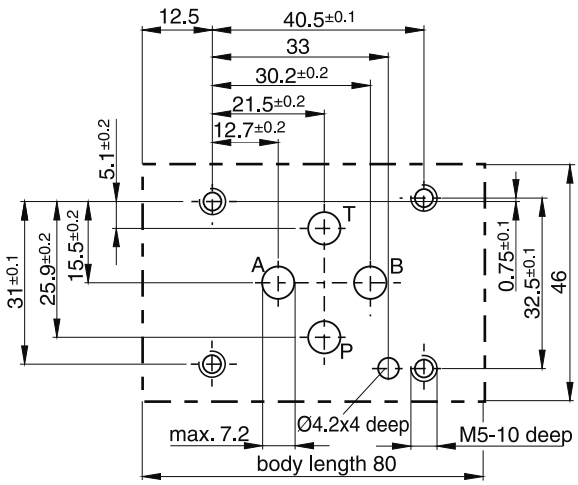

NG10

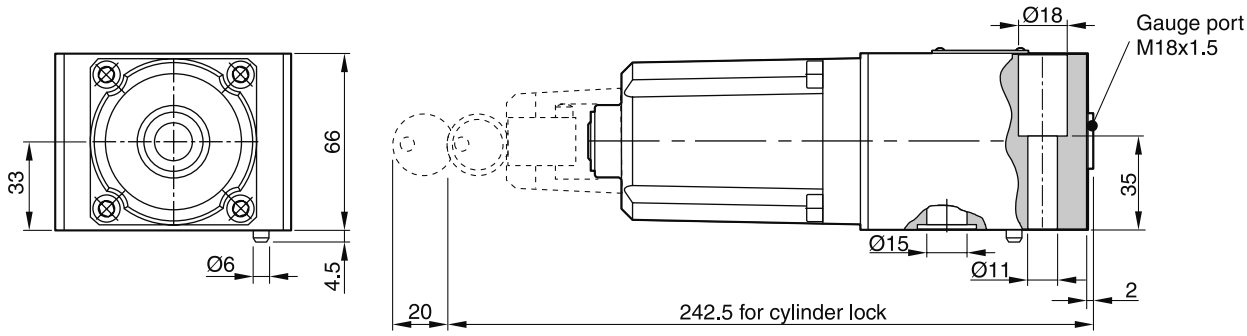

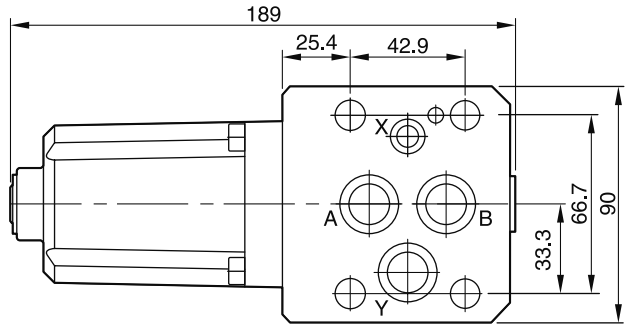

Surface finish	Bolt kit			Kit FPM
R_{max}6.3 ▱ 0.01/100	BK389	4x M10x50 ISO 4762-12.9	63 Nm ±15 %	SK-VB/VM-A10V

Mounting pattern ISO 5781-06-07-0-00 [1)]

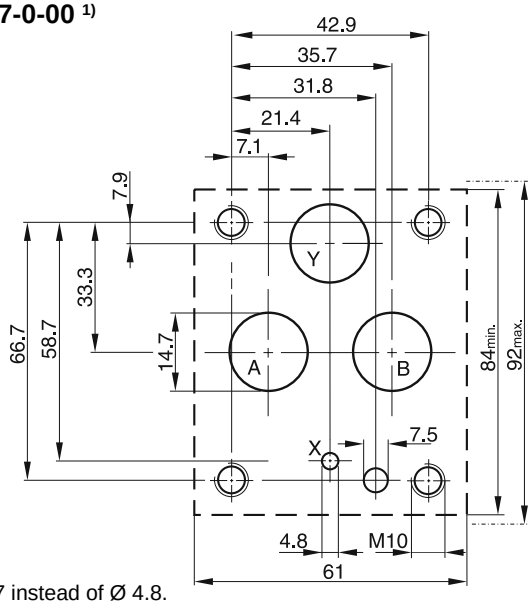

[1)] Deviating from ISO the Y port has Ø 14.7 instead of Ø 4.8.

Pilot operated relief valves of the series VBY consist of a pilot with manual adjustment and a spool type main stage. The valves need to be externally drained.

The series VBY can also be used as pressure sequence valve, because of the high pressure capability in the outlet port and the external drain port.

Features

- Subplate mounting acc. to ISO 5781
- Main stage spool type
- Pilot stage seated type
- 4 pressure stages
- 2 adjustment modes:
  - screw with hexagon socket
  - cylinder lock

VBY*A06

VBY*A10

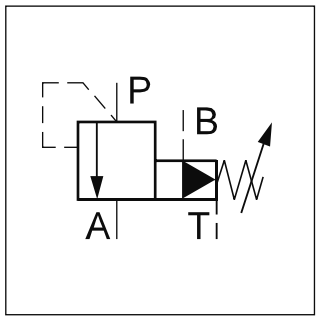

VBY*A06

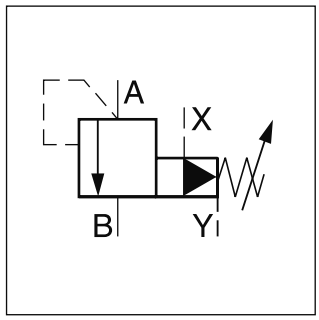

VBY*A10

VBY*A06

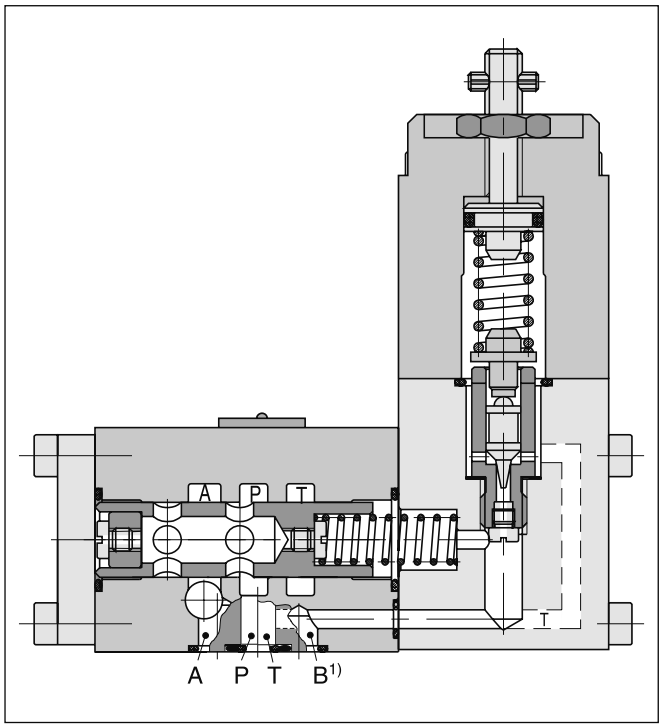

VBY*A10

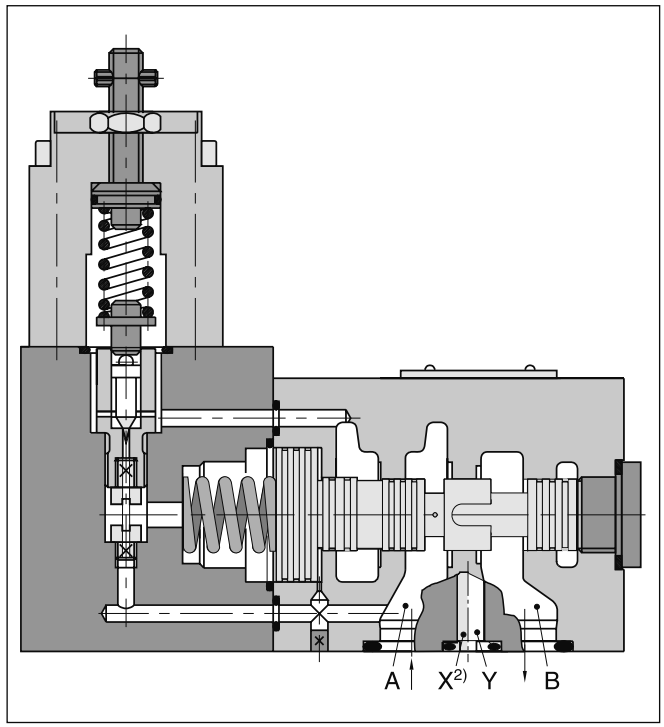

[1] Port B for remote control, otherwise to be blocked.
[2] Port X for remote control, otherwise to be blocked.

Ordering code

VBY	☐	☐	☐	☐	☐
Pressure relief valve	**Pressure stages**	**Adjustment**	**Nominal size**	**Seals**	**Design series** (not required for ordering)

Code	Pressure stages
064	**up to 64 bar**
160	**up to 160 bar**
210	**up to 210 bar**
315	up to 315 bar

Code	Adjustment
A	**Screw with hexagon socket**
H	Cylinder lock

Code	Seals
N	**NBR**
V	FPM

Code	Nominal size
06	**NG06**
10	**NG10**

Bold letters =
Short-term availability

Technical data

General			
Design		Pilot operated pressure relief valve, spool type	
Nominal size		**NG06**	**NG10**
Interface		Subplate mounting according to ISO 5781	
Mounting position		unrestricted	
Ambient temperature	[°C]	-20...+60	
$MTTF_D$ value	[years]	75	
Weight	[kg]	2.4	4.5
Hydraulic			
Max. operating pressure	[bar]	P, A 315, B blocked	A, B 350, X blocked
External drain port pressure	[bar]	T 100	Y 100
Pressure stages	[bar]	64, 160, 210, 315	
Fluid		Hydraulic oil according to DIN 51524	
Fluid temperature	[°C]	-20...+70 (NBR: -25...+70)	
Viscosity, permitted recommended	[cSt] / [mm²/s] [cSt] / [mm²/s]	20…400 30…80	
Filtration		ISO 4406 (1999); 18/16/13	
Nominal flow	[l/min]	See p/Q curves	
Pilot oil flow	[cm³/min]	approx. 500	approx. 1000

4

p/Q performance curves NG06

Max. 64 bar

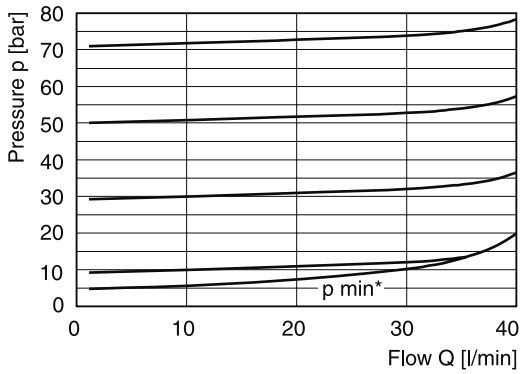

Max. 160 bar

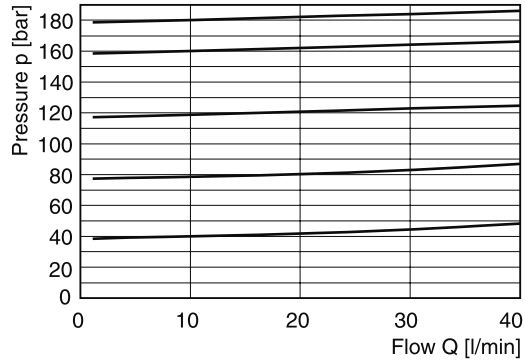

Max. 210 bar

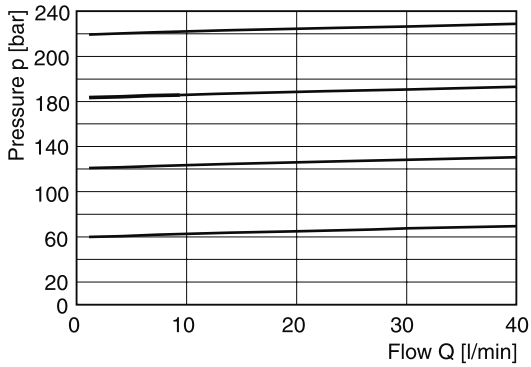

Max. 315 bar

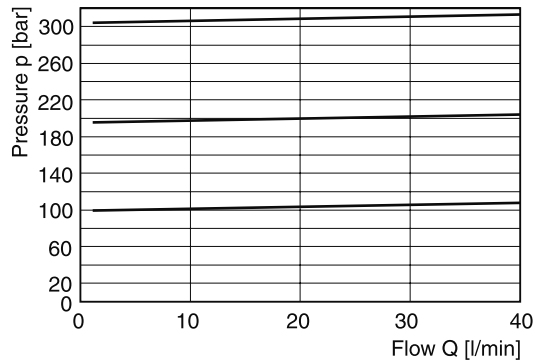

p/Q performance curves NG10

Max. 64 bar

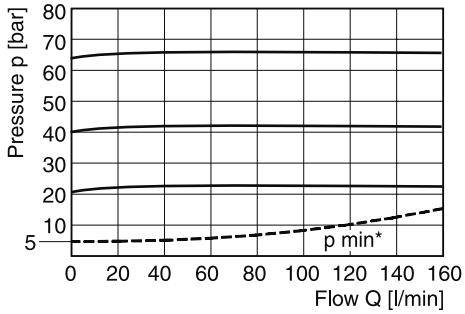

Max. 160 bar

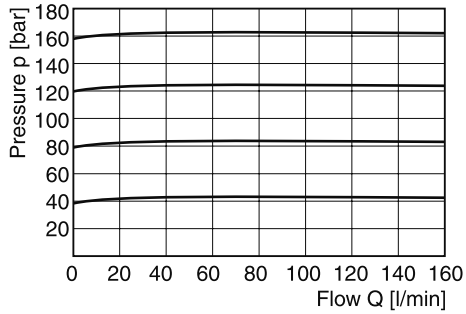

Max. 210 bar

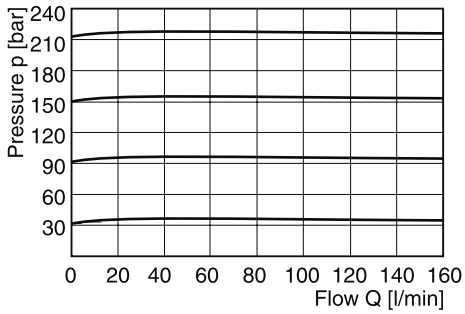

Max. 315 bar

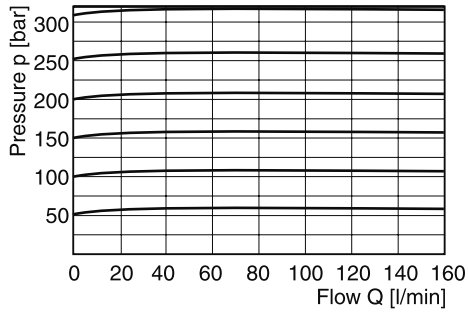

All characteristic curves measured with HLP46 at 50 °C.

* For all pressure stages.

VBY UK.indd RH 17.04.2015

NG06

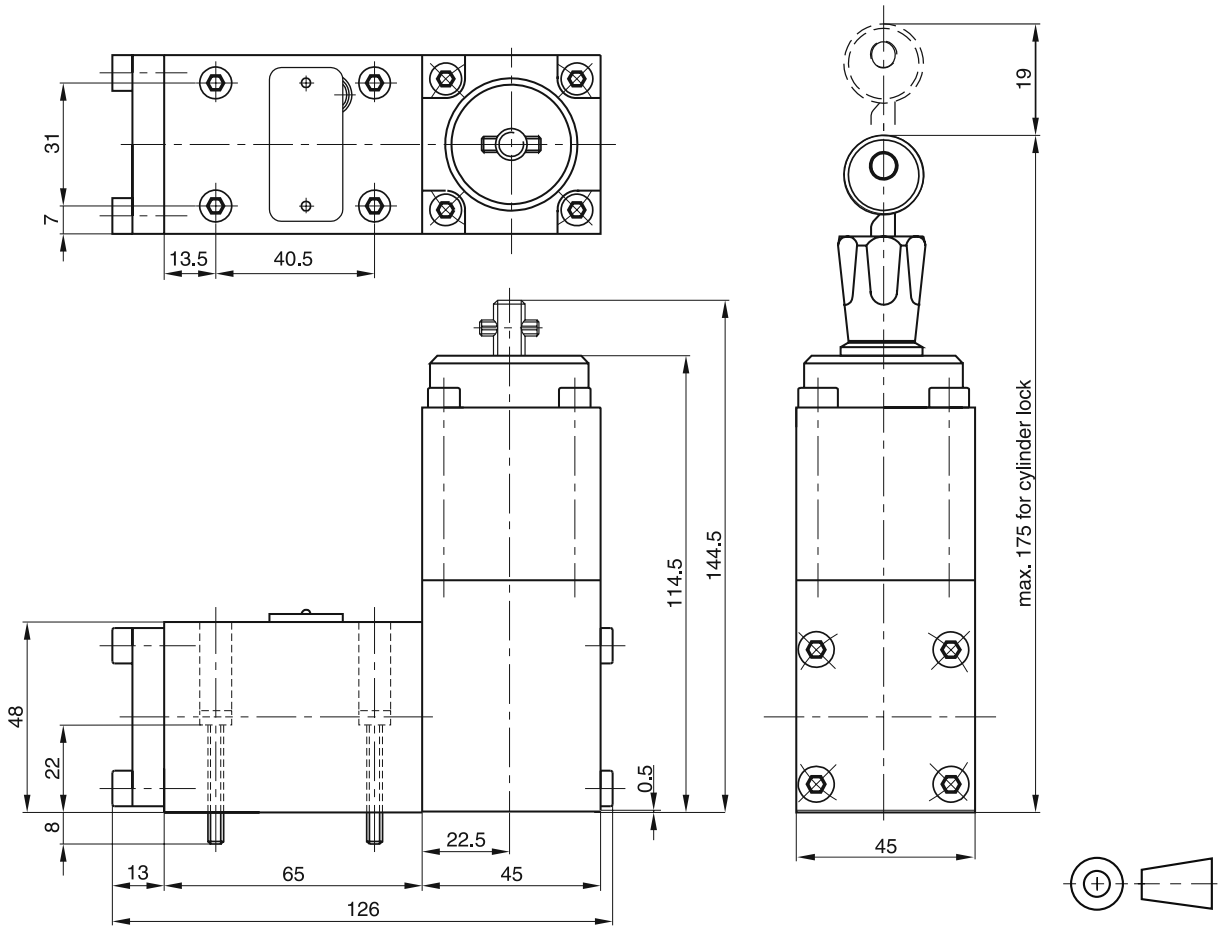

Surface finish	Bolt kit			Kit FPM
R_{max}6.3 ▱ 0.01/100	BK375	4x M5x30 ISO 4762-12.9	7.6 Nm ±15 %	SK-VBY-A06V

Mounting pattern ISO 5781-03-04-0-00

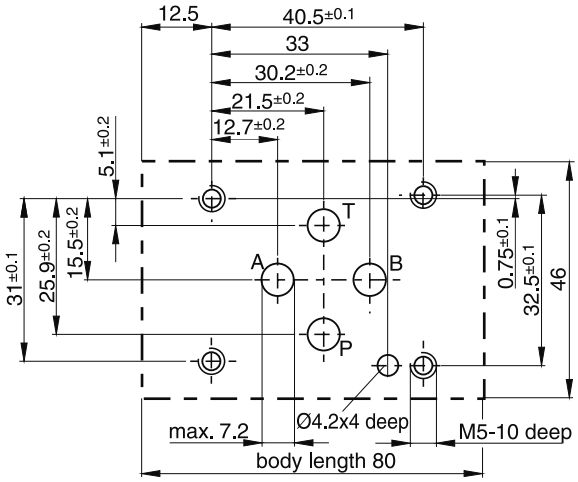

4

NG10

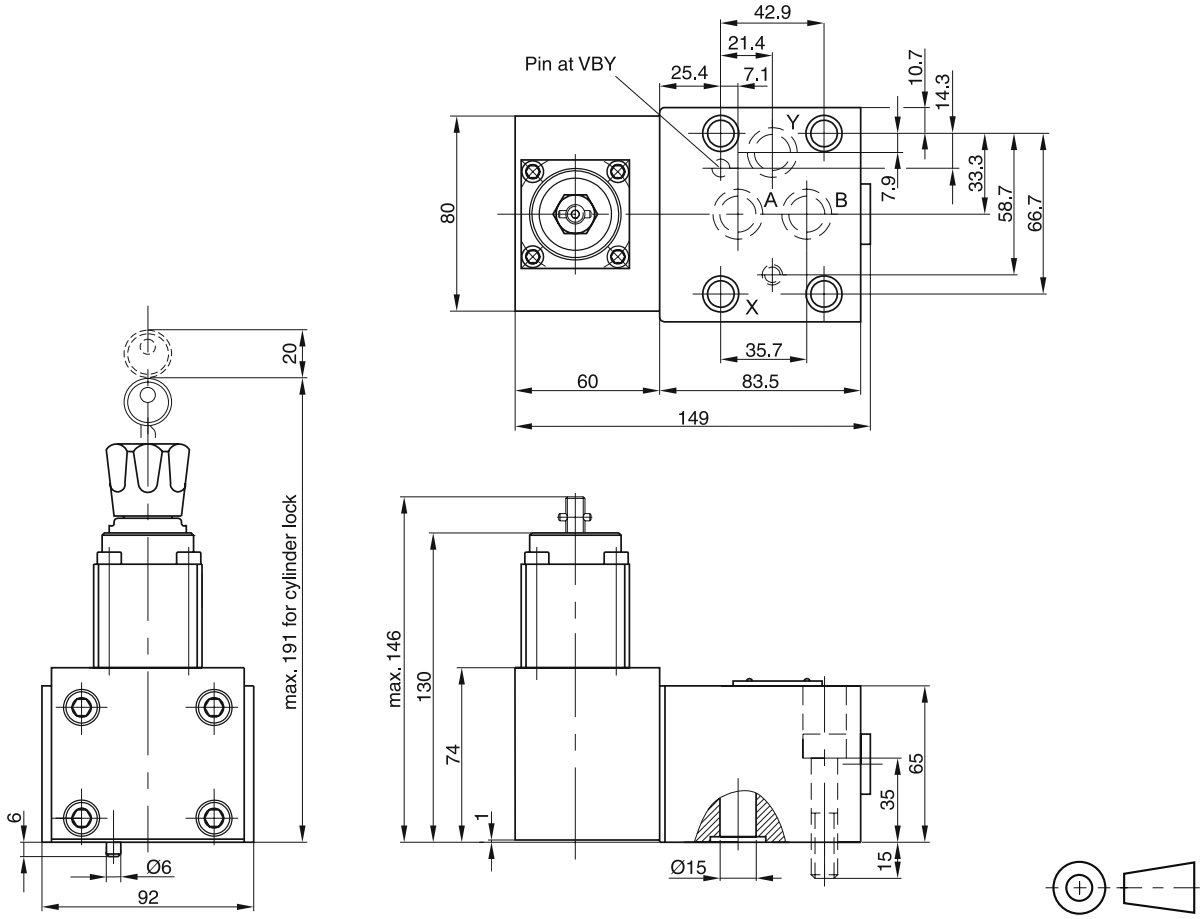

Surface finish	Bolt kit			Kit FPM
R_{max}6.3 ▱ 0.01/100	BK389	4x M10x50 ISO 4762-12.9	63 Nm ±15 %	SK-VB/VM-A10V

Mounting pattern ISO 5781-06-07-0-00 [1)]

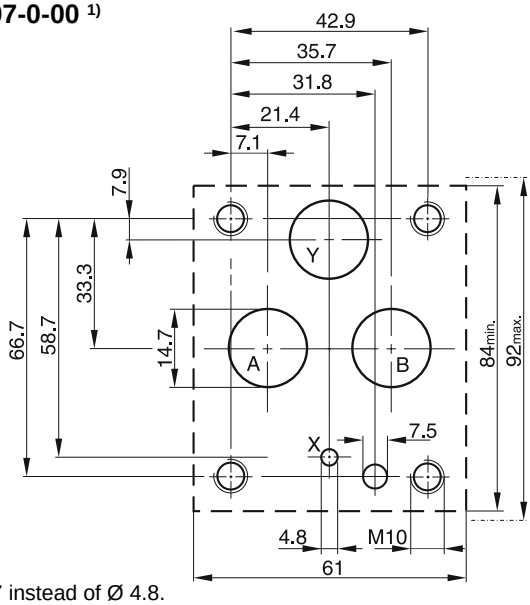

[1)] Deviating from ISO the Y port has Ø 14.7 instead of Ø 4.8.

VBY UK.indd RH 17.04.2015

The direct operated pressure relief valve series EVSA is a seated type valve for screw-in mounting. It is available in two sizes and three pressure stages.

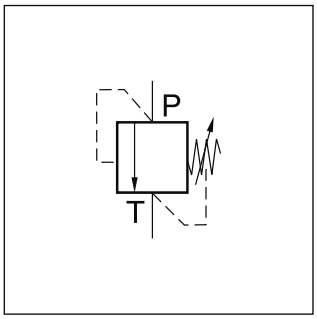

Function

When the pressure in port P exceeds the setting pressure the cone opens to port T and thus limits the pressure in port P to the adjusted level.

The integrated damping spool prevents pressure fluctuations in the transition region. The pressure is set by the adjusting screw, which is locked by the clamping screw. The setting can optionally be secured by a cylinder lock.

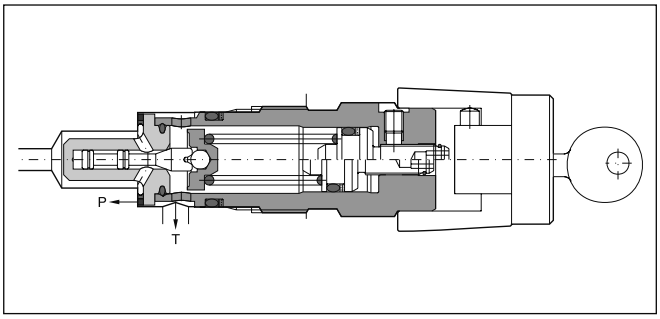

Features

- Seated type valve
- Screw-in mounting
- 3 pressure stages
- 2 adjustment modes:
  - screw with hexagon socket
  - cylinder lock

Note

The spring must be unloaded when the EVSA is screwed out of the manifold.

Ordering code

EVSA		A		1		
Pressure relief valve	**Pressure stages**	**Adjustment screw with hex. socket**	**Nominal size / thread type**	**FPM Seals**	**Design series** (not required for ordering)	**Lock**

Code	Pressure stages
064	**up to 64 bar**
160	**up to 160 bar**
315	**up to 315 bar**

Code	Lock
omit	**–**
Z	Cylinder lock

Code	Nominal size
06	**NG06, M28x1.5**
10	**NG10, M35x1.5**

Bold letters =
Short-term availability

Technical data

General			
Design		Direct operated relief valve, seated type	
Nominal size		**NG06**	**NG10**
Interface		Screw-in mounting	
Mounting position		unrestricted	
Ambient temperature	[°C]	-20...+60	
$MTTF_D$ value	[years]	150	
Weight	[kg]	0.3	0.45
Hydraulics			
Max. operating pressure	[bar]	Port P 315, Port T depressurized	
Pressure stages	[bar]	64, 160, 315	
Nominal flow	[l/min]	40 (NG06), 80 (NG10)	
Fluid		Hydraulic oil according to DIN 51524	
Fluid temperature	[°C]	-20…+70	
Viscosity permitted	[cSt] / [mm²/s]	20...400	
recommended	[cSt] / [mm²/s]	30...80	
Filtration		ISO 4406 (1999); 18/16/13	

EVSA UK.INDD RH 17.04.2015

4

Δp/Q performance curves

NG06 pressure stage 64 bar

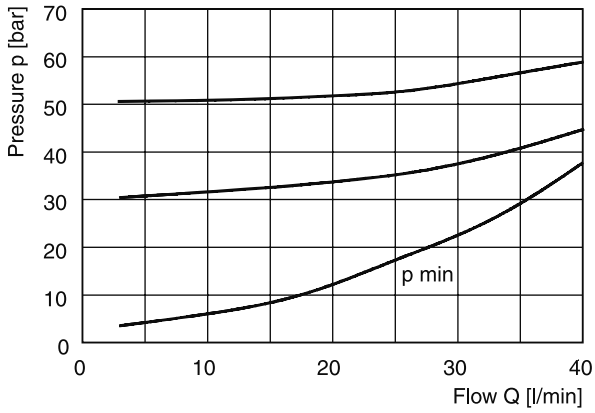

NG10 pressure stage 64 bar

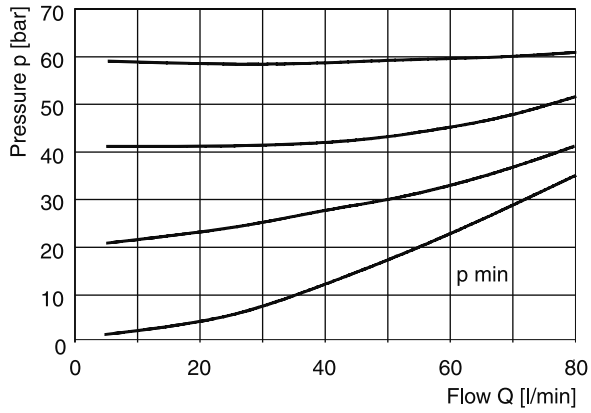

NG06 pressure stage 160 bar

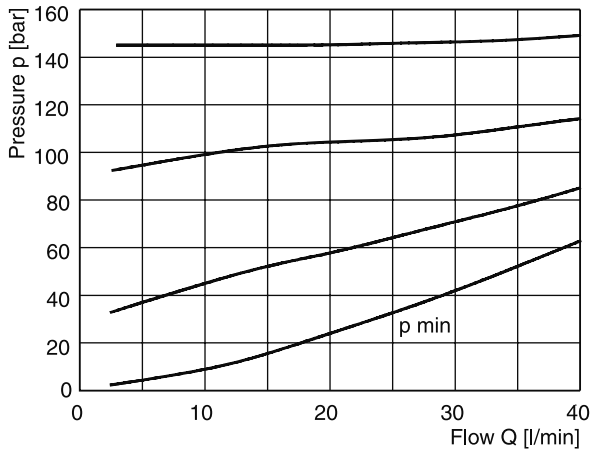

NG10 pressure stage 160 bar

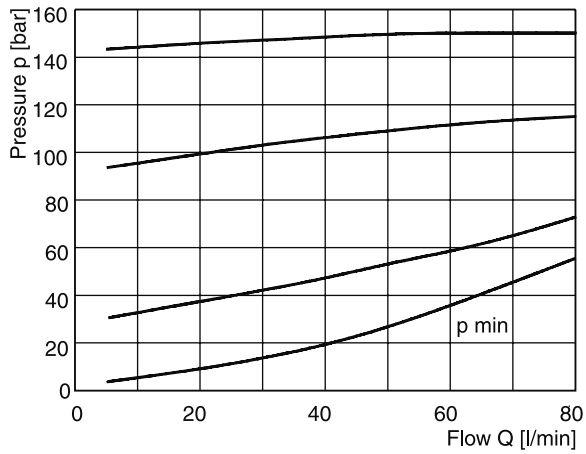

NG06 pressure stage 315 bar

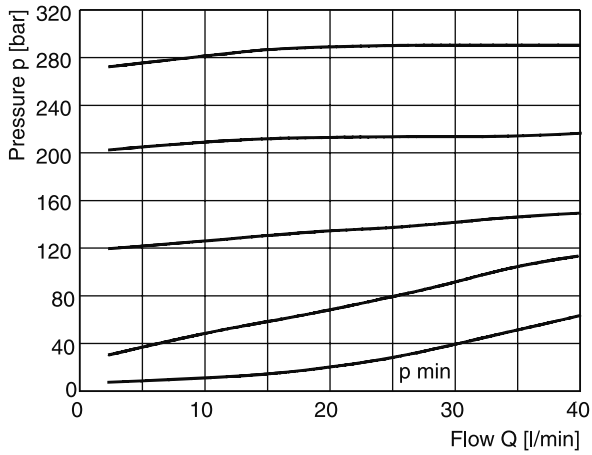

NG10 pressure stage 315 bar

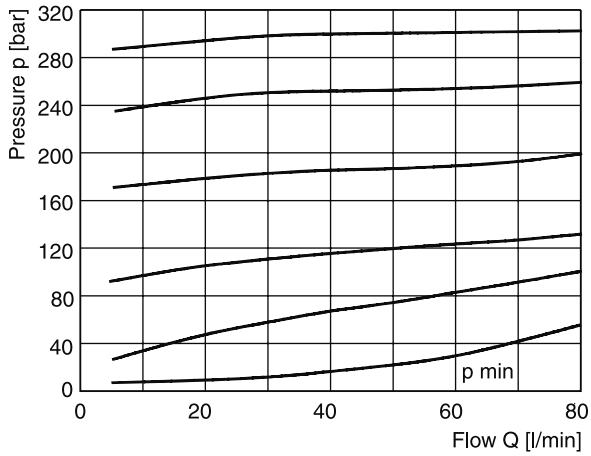

All characteristic curves measured with HLP46 at 50 °C.

NG06

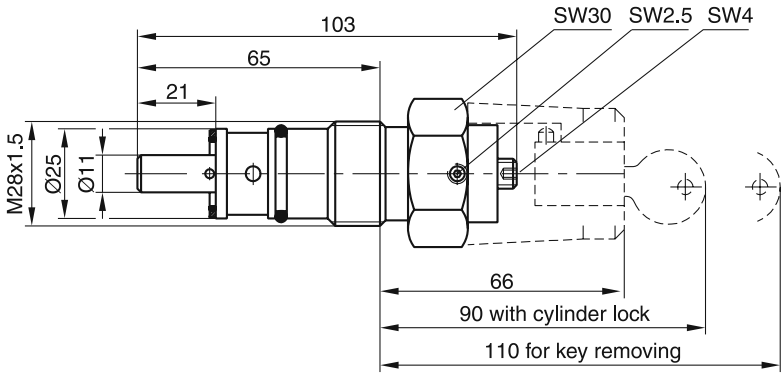

Kit
SK-EVSAA0613

NG10

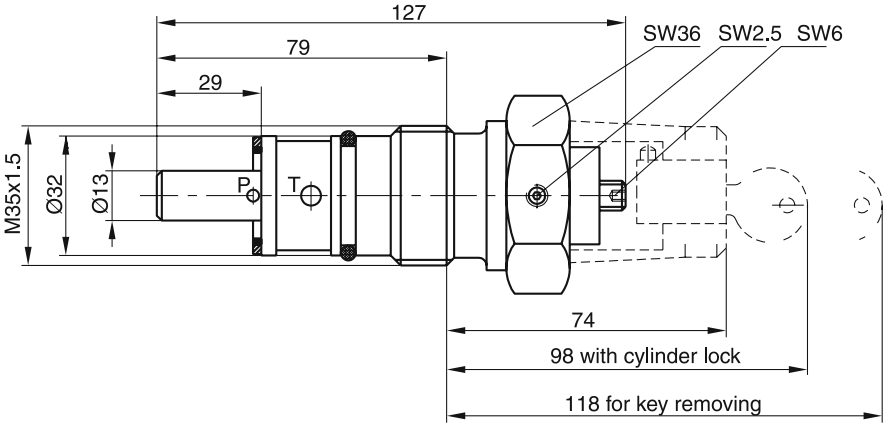

Kit
SK-EVSAA1013

Installation dimensions

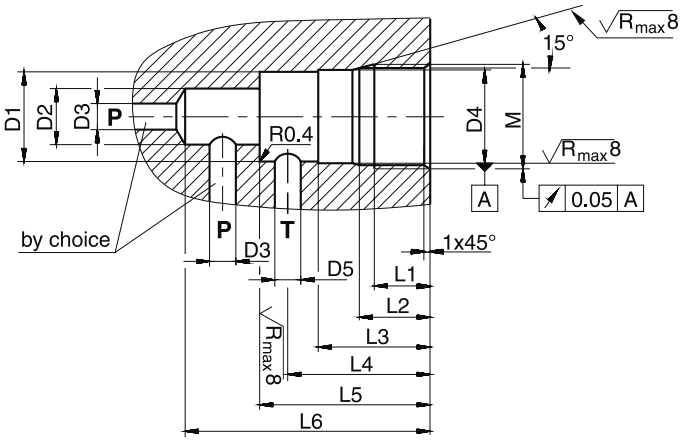

Tightening torque [Nm] ±5 %		
Pressure stages	NG06	NG10
064, 160	50	100
315	80	150

Size	M	D_1	D_2	D_3	D_4	D_5	L_1	L_2	L_3	L_4	L_5	L_6
NG06	M28 x 1.5	Ø24.8	Ø15	Ø6.8	$Ø25^{H9}$	Ø6.8	15	19	30	35	45	65
NG10	M35 x 1.5	Ø31.8	Ø18.5	Ø10	$Ø32^{H9}$	Ø10	18	23	35	41 - 46	52	80

EVSA UK.INDD RH 17.04.2015

Direct operated pressure relief valves series R1E02 are seated type valves typically used for remote control of pilot operated pressure valves or compensators of variable pumps. In applications where the reliability and simplicity of a hydraulic remote control are preferred to an electro-hydraulic system the R1E02 series is an ideal solution.

Features

- Seated type valve
- Body variants:
  - front panel mounting
  - subplate mounting
- 3 pressure stages
- 3 adjustment modes:
  - hand knob
  - acorn nut with lead seal
  - cylinder lock

Front panel mounting

Subplate mounting

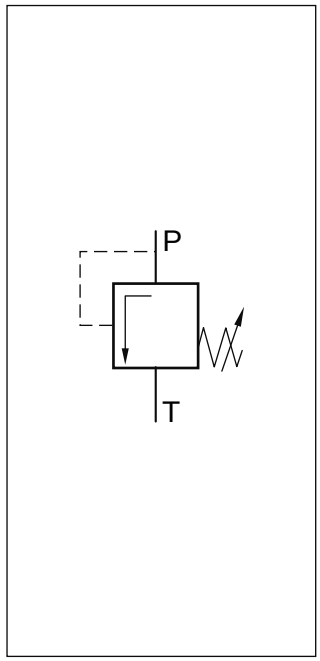

R1E02, front panel mounting

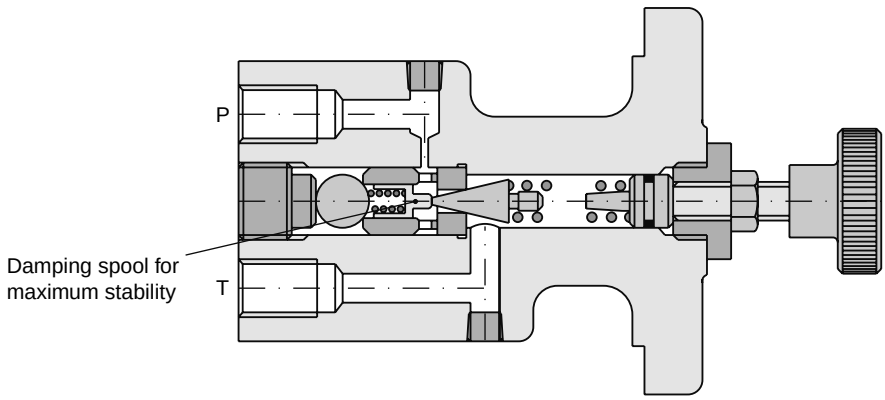

Typical application as remote pilot valve

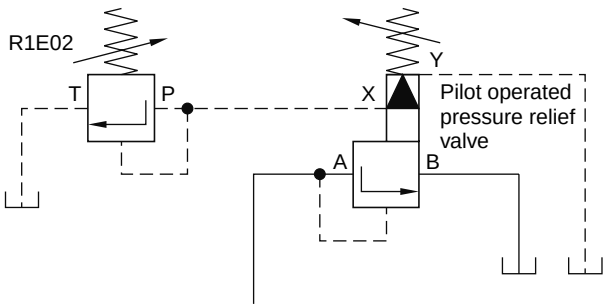

Ordering code

R1E02	–	☐	☐	2	☐	A	1	☐
Pressure relief valve		**Body**	**Pressure stages**	**Connections G1/4“**	**Adjust-ment**	**Design series**	**Seals NBR**	**Options**

Code	Body
2	Front panel mounting
3	Subplate mounting

Code	Pressure stages
1	up to 105 bar
3	up to 210 bar
5	up to 350 bar

Code	Adjustment
1	Hand knob Ø 32 mm
3	Acorn nut with lead seal
4 [1)]	Cylinder lock

[1)] On bodies for subplate mounting use plate S16-64188 if necessary.

Technical data

General			
Design		Direct operated relief valve, seated type	
Nominal size		1/4”	
Body variants		Front panel mounting	Subplate mounting
Mounting position		unrestricted	
Ambient temperature	[°C]	-20...+60	
$MTTF_D$ value	[years]	150	
Weight	[kg]	2.1	1.0
Hydraulics			
Max. operating pressure	[bar]	Port P 350, Port T depressurized	
Pressure stages	[bar]	105, 210, 350	
Fluid temperature	[°C]	-25...+70	
Nominal flow	[l/min]	3.8	
Fluid		Hydraulic oil according to DIN 51524	
Minimum setting pressure	[bar]	7	
Viscosity permitted recommended	[cSt] / [mm²/s] [cSt] / [mm²/s]	20…400 30…80	
Filtration		ISO 4406 (1999); 18/16/13	

Typical system pressure in relation to flow

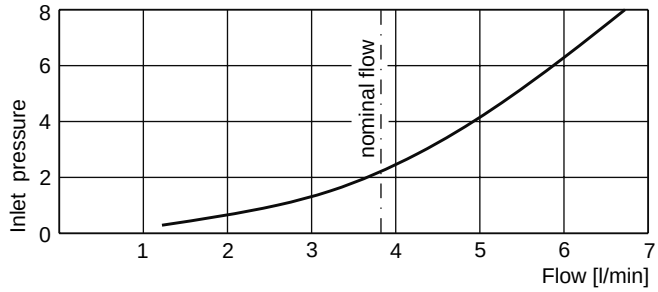

Measured with HLP46 at 50 °C.

R1E02 UK.inddRH 25.03.2015

4

Front panel mounting

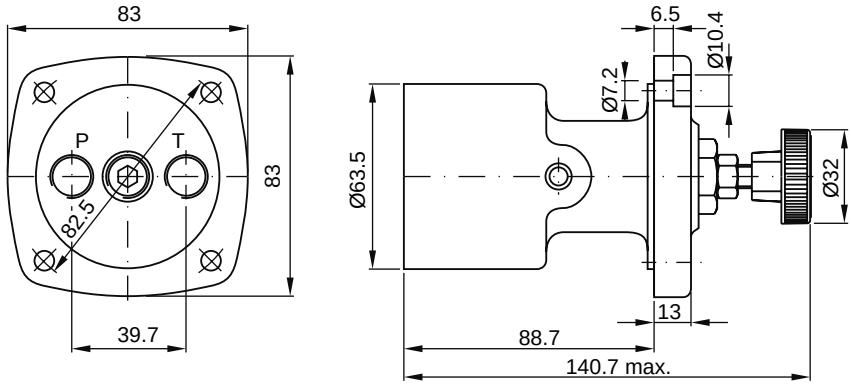

Ports P and T: G1/4”

Kit
S26-58466-0

Subplate mounting

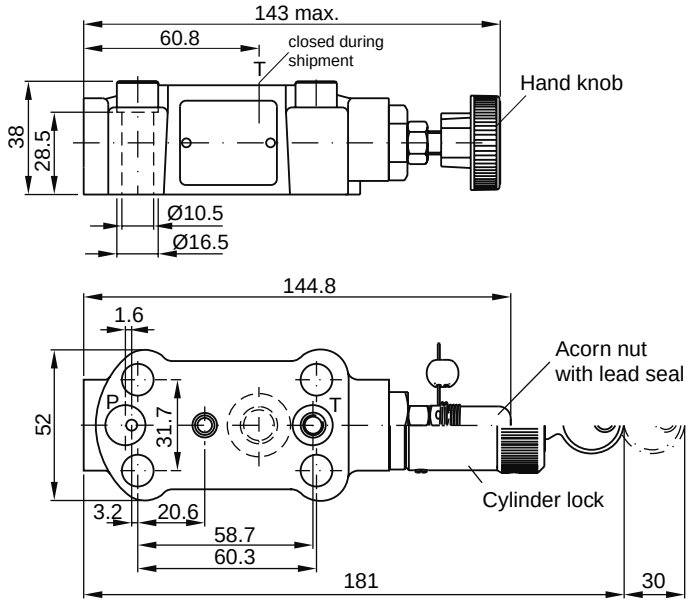

Kit
S16-91963-0

Pilot operated pressure relief valves series R4V (DIN 24340 Form D) and R6V (DIN 24340 Form E) consist of a manually adjusted pilot stage and a seated type main stage.

A vent function with a solenoid operated directional valve is available for circulation at minimum pressure.

Features

- Pilot operated with manual adjustment
- 2 interfaces
  - R4V subplate ISO 6264 (DIN 24340 Form D) with VV01 vent valve
  - R6V subplate ISO 6264 (DIN 24340 Form E) with CETOP 03 vent valve
- 3 pressure stages
- 3 adjustment modes:
  - hand knob
  - acorn nut with lead seal
  - cylinder lock
- Remote control via port X

R6V06

R6V06 with vent valve

R4V06 with vent valve

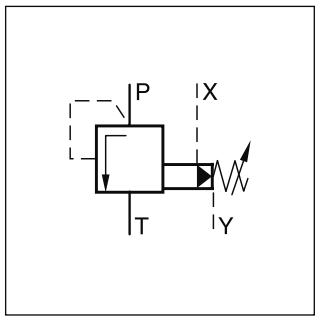

Function:

Series R4V/R6V

System pressure in port P is applied via the X gallery to the spring loaded cone in the pilot head. The pilot head controls the pressure in the Z area on top of the main cartridge which is additionally kept close by the main spring.

If the pilot pressure exceeds the setting pressure the pilot cone opens and thus limits the pilot pressure.

When the system pressure exceeds the pilot pressure plus the spring force, the main cartridge opens to port T and limits the pressure in port P to the adjusted level.

Series R4V/R6V with vent function

Additionally to the relief function, a solenoid operated vent valve connects the Z area to tank. This allows oil circulation from P to T at minimum pressure drop. The vent valve can either be a standard CETOP 03 valve (R6V) or a sandwich unit (R4V). For both types the vent position can be either at the energized or de-energized solenoid.

R6V06 with vent valve

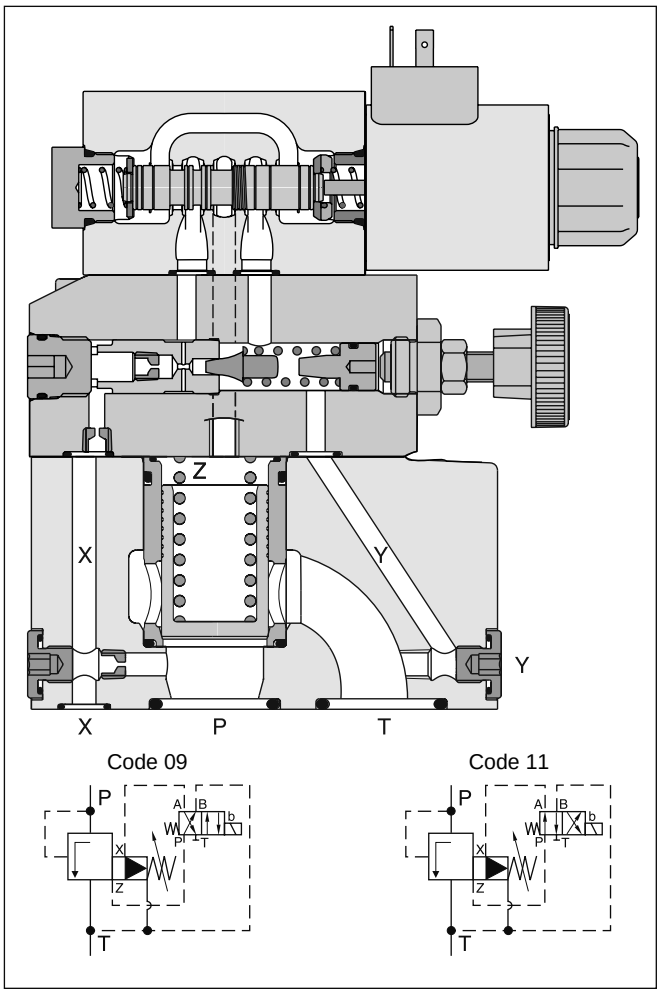

R		V		–	5								
Pressure valve	**Interface**	**Relief function**	**Nominal size**		**Max. pressure (350 bar)**	**Drain port**	**Pressure setting range**	**Adjustment**	**Pilot oil**	**Design**	**Seals**	**Design series** (not required for ordering)	**Modifications**

Code	Interface	
4	Subplate mounting ISO 6264	NG10 and 25 / NG32 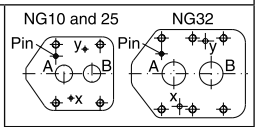
6		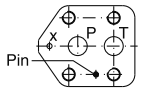

Code	Seals
1	NBR
5	FPM

Code	Design
A	R4V
B	R6V

Code	Nominal size
03	NG10
06	NG25
10	NG32

Pilot oil	
Code	Drain line
0	internal
1 [1)]	external from sub-plate
2 [2)]	external from valve body (Y-port)

Code	Interface	Drain port
3	R4V	Y port in mounting pattern
9	R6V	Y-port = G 1/8“

Code	Adjustment
1	Hand knob 32 mm dia. (standard)
3	Acorn nut with lead seal
4	Cylinder lock

Code	Pressure stages
1	up to 105 bar
3	up to 210 bar
5	up to 350 bar

[1)] R4V only.
[2)] R6V only.

R		V		–	5											
Pressure valve	Interface	Relief function	Nominal size		Max.pressure (350 bar)	Drain port	Pressure setting range	Adjustment	Pilot oil	Vent valve function	Solenoid voltage	Design	Seals	Design series (not required for ordering)	Modifications

Code	Interface	
4	Subplate mounting ISO 6264	NG10 and 25 / NG32
6		

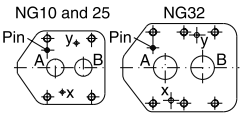

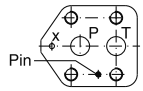

Code	Nominal size
03	NG10
06	NG25
10	NG32

Code	Interface	Drain port
3	R4V	Y port in mounting pattern
9	R6V	Y-port = G 1/8“

Code	Pressure stages
1	up to 105 bar
3	up to 210 bar
5	up to 350 bar

Code	Adjustment
1	Hand knob (Standard)
3	Acorn nut with lead seal
4	Turning knob with key lock

Code	Modification
031[4]	Vent function with slow unloading
VFM[4]	Vent function with slow unloading

Code	Seals
1	NBR
5	FPM

Code	Design
A	R4V
B	R6V

Code	Voltage
G0R	12 V =
G0Q	24 V =
GAR[3]	98 V =
GAG[3]	205 V =
W30	110 V / 50 Hz 120 V / 60 Hz
W31	230 V / 50 Hz 240 V / 60 Hz

Code	Vent valve
09	Solenoid not activ. unpress. circulation
11	Solenoid activated unpress. circulation

Pilot oil	
Code	Drain line
0	internal
1 [1]	external from subplate
2 [2]	external from valve body (Y-port)

[1] R4V only.
[2] R6V only.
[3] To be used in combination with rectifier plugs at 120 VAC / 230 VAC power supply.
[4] Vent valve function code 09 only.

R4V-R6V UK.indd 17.04.2015

4

R4V/R6V

General				
Nominal size		**NG10**	**NG25**	**NG32**
Interface		Subplate mounting acc. ISO 6264 (DIN 24340)		
Mounting position		Unrestricted, horizontal mounting preferred		
Ambient temperature	[°C]	-20...+60		
$MTTF_D$ value	[years]	75		
Weight Series R6V	[kg]	4.5	5.8	7.8
Weight Series R4V	[kg]	2.7	4.5	6.0
Hydraulic				
Max. operating pressure	[bar]	Ports P (or A) and X up to 350, Port T (or B) and Y 30		
Pressure stages	[bar]	105, 210, 350		
Nominal flow	[l/min]	250	500	650
Fluid		Hydraulic oil according to DIN 51524		
Viscosity, permitted	[cSt] / [mm²/s]	20 ... 400		
recommended	[cSt] / [mm²/s]	30 ... 80		
Fluid temperature	[°C]	-20...+70 (NBR: -25...+70)		
Filtration		ISO 4406 (1999); 18/16/13		

R4V/R6V with vent function

General				
Nominal size		**NG10**	**NG25**	**NG32**
Interface		Subplate mounting acc. ISO 6264 (DIN 24340)		
Mounting position		Unrestricted, horizontal mounting preferred		
Ambient temperature	[°C]	-20...+60		
$MTTF_D$ value	[years]	75		
Weight Series R6V	[kg]	5.9	7.2	9.2
Weight Series R4V	[kg]	4.4	6.2	7.7
Hydraulic				
Max. operating pressure	[bar]	Ports P (or A) and X up to 350, port T (or B) and Y 30		
Pressure stages	[bar]	105, 210, 350		
Nominal flow	[l/min]	250	500	650
Fluid		Hydraulic oil according to DIN 51524		
Viscosity, permitted	[cSt] / [mm²/s]	20 ... 400		
recommended	[cSt] / [mm²/s]	30 ... 80		
Fluid temperature	[°C]	-20...+70 (NBR: -25...+70)		
Filtration		ISO 4406 (1999); 18/16/13		

Electrical							
Duty ratio	[%]	100 ED; CAUTION: coil temperature up to 150 °C possible					
Protection class		IP65 in accordance with EN 60529 (with correctly mounted plug-in connector)					
Code		G0R	G0Q	GAR	GAG	W30	W31
Supply voltage	[V]	12 V =	24 V =	98 V =	205 V =	110 V/50 Hz 120 V/60 Hz	230 V/50 Hz 240 V/60 Hz
Tolerance supply voltage	[%]	±10	±10	±10	±10	±5	±5
Current consumption hold	[A]	2.72	1.29	0.33	0.13	0.6 / 0.55	0.3 / 0.27
Current consumption in rush	[A]	2.72	1.29	0.33	0.13	2.5 / 2.4	1.25 / 1.2
Power consumption hold	[W]	32.7	31	31.9	28.2	70 / 70 VA	70 / 70 VA
Power consumption in rush	[W]	32.7	31	31.9	28.2	280 / 290 VA	280 / 290 VA
Solenoid connection		Connector as per EN175301-803, solenoid identification as per ISO 9461					
Wiring min.	[mm²]	3 x 1.5 recommended					
Wiring length max.	[m]	50 recommended					

p/Q performance curves [1)]

NG10

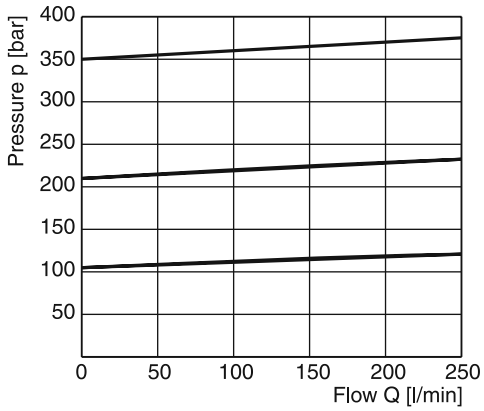

NG25

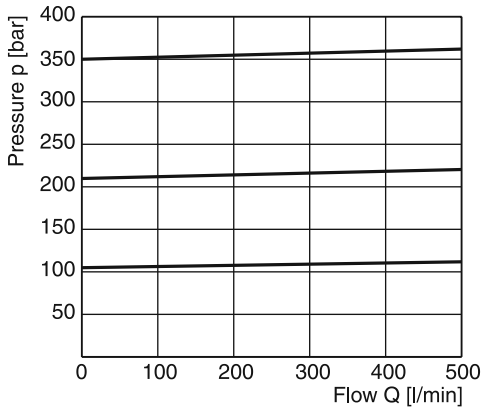

NG32

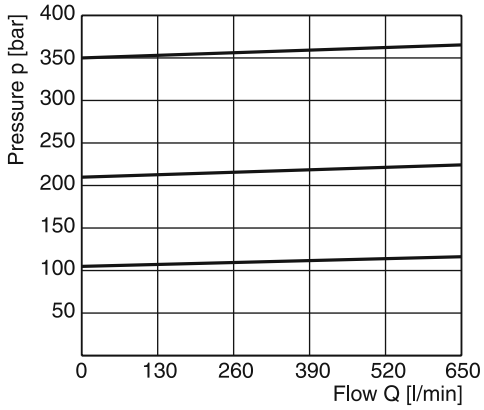

Minimum pressure curve

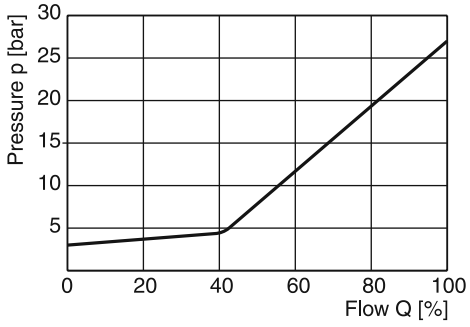

All characteristic curves measured with HLP46 at 50 °C.

[1)] The performance curves are measured with external drain.
For internal drain the tank pressure has to be added to curve.

4

R6V

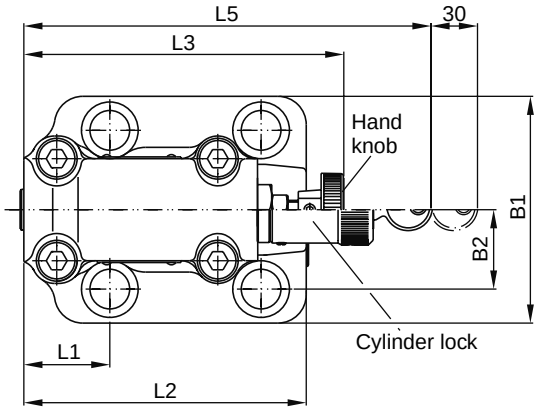

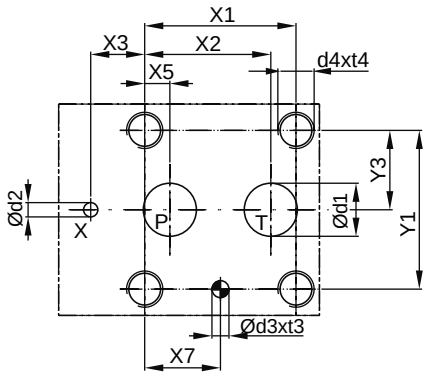

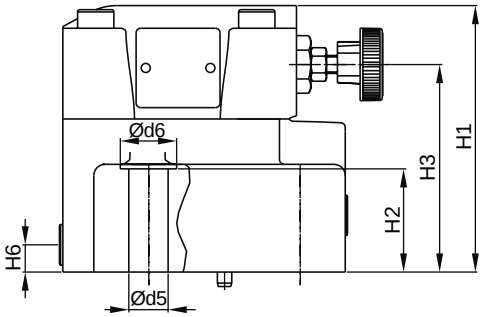

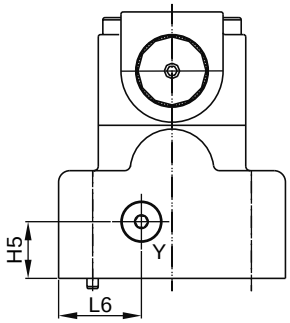

Y: external drain port G 1/8“

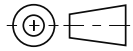

NG	ISO-code	x1	x2	x3	x4	x5	x6	x7	y1	y2	y3	y4	y5	y6
10	6264-06-09-*-97	53.8	47.5	0	–	22.1	–	22.1	53.8	–	26.9	–	–	–
25	6264-08-13-*-97	66.7	55.6	23.8	–	11.1	–	33.4	70	–	35	–	–	–
32	6264-10-17-*-97	88.9	76.2	31.8	–	12.7	–	44.5	82.6	–	41.3	–	–	–

Tolerance at X and Y pin holes and screw holes ±0.1, at port holes ±0.2.

NG	ISO-code	B1	B2	H1	H2	H3	H4	H5	H6	L1	L2	L3	L4	L5	L6
10	6264-06-09-*-97	80	26.9	114	27	88		20.5	25	52	117	141		180	29.5
25	6264-08-13-*-97	100	35	117.5	46.5	91.5	–	25	12	37.9	124.5	141	–	180	36.5
32	6264-10-17-*-97	120	41.3	124.5	51.3	98.5		26.5	13.5	44.3	153	141		180	46.5

NG	ISO-code	d1max	d2max	d3	t3	d4	t4	d5	d6	Subplate [1]
10	6264-06-09-*-97	14.7	4.8	7.5	10	M12	20	13.5	20	SPP 3R6B 910
25	6264-08-13-*-97	23.4	6.3	7.5	10	M16	27	17.5	25	SPP 6R10B 910
32	6264-10-17-*-97	32	6.3	7.5	10	M18	28	20	30	SPP 10R12B 910

NG	Kit			Kit		Surface finish
				NBR	FPM	
10	BK494	4x M12x45 ISO 4762-12.9	108 Nm ±15 %	S26-98589-0	S26-98589-5	R_{max}6.3 0.01/100
25	BK366	4x M16x70 ISO 4762-12.9	264 Nm ±15 %	S26-96396-0	S26-96396-5	
32	BK507	4x M18x75 ISO 4762-12.9	398 Nm ±15 %	S26-96392-0	S26-96392-5	

[1] Details see chapter 12, series SPP.

R4V-R6V UK.indd 17.04.2015

R6V with vent function

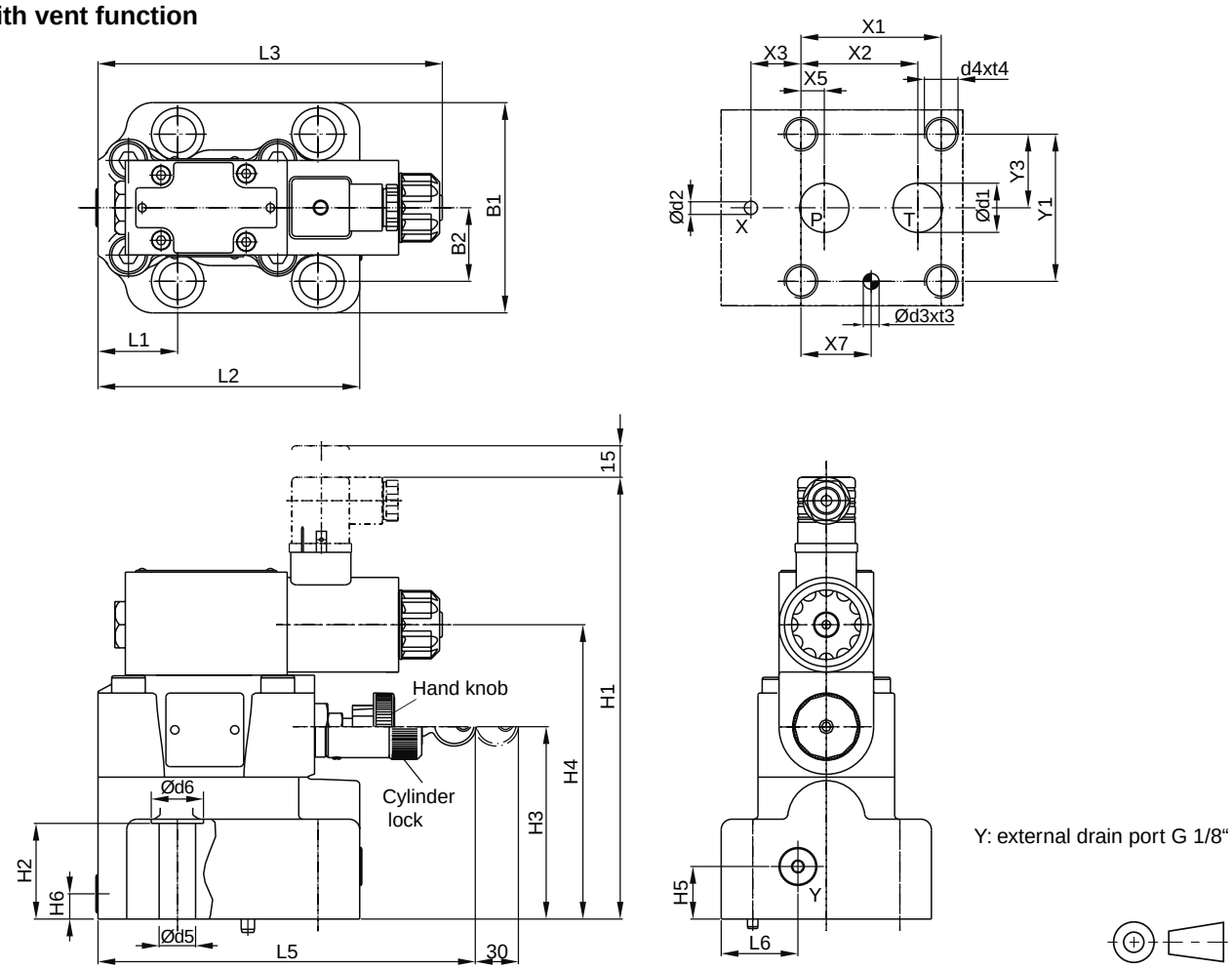

Y: external drain port G 1/8“

NG	ISO-code	x1	x2	x3	x4	x5	x6	x7	y1	y2	y3	y4	y5	y6
10	6264-06-09-*-97	53.8	47.5	0	–	22.1	–	22.1	53.8	–	26.9	–	–	–
25	6264-08-13-*-97	66.7	55.6	23.8	–	11.1	–	33.4	70	–	35	–	–	–
32	6264-10-17-*-97	88.9	76.2	31.8	–	12.7	–	44.5	82.6	–	41.3	–	–	–

Tolerance at X and Y pin holes and screw holes ±0.1, at port holes ±0.2.

NG	ISO-code	B1	B2	H1	H2	H3	H4	H5	H6	L1	L2	L3	L4	L5	L6
10	6264-06-09-*-97	80	26.9	203.4	27	88	136.3	25	12	52	117	163.8		180	36.5
25	6264-08-13-*-97	100	35	206.9	46.5	91.5	139.8	25	12	37.9	124.5	163.8	–	180	36.5
32	6264-10-17-*-97	120	41.3	213.9	51.3	98.5	146.8	25	12	44.3	153	163.8		180	36.5

NG	ISO-code	d1max	d2max	d3	t3	d4	t4	d5	d6	Subplate [1]
10	6264-06-09-*-97	14.7	4.8	7.5	10	M12	20	13.5	20	SPP 3R6B 910
25	6264-08-13-*-97	23.4	6.3	7.5	10	M16	27	17.5	25	SPP 6R10B 910
32	6264-10-17-*-97	32	6.3	7.5	10	M18	28	20	30	SPP 10R12B 910

NG	Kit			Kit		Surface finish
				NBR	FPM	
10	BK494	4x M12x45 ISO 4762-12.9	108 Nm ±15 %	S26-98589-0	S26-98589-5	R_{max}6.3 ▼ 0.01/100
25	BK366	4x M16x70 ISO 4762-12.9	264 Nm ±15 %	S26-96396-0	S26-96396-5	
32	BK507	4x M18x75 ISO 4762-12.9	398 Nm ±15 %	S26-96392-0	S26-96392-5	

[1] Details see chapter 12, series SPP.

R4V-R6V UK.indd 17.04.2015

R4V

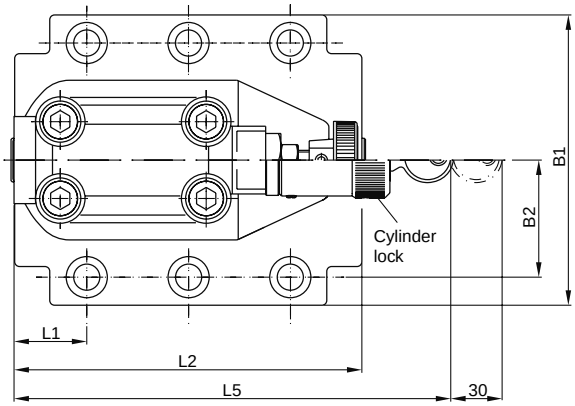

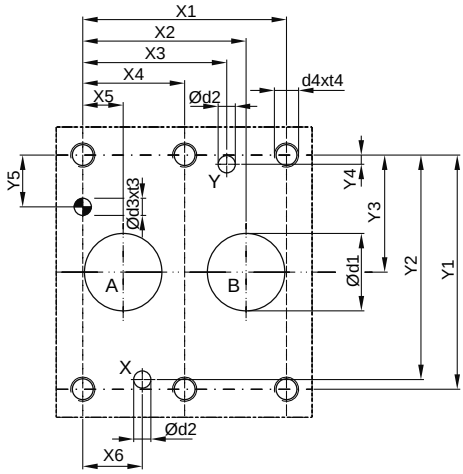

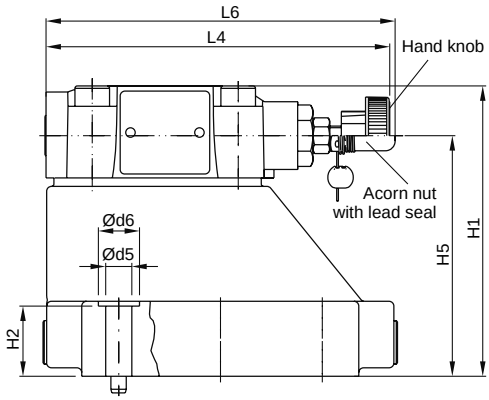

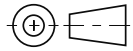

NG	ISO-code	x1	x2	x3	x4	x5	x6	x7	y1	y2	y3	y4	y5	y6
10	6264-06-07-*-97	42.9	35.8	21.5	–	7.2	21.5	0	66.7	58.8	33.4	7.9	14.3	–
25	6264-08-11-*-97	60.3	49.2	39.7	–	11.1	20.6	0	79.4	73	39.7	6.4	15.9	–
32	6264-10-15-*-97	84.2	67.5	59.5	42.1	16.7	24.6	0	96.8	92.8	48.4	3.8	21.4	–

Tolerance at X and Y pin holes and screw holes ±0.1, at port holes ±0.2.

NG	ISO-code	B1	B2	H1	H2	H3	H4	H5	H6	L1	L2	L3	L4	L5	L6
10	6264-06-07-*-97	87.3	33.35	83	21	–	–	62.5	–	25	90.8	–	143	181	144.8
25	6264-08-11-*-97	105	39.7	107.5	29	–	–	87	–	30.9	123	–	143	181	144.8
32	6264-10-15-*-97	120	48.4	120	30	–	–	99.5	–	29.8	143.5	–	143	181	144.8

NG	ISO-code	d1max	d2max	d3	t3	d4	t4	d5	d6	Subplate [1]
10	6264-06-07-*-97	15	7	7.1	8	M10	16	10.8	17	SPP 3M6B 910
25	6264-08-11-*-97	23.4	7.1	7.1	8	M10	18	10.8	17	SPP 6M8B 910
32	6264-10-15-*-97	32	7.1	7.1	8	M10	20	10.8	17	SPP 10M12B 910

NG	Kit			Kit		Surface finish
				NBR	FPM	
10	BK505	4x M10x35 ISO 4762-12.9	63 Nm ±15 %	S26-58507-0	S26-58507-5	R_{max}6.3 ▱ 0.01/100
25	BK485	4x M10x45 ISO 4762-12.9	63 Nm ±15 %	S26-58475-0	S26-58475-5	
32	BK506	6x M10x45 ISO 4762-12.9	63 Nm ±15 %	S26-58508-0	S26-58508-5	

[1] Details see chapter 12, series SPP.

R4V-R6V UK.indd 17.04.2015

R4V with vent function

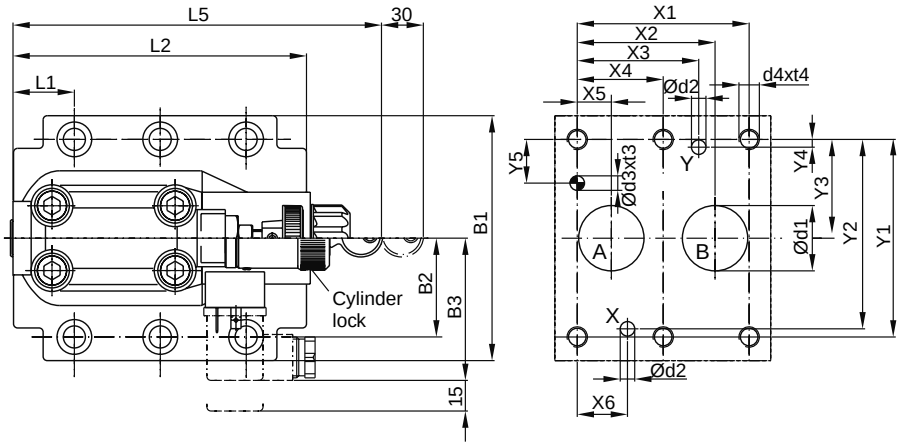

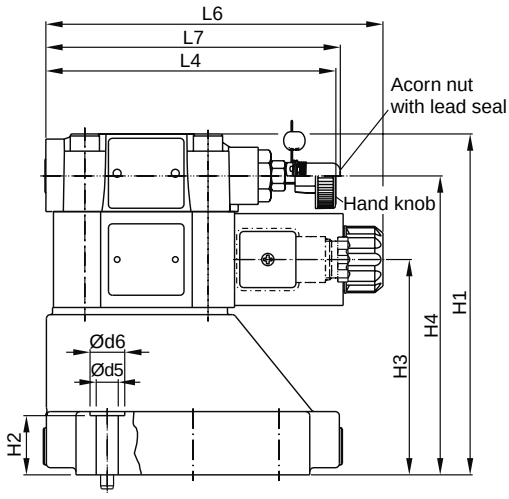

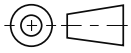

NG	ISO-code	x1	x2	x3	x4	x5	x6	x7	y1	y2	y3	y4	y5	y6
10	6264-06-07-*-97	42.9	35.8	21.5	–	7.2	21.5	0	66.7	58.8	33.4	7.9	14.3	–
25	6264-08-11-*-97	60.3	49.2	39.7	–	11.1	20.6	0	79.4	73	39.7	6.4	15.9	–
32	6264-10-15-*-97	84.2	67.5	59.5	42.1	16.7	24.6	0	96.8	92.8	48.4	3.8	21.4	–

Tolerance at X and Y pin holes and screw holes ±0.1, at port holes ±0.2.

NG	ISO-code	B1	B2	B3	H1	H2	H3	H4	H6	L1	L2	L3	L4	L5	L6	L7
10	6264-06-07-*-97	87.3	33.35	70	130	21	68.5	109.5	–	25	90.8	–	143	181	165.6	144.8
25	6264-08-11-*-97	105	39.7	70	154.5	29	93	134	–	30.9	123	–	143	181	165.6	144.8
32	6264-10-15-*-97	120	48.4	70	167	30	105.5	146.5	–	29.8	143.5	–	143	181	165.6	144.8

NG	ISO-code	d1max	d2max	d3	t3	d4	t4	d5	d6	Subplate [1]
10	6264-06-07-*-97	15	7	7.1	8	M10	16	10.8	17	SPP 3M6B 910
25	6264-08-11-*-97	23.4	7.1	7.1	8	M10	18	10.8	17	SPP 6M8B 910
32	6264-10-15-*-97	32	7.1	7.1	8	M10	20	10.8	17	SPP 10M12B 910

NG	Kit			Kit		Surface finish
				NBR	FPM	
10	BK505	4x M10x35 ISO 4762-12.9	63 Nm ±15 %	S26-58507-0 [2]	S26-58507-5 [2]	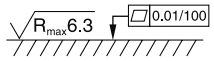
25	BK485	4x M10x45 ISO 4762-12.9	63 Nm ±15 %	S26-58475-0 [2]	S26-58475-5 [2]	
32	BK506	6x M10x45 ISO 4762-12.9	63 Nm ±15 %	S26-58508-0 [2]	S26-58508-5 [2]	
VV01, AC solenoid				S26-35237-0	S26-35237-5	
VV01, DC solenoid				S56-40609-0	S56-40609-5	

[1] Details see chapter 12, series SPP.
[2] Please combine seal kit of one size with seal kit of VV01 solenoid for complete seal kit.

R4V-R6V UK.indd 17.04.2015

Pilot operated pressure relief valves series R4V (TÜV) (DIN 24340 Form D) and R6V (TÜV) (DIN 24340 Form E) include a certification according to directive 97/23/EG for the usage for safety-related applications.

The valve is set and sealed by the German technical inspection association TÜV. The valve delivery includes the TÜV certificate of conformity.

For series R6V a vent function with a solenoid operated directional valve is available for circulation at minimum pressure.

R6V06

R6V06 with vent valve

R4V06

Features

- TÜV certificate
- Pilot operated with manual adjustment
- 2 interfaces:
  - R4V subplate ISO 6264 (DIN 24340 Form D)
  - R6V subplate ISO 6264 (DIN 24340 Form E) with CETOP 03 vent valve
- Adjustment leaded (code W)
- Adjustment leaded to maximum pressure, lower pressure possible (code V)

Name plate data

Example R4V06

415 mm² :	minimum opening width
L220 l/min :	max. flow
70 bar :	set pressure (compare p/Q curves)
7,3 mm :	cartridge stroke
10 % :	permitted pressure increase of the flow range

R4V06

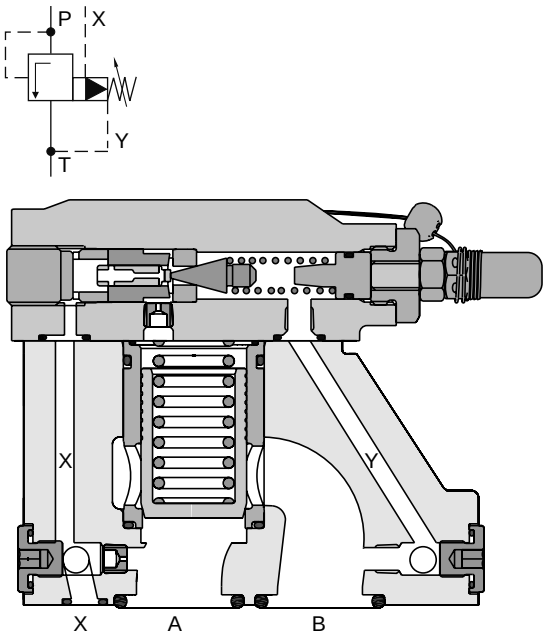

R6V06 with vent valve

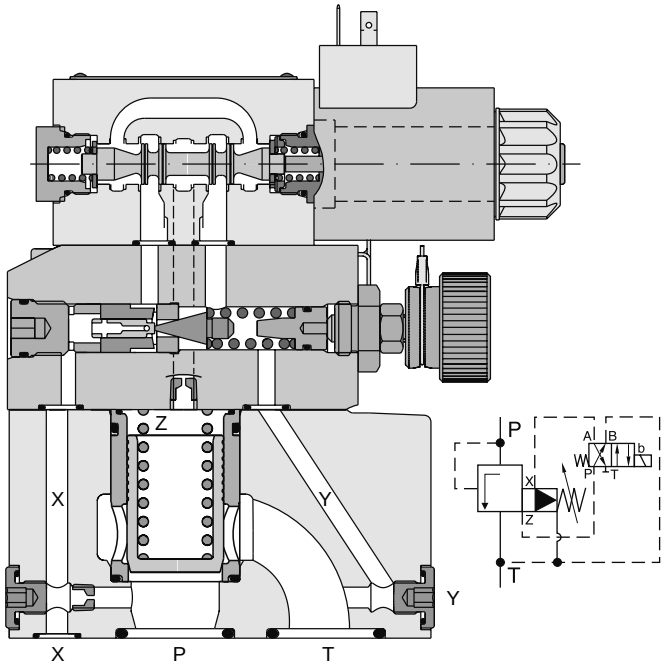

R4V / R6V

R		V		-	5		5		0			
Pressure valve	Interface	Relief function	Nominal size		Max. pressure (350 bar)	Body	Pressure setting range 350 bar max.	Adjustment leaded (TÜV)	Pilot oil internal	Design series	Seals	Pressure stage

Code	Interface		
4	Subplate mounting ISO 6264	NG10 and 25	NG32
6			

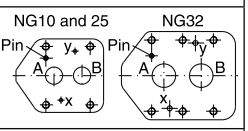

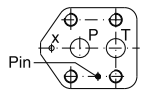

Code	Nominal size
03	NG10
06	NG25
10	NG32

Code	Body
3	R4V
9	R6V

Code	Pressure stage [1]
P10	100 bar
P20	200 bar
P30	300 bar
P35	350 bar

Code	Seals
1	NBR
5	FPM

Code	Design
A	R4V
B	R6V

Code	Adjustment
V	Hand knob leaded (lower pressure adjustment possible)
W	Acorn nut leaded

R6V with vent valve

R	6	V		-	5	9	5	V	0	09		B		
Pressure valve	Interface	Relief function	Nominal size		Max. pressure (350 bar)	Body Y-port = G 1/8“	Pressure setting range 350 bar max.	Adjustment leaded (TÜV) Hand knob leaded (lower pressure adjustment possible)	Pilot oil internal	Vent valve function solenoid not active, unpressurized circulation	Solenoid voltage	Design series	Seals	Pressure stage

Code	Interface	
6	Subplate mounting ISO 6264	

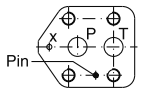

Code	Nominal size
03	NG10
06	NG25
10	NG32

Code	Pressure stage [1]
P10	100 bar
P20	200 bar
P30	300 bar
P35	350 bar

Code	Seals
1	NBR
5	FPM

Code	Voltage
G0R	12 V =
G0Q	24 V =

[1] Further pressure stages on request (in 10 bar steps).

R4V-R6V TUEV UK.indd RH 17.04.2015

4

R4V / R6V

General				
Nominal size		**NG10**	**NG25**	**NG32**
Interface		Subplate mounting acc. ISO 6264 (DIN 24340)		
Mounting position		Unrestricted, horizontal mounting preferred		
Ambient temperature	[°C]	-20...+60		
$MTTF_D$ value	[years]	75		
Weight Series R6V	[kg]	4.5	5.8	7.8
Weight Series R4V	[kg]	2.7	4.5	6.0
Hydraulic				
Max. operating pressure	[bar]	Ports P (or A) up to 350, Port T (or B) 30		
Pressure stages	[bar]	350 (pressure setting see ordering code)		
Nominal flow R6V	[l/min]	250	500	500
Nominal flow R4V	[l/min]	110	450	500
Fluid		Hydraulic oil according to DIN 51524		
Fluid temperature	[°C]	-20...+70 (NBR: -25...+70)		
Viscosity, permitted	[cSt] / [mm²/s]	20 ... 400		
Viscosity, recommended	[cSt] / [mm²/s]	30 ... 80		
Filtration		ISO 4406 (1999); 18/16/13		

R6V with vent function

General				
Nominal size		**NG10**	**NG25**	**NG32**
Interface		Subplate mounting acc. ISO 6264 (DIN 24340)		
Mounting position		Unrestricted, horizontal mounting preferred		
Ambient temperature	[°C]	-20...+80		
$MTTF_D$ value	[years]	75		
Weight	[kg]	5.9	7.2	9.2
Hydraulic				
Max. operating pressure	[bar]	Ports P (or A) up to 350, port T (or B) 30		
Pressure stages	[bar]	350 (pressure setting see ordering code)		
Nominal flow	[l/min]	250	500	500
Fluid		Hydraulic oil according to DIN 51524		
Viscosity, recommended	[cSt] / [mm²/s]	30 ... 50		
Viscosity, permitted	[cSt] / [mm²/s]	20 ... 380		
Fluid temperature	[°C]	-20 ... +70		
Filtration		ISO 4406 - (1999) ; 18/16/13		
Electrical				
Duty ratio	[%]	100 ED; CAUTION: coil temperature up to 150 °C possible		
Protection class		IP65 in accordance with EN 60529 (with correctly mounted plug-in connector)		
Code		G0R	G0Q	
Supply voltage	[V]	12 V =	24 V =	
Tolerance supply voltage	[%]	±10	±10	
Power consumption hold	[W]	32.7	31	
Power consumption in rush	[W]	32.7	31	
Solenoid connection		Connector as per EN 175301-803		
Wiring min.	[mm²]	3 x 1.5 recommended		
Wiring length max.	[m]	50 recommended		

R4V/ R6V minimum pressure curve [1)]

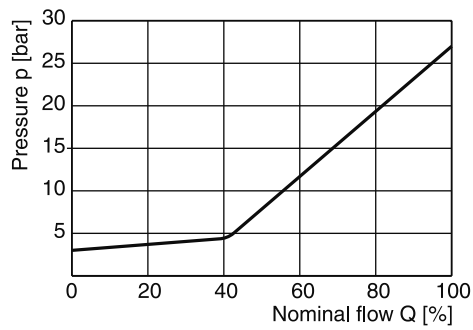

All characteristic curves measured with HLP46 at 50 °C.

1) The performance curves are measured with external drain.
For internal drain the tank pressure has to be added to curve.

R4V-R6V TUEV UK.indd RH 17.04.2015

p/Q performance curves [1)]

R4V03

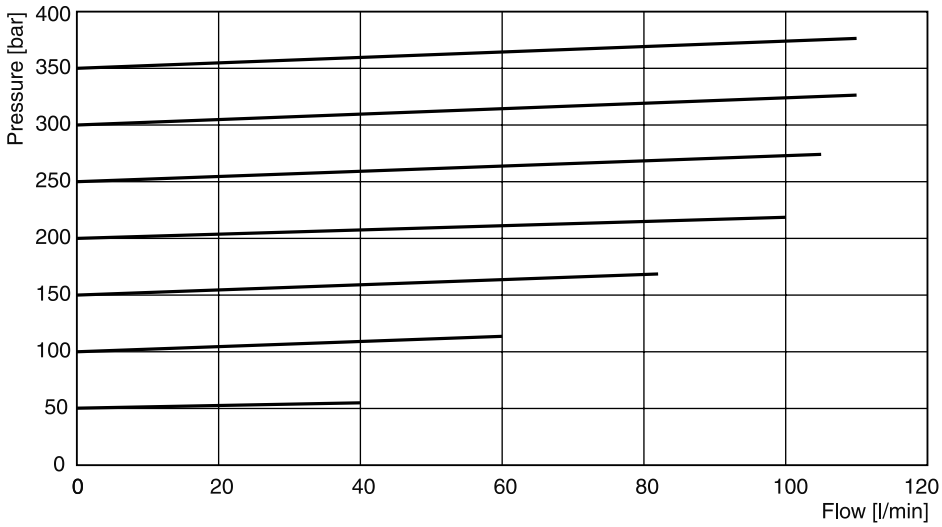

R4V03 nameplate data

Pressure stage	Q_{max}	min. opening width	Cartridge stroke	Permitted pressure increase
50- 70 bar	40 l/min	154 mm²	4.4 mm	10 %
80- 120 bar	60 l/min	154 mm²	4.4 mm	10 %
130- 170 bar	82 l/min	154 mm²	4.4 mm	10 %
180- 200 bar	100 l/min	154 mm²	4.4 mm	10 %
210- 250 bar	105 l/min	154 mm²	4.4 mm	10 %
260- 300 bar	110 l/min	154 mm²	4.4 mm	10 %
310- 350 bar	110 l/min	154 mm²	4.4 mm	10 %

R4V06

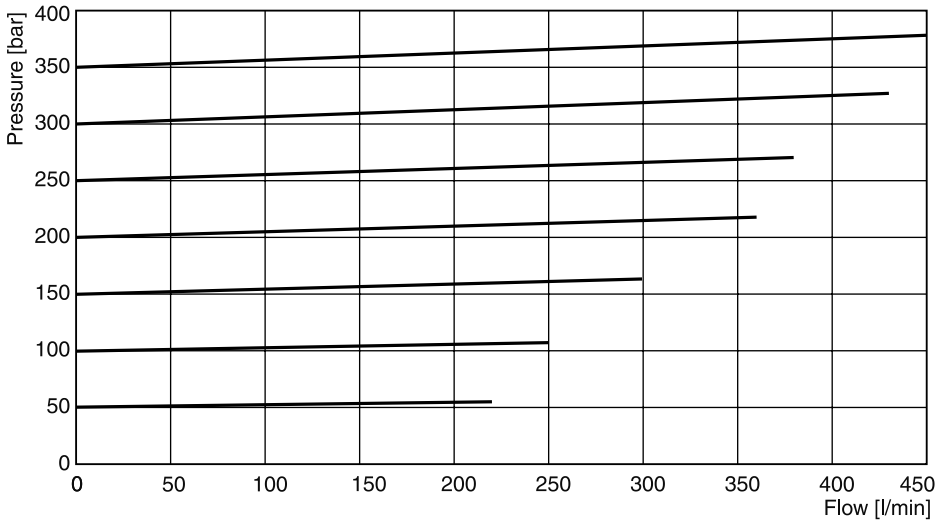

R4V06 nameplate data

Pressure stage	Q_{max}	min. opening width	Cartridge stroke	Permitted pressure increase
50- 70 bar	220 l/min	415 mm²	7.3 mm	10 %
80- 120 bar	250 l/min	415 mm²	7.3 mm	10 %
130- 170 bar	300 l/min	415 mm²	7.3 mm	10 %
180- 200 bar	360 l/min	415 mm²	7.3 mm	10 %
210- 250 bar	380 l/min	415 mm²	7.3 mm	10 %
260- 300 bar	430 l/min	415 mm²	7.3 mm	10 %
310- 350 bar	450 l/min	415 mm²	7.3 mm	10 %

[1)] The performance curves are measured with external drain.
For internal drain the tank pressure has to be added to curve.

4

p/Q performance curves [1)]

R4V10

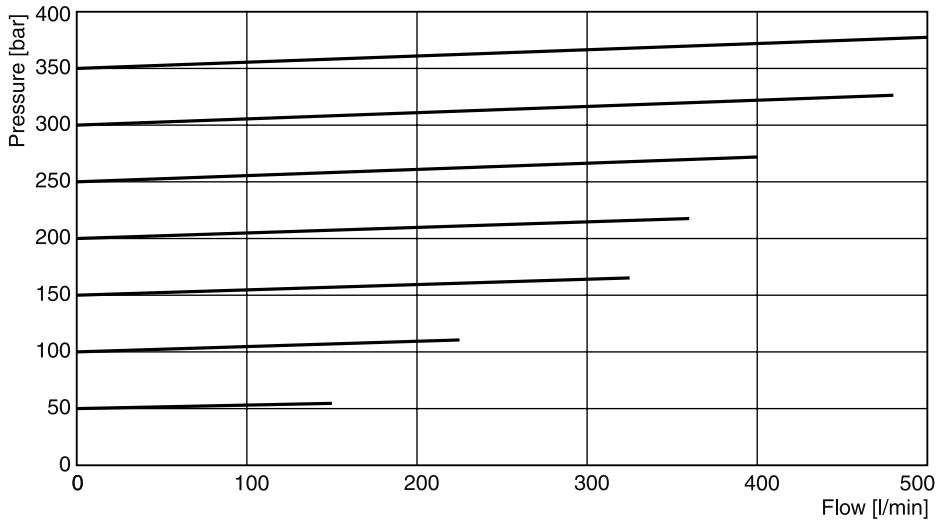

R4V10 nameplate data

Pressure stage	Q_{max}	min. opening width	Cartridge stroke	Permitted pressure increase
50- 70 bar	150 l/min	607 mm²	7.3 mm	10 %
80- 120 bar	225 l/min	607 mm²	7.3 mm	10 %
130- 170 bar	325 l/min	607 mm²	7.3 mm	10 %
180- 200 bar	360 l/min	607 mm²	7.3 mm	10 %
210- 250 bar	400 l/min	607 mm²	7.3 mm	10 %
260- 300 bar	480 l/min	607 mm²	7.3 mm	10 %
310- 350 bar	500 l/min	607 mm²	7.3 mm	10 %

R6V03

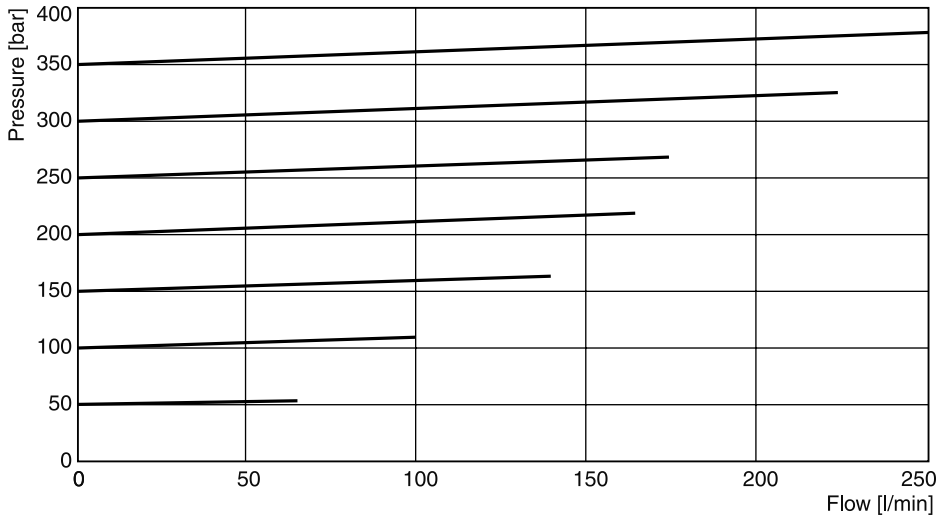

R6V03 nameplate data

Pressure stage	Q_{max}	min. opening width	Cartridge stroke	Permitted pressure increase
50- 70 bar	65 l/min	154 mm²	4.4 mm	10 %
80- 120 bar	100 l/min	154 mm²	4.4 mm	10 %
130- 170 bar	140 l/min	154 mm²	4.4 mm	10 %
180- 200 bar	165 l/min	154 mm²	4.4 mm	10 %
210- 250 bar	170 l/min	154 mm²	4.4 mm	10 %
260- 300 bar	225 l/min	154 mm²	4.4 mm	10 %
310- 350 bar	250 l/min	154 mm²	4.4 mm	10 %

[1)] The performance curves are measured with external drain.
For internal drain the tank pressure has to be added to curve.

p/Q performance curves [1)]

R6V06

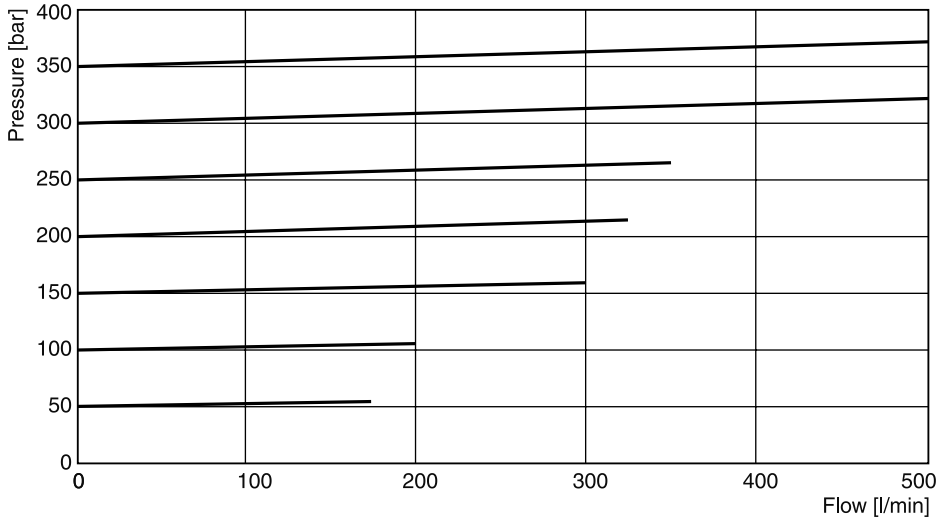

R6V06 nameplate data

Pressure stage	Q_{max}	min. opening width	Cartridge stroke	Permitted pressure increase
50- 70 bar	170 l/min	415 mm²	7.3 mm	10 %
80- 120 bar	200 l/min	415 mm²	7.3 mm	10 %
130- 170 bar	300 l/min	415 mm²	7.3 mm	10 %
180- 200 bar	325 l/min	415 mm²	7.3 mm	10 %
210- 250 bar	350 l/min	415 mm²	7.3 mm	10 %
260- 300 bar	500 l/min	415 mm²	7.3 mm	10 %
310- 350 bar	500 l/min	415 mm²	7.3 mm	10 %

R6V10

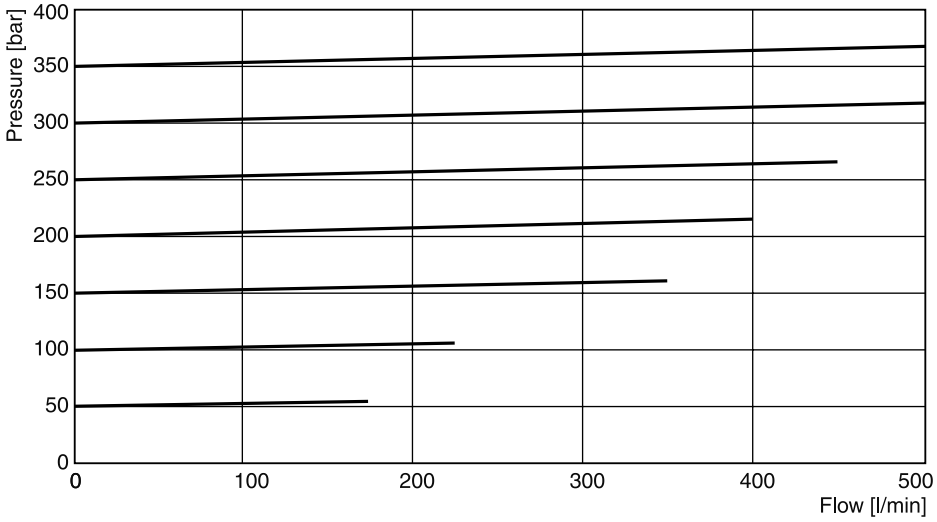

R6V10 nameplate data

Pressure stage	Q_{max}	min. opening width	Cartridge stroke	Permitted pressure increase
50- 70 bar	170 l/min	607 mm²	7.3 mm	10 %
80- 120 bar	225 l/min	607 mm²	7.3 mm	10 %
130- 170 bar	350 l/min	607 mm²	7.3 mm	10 %
180- 200 bar	400 l/min	607 mm²	7.3 mm	10 %
210- 250 bar	450 l/min	607 mm²	7.3 mm	10 %
260- 300 bar	500 l/min	607 mm²	7.3 mm	10 %
310- 350 bar	500 l/min	607 mm²	7.3 mm	10 %

[1)] The performance curves are measured with external drain.
For internal drain the tank pressure has to be added to curve.

4

R6V

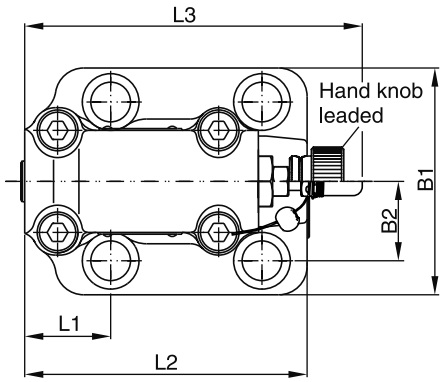

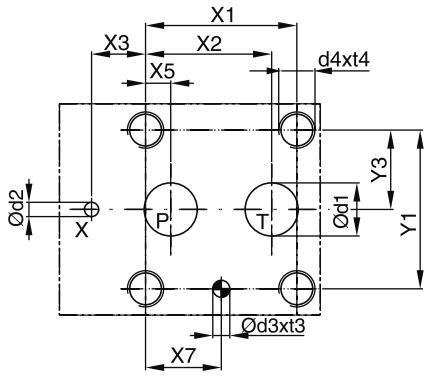

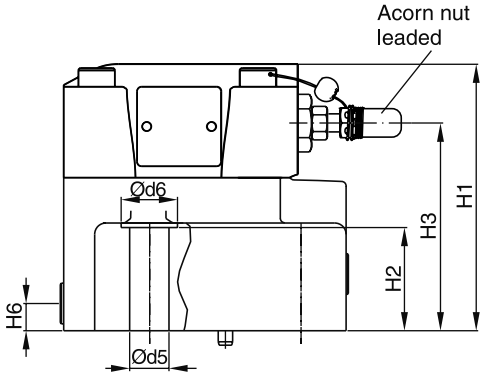

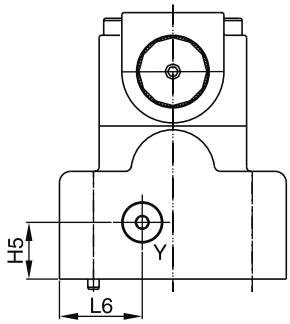

Y: external drain port G 1/8“

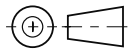

NG	ISO-code	x1	x2	x3	x4	x5	x6	x7	y1	y2	y3	y4	y5	y6
10	6264-06-09-*-97	53.8	47.5	0	–	22.1	–	22.1	53.8	–	26.9	–	–	–
25	6264-08-13-*-97	66.7	55.6	23.8	–	11.1	–	33.4	70	–	35	–	–	–
32	6264-10-17-*-97	88.9	76.2	31.8	–	12.7	–	44.5	82.6	–	41.3	–	–	–

Tolerance at X and Y pin holes and screw holes ±0.1, at port holes ±0.2.

NG	ISO-code	B1	B2	H1	H2	H3	H4	H5	H6	L1	L2	L3	L4	L6
10	6264-06-09-*-97	80	26.9	114	27	88		20.5	25	52	117	148.3		29.5
25	6264-08-13-*-97	100	35	117.5	46.5	91.5	–	25	12	37.9	124.5	148.3	–	36.5
32	6264-10-17-*-97	120	41.3	124.5	51.3	98.5		26.5	13.5	44.3	153	148.3		46.5

NG	ISO-code	d1max	d2max	d3	t3	d4	t4	d5	d6	Subplate [1]
10	6264-06-09-*-97	14.7	4.8	7.5	10	M12	20	13.5	20	SPP 3R6B 910
25	6264-08-13-*-97	23.4	6.3	7.5	10	M16	27	17.5	25	SPP 6R10B 910
32	6264-10-17-*-97	32	6.3	7.5	10	M18	28	20	30	SPP 10R12B 910

NG	Bolt kit			Kit		Surface finish
				NBR	FPM	
10	BK494	4x M12x45 ISO 4762-12.9	108 Nm ±15 %	S26-98589-0	S26-98589-5	R_{max}6.3 0.01/100
25	BK366	4x M16x70 ISO 4762-12.9	264 Nm ±15 %	S26-96396-0	S26-96396-5	
32	BK507	4x M18x75 ISO 4762-12.9	398 Nm ±15 %	S26-96392-0	S26-96392-5	

[1] Details see chapter 12, series SPP.

R4V-R6V TUEV UK.indd RH 17.04.2015

R6V with vent function

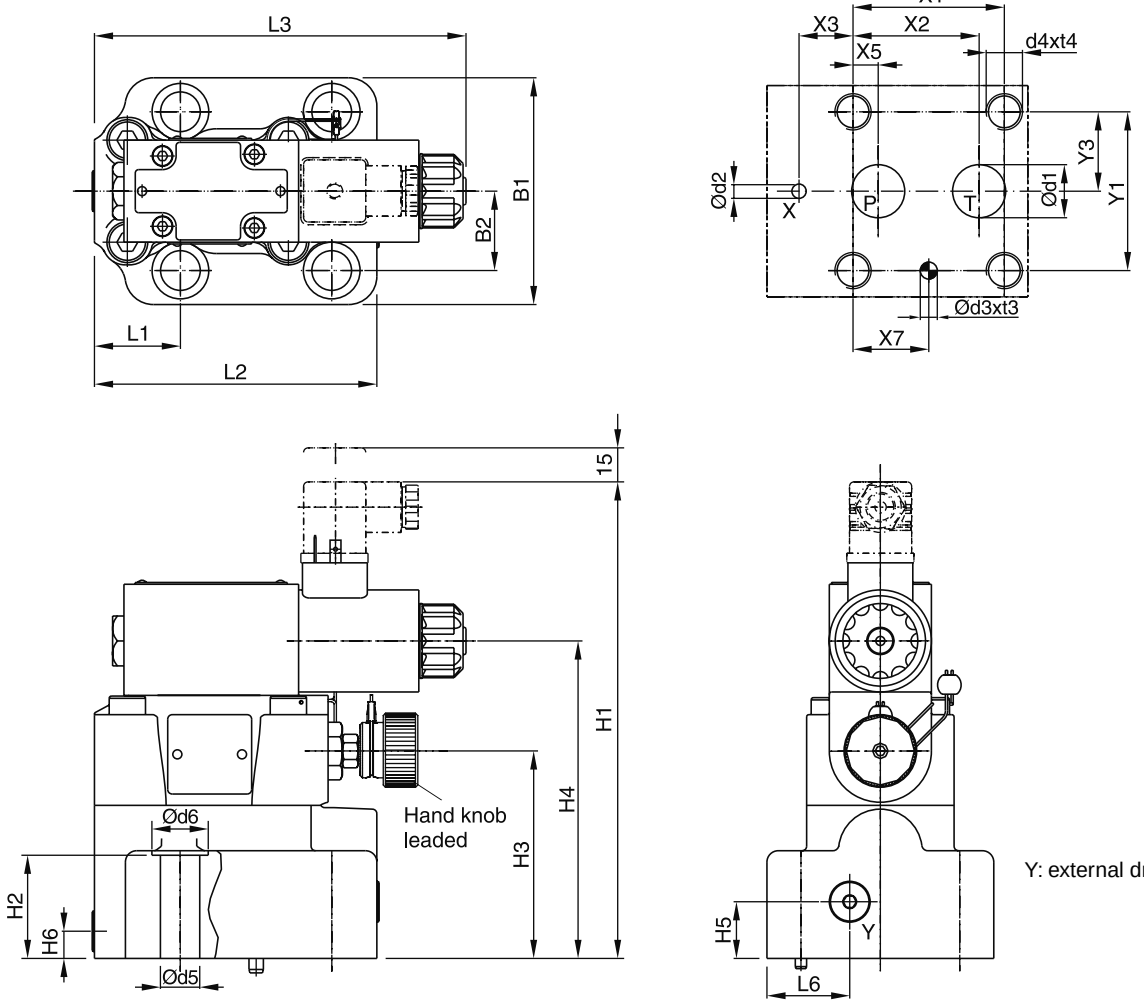

Y: external drain port G 1/8“

NG	ISO-code	x1	x2	x3	x4	x5	x6	x7	y1	y2	y3	y4	y5	y6
10	6264-06-09-*-97	53.8	47.5	0	–	22.1	–	22.1	53.8	–	26.9	–	–	–
25	6264-08-13-*-97	66.7	55.6	23.8	–	11.1	–	33.4	70	–	35	–	–	–
32	6264-10-17-*-97	88.9	76.2	31.8	–	12.7	–	44.5	82.6	–	41.3	–	–	–

Tolerance at X and Y pin holes and screw holes ±0.1, at port holes ±0.2.

NG	ISO-code	B1	B2	H1	H2	H3	H4	H5	H6	L1	L2	L3	L4	L6
10	6264-06-09-*-97	80	26.9	203.4	27	88	136.3	25	12	52	117	163.8		36.5
25	6264-08-13-*-97	100	35	206.9	46.5	91.5	139.8	25	12	37.9	124.5	163.8	–	36.5
32	6264-10-17-*-97	120	41.3	213.9	51.3	98.5	146.8	25	12	44.3	153	163.8		36.5

NG	ISO-code	d1max	d2max	d3	t3	d4	t4	d5	d6	Subplate [1]
10	6264-06-09-*-97	14.7	4.8	7.5	10	M12	20	13.5	20	SPP 3R6B 910
25	6264-08-13-*-97	23.4	6.3	7.5	10	M16	27	17.5	25	SPP 6R10B 910
32	6264-10-17-*-97	32	6.3	7.5	10	M18	28	20	30	SPP 10R12B 910

NG	Bolt kit			Kit		Surface finish
				NBR	FPM	
10	BK494	4x M12x45 ISO 4762-12.9	108 Nm ±15 %	S26-98589-0	S26-98589-5	R_{max}6.3 ▱ 0.01/100
25	BK366	4x M16x70 ISO 4762-12.9	264 Nm ±15 %	S26-96396-0	S26-96396-5	
32	BK507	4x M18x75 ISO 4762-12.9	398 Nm ±15 %	S26-96392-0	S26-96392-5	

[1] Details see chapter 12, series SPP.

R4V-R6V TUEV UK.indd RH 17.04.2015

4

R4V

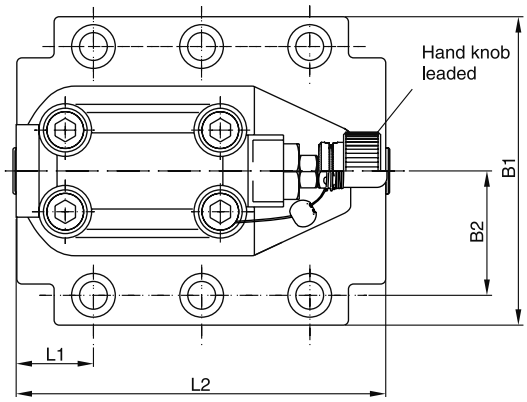

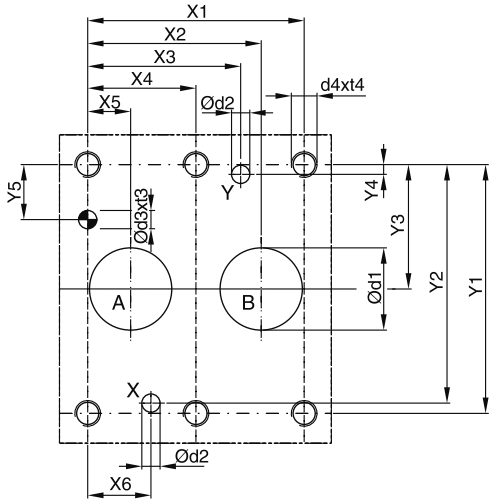

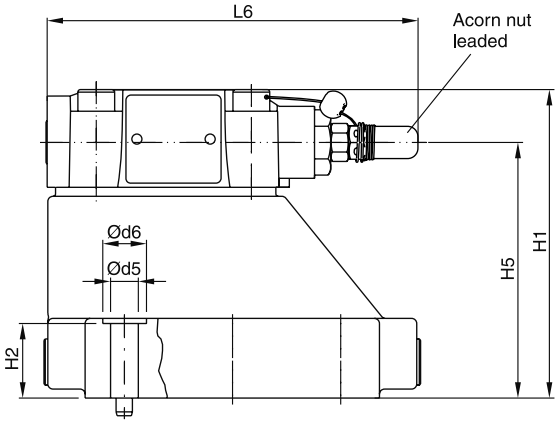

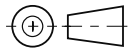

NG	ISO-code	x1	x2	x3	x4	x5	x6	x7	y1	y2	y3	y4	y5	y6
10	6264-06-07-*-97	42.9	35.8	21.5	–	7.2	21.5	0	66.7	58.8	33.4	7.9	14.3	–
25	6264-08-11-*-97	60.3	49.2	39.7	–	11.1	20.6	0	79.4	73	39.7	6.4	15.9	–
32	6264-10-15-*-97	84.2	67.5	59.5	42.1	16.7	24.6	0	96.8	92.8	48.4	3.8	21.4	–

Tolerance at X and Y pin holes and screw holes ±0.1, at port holes ±0.2.

NG	ISO-code	B1	B2	H1	H2	H3	H4	H5	H6	L1	L2	L3	L6
10	6264-06-07-*-97	87.3	33.35	83	21	–	–	62.5	–	25	90.8	–	144.8
25	6264-08-11-*-97	105	39.7	107.5	29	–	–	87	–	30.9	123	–	144.8
32	6264-10-15-*-97	120	48.4	120	30	–	–	99.5	–	29.8	143.5	–	144.8

NG	ISO-code	d1max	d2max	d3	t3	d4	t4	d5	d6	Subplate [1]
10	6264-06-07-*-97	15	7	7.1	8	M10	16	10.8	17	SPP 3M6B 910
25	6264-08-11-*-97	23.4	7.1	7.1	8	M10	18	10.8	17	SPP 6M8B 910
32	6264-10-15-*-97	32	7.1	7.1	8	M10	20	10.8	17	SPP 10M12B 910

NG	Bolt kit			Kit		Surface finish
				NBR	FPM	
10	BK505	4x M10x35 ISO 4762-12.9	63 Nm ±15 %	S26-58507-0	S26-58507-5	R_{max}6.3 ▱ 0.01/100
25	BK485	4x M10x45 ISO 4762-12.9	63 Nm ±15 %	S26-58475-0	S26-58475-5	
32	BK506	6x M10x45 ISO 4762-12.9	63 Nm ±15 %	S26-58508-0	S26-58508-5	

[1] Details see chapter 12, series SPP.

R4V-R6V TUEV UK.indd RH 17.04.2015

Pressure relief valves of the series RE06M*W are direct operated proportional valves typically used as remote control valves for flow rates below 3 l/min.

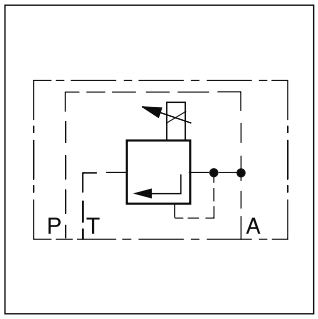

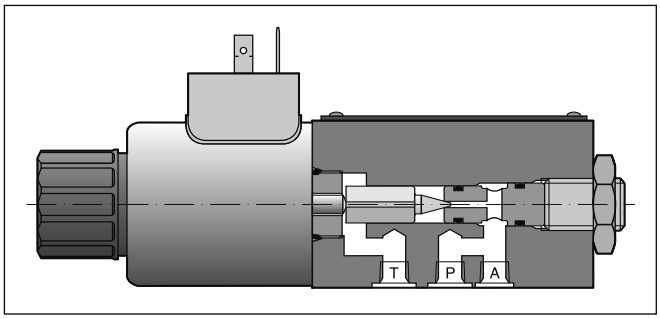

Function

When the pressure in port P or A exeeds the pressure setting at the solenoid, the cone opens to port T and limits the pressure in port P to the adjusted level.
The optimum performance can be achieved in combination with the digital amplifier module PCD00A-400.

Also available as sandwich valve, see Chapter 8, Pilot valves series RPDM.

Valve conform to ATEX Ex e mb II see catalogue HY11-3343.
Download: www.parker.com/euro_hcd - see “Literature”

Features

- Direct operated with proportional solenoid
- Very low pressure adjustment of p_{min}
- 2 pressure ports, A and P
- Subplate mounting according to ISO 6264
- 4 pressure stages

Ordering Code

RE	06	M		W	2		1		W	
Proportional pressure relief valve	**NG06**	**Interface ISO 6264**	**Pressure stage**	**External electronics**		**Seals**	**Normally open**	**Solenoid voltage**	**Plug connection EN 175301-803**	**Design series** (not required for ordering)

Code	Pressure stage
10	up to 105 bar
17	**up to 175 bar**
25	up to 250 bar
35	**up to 350 bar**

Code	Solenoid voltage
K	**12 V, 2.5 A**
X	16 V, 1.3 A

Code	Seals
N	NBR
V	**FPM**

Bold letters =
Short-term availability

4

General		
Nominal size		DIN NG06 / CETOP 03 / NFPA D03
Interface		Subplate mounting according to ISO 6264
Mounting position		Unrestricted, horizontal mounting preferred
Ambient temperature	[°C]	-20 ... +60
$MTTF_D$ value	[years]	150
Weight	[kg]	1.8
Hydraulic		
Max. operating pressure	[bar]	Ports P and A up to 350; port T 30
Pressure stages	[bar]	105, 175, 250, 350
Nominal flow	[l/min]	See p/Q curves
Fluid		Hydraulic oil according to DIN 51524
Viscosity, permitted recommended	[cSt] / [mm²/s] [cSt] / [mm²/s]	20 ... 400 30 ... 80
Fluid temperature	[°C]	-20...+70 (NBR: -25...+70)
Filtration		ISO 4406 (1999); 18/16/13
Linearity	[%]	±2.8
Repeatability	[%]	<±1
Hysteresis	[%]	±1.5 of p_{max}
Electrical		
Duty ratio	[%]	100 ED
Protection class		IP65 in accordance with EN 60529 (with correctly mounted plug-in connector)
Nominal voltage	[V]	12 (2.5 A max. current), 16 (1.3 A max. current)
Coil resistance at 20 °C	[Ohm]	4.28 (at 12 V), 12 (at 16 V)
Solenoid connection		Connector as per EN 175301-803
Power amplifier, recommended		PCD00A-400

p/Q curves
Pressure stage 105 bar

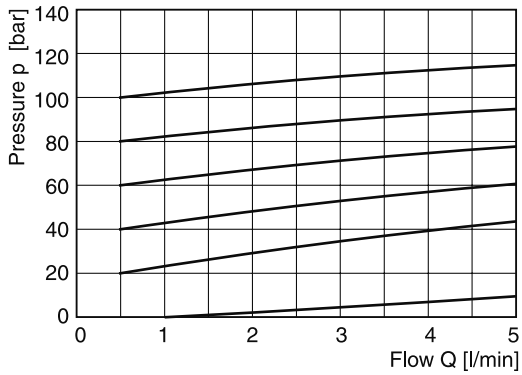

Pressure stage 350 bar

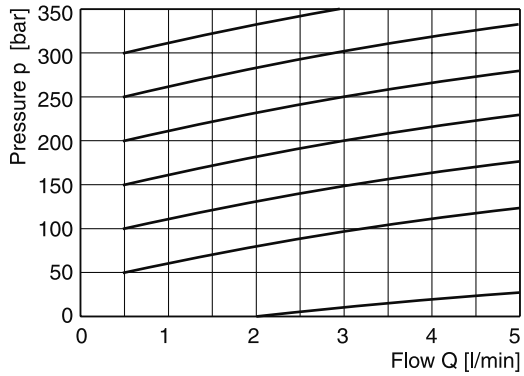

Min. adjusted pressure
Pressure stage 105 bar

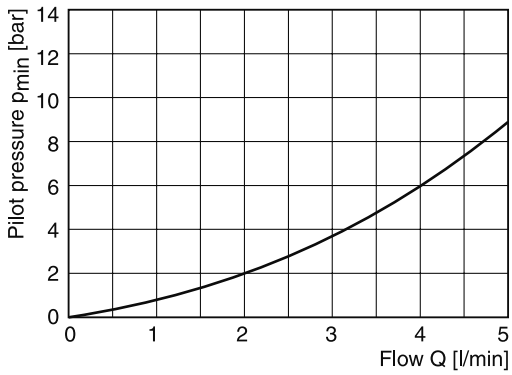

Pressure stage 350 bar

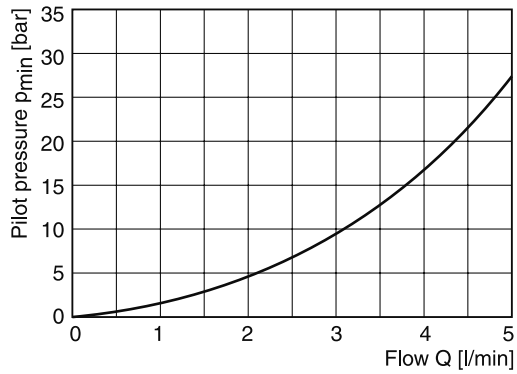

Pressure/signal curve
Pressure stage 105 bar

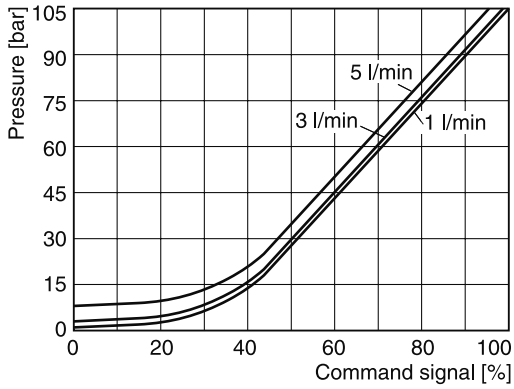

Pressure stage 350 bar

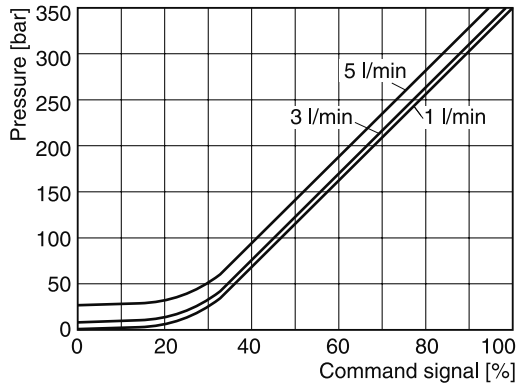

All characteristic curves measured with HLP46 at 50 °C.

4

RE06M*W

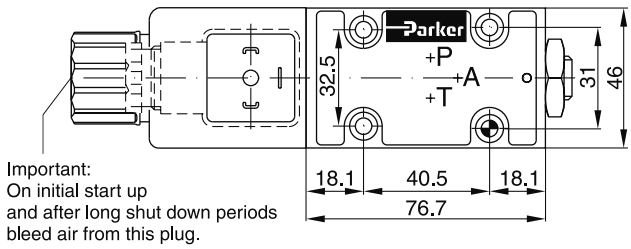

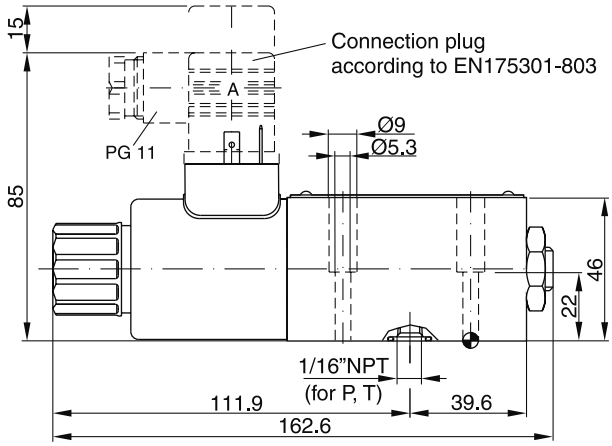

Surface finish	Bolt kit			Kit NBR	Kit FPM
R_{max}6.3 ▱ 0.01/100	BK375	4x M5x30 ISO 4762-12.9	7.6 Nm ±15 %	SK-RE06MWN	SK-RE06MWV

Mounting pattern ISO 6264-03-04-*-97

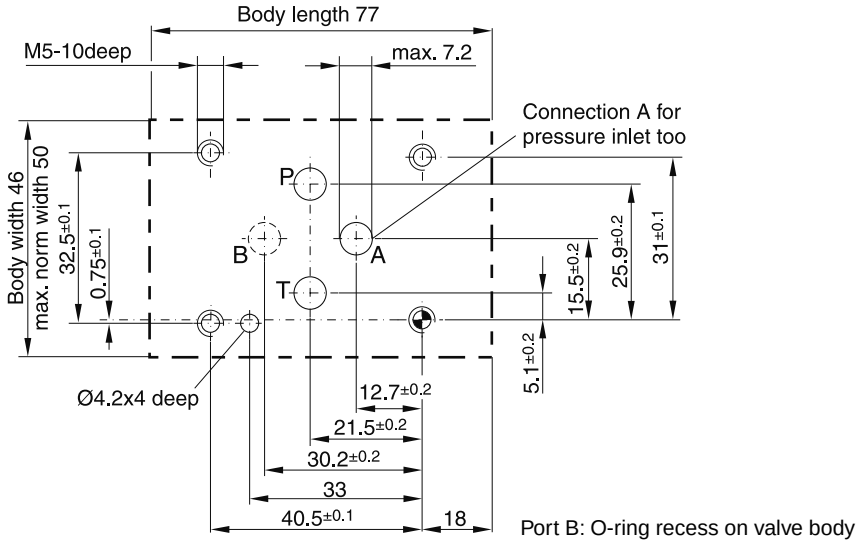

RE06MW UK.indd RH 17.04.2015

The proportional pressure relief valve series RE06M*T (NG06) with onboard electronics is based on the functionality of the digital amplifier PCD00.
The digital onboard electronics is situated in a robust metal housing and can be used in rough environments. The nominal values of the valves are factory set. Additionally the ProPxD software permits the editing of all parameters. The software is also used for the digital electronic modules. The cable for connection to a serial RS232C interface is available as accessory.

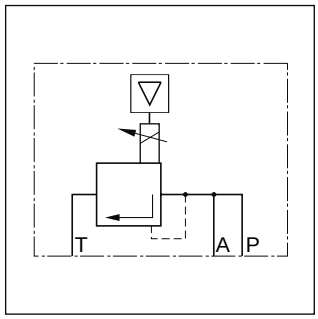

The electrical connection is available in 2 options:
Code F: 6 + PE central connection
+/- 10 V command signal
+10 V reference voltage output
Code R: 6 + PE central connection
4…20 mA command signal

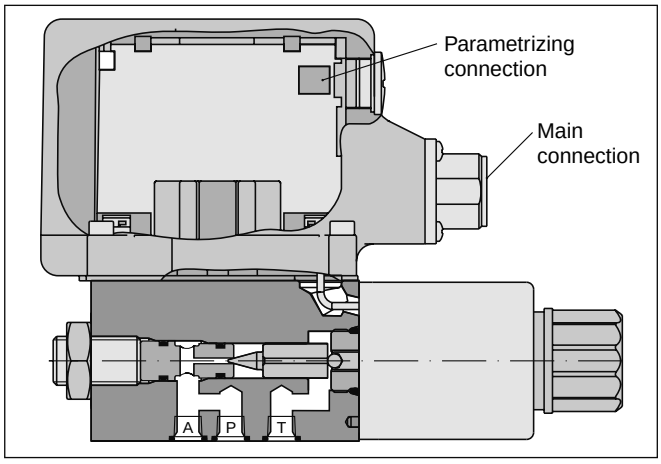

Function

When the pressure in port P or A exeeds the pressure setting at the solenoid, the cone opens to port T and limits the inlet pressure to the adjusted level.

The pressure adjustment is effected by applying current to the solenoid. The control signal is modulated to the solenoid current by the electronics.

Features

- Direct operated with proportional solenoid
- Onboard electronics
- Very low pressure adjustment of p_{min}
- Subplate mounting acc. to ISO 6264
- 6 pressure stages
- 2 pressure inlet ports A and P

Ordering code

RE	06	M		T	2		1		0	
Proportional pressure relief valve	**NG06**	**Interface ISO 6264**	**Pressure stages**	**Onboard electronics**		**Seals**	**Normally open**	**Command signal**	**Electronic attachment**	**Design series** (not required for ordering)

Code	Pressure stages
05	50 bar
10	105 bar
17	**175 bar**
21	**210 bar**
25	250 bar
35	**350 bar**

Code	Command signal
F	**Voltage input 0...+10 V with reference output +10 V**
R	Current input 4...20 mA

Code	Seals
N	NBR
V	**FPM**

Bold letters =
Short-term availability

Please order plugs separately, see chapter 4, accessories.
Parametrizing cable OBE → RS232, Item no. 40982923

RE06MT UK.indd RH 17.04.2015

4

General		
Nominal size		DIN NG06 / CETOP 03 / NFPA D03
Interface		Subplate mounting according to ISO 6264
Mounting position		Unrestricted, horizontal mounting preferred
Ambient temperature	[°C]	-20...+60
$MTTF_D$ value [1]	[years]	150
Weight	[kg]	2.2
Vibration strength	[g]	10 sinus 5...2000 Hz acc. to IEC 68-2-6 30 noise 20...2000 Hz acc. to IEC 68-2-36 15 shock acc. to IEC 68-2-27
Hydraulic		
Max. operating pressure	[bar]	Ports A and P 350, connection T 30
Pressure stages	[bar]	50, 105, 175, 210, 250, 350
Nominal flow	[l/min]	See p/Q curves
Fluid		Hydraulic oil according to DIN 51524
Viscosity, permitted recommended	[cSt] / [mm²/s] [cSt] / [mm²/s]	20 ... 400 30 ... 80
Fluid temperature	[°C]	-20...+70 (NBR: -25...+70)
Filtration		ISO 4406 (1999); 18/16/13
Linearity	[%]	See curve
Repeatability	[%]	<±1
Hysteresis	[%]	±1.5 of p_{max}
Electrical		
Duty ratio ED	[%]	100
Supply voltage	[VDC]	18...30, ripple < 5 % eff., surge free
Current consumption max.	[A]	2.0
Pre-fusing	[A]	2.5 medium lag
Potentiometer supply	[V]	+10 / ±5 % max. 10 mA
Command signal Code F voltage Code R current	 [V] [mA]	 0...+10, ripple < 0.01 % eff., surge free, Ri = 100 kOhm 4...20, ripple < 0.01 % eff., surge free, Ri = 200 Ohm < 3.6 mA = enable off, > 3.8 mA = enable on (acc. NAMUR NE43)
Differential input voltage max.	[V] [V]	30 for terminal D and E against PE (terminal G) 11 for terminal D and E against 0V (terminal B)
Adjustment ranges Min current Max current Ramp	[%] [%] [s]	0...50 50...100 0...32.5
Interface		RS 232C, parametrizing connection 5polig
EMC		EN 61000-6-2, EN 61000-6-4
Central connection		6 + PE acc. EN 175201-804
Cable specification	[mm²]	7 x 1.0 overall braid shield
Cable length max.	[m]	50

[1] If valves with onboard electronics are used in safety-related parts of control systems, in case the safety function is requested, the valve electronics voltage supply is to be switched off by a suitable switching element with sufficient reliability.

Signal/pressure curve

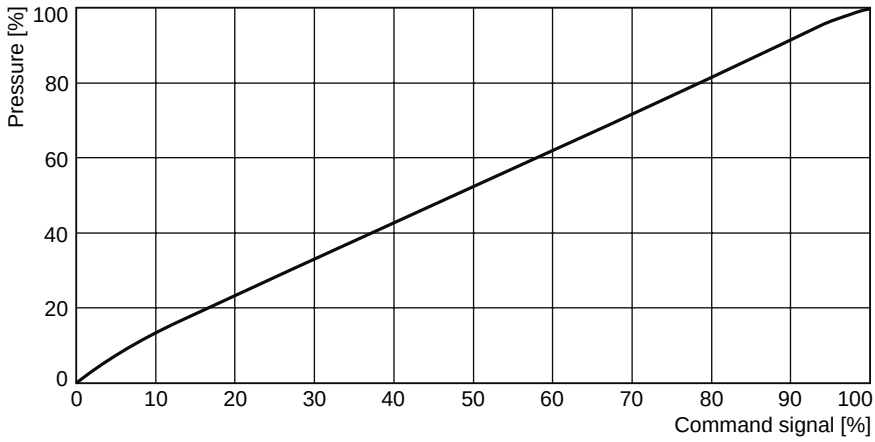

Min. adjusted pressure

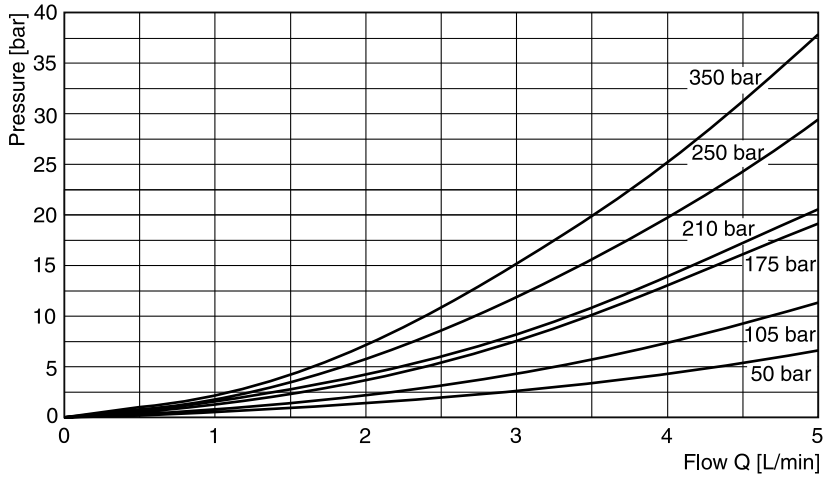

p/Q curve

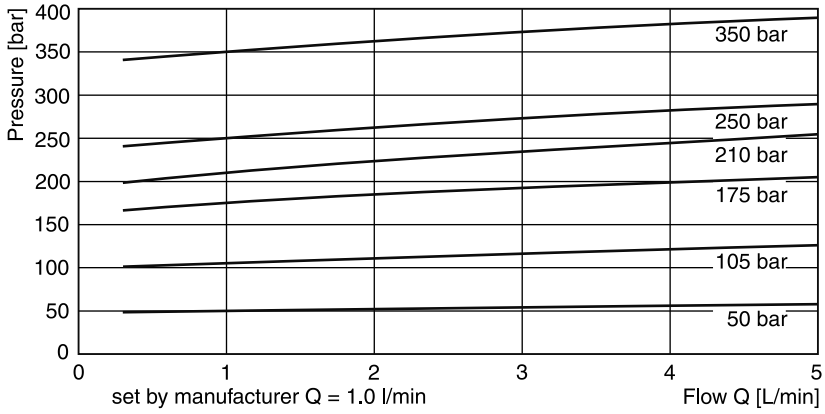

All characteristic curves measured with HLP46 at 50 °C.

RE06MT UK.indd RH 17.04.2015

4

Block diagram

Code F
6 + PE acc. EN 175201-804

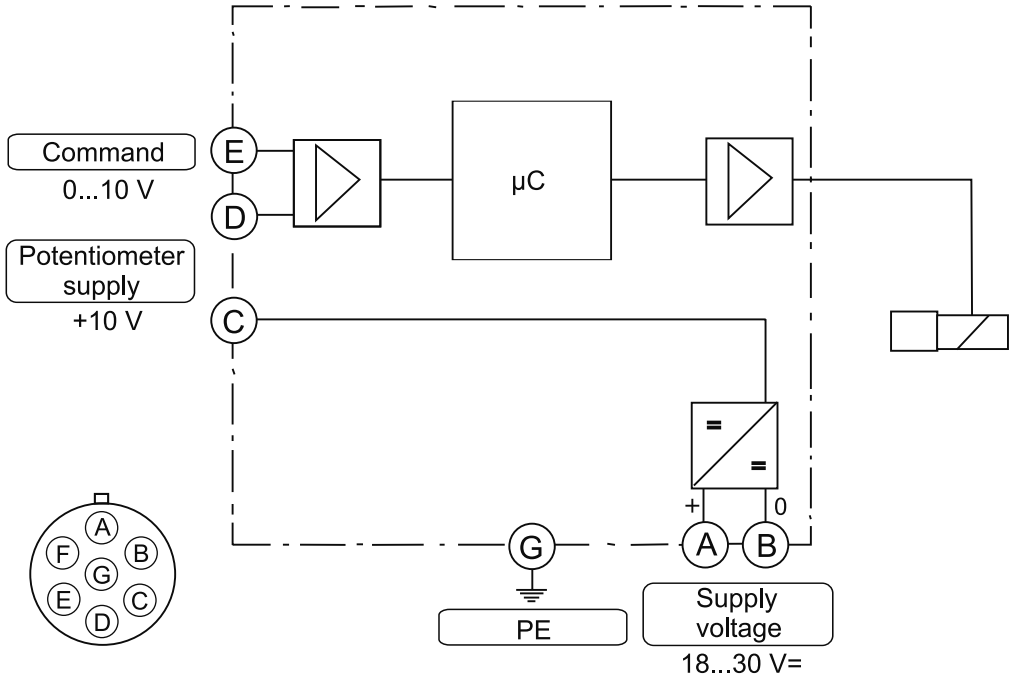

Code R
6 + PE acc. EN 175201-804

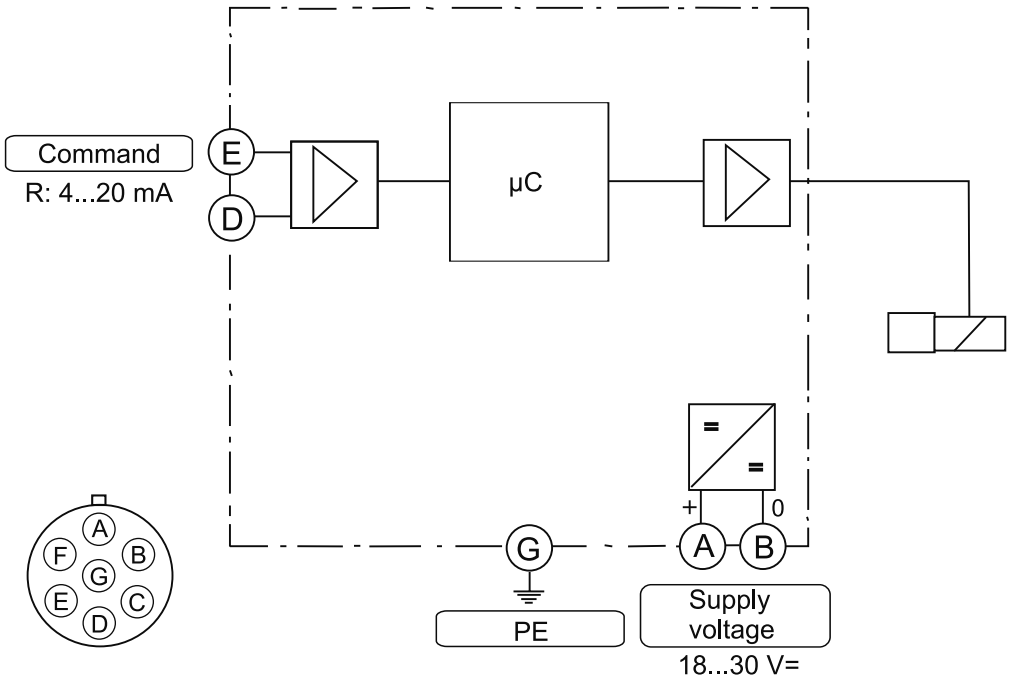

ProPxD interface program

The ProPxD software permits comfortable parameter setting for the module electronics. Via the clearly arranged entry mask the parameters can be noticed and modified. Storage of complete parameter sets is possible as well as printout or record as a text file for further documentation. Stored parameter sets may be loaded anytime and transmitted to other valves. Inside the electronics a non-volatile memory stores the data with the option for recalling or modification.

The PC software can be downloaded free of charge at www.parker.com/euro_hcd – see page “Support“ or directly at www.parker.com/propxd.

Features

- Comfortable editing of all parameters
- Depiction and documentation of parameter sets
- Storage and loading of optimized parameter adjustments
- Executable with all actual Windows® operating systems from Windows® XP upwards
- Plain communication between PC and electronics via serial interface RS232C

The parametrizing cable may be ordered under item no. 40982923.

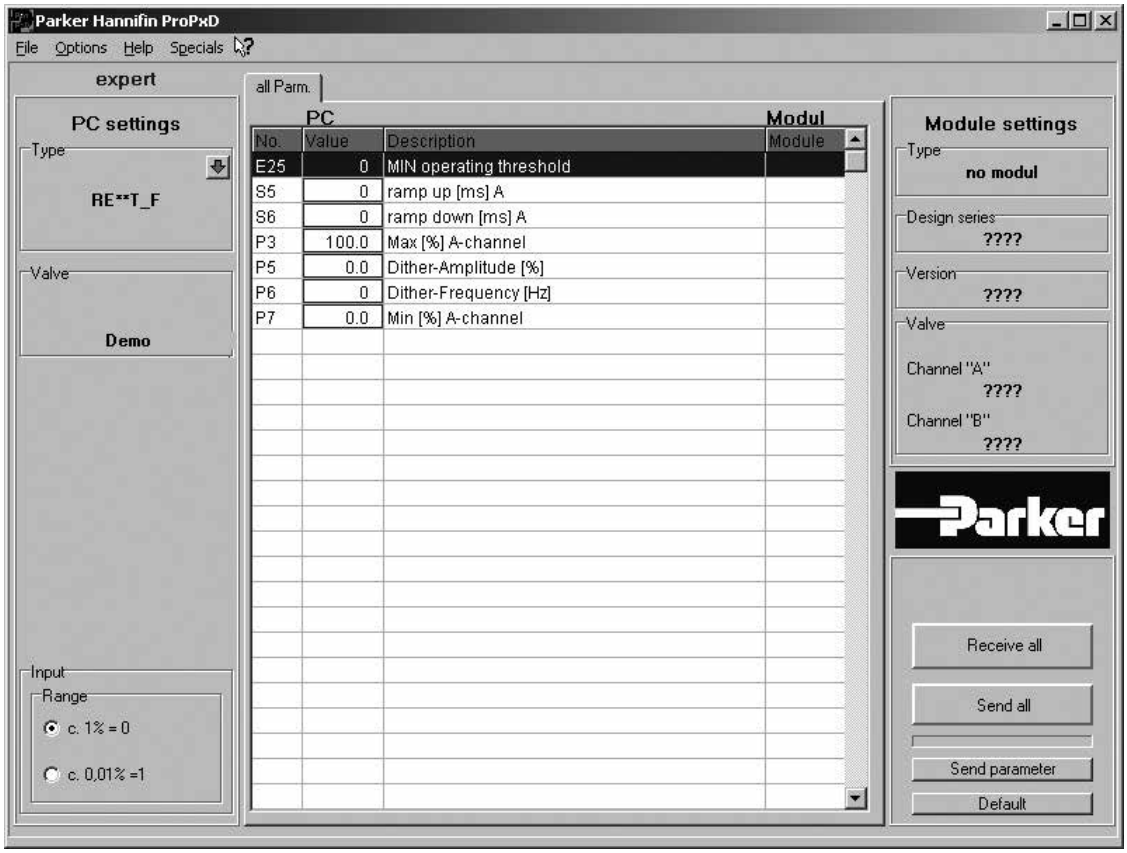

4

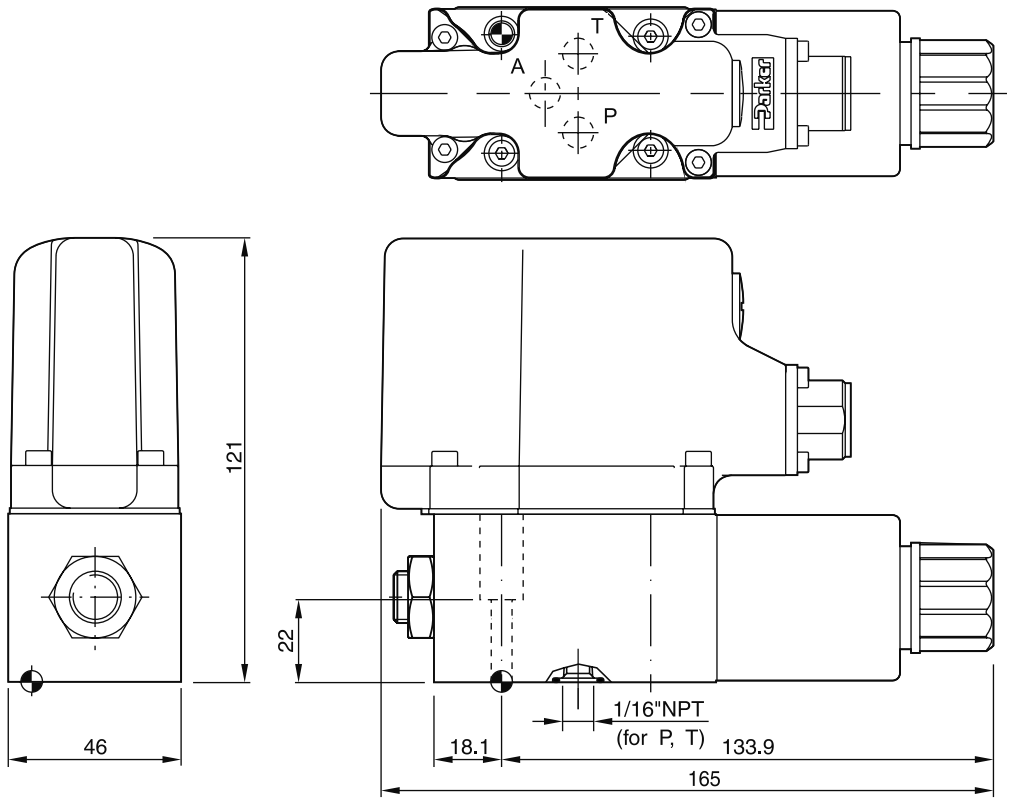

Surface finish	Bolt kit			Kit NBR	Kit FPM
R_{max}6.3 ▱ 0.01/100	BK 375	4x M5x30 ISO 4762-12.9	7.6 Nm ±15 %	SK-RE06MTN	SK-RE06MTV

Mounting pattern ISO 6264-03-04-*-97

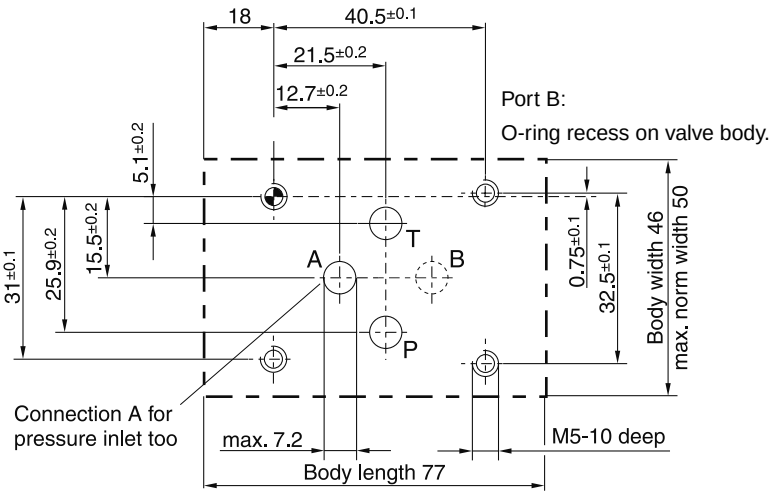

RE06MT UK.indd RH 17.04.2015

Pilot operated proportional pressure relief valves series R4V (DIN 24340 Form D) and R6V (DIN 24340 Form E) consist of a proportionally adjusted pilot stage and a seated type main stage.

The optimum performance can be achieved in combination with the digital amplifier module PCD00A-400.

Features

- Pilot operated with proportional solenoid
- 2 interfaces:
  - R4V subplate ISO 6264 (DIN 24340 Form D)
  - R6V subplate ISO 6264 (DIN 24340 Form E)
- 3 pressure stages
- Mechanical maximum pressure adjustment (optional for R6V)

R6V06

R4V06

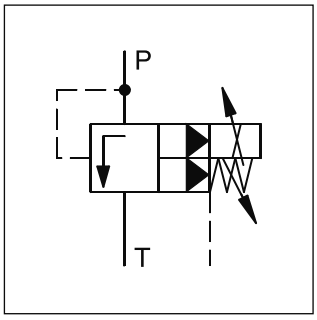

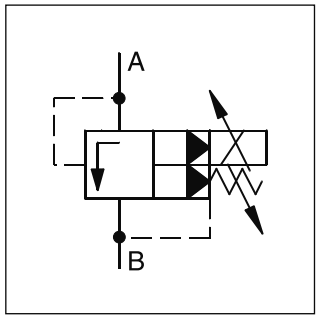

4

R6V06

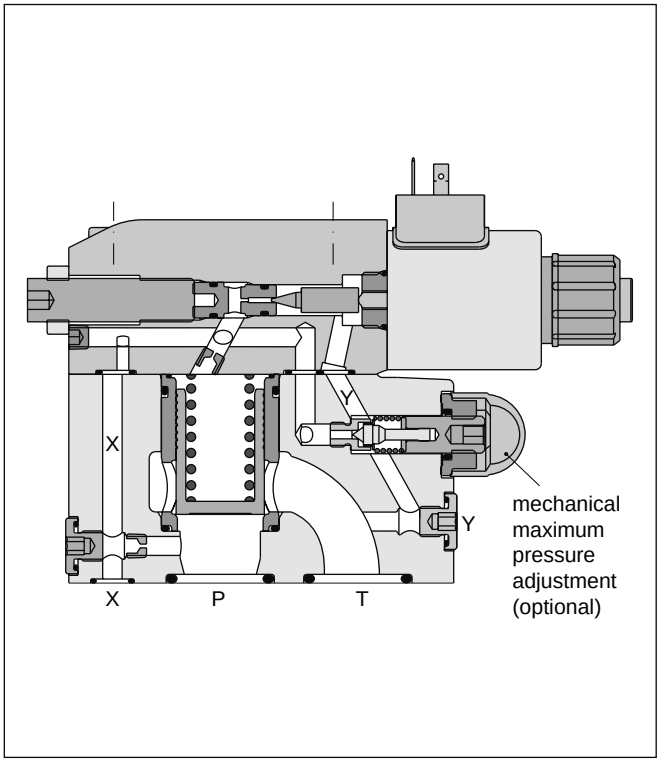

R4V06

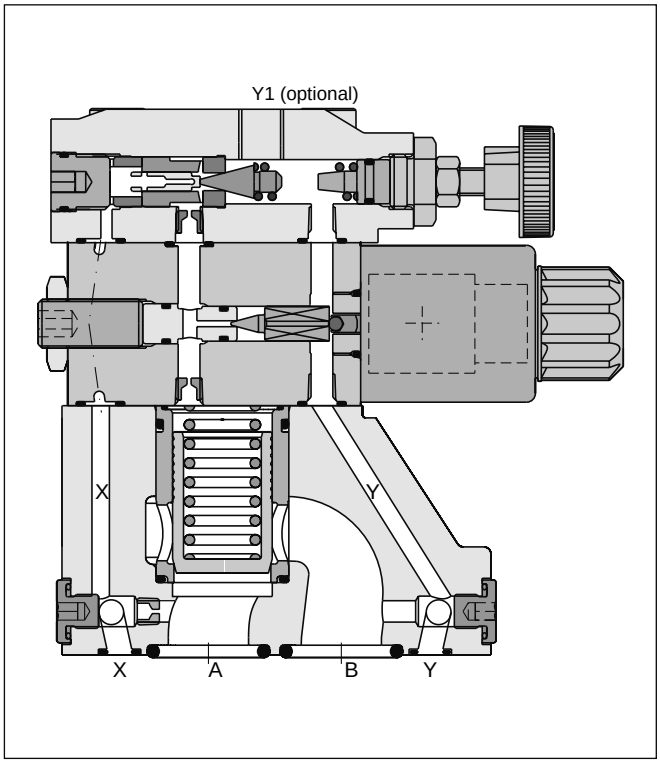

R		V		– 5						G0R				
Pressure valve	**Interface**	**Relief function**	**Nominal size**	**Max. pressure (350 bar)**	**Drain port**	**Pressure stages**	**Mechanical adjustment**	**Pilot oil**	**Options**	**Solenoid voltage 12 V / 2.3 A**	**Design**	**Seals**	**Design series** (not required for ordering)	**Modifi-cations**

4

Code	Interface	
4	Subplate mounting ISO 6264	NG10 and 25 / NG32 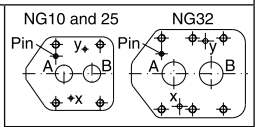
6		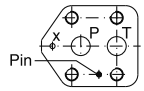

Code	Seals
1	NBR
5	FPM

Code	Design
A	R4V
B	R6V

Code	Options
P2	With mechanical max. adjustment
PS [5]	w/o mechanical max. adjustment

Code	Nominal size
03	NG10
06	NG25
10	NG32

Code	Interface	Drain port
3	R4V	Y port in mounting pattern
9	R6V	Y-port = G 1/8“

Pilot oil	
Code	Drain line
0	internal
1 [3]	external from sub-plate
2 [4]	external from valve body (Y-port)

Code	Pressure stages [1]
1	up to 105 bar
3	up to 210 bar
5	up to 350 bar

Code	Interface	Mechanical adjustment
P [2]	R6V	Hexagon screw with lock nut
1	R4V	Hand knob
3	R4V	Acorn nut with lead seal

[1] Other pressure stages on request.
[2] Use code P also for valve w/o mechanical adjustment.
[3] R4V only.
[4] R6V only.
[5] Not for R4V.

R4V-R6V PROP UK.indd RH 25.03.2015

General				
Nominal size		**10**	**25**	**32**
Interface		Subplate mounting acc. ISO 6264		
Mounting position		Unrestricted, horizontal mounting preferred		
Ambient temperature	[°C]	-20...+60		
$MTTF_D$ value	[years]	75		
Weight Series R6V	[kg]	5.2	6.4	8.3
Series R4V	[kg]	4.5	6.3	7.8
Hydraulic				
Max. operating pressure	[bar]	Ports P (or A) and X up to 350, port T (or B) and Y 30		
Pressure stages	[bar]	105, 210, 350		
Nominal flow	[l/min]	250	500	650
Fluid		Hydraulic oil according to DIN 51524		
Viscosity, permitted	[cSt] / [mm²/s]	20 ... 400		
recommended	[cSt] / [mm²/s]	30 ... 80		
Fluid temperature	[°C]	-20...+70 (NBR: -25...+70)		
Filtration		ISO 4406 (1999); 18/16/13		
Electrical (prop. solenoid)				
Duty ratio	[%]	100 ED; CAUTION: coil temperature up to 150 °C possible		
Protection class		IP65 in accordance with EN 60529 (with correctly mounted plug-in connector)		
Supply voltage	[V]	12 V =		
Max. current	[A]	2.1		
Coil resistance at 20 °C	[Ohm]	4.28		
Solenoid connection		Connector as per EN 175301-803		
Power amplifier, recommended		PCD00A-400		

4

R4V Signal/pressure curve

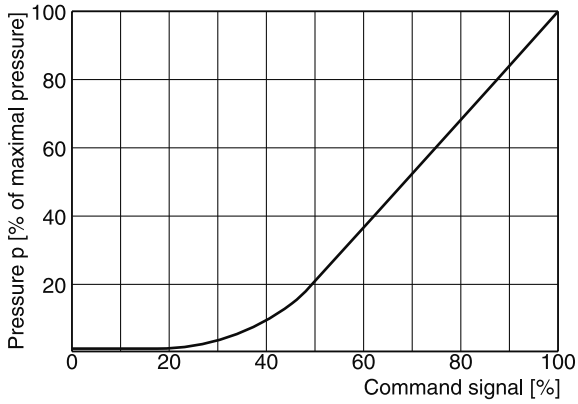

R6V Signal/pressure curve

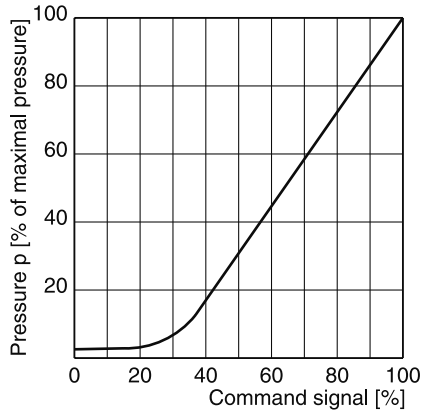

p/Q performance curves [1)]

R4V / R6V03

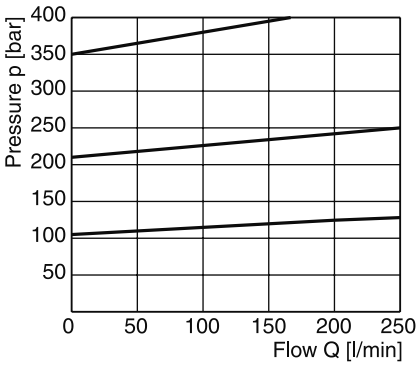

R4V / R6V06

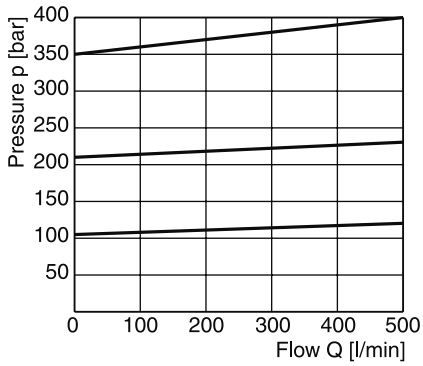

R4V / R6V10

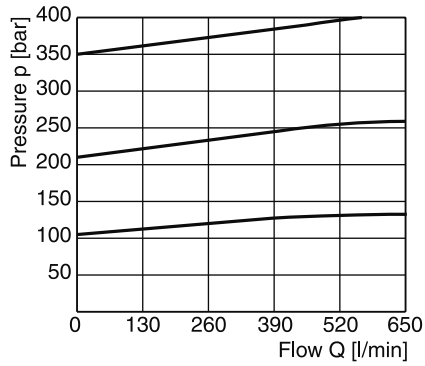

Minimum pressure curves [1)]

R4V / R6V03

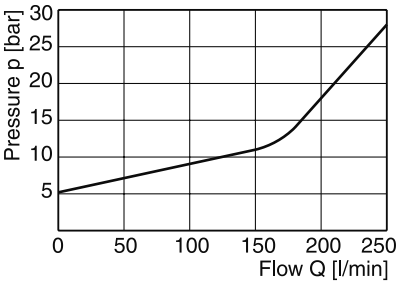

R4V / R6V06

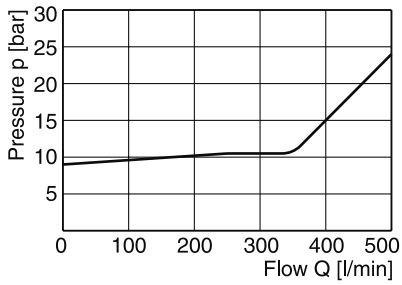

R4V / R6V10

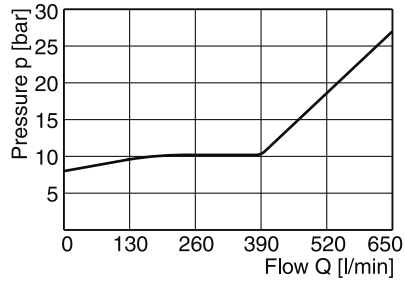

All characteristic curves measured with HLP46 at 50 °C.

[1)] The performance curves are measured with external drain.
For internal drain the tank pressure has to be added to curve.

R4V

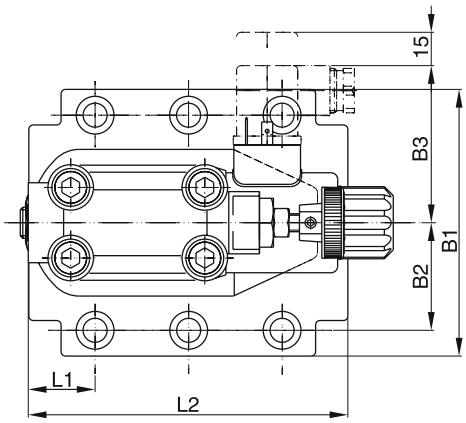

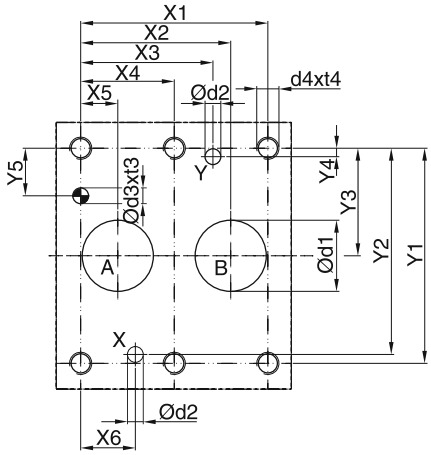

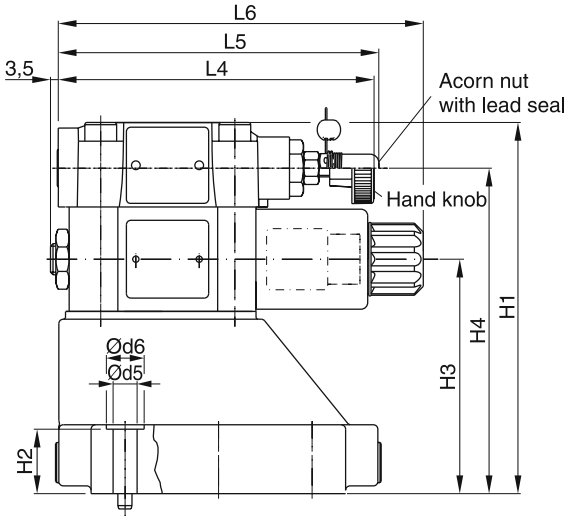

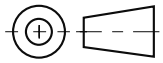

NG	ISO-code	x1	x2	x3	x4	x5	x6	x7	y1	y2	y3	y4	y5	y6
10	6264-06-07-*-97	42.9	35.8	21.5	–	7.2	21.5	0	66.7	58.8	33.4	7.9	14.3	–
25	6264-08-11-*-97	60.3	49.2	39.7	–	11.1	20.6	0	79.4	73	39.7	6.4	15.9	–
32	6264-10-15-*-97	84.2	67.5	59.5	42.1	16.7	24.6	0	96.8	92.8	48.4	3.8	21.4	–

Tolerance at X and Y pin holes and screw holes ±0.1, at port holes ±0.2.

NG	ISO-code	B1	B2	B3	H1	H2	H3	H4	H6	L1	L2	L3	L4	L5	L6
10	6264-06-07-*-97	87.3	33.35	71	130	21	68.5	109.5	–	25	90.8	–	143	144.8	164.8
25	6264-08-11-*-97	105	39.7	71	154.5	29	93	134	–	30.9	123	–	143	144.8	164.8
32	6264-10-15-*-97	120	48.4	71	167	30	105.5	146.5	–	29.8	143.5	–	143	144.8	164.8

NG	ISO-code	d1max	d2max	d3	t3	d4	t4	d5	d6	Subplate [1]
10	6264-06-07-*-97	15	7	7.1	8	M10	16	10.8	17	SPP 3M6B 910
25	6264-08-11-*-97	23.4	7.1	7.1	8	M10	18	10.8	17	SPP 6M8B 910
32	6264-10-15-*-97	32	7.1	7.1	8	M10	20	10.8	17	SPP 10M12B 910

NG	Bolt kit			Kit NBR	Kit FPM	Surface finish
10	BK505	4x M10x35 ISO 4762-12.9	63 Nm ±15 %	S26-58507-0 [2]	S26-58507-5 [2]	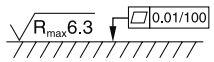
25	BK485	4x M10x45 ISO 4762-12.9	63 Nm ±15 %	S26-58475-0 [2]	S26-58475-5 [2]	
32	BK506	4x M10x45 ISO 4762-12.9	63 Nm ±15 %	S26-58508-0 [2]	S26-58508-5 [2]	
Prop. section P2				S26-58473-0	S26-58473-5	

[1] Details see chapter 12, series SPP.
[2] Please combine seal kit of one size with seal kit of prop. section P2 for complete seal kit.

R4V-R6V PROP UK.indd RH 25.03.2015

R6V

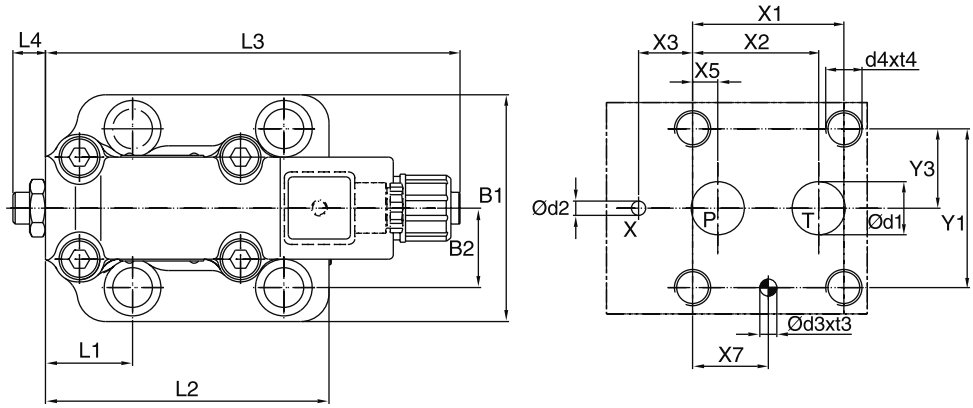

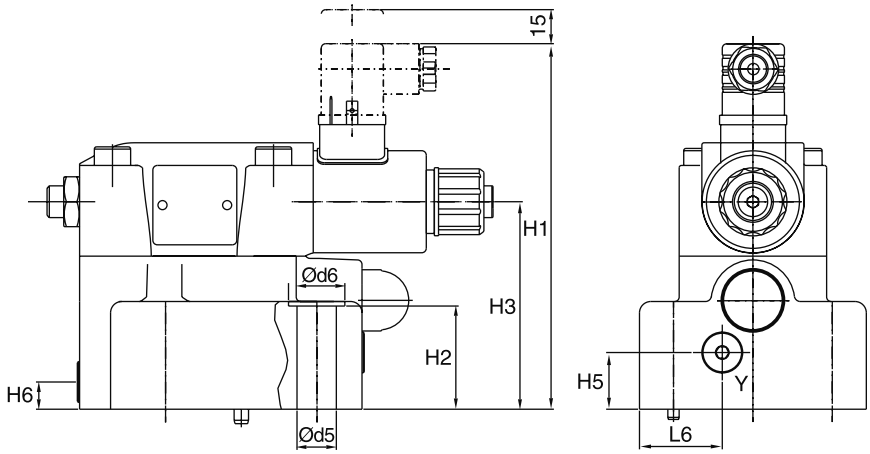

Y: external drain port G 1/8“

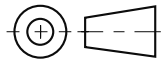

NG	ISO-code	x1	x2	x3	x4	x5	x6	x7	y1	y2	y3	y4	y5	y6
10	6264-06-09-*-97	53.8	47.5	0	–	22.1	–	22.1	53.8	–	26.9	–	–	–
25	6264-08-13-*-97	66.7	55.6	23.8	–	11.1	–	33.4	70	–	35	–	–	–
32	6264-10-17-*-97	88.9	76.2	31.8	–	12.7	–	44.5	82.6	–	41.3	–	–	–

Tolerance at X and Y pin holes and screw holes ±0.1, at port holes ±0.2.

NG	ISO-code	B1	B2	H1	H2	H3	H4	H5	H6	L1	L2	L3	L4	L5	L6
10	6264-06-09-*-97	80	26.9	158.7	27	88	–	20.5	25	52	117	182.3	14.4	–	29.5
25	6264-08-13-*-97	100	35	161.2	46.5	91.5	–	25	12	37.9	124.5	182.3	14.4	–	36.5
32	6264-10-17-*-97	120	41.3	166.7	51.3	98.5	–	26.5	13.5	44.3	153	182.3	14.4	–	46.5

NG	ISO-code	d1max	d2max	d3	t3	d4	t4	d5	d6	Subplate [1]
10	6264-06-09-*-97	14.7	4.8	7.5	10	M12	20	13.5	20	SPP 3R6B 910
25	6264-08-13-*-97	23.4	6.3	7.5	10	M16	27	17.5	25	SPP 6R10B 910
32	6264-10-17-*-97	32	6.3	7.5	10	M18	28	20	30	SPP 10R12B 910

NG	Bolt kit			Kit		Surface finish
				NBR	FPM	
10	BK494	4x M12x45 ISO 4762-12.9	108 Nm ±15 %	S26-98589-0	S26-98589-5	R_{max}6.3 ▱ 0.01/100
25	BK366	4x M16x70 ISO 4762-12.9	264 Nm ±15 %	S26-96396-0	S26-96396-5	
32	BK507	4x M18x75 ISO 4762-12.9	398 Nm ±15 %	S26-96392-0	S26-96392-5	

[1] Details see chapter 12, series SPP.

R4V-R6V PROP UK.indd RH 25.03.2015

The proportional solenoid operated pilot stage with integrated electronics controls a seated type main stage. The valves are optionally available with a mechanical maximum pressure adjustment.
The onboard electronics of the proportional pressure relief valves is based on the functionality of the digital amplifier PCD00.
The digital onboard electronics is situated in a robust metal housing and can be used in rough environments.
The nominal values of the valves are factory set. Additionally the ProPxD software permits the editing of all parameters. The software is also used for the digital electronic modules. The cable for connection to a serial RS232C interface is available as accessory.
The electrical connection is available in 2 options:

Code 10V: 6 + PE central connection
0...+10 V command signal
+10 V reference voltage output

Code 4MA: 6 + PE central connection
4…20 mA command signal

R6V06

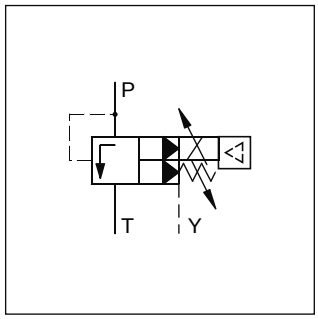

R6V

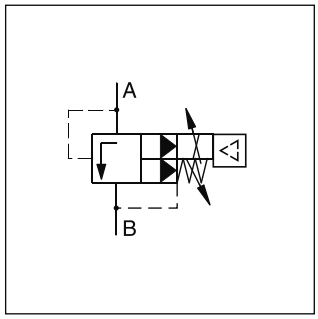

R4V

Features

- Pilot operated with proportional solenoid
- Onboard electronics factory set
- Ramp time adjustment
- Linearized characteristics
- 3 pressure stages
- 2 interfaces:
  - R4V subplate ISO 6264 (DIN 24340 Form D)
  - R6V subplate ISO 6264 (DIN 24340 Form E)
- Optional mechanical maximum pressure adjustment

R4V06

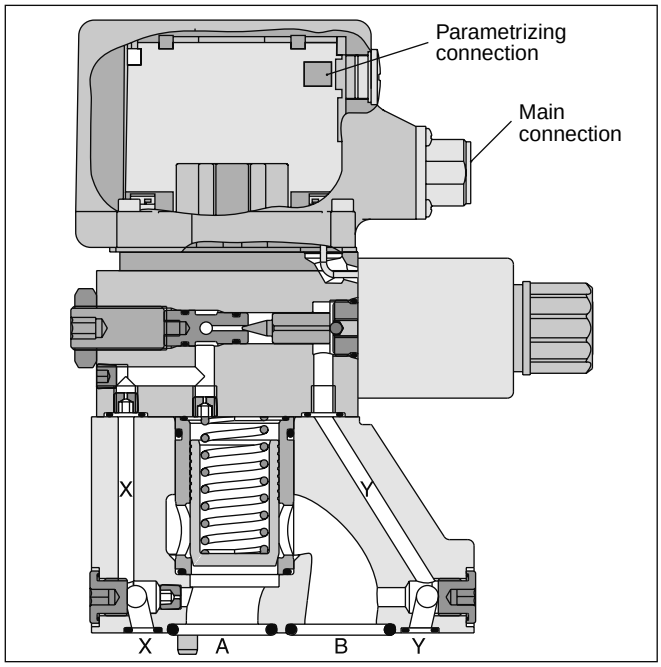

R6V06

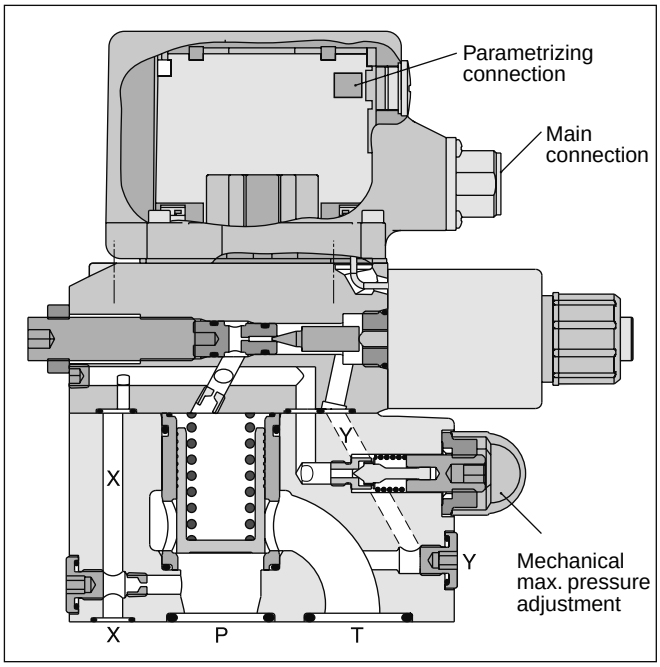

R		V		5			P							
Pressure valve	**Interface**	**Relief function**	**Nominal size**	**Max. pressure (350 bar)**	**Drain port**	**Pressure setting range**	**Proportional operation**	**Pilot oil**	**Options**	**Command signal**	**Design**	**Seals**	**Design series** (not required for ordering)	**Modifi-cations**

Code	Interface	
4	Subplate mounting ISO 6264	NG10 and 25 / NG32
6		

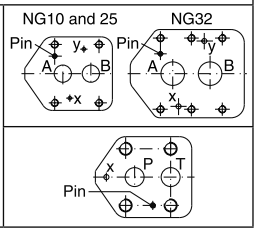

Code	Nominal size
03	NG10
06	NG25
10	NG32

Code	Interface	Drain port
3	R4V	Y from subplate
9	R6V	Y-port = G 1/8“

Code	Pressure stages [1]
1	up to 105 bar
3	up to 210 bar
5	up to 350 bar

Code	Seals
1	NBR
5	FPM

Code	Design
A	R4V
B	R6V

Code	Command signal
10V	0...10 V (ref. output +10 V)
4MA	4...20 mA

Code	Options
PN	w/o mech. max. adjustment
PM [4]	With mech. max. adjustment

Pilot oil	
Code	Drain line
0	internal
1 [2]	external from subplate
2 [3]	external from valve body (Y-port)

Please order plugs separately, see chapter 4, accessories.
Parametrizing cable OBE → RS232, item no. 40982923.

[1] Other pressure stages on request.
[2] R4V only.
[3] R6V only.
[4] R4V: adjustment with acorn nut.

General				
Nominal size		**NG10**	**NG25**	**NG32**
Interface		Subplate mounting acc. ISO 6264		
Mounting position		Unrestricted, horizontal mounting preferred		
Ambient temperature	[°C]	-20...+60		
$MTTF_D$ value [1]	[years]	75		
Weight Series R6V	[kg]	5.4	6.6	8.6
Series R4V	[kg]	4.5	6.3	7.8
Vibration strength	[g]	10 sinus 5...2000 Hz acc. to IEC 68-2-6 30 noise 20...2000 Hz acc. to IEC 68-2-36 15 shock acc. to IEC 68-2-27		
Hydraulic				
Max. operating pressure	[bar]	Ports P (or A) and X up to 350, port T (or B) and Y 30		
Pressure stages	[bar]	105, 210, 350		
Nominal flow	[l/min]	250	500	650
Fluid		Hydraulic oil according to DIN 51524		
Viscosity, permitted	[cSt] / [mm²/s]	20 ... 400		
recommended	[cSt] / [mm²/s]	30 ... 80		
Fluid temperature	[°C]	-20...+70 (NBR: -25...+70)		
Filtration		ISO 4406 (1999); 18/16/13		
Hysteresis	[%]	< 1.5		
Electrical				
Duty ratio ED	[%]	100		
Supply voltage	VDC	18...30, ripple < 5 % eff., surge free		
Current consumption max.	[A]	2.0		
Pre-fusing	[A]	2.5 medium lag		
Potentiometer supply	[V]	+10 / ±5 % max. 10 mA		
Command signal Code 10V voltage Code 4MA current	 [V] [mA]	 0...+10, ripple < 0.01 % eff., surge free, Ri = 100 kOhm 4...20, ripple < 0.01 % eff., surge free, Ri = 200 Ohm < 3.6 mA = enable off, > 3.8 mA = enable on (acc. NAMUR NE43)		
Differential input voltage max.	[V]	30 for terminal D and E against PE (terminal G)		
	[V]	11 for terminal D and E against 0V (terminal B)		
Adjustment ranges Min current	[%]	0...50		
Max current	[%]	50...100		
Ramp	[s]	0...32.5		
Interface		RS232C, parametrizing connection 5pole		
EMC		EN 61000-6-2, EN 61000-6-4		
Central connection		6 + PE acc. EN 175201-804		
Cable specification	[mm²]	7 x 1.0 overall braid shield		
Cable length max.	[m]	50		

[1] If valves with onboard electronics are used in safety-related parts of control systems, in case the safety function is requested, the valve electronics voltage supply is to be switched off by a suitable switching element with sufficient reliability.

4

R4V/R6V

Command/pressure curve

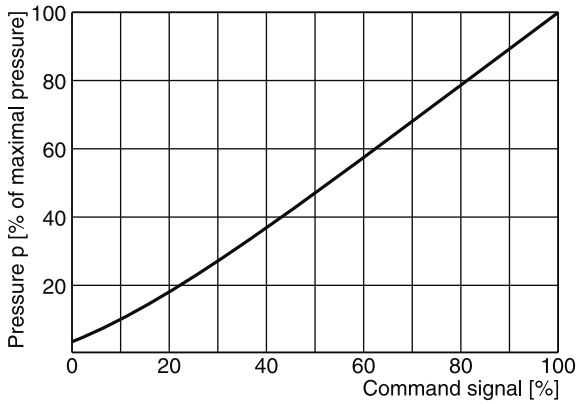

p/Q performance curves [1)]

R4V / R6V03

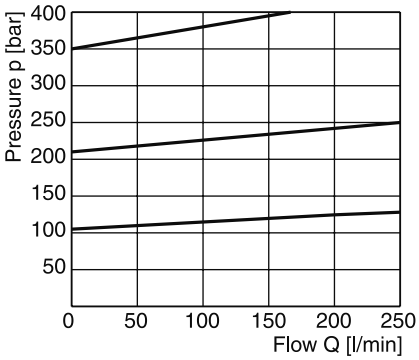

R4V / R6V06

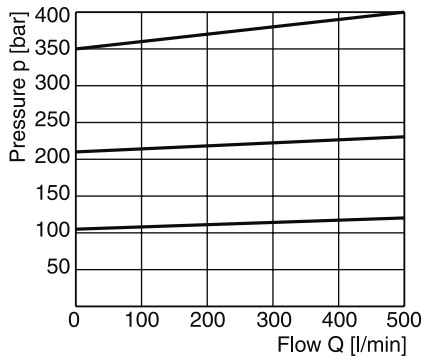

R4V / R6V10

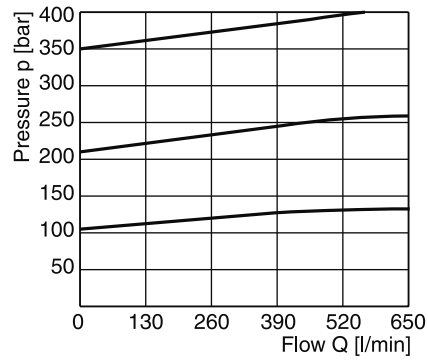

Minimum pressure curves [1)]

R4V / R6V03

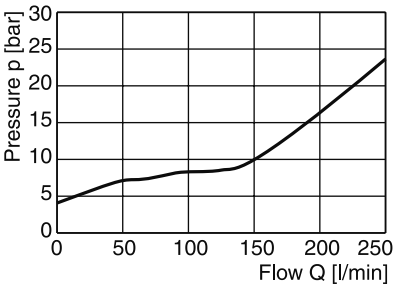

R4V / R6V06

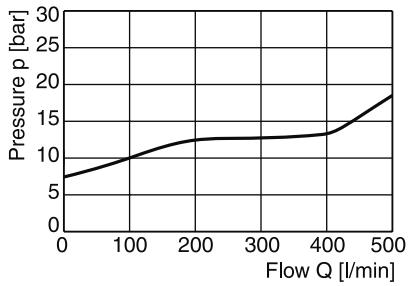

R4V / R6V10

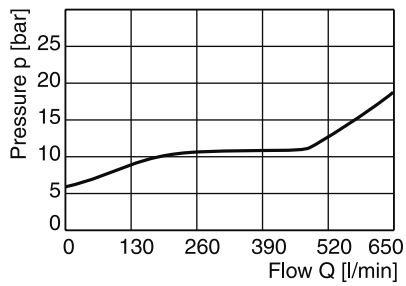

All characteristic curves measured with HLP46 at 50 °C.

[1)] The performance curves are measured with external drain.
For internal drain the tank pressure has to be added to curve.

Block diagram

Code 10V
6 + PE acc. EN 175201-804

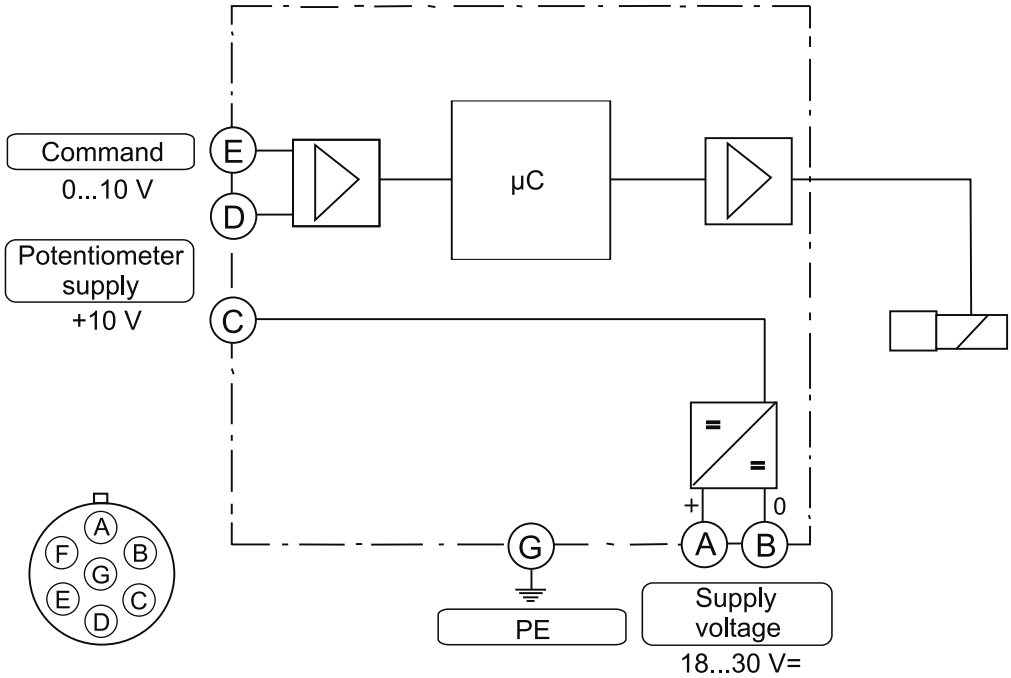

Code 4MA
6 + PE acc. EN 175201-804

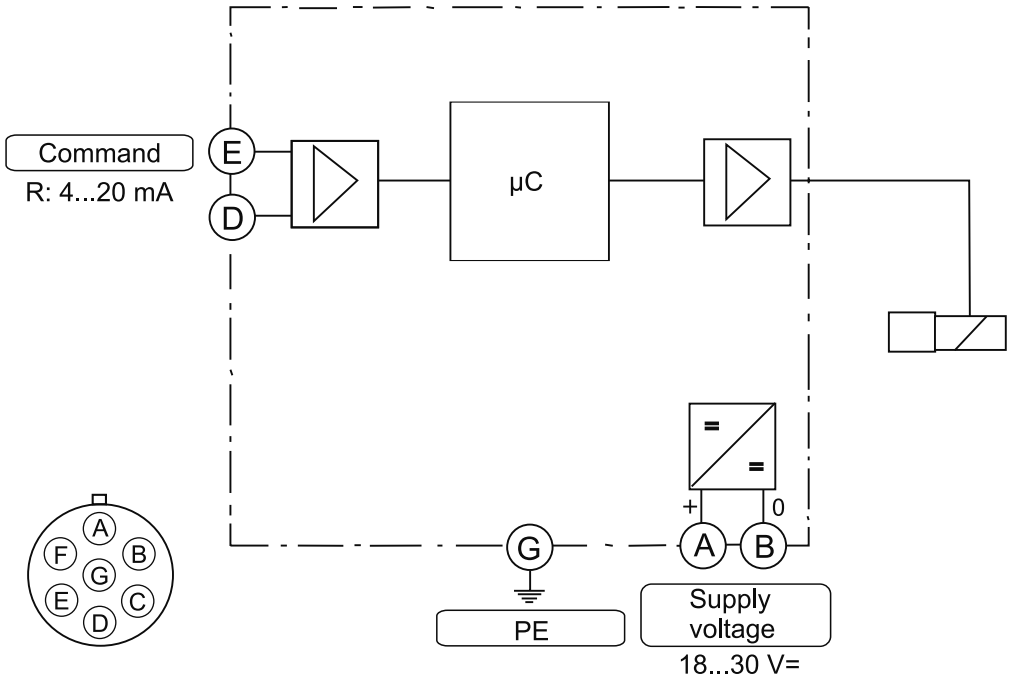

ProPxD interface program

The ProPxD software permits comfortable parameter setting for the module electronics. Via the clearly arranged entry mask the parameters can be noticed and modified. Storage of complete parameter sets is possible as well as printout or record as a text file for further documentation. Stored parameter sets may be loaded anytime and transmitted to other valves. Inside the electronics a non-volatile memory stores the data with the option for recalling or modification.

The PC software can be downloaded free of charge at www.parker.com/euro_hcd – see page “Support“ or directly at www.parker.com/propxd.

Features

- Comfortable editing of all parameters
- Depiction and documentation of parameter sets
- Storage and loading of optimized parameter adjustments
- Executable with all actual Windows® operating systems from Windows® XP upwards
- Plain communication between PC and electronics via serial interface RS232C

The parametrizing cable may be ordered under item no. 40982923.

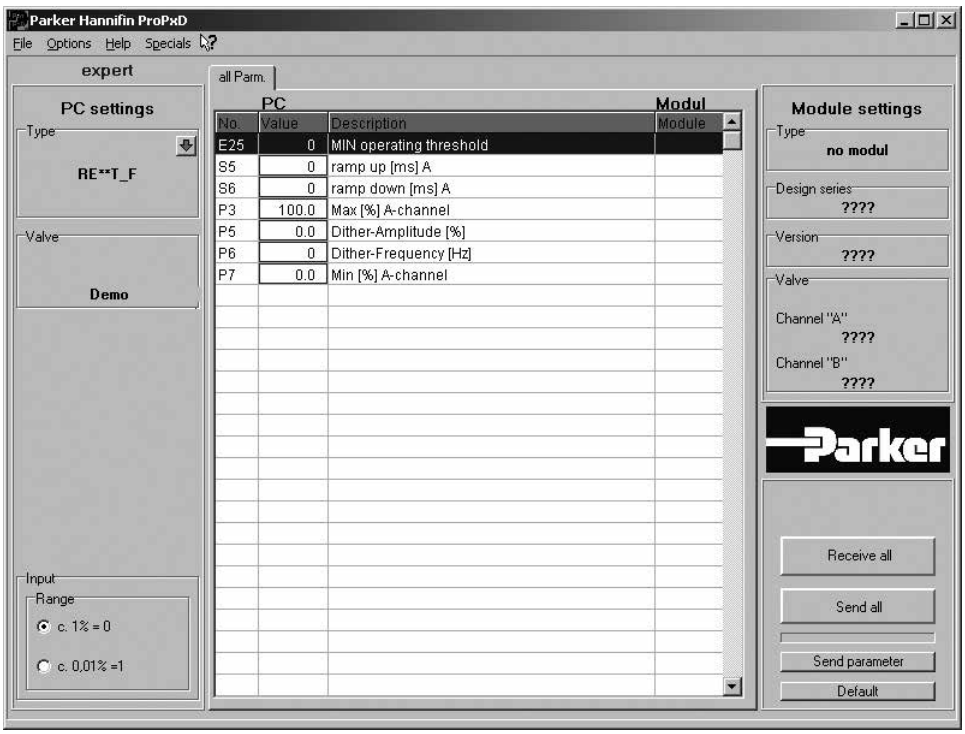

R4V

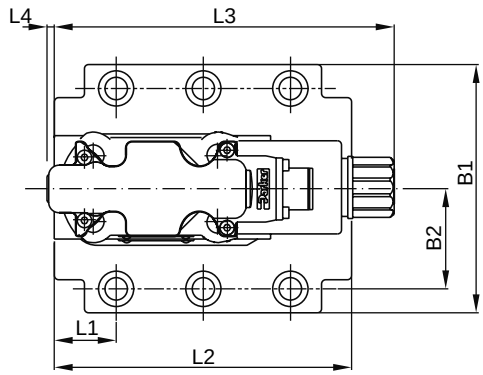

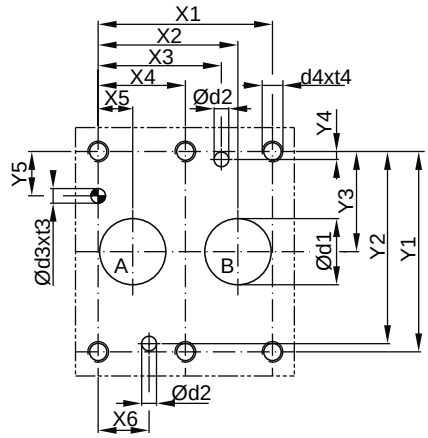

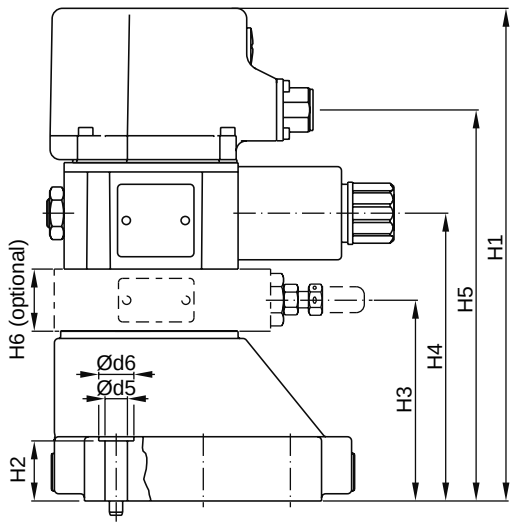

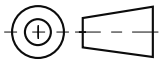

NG	ISO-code	x1	x2	x3	x4	x5	x6	x7	y1	y2	y3	y4	y5	y6
10	6264-06-07-*-97	42.9	35.8	21.5	–	7.2	21.5	0	66.7	58.8	33.4	7.9	14.3	–
25	6264-08-11-*-97	60.3	49.2	39.7	–	11.1	20.6	0	79.4	73	39.7	6.4	15.9	–
32	6264-10-15-*-97	84.2	67.5	59.5	42.1	16.7	24.6	0	96.8	92.8	48.4	3.8	21.4	–

Tolerance at X and Y pin holes and screw holes ±0.1, at port holes ±0.2.

NG	ISO-code	B1	B2	H1	H2	H3	H4	H5	H6	L1	L2	L3	L4	L5	L6
10	6264-06-07-*-97	87.3	33.35	204.7	21	62	103	148.2	32	25	90.8	164.2	4.5	–	–
25	6264-08-11-*-97	105	39.7	229.2	29	86.5	127.5	172.7	32	30.9	123	164.2	4.5	–	–
32	6264-10-15-*-97	120	48.4	241.7	30	99	140	185.2	32	29.8	143.5	164.2	4.5	–	–

NG	ISO-code	d1max	d2max	d3	t3	d4	t4	d5	d6	Subplate [1]
10	6264-06-07-*-97	15	7	7.1	8	M10	16	10.8	17	SPP 3M6B 910
25	6264-08-11-*-97	23.4	7.1	7.1	8	M10	18	10.8	17	SPP 6M8B 910
32	6264-10-15-*-97	32	7.1	7.1	8	M10	20	10.8	17	SPP 10M12B 910

NG	Bolt kit			Kit NBR	Kit FPM	Surface finish
10	BK505	4x M10x35 ISO 4762-12.9	63 Nm ±15 %	S26-58507-0 [2]	S26-58507-5 [2]	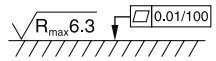
25	BK485	4x M10x45 ISO 4762-12.9	63 Nm ±15 %	S26-58475-0 [2]	S26-58475-5 [2]	
32	BK506	6x M10x45 ISO 4762-12.9	63 Nm ±15 %	S26-58508-0 [2]	S26-58508-5 [2]	
Prop. section P2				S26-58473-0	S26-58473-5	

[1] Details see chapter 12, series SPP.
[2] Please combine seal kit of one size with seal kit of Prop. section P2 for complete seal kit.

4

R6V

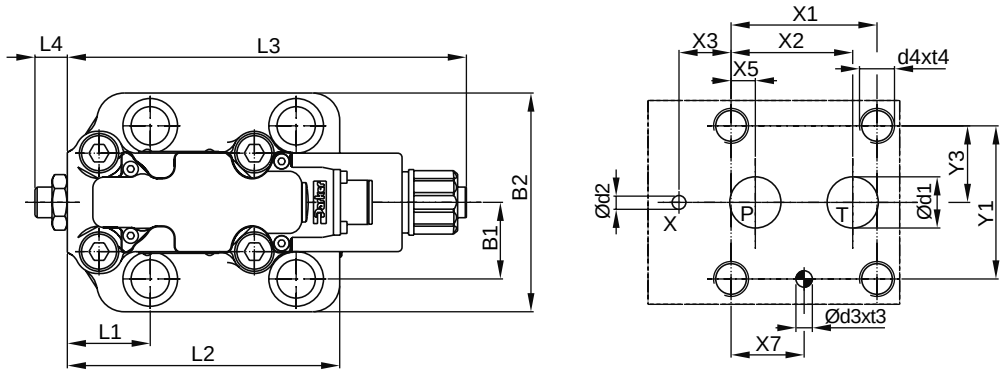

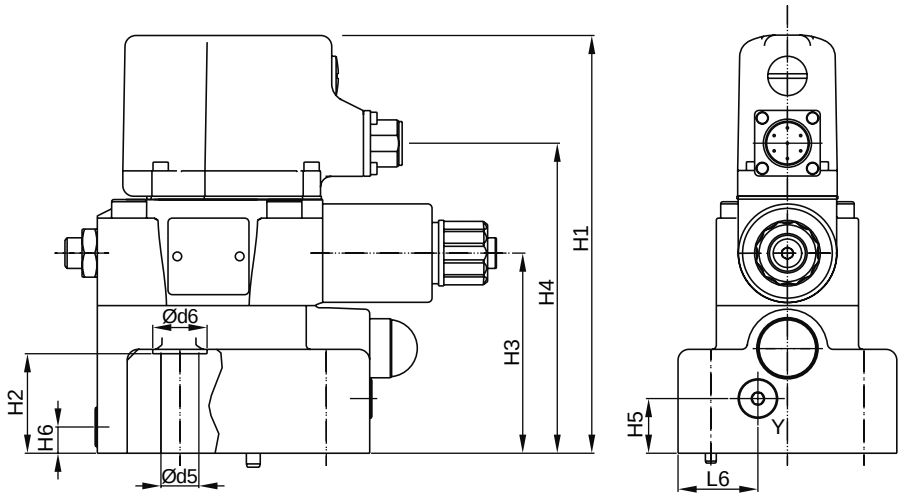

Y: external drain port G 1/8“

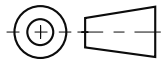

NG	ISO-code	x1	x2	x3	x4	x5	x6	x7	y1	y2	y3	y4	y5	y6
10	6264-06-09-*-97	53.8	47.5	0	–	22.1	–	22.1	53.8	–	26.9	–	–	–
25	6264-08-13-*-97	66.7	55.6	23.8	–	11.1	–	33.4	70	–	35	–	–	–
32	6264-10-17-*-97	88.9	76.2	31.8	–	12.7	–	44.5	82.6	–	41.3	–	–	–

Tolerance at X and Y pin holes and screw holes ±0.1, at port holes ±0.2.

NG	ISO-code	B1	B2	H1	H2	H3	H4	H5	H6	L1	L2	L3	L4	L5	L6
10	6264-06-09-*-97	80	26.9	187.2	27	88	138.2	20.5	25	52	117	182.3	14.4	–	29.5
25	6264-08-13-*-97	100	35	190.7	46.5	91.5	141.7	25	12	37.9	124.5	182.3	14.4	–	36.5
32	6264-10-17-*-97	120	41.3	197.7	51.3	98.5	148.7	26.5	13.5	44.3	153	182.3	14.4	–	46.5

NG	ISO-code	d1max	d2max	d3	t3	d4	t4	d5	d6	Subplate [1]
10	6264-06-09-*-97	14.7	4.8	7.5	10	M12	20	13.5	20	SPP 3R6B 910
25	6264-08-13-*-97	23.4	6.3	7.5	10	M16	27	17.5	25	SPP 6R10B 910
32	6264-10-17-*-97	32	6.3	7.5	10	M18	28	20	30	SPP 10R12B 910

NG	Bolt kit			Kit		Surface finish
				NBR	FPM	
10	BK494	4x M12x45 ISO 4762-12.9	108 Nm ±15 %	S26-98589-0	S26-98589-5	R_{max}6.3 ⏥ 0.01/100
25	BK366	4x M16x70 ISO 4762-12.9	264 Nm ±15 %	S26-96396-0	S26-96396-5	
32	BK507	4x M18x75 ISO 4762-12.9	398 Nm ±15 %	S26-96392-0	S26-96392-5	

[1] Details see chapter 12, series SPP.

R4V-R6V OBE UK.indd RH 17.04.2015

Pilot operated relief valve with proportional adjustment. Series VBY*K is a pilot operated pressure valve with external drain. Because of the high pressure capability of the outlet port the VBY can be used as sequence valve. In this case the external drain port Y has to be used.

The optimum performance can be achieved in combination with the digital amplifier module PCD00A-400.

VBY*K06

VBY*K10

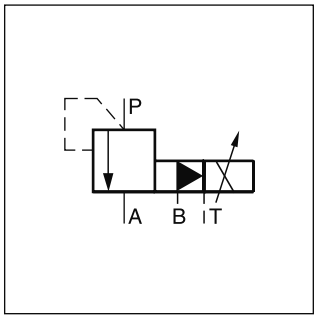

VBY*K06

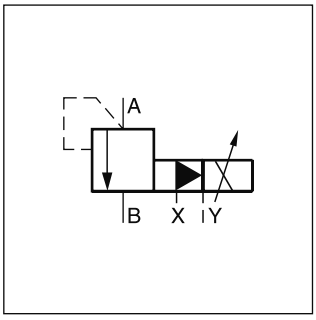

VBY*K10

Features

- Proportional adjustment
- Subplate mounting acc. to ISO 5781
- External drain
- Main stage spool type valve
- Pilot stage seated type valve

VBY*K06

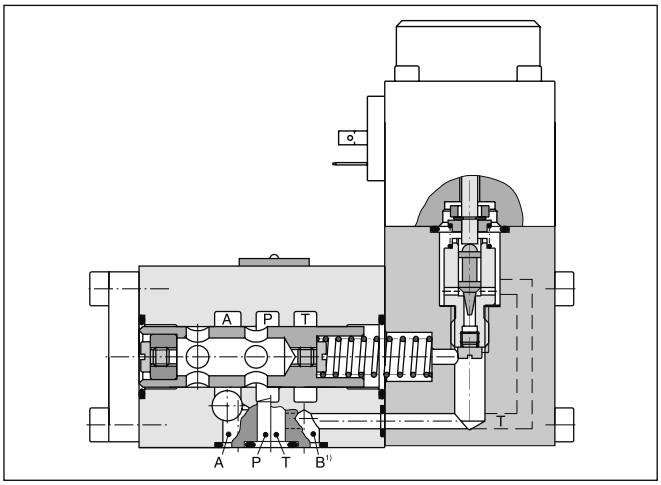

VBY*K10

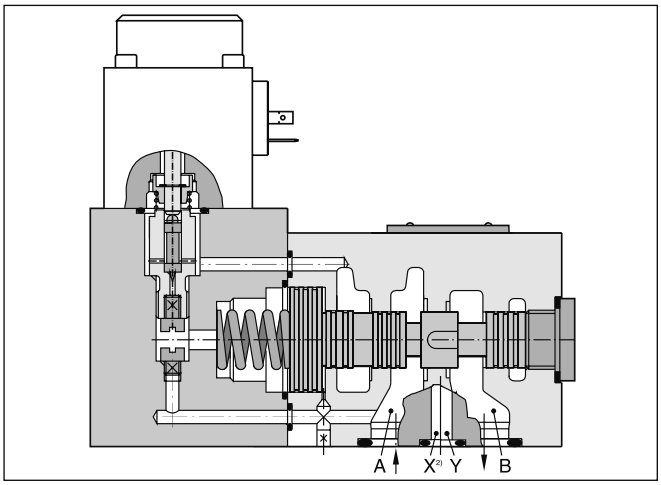

Ordering code

VBY		K			
Pressure relief valve	**Max. setting range**	**Proportional solenoid 9 VDC / 2.5 A**	**Nominal size**	**Seals**	**Design series** (not required for ordering)

Code	Max. setting range
064	**64 bar**
100	100 bar
160	**160 bar**
210	210 bar
315	315 bar

Code	Seals
N	**NBR**
V	FPM

Code	Nominal size
06	**NG06**
10	**NG10**

Bold letters =
Short-term availability

1) Port B for remote control, otherwise to be blocked.
2) Port X for remote control, otherwise to be blocked.

VBY_K UK.indd RH 17.04.2015

4

Technical data

General			
Design		Proportional pressure relief valve	
Nominal size		**NG06**	**NG10**
Interface		Subplate mounting according to ISO 5781	
Actuation		Proportional solenoid	
Mounting position		unrestricted	
Ambient temperature	[°C]	-20 ... +60	
$MTTF_D$ value	[years]	75	
Weight	[kg]	2.4	4.5
Hydraulics			
Max. operating pressure	[bar]	P, A: 315, Port B blocked, Port T depressurized	A, B: 315, Port Y blocked, Port Y depressurized
Nominal flow	[l/min]	40	160
Adjustment range	[bar]	up to 64, 100, 160, 210, 315	
Fluid		Hydraulic oil according to DIN 51524	
Viscosity permitted	[cSt] / [mm²/s]	20 ... 400	
Viscosity recommended	[cSt] / [mm²/s]	30 ... 80	
Fluid temperature	[°C]	-20...+70 (NBR: -25...+70)	
Filtration		ISO 4406 (1999); 18/16/13	
Linearity	[%]	±3.5 at > 15 % pnom.	
Repeatability	[%]	<±2	
Hysteresis	[%]	<3	
Response time	[ms]	<150	<200
Electrical			
Duty ratio	[%]	100 ED	
Protection class		IP65 at EN 60529 (with correctly mounted plug-in connector)	
Nominal voltage	[VDC]	9	
Max. current	[A]	2.7	
Nom. current	[A]	2.5	
Ambient temperature	[°C]	-20...+70	
Coil resistance	[Ohm]	2.1 at 20 °C	
Solenoid connection		Connector as per EN 175301-803	
Power amplifier		PCD00A-400	

Characteristic pressure curves for NG06 p = f (U_{set})

Setting range max. 64 bar

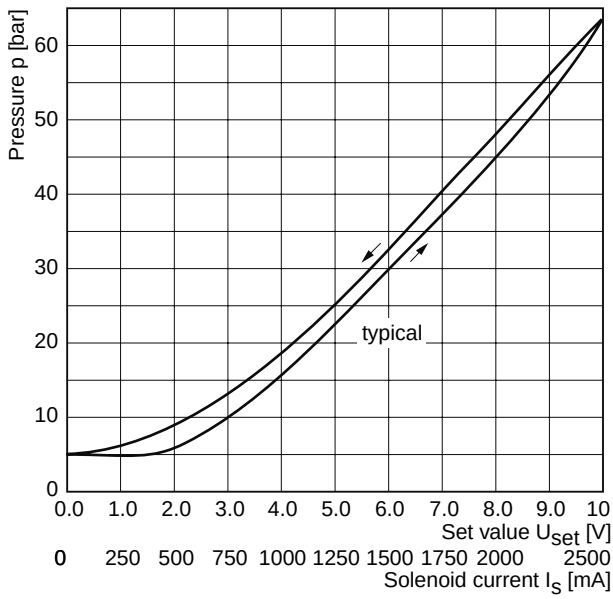

Setting range max. 210 bar

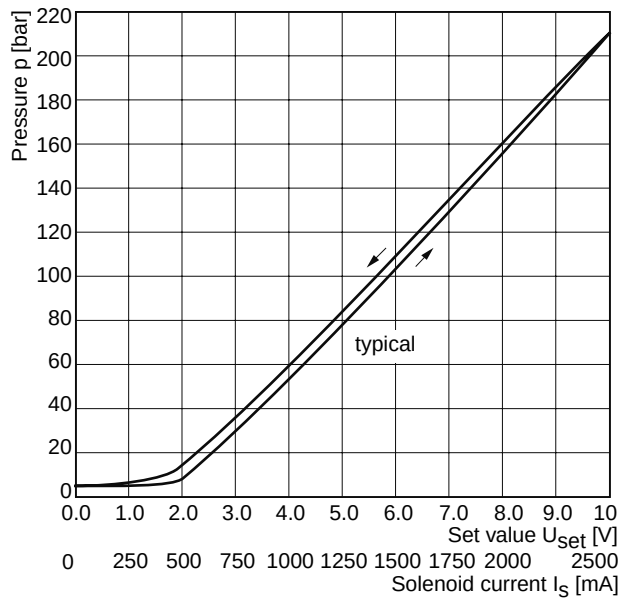

All characteristic curves measured with HLP46 at 50 °C.

NG06 p/Q characteristics

Setting range max. 64 bar

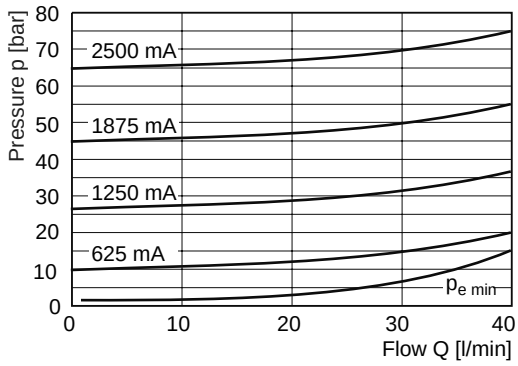

Setting range max. 100 bar

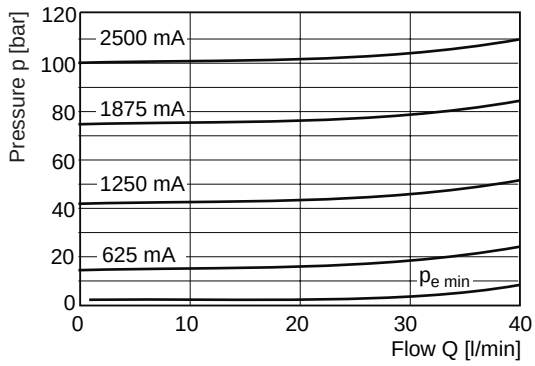

Setting range max. 160 bar

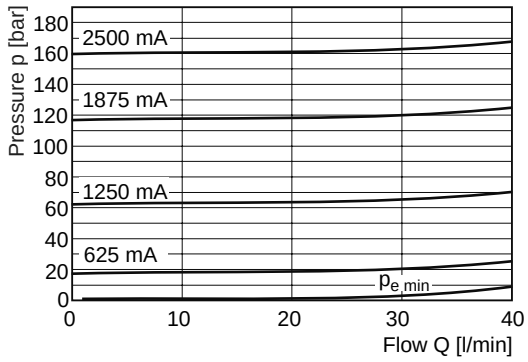

Setting range max. 210 bar

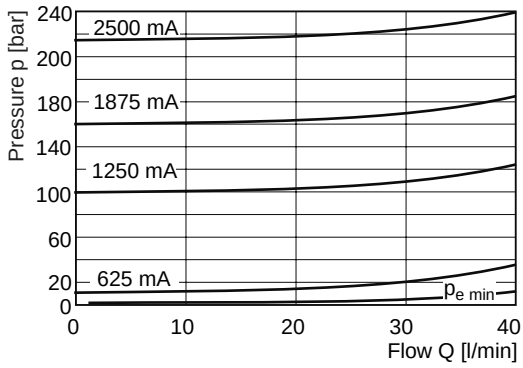

Setting range max. 315 bar

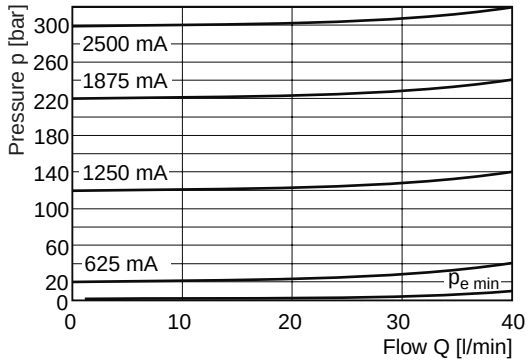

All characteristic curves measured with HLP46 at 50 °C.

4

NG06 step response signal, setting range max. 210 bar

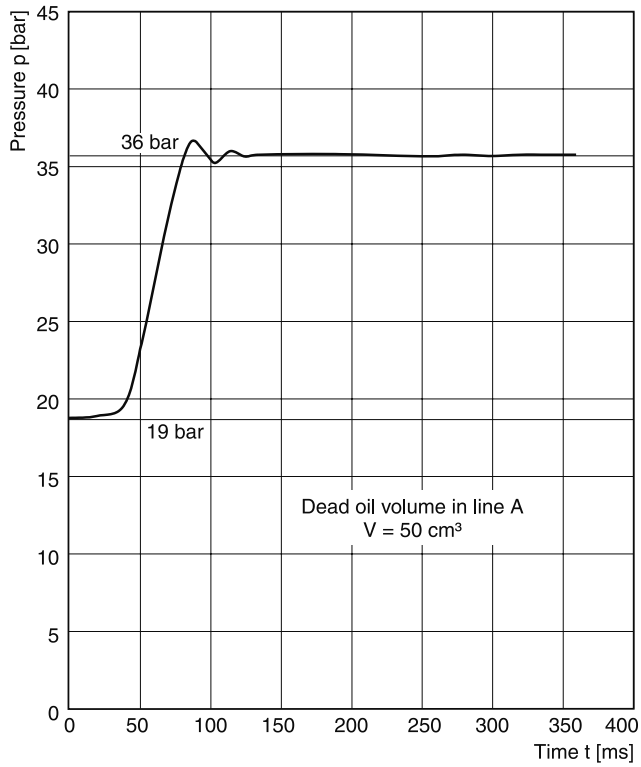

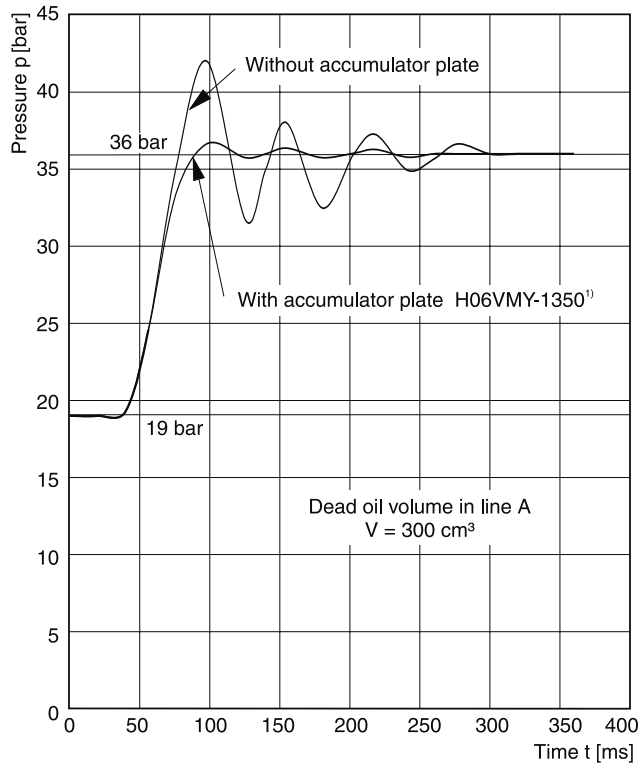

NG10 p/Q characteristics

Setting range max. 64 bar

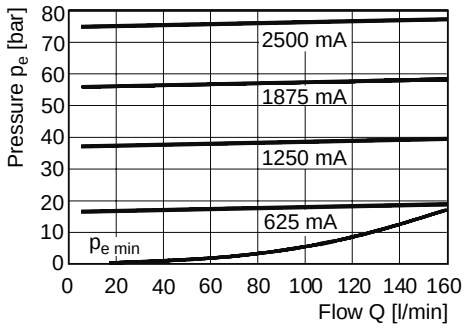

Setting range max. 100 bar

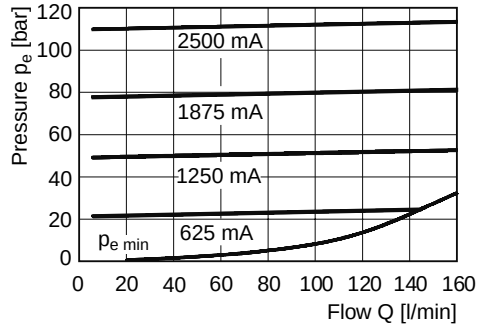

Setting range max. 160 bar

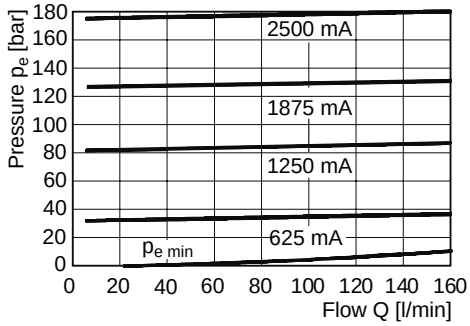

Setting range max. 210 bar

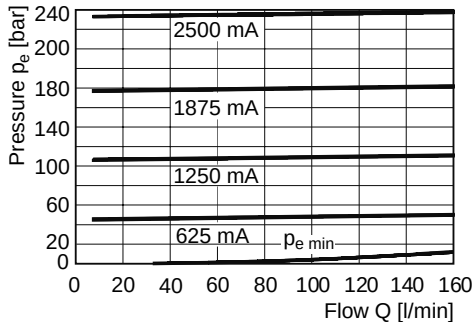

All characteristic curves measured with HLP46 at 50 °C.

[1)] See series VMY for details.

VBY_K UK.indd RH 17.04.2015

NG06

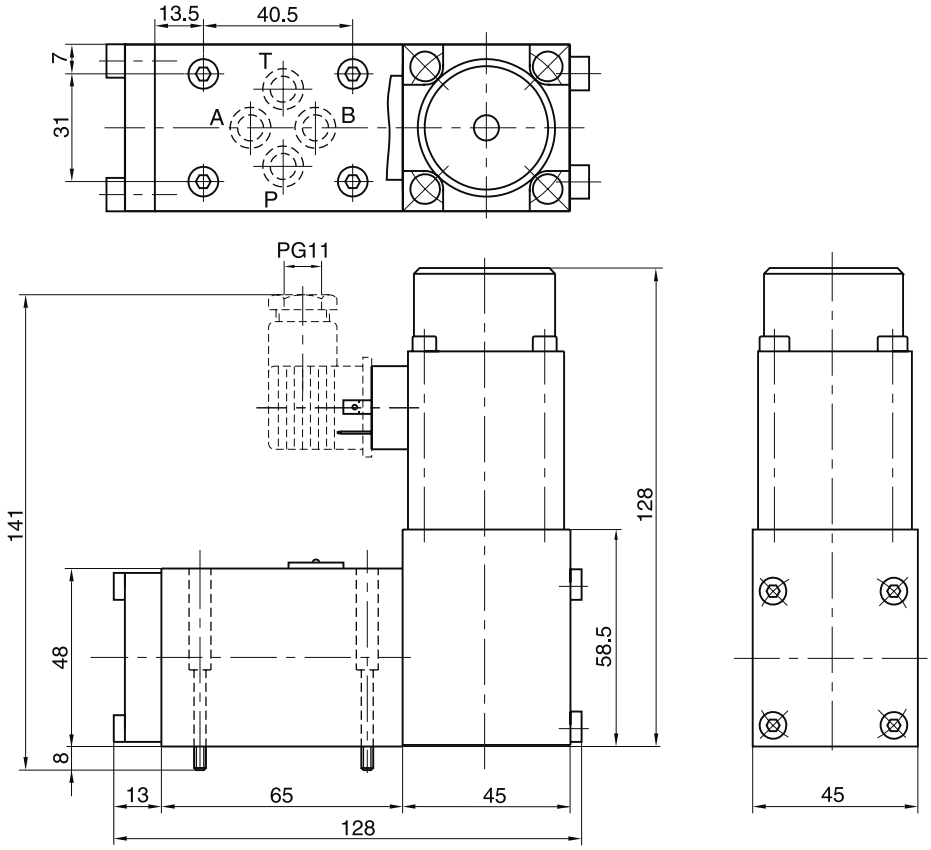

Surface finish	Bolt kit			Kit NBR	Kit FPM
R_{max}6.3 ▱ 0.01/100	BK375	4x M5x30 ISO 4762-12.9	7.6 Nm ±15 %	SK-VMY-L06-N	SK-VMY-L06-V

Mounting pattern ISO 5781-03-04-0-00

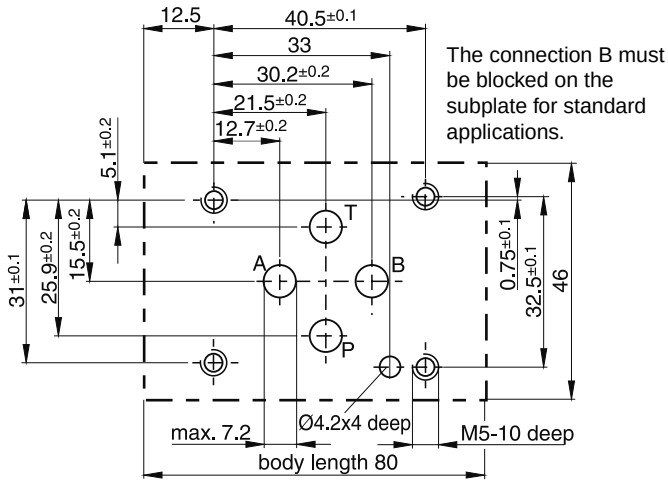

The connection B must be blocked on the subplate for standard applications.

4

NG10

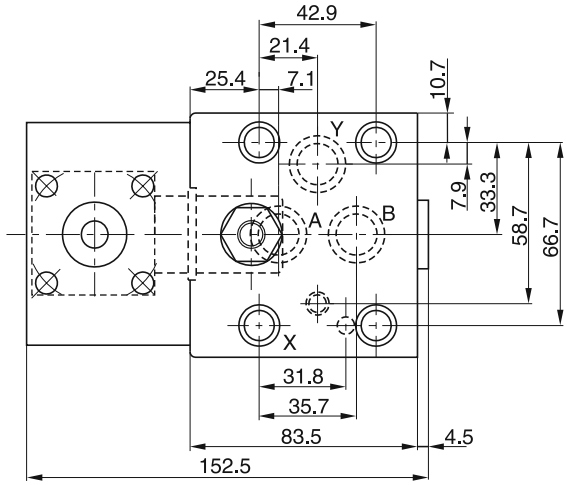

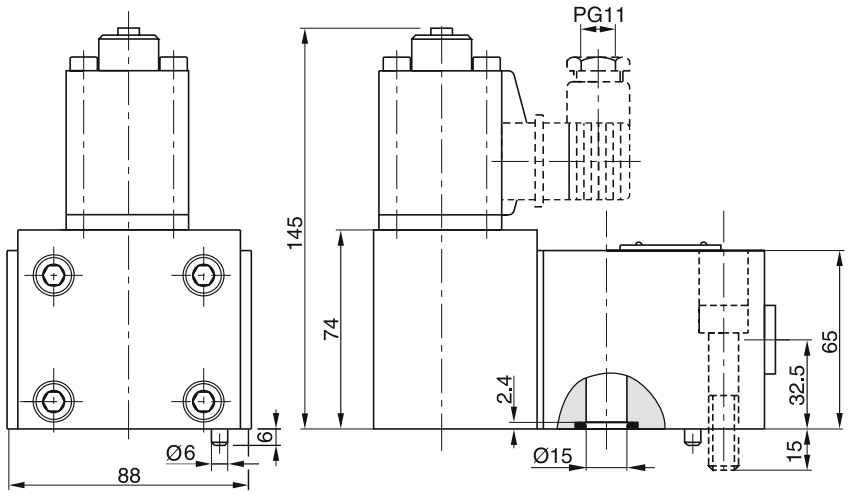

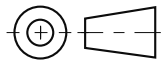

Surface finish	Bolt kit			Kit FPM
R_{max}6.3 ⏥ 0.01/100	BK389	4x M10x50 ISO 4762-12.9	63 Nm ±15 %	SK-VB/VM-A10V

Mounting pattern ISO 5781-06-07-0-00 [1)]

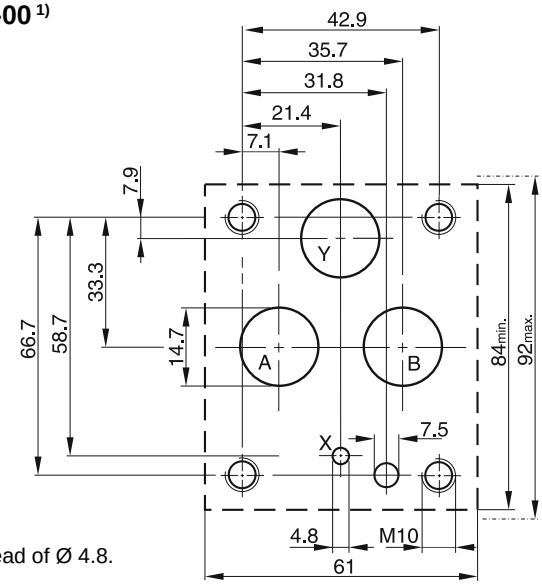

[1)] Deviating from ISO the Y port has Ø 14.7 instead of Ø 4.8.

VBY_K UK.indd RH 17.04.2015

Subplate mounted unloading valves series R4U are used to unload a circuit at low pressure. The mechanically adjustable pressure signal to unload the main stage has to be applied to port X. The pressure differential between opening and closing is nominal 15 or 28 % of the setting pressure:

28 % for pressure stages 105 and 210 bar

15 % for pressure stage 350 bar

Typical applications are unloading of pumps in an accumulator circuit or unloading of the low pressure stage of a double pump.

The R4U is available with an electrical vent valve for unpressurized circulation.

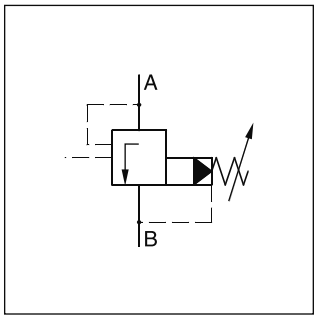

R4U

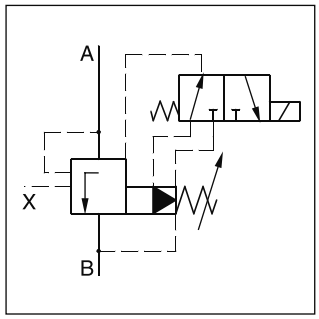

R4U with vent function

Features

- Pilot operated unloading valve
- Interface
  - subplate mounting to ISO 5781
- 3 pressure stages
- 2 vent valve functions
- 3 adjustment modes:
  - hand knob
  - acorn nut with lead seal
  - cylinder lock

R4U06

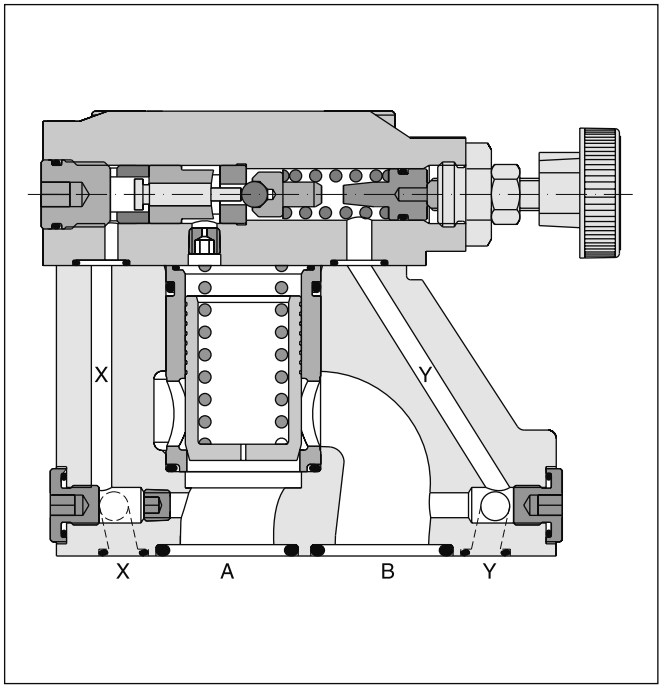

R4U06 with vent function

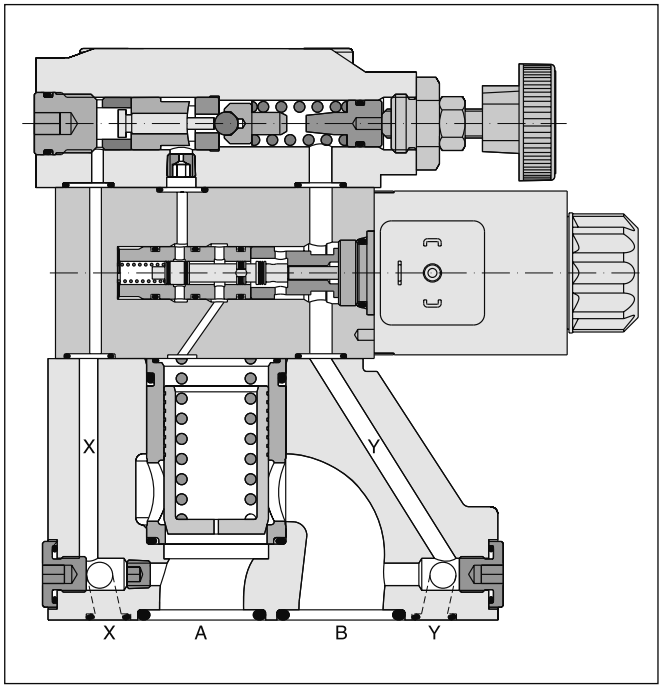

R4U

R	4	U		–	5	3					A		
Pressure valve	Interface	Unloading function	Nominal size		Max. pressure (350 bar)	Body design	Pressure stages	Adjust-ment	Pilot oil		Design series	Seals	Modifi-cations

Code	Interface	
4	Subplate mounting ISO 5781	NG10 and 25 / NG32 (y, A, B, x, Pin)

Code	Nominal size
03	NG10
06	NG25
10	NG32

Code	Pressure stages	Pressure differential
1	up to 105 bar	28 %
3	up to 210 bar	28 %
5	up to 350 bar	15 %

Code	Seals
1	NBR
5	FPM

Pilot oil	
Code	Drain line
0	Internal
1	Ext. from subplate

Code	Adjustment
1	Hand knob 32 mm diameter (standard)
3	Acorn nut with lead seal
4	Cylinder lock

R4U with vent function

R	4	U		–	5	3						A		
Pressure valve	Interface	Relief function	Nominal size		Max. pressure (350 bar)	Body design	Pressure stages	Adjust-ment	Pilot oil	Vent valve function	Solenoid voltage	Design series	Seals	Modifi-cations

Code	Interface	
4	Subplate mounting ISO 5781	NG10 and 25 / NG32 (y, A, B, x, Pin)

Code	Nominal size
03	NG10
06	NG25
10	NG32

Code	Pressure stages	Pressure differential
1	up to 105 bar	28 %
3	up to 210 bar	28 %
5	up to 350 bar	15 %

Code	Adjustment
1	Hand knob (standard)
3	Acorn nut with lead seal
4	Cylinder lock

Code	Seals
1	NBR
5	FPM

Code	Voltage
G0R	12 V =
G0Q	24 V =
GAR[1)]	98 V =
GAG[1)]	205 V =
W30	110 V / 50 Hz 120 V / 60 Hz
W31	230 V / 50 Hz 240 V / 60 Hz

Code	Vent valve
09	Solenoid not activ. unpress. circulation
11	Solenoid activated unpress. circulation

Pilot oil	
Code	Drain line
0	Internal
1	Ext. from subplate

[1)] To be used in combination with rectifier plugs at 120 VAC resp. 230 VAC power supply.

R4U

General			
Nominal size	**NG10**	**NG25**	**NG32**
Interface	Subplate mounting acc. ISO 5781		
Mounting position	Unrestricted, horizontal mounting preferred		
Ambient temperature [°C]	-20...+60		
$MTTF_D$ value [years]	75		
Weight [kg]	2.7	4.5	6.0
Hydraulic			
Max. operating pressure [bar]	Ports A and X 350, Ports B and Y depressurized		
Pressure stages [bar]	105, 210, 350		
Pressure differential	28 % (for pressure stages 105 bar and 210 bar); 15 % (for pressure stages 350 bar)		
Nominal flow [l/min]	150	350	650
Fluid	Hydraulic oil according to DIN 51524		
Viscosity, permitted [cSt] / [mm²/s]	20 ... 400		
recommended [cSt] / [mm²/s]	30 ... 80		
Fluid temperature [°C]	-20...+70 (NBR: -25...+70)		
Filtration	ISO 4406 (1999); 18/16/13		

R4U with vent function

General						
Nominal size	**NG10**		**NG25**		**NG32**	
Interface	Subplate mounting acc. ISO 5781					
Mounting position	Unrestricted, horizontal mounting preferred					
Ambient temperature [°C]	-20...+60					
$MTTF_D$ value [years]	75					
Weight [kg]	4.4		6.2		7.7	
Hydraulic						
Max. operating pressure [bar]	Ports A and X 350, Ports B and Y depressurized					
Pressure stages [bar]	105, 210, 350					
Pressure differential	28 % (for pressure stages 105 bar and 210 bar); 15 % (for pressure stages 350 bar)					
Nominal flow [l/min]	150		350		650	
Fluid	Hydraulic oil according to DIN 51524					
Viscosity, permitted [cSt]/ [mm²/s]	20 ... 400					
recommended [cSt]/ [mm²/s]	30 ... 80					
Fluid temperature [°C]	-20...+70 (NBR: -25...+70)					
Filtration	ISO 4406 (1999); 18/16/13					
Electrical (solenoid)						
Duty ratio [%]	100 ED; CAUTION: coil temperature up to 150 °C possible					
Protection class	IP65 in according with EN 60529 (with correctly mounted plug-in connector)					
Code	G0R	G0Q	GAR	GAG	W30	W31
Supply voltage [V]	12 V =	24 V =	98 V =	205 V =	110 V / 50 Hz 120 V / 60 Hz	230 V / 50 Hz 240 V / 60 Hz
Tolerance supply voltage [%]	±10	±10	±10	±10	±5	±5
Current consumption hold [A]	2.72	1.29	0.33	0.13	0.6 / 0.55	0.3 / 0.27
in rush [A]	2.72	1.29	0.33	0.13	2.5 / 2.4	1.25 / 1.2
Power consumption hold [W]	32.7	31	31.9	28.2	70 / 70 VA	70 / 70 VA
in rush [W]	32.7	31	31.9	28.2	280 / 290 VA	280 / 290 VA
Solenoid connection	Connector as per EN175301-803, solenoid identification as per ISO 9461					
Wiring min. [mm²]	3 x 1.5 recommended					
Wiring length max. [m]	50 recommended					

p/Q performance curve [1)]

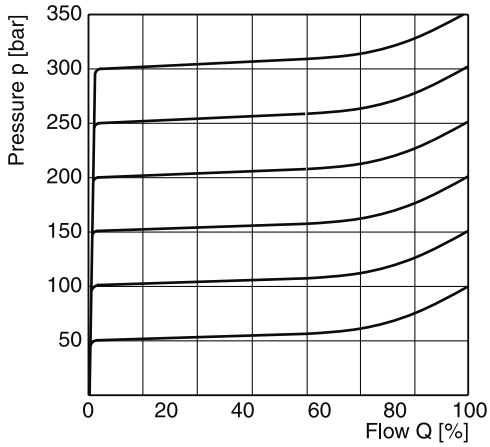

Minimum pressure curve

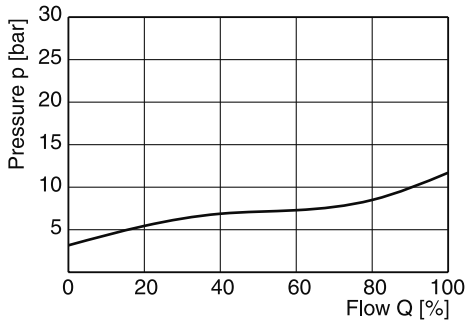

All characteristic curves measured with HLP46 at 50 °C.

[1)] The performance curves are measured with external drain.
For internal drain the tank pressure has to be added to curve.

R4U

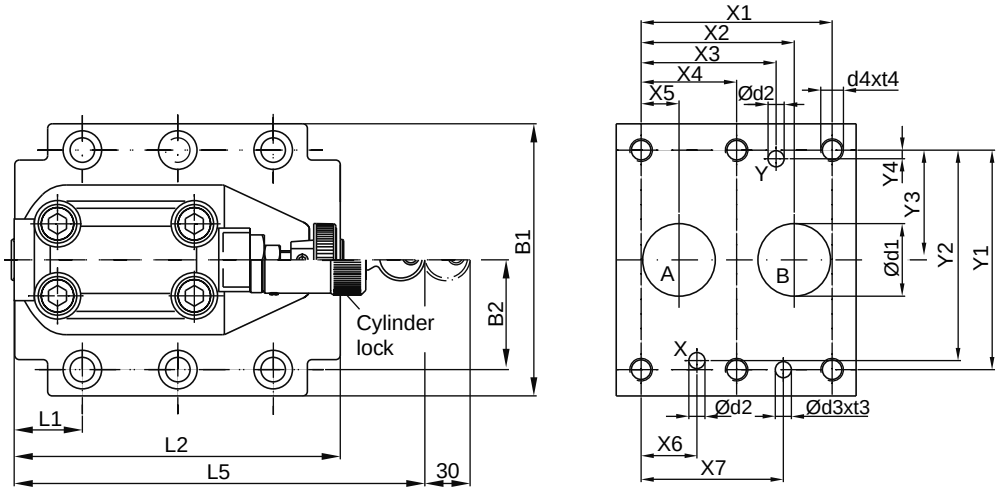

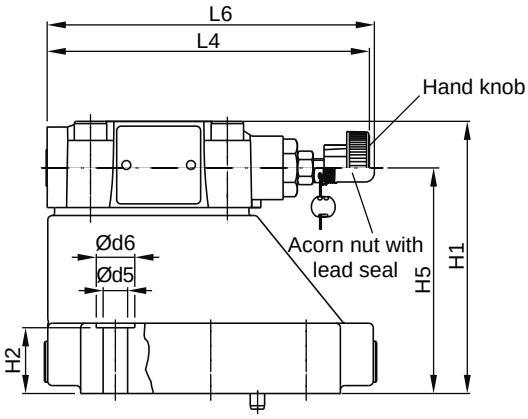

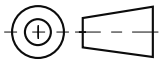

NG	ISO-code	x1	x2	x3	x4	x5	x6	x7	y1	y2	y3	y4	y5	y6
10	5781-06-07-0-00	42.9	35.8	21.5	–	7.2	21.5	31.8	66.7	58.8	33.4	7.9	–	–
25	5781-08-10-0-00	60.3	49.2	39.7	–	11.1	20.6	44.5	79.4	73	39.7	6.4	–	–
32	5781-10-13-0-00	84.2	67.5	59.5	42.1	16.7	24.6	62.7	96.8	92.8	48.4	3.8	–	–

Tolerance at X and Y pin holes and screw holes ±0.1, at port holes ±0.2.

NG	ISO-code	B1	B2	H1	H2	H3	H4	H5	H6	L1	L2	L3	L4	L5	L6
10	5781-06-07-0-00	87.3	33.35	83	21	–	–	62.5	–	25	90.8	–	143	181	144.8
25	5781-08-10-0-00	105	39.7	107.5	29	–	–	87	–	30.9	123	–	143	181	144.8
32	5781-10-13-0-00	120	48.4	120	30	–	–	99.5	–	29.8	143.5	–	143	181	144.8

NG	ISO-code	d1max	d2max	d3	t3	d4	t4	d5	d6	Subplate [1]
10	5781-06-07-0-00	15	7	7.1	8	M10	16	10.8	17	SPP 3M6B 910
25	5781-08-10-0-00	23.4	7.1	7.1	8	M10	18	10.8	17	SPP 6M8B 910
32	5781-10-13-0-00	32	7.1	7.1	8	M10	20	10.8	17	SPP 10M12B 910

NG	Bolt kit			Kit NBR	Kit FPM	Surface finish
10	BK505	4x M10x35 ISO 4762-12.9	63 Nm ±15 %	S26-58507-0	S26-58507-5	R_{max}6.3 ▱ 0.01/100
25	BK485	4x M10x45 ISO 4762-12.9	63 Nm ±15 %	S26-58475-0	S26-58475-5	
32	BK506	6x M10x45 ISO 4762-12.9	63 Nm ±15 %	S26-58508-0	S26-58508-5	

[1] Details see chapter 12, series SPP.

R4U UK.indd RH 17.04.2015

4

R4U with vent function

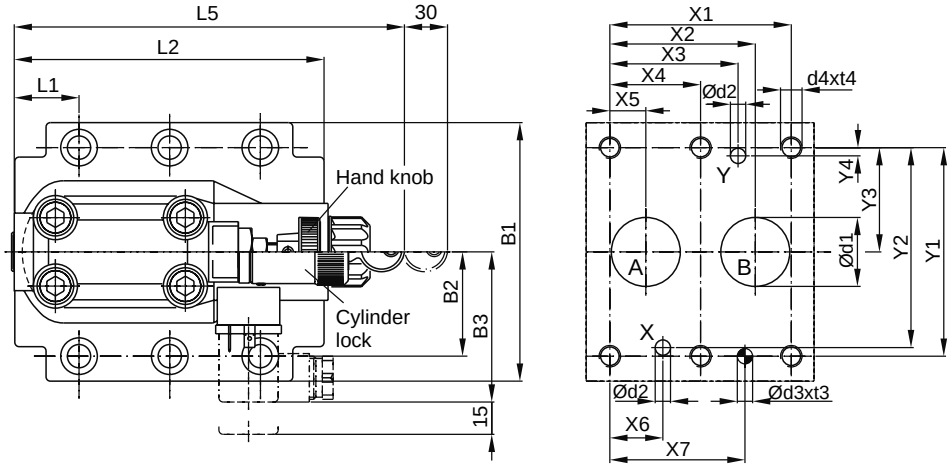

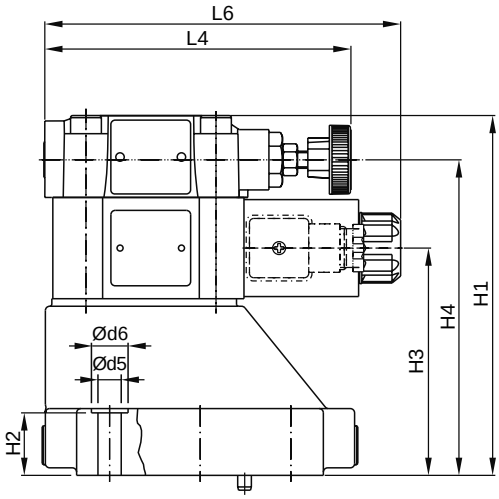

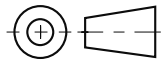

NG	ISO-code	x1	x2	x3	x4	x5	x6	x7	y1	y2	y3	y4	y5	y6
10	5781-06-07-0-00	42.9	35.8	21.5	–	7.2	21.5	31.8	66.7	58.8	33.4	7.9	–	–
25	5781-08-10-0-00	60.3	49.2	39.7	–	11.1	20.6	44.5	79.4	73	39.7	6.4	–	–
32	5781-10-13-0-00	84.2	67.5	59.5	42.1	16.7	24.6	62.7	96.8	92.8	48.4	3.8	–	–

Tolerance at X and Y pin holes and screw holes ±0.1, at port holes ±0.2.

NG	ISO-code	B1	B2	B3	H1	H2	H3	H4	H5	H6	L1	L2	L3	L4	L5	L6
10	5781-06-07-0-00	87.3	33.35	70	130	21	68.5	109.5	–	–	25	90.8	–	143	181	165.6
25	5781-08-10-0-00	105	39.7	70	154.5	29	93	134	–	–	30.9	123	–	143	181	165.6
32	5781-10-13-0-00	120	48.4	70	167	30	105.5	146.5	–	–	29.8	143.5	–	143	181	165.6

NG	ISO-code	d1max	d2max	d3	t3	d4	t4	d5	d6	Subplate [1]
10	5781-06-07-0-00	15	7	7.1	8	M10	16	10.8	17	SPP 3M6B 910
25	5781-08-10-0-00	23.4	7.1	7.1	8	M10	18	10.8	17	SPP 6M8B 910
32	5781-10-13-0-00	32	7.1	7.1	8	M10	20	10.8	17	SPP 10M12B 910

NG	Bolt kit			Kit NBR	Kit FPM	Surface finish
10	BK505	4x M10x35 ISO 4762-12.9	63 Nm ±15 %	S26-58507-0 [2]	S26-58507-5 [2]	R_{max}6.3 ⏥ 0.01/100
25	BK485	4x M10x45 ISO 4762-12.9	63 Nm ±15 %	S26-58475-0 [2]	S26-58475-5 [2]	
32	BK506	6x M10x45 ISO 4762-12.9	63 Nm ±15 %	S26-58508-0 [2]	S26-58508-5 [2]	
VV01, AC solenoid				S26-35237-0	S26-35237-5	
VV01, DC solenoid				S56-40609-0	S56-40609-5	

[1] Details see chapter 12, series SPP.
[2] Please combine seal kit of one size with seal kit of VV01 DC / AC solenoid for complete seal kit.

R4U UK.indd RH 17.04.2015

Subplate mounted sequence valves series R4S enable a hydraulic system to operate in a pressure sequence. When the system pressure reaches the setting pressure the valve opens and permits flow to the secondary sub-system.

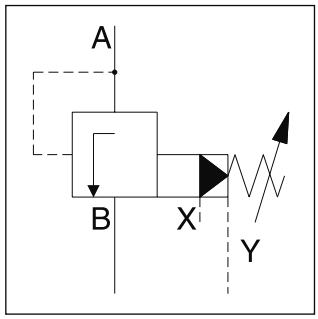

Features

- Pilot operated sequence valve
- Subplate mounting acc. to ISO 5781
- 3 pressure stages
- 3 adjustment modes:
  - hand knob
  - acorn nut with lead seal
  - cylinder lock

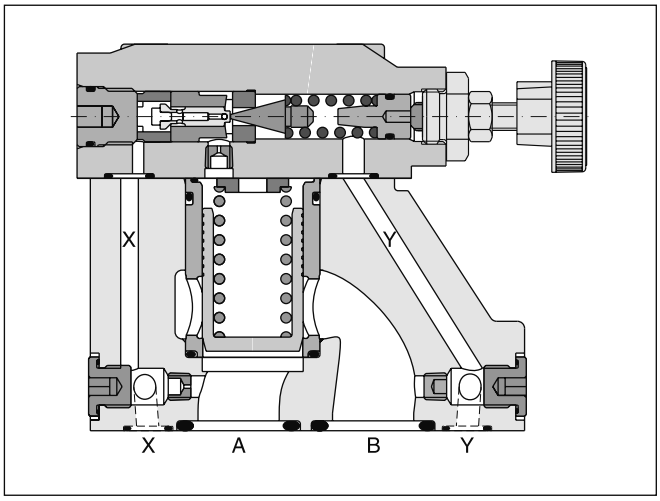

4

Ordering code

R	4	S	☐ –	5	3	☐	☐	1	A	☐
Pressure valve	Interface	Relief function	Nominal size	Max. pressure (350 bar)	Body design	Pressure stages	Adjust-ment	External drain from subplate	Design series	Seals

Code	Interface	
4	Subplate mounting ISO 5781	NG10 and 25 / NG32 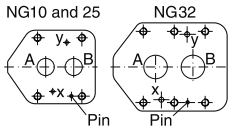

Code	Nominal size
03	NG10
06	NG25
10	NG32

Code	Pressure stages
1	up to 105 bar
3	up to 210 bar
5	up to 350 bar

Code	Seals
1	NBR
5	FPM

Code	Adjustment
1	Hand knob 32 mm diameter (standard)
3	Acorn nut with lead seal
4	Cylinder lock

Technical data

General				
Nominal size		**NG10**	**NG25**	**NG32**
Interface		Subplate mounting acc. ISO 5781		
Mounting position		Unrestricted, horizontal mounting preferred		
Ambient temperature	[°C]	-20...+60		
$MTTF_D$ value	[years]	75		
Weight	[kg]	2.7	4.5	6.0
Hydraulic				
Max. operating pressure	[bar]	Ports A, B and X 350, port Y depressurized		
Pressure stages	[bar]	105, 210, 350		
Nominal flow	[l/min]	150	350	650
Fluid		Hydraulic oil according to DIN 51524		
Viscosity, permitted	[cSt] / [mm²/s]	20 ... 400		
recommended	[cSt] / [mm²/s]	30 ... 80		
Fluid temperature	[°C]	-20...+70 (NBR: -25...+70)		
Filtration		ISO 4406 (1999); 18/16/13		

4

Typical pressure characteristics at closing point

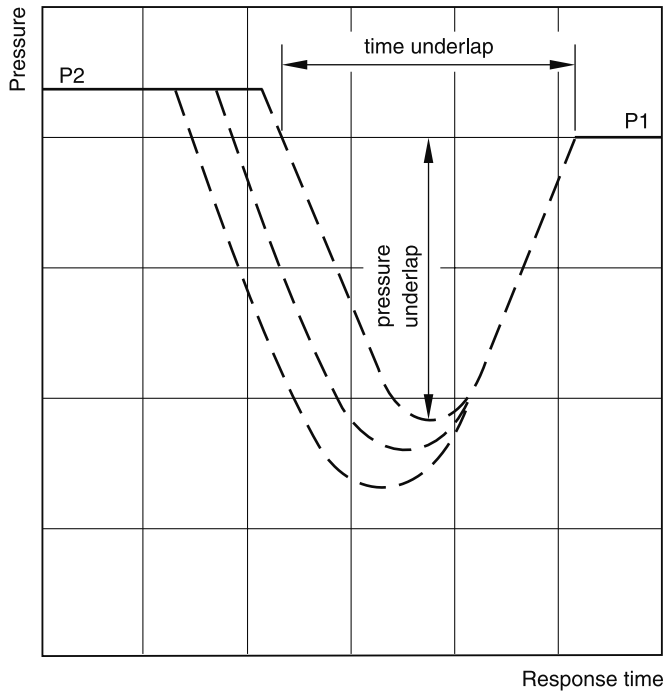

P1 = setting pressure

P2 = operating pressure

Time and pressure underlap depend on the characteristics of the specific system.

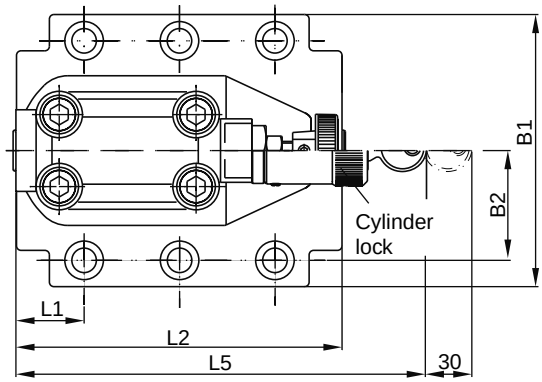

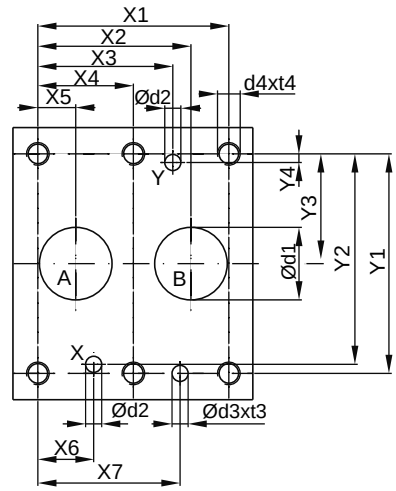

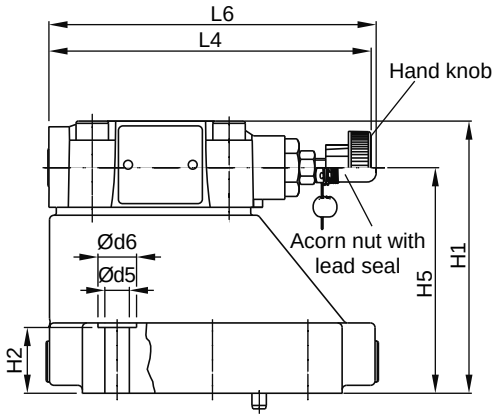

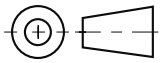

NG	ISO-code	x1	x2	x3	x4	x5	x6	x7	y1	y2	y3	y4	y5	y6
10	5781-06-07-0-00	42.9	35.8	21.5	–	7.2	21.5	31.8	66.7	58.8	33.4	7.9	–	–
25	5781-08-10-0-00	60.3	49.2	39.7	–	11.1	20.6	44.5	79.4	73	39.7	6.4	–	–
32	5781-10-13-0-00	84.2	67.5	59.5	42.1	16.7	24.6	62.7	96.8	92.8	48.4	3.8	–	–

Tolerance at X and Y pin holes and screw holes ±0.1, at port holes ±0.2.

NG	ISO-code	B1	B2	H1	H2	H3	H4	H5	H6	L1	L2	L3	L4	L5	L6
10	5781-06-07-0-00	87.3	33.35	83	21	–	–	62.5	–	25	90.8	–	143	181	144.8
25	5781-08-10-0-00	105	39.7	107.5	29	–	–	87	–	30.9	123	–	143	181	144.8
32	5781-10-13-0-00	120	48.4	120	30	–	–	99.5	–	29.8	143.5	–	143	181	144.8

NG	ISO-code	d1max	d2max	d3	t3	d4	t4	d5	d6	Subplate [1]
10	5781-06-07-0-00	15	7	7.1	8	M10	16	10.8	17	SPP 3M6B 910
25	5781-08-10-0-00	23.4	7.1	7.1	8	M10	18	10.8	17	SPP 6M8B 910
32	5781-10-13-0-00	32	7.1	7.1	8	M10	20	10.8	17	SPP 10M12B 910

NG	Bolt kit			Kit NBR	Kit FPM	Surface finish
10	BK505	4x M10x35 ISO 4762-12.9	63 Nm ±15 %	S26-58507-0	S26-58507-5	R_{max}6.3 ▱ 0.01/100
25	BK485	4x M10x45 ISO 4762-12.9	63 Nm ±15 %	S26-58475-0	S26-58475-5	
32	BK506	6x M10x45 ISO 4762-12.9	63 Nm ±15 %	S26-58508-0	S26-58508-5	

[1] Details see chapter 12, series SPP.

R4S UK.indd RH 17.04.2015

Direct operated pressure reducing valve with manual adjustment. Series VM is a direct operated, spring loaded 3-way pressure reducing valve, that is open in neutral position. The valve closes the connection when the pre-set pressure is exceeded.

Primary port:	NG06 - P,	NG10 - B
Secondary port:	NG06 - A,	NG10 - A
Tank port:	NG06 - T,	NG10 - Y

If the pressure increases due to an external influence the spool opens to port T until the pre-set pressure is reached.

NG06

NG10

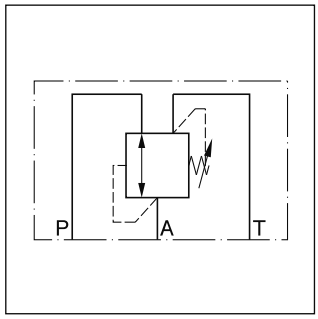

NG06

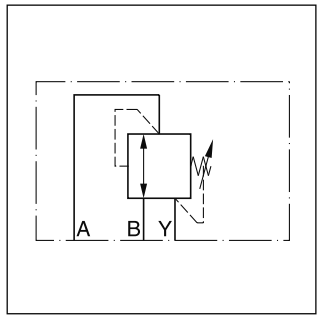

NG10

4

Features

- Spool type valve
- Subplate mounting acc. to ISO 5781
- 5 pressure stages at NG06
- 3 pressure stages at NG10
- 2 adjustment modes

NG06

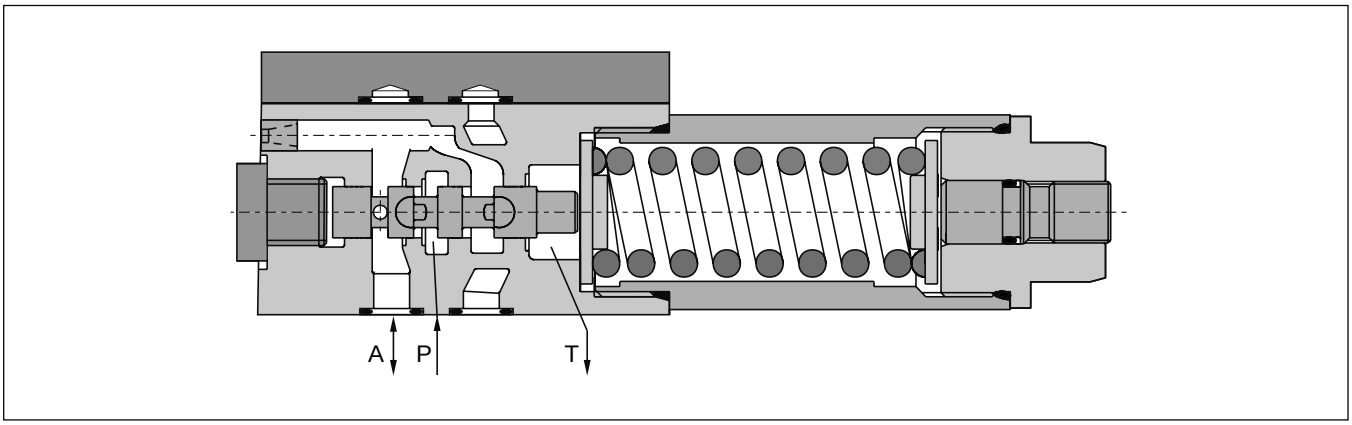

NG10

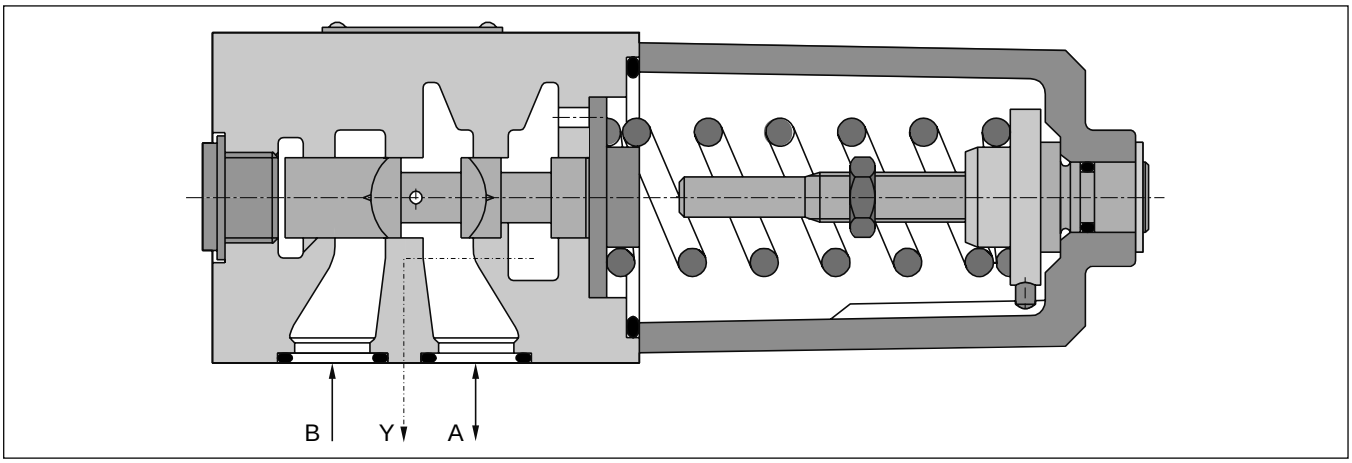

Ordering code

VM	☐	A	☐	V	☐	☐	☐
Pressure reducing valve	**Pressure stages**	**Adjustment screw with hexagon socket**	**Nominal size**	**FPM seals**	**Gauge port**	**Lock**	**Design series** (not required for ordering)

Code	Pressure stages
025 [1]	up to 25 bar
064	**up to 64 bar**
125 [2]	**up to 125 bar**
160 [1]	**up to 160 bar**
210	**up to 210 bar**
350 [1]	up to 350 bar

Code	Lock
omit	**–**
Z	Key lock

Code	Gauge port
G [1]	**G 1/4”**
M [2]	**M18x1.5**

Code	Nominal size
06	**NG06**
10	**NG10**

Bold letters =
Short-term availability

[1] Only NG06.
[2] Only NG10.

Technical data

General			
Design		Pressure reducing valve, direct operated, spool type	
Nominal size		**NG06 (CETOP 03 / NFPA D03)**	**NG10 (CETOP 05 / NFPA D05)**
Interface		Subplate mounting according to ISO 5781	
Mounting position		unrestricted	
Ambient temperature	[°C]	-20...+60	
$MTTF_D$ value	[years]	150	
Weight	[kg]	1.3	3.7
Hydraulics			
Max. operating pressure	[bar]	Port P and A 350 Port T depressurized	Port A and B 350 Port Y depressurized
Pressure stages	[bar]	25; 64; 160; 210; 350	64; 125; 210
Nominal flow	[l/min]	25	60
Fluid		Hydraulic oil according to DIN 51524	
Fluid temperature	[°C]	-20...+70	
Viscosity permitted recommended	[cSt]/ [mm²/s] [cSt]/ [mm²/s]	20...400 30...80	
Filtration		ISO 4406 (1999); 18/16/13	

4

NG06 setting pressure max. 25 bar

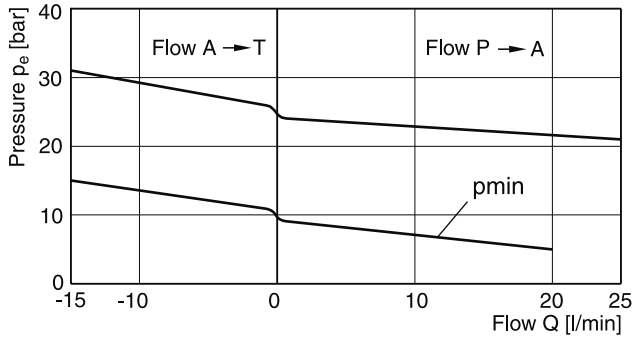

NG06 setting pressure max. 64 bar

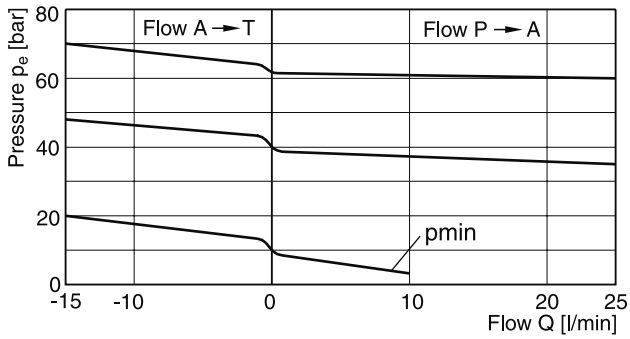

NG06 setting pressure max. 160 or 210 bar

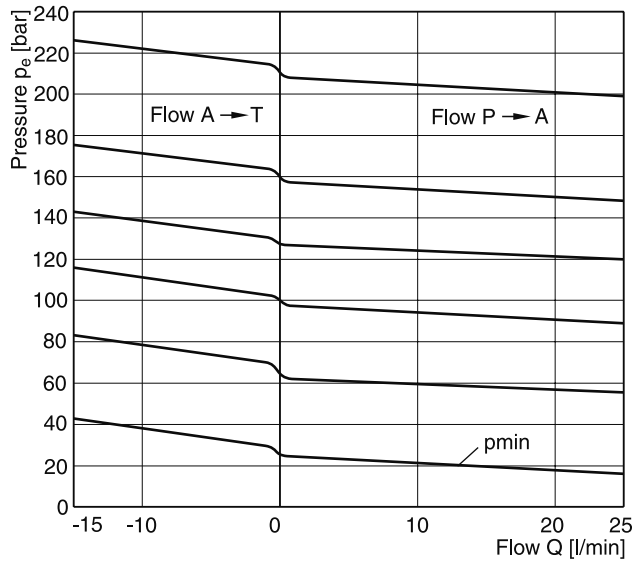

NG10 setting pressure max. 64 bar

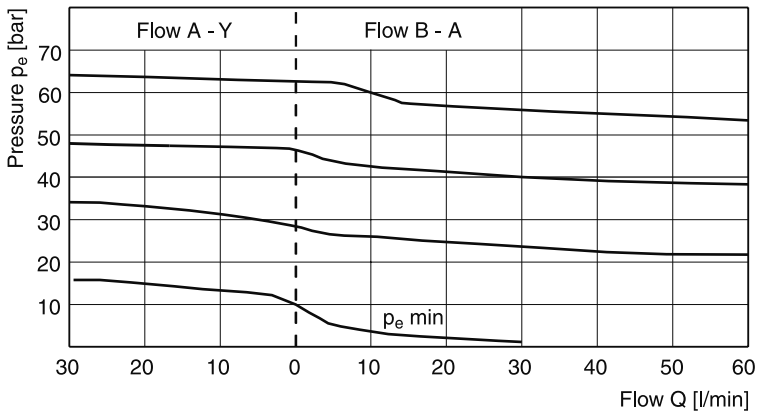

NG10 setting pressure max. 210 bar

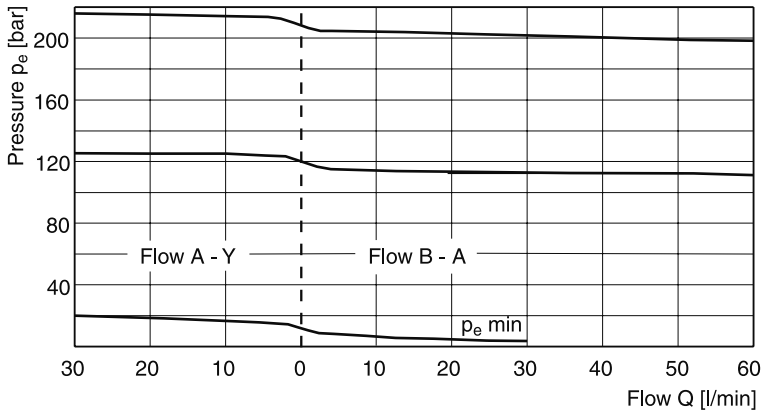

All characteristic curves measured with HLP46 at 50 °C.

VM UK.indd RH 17.04.2015

NG06

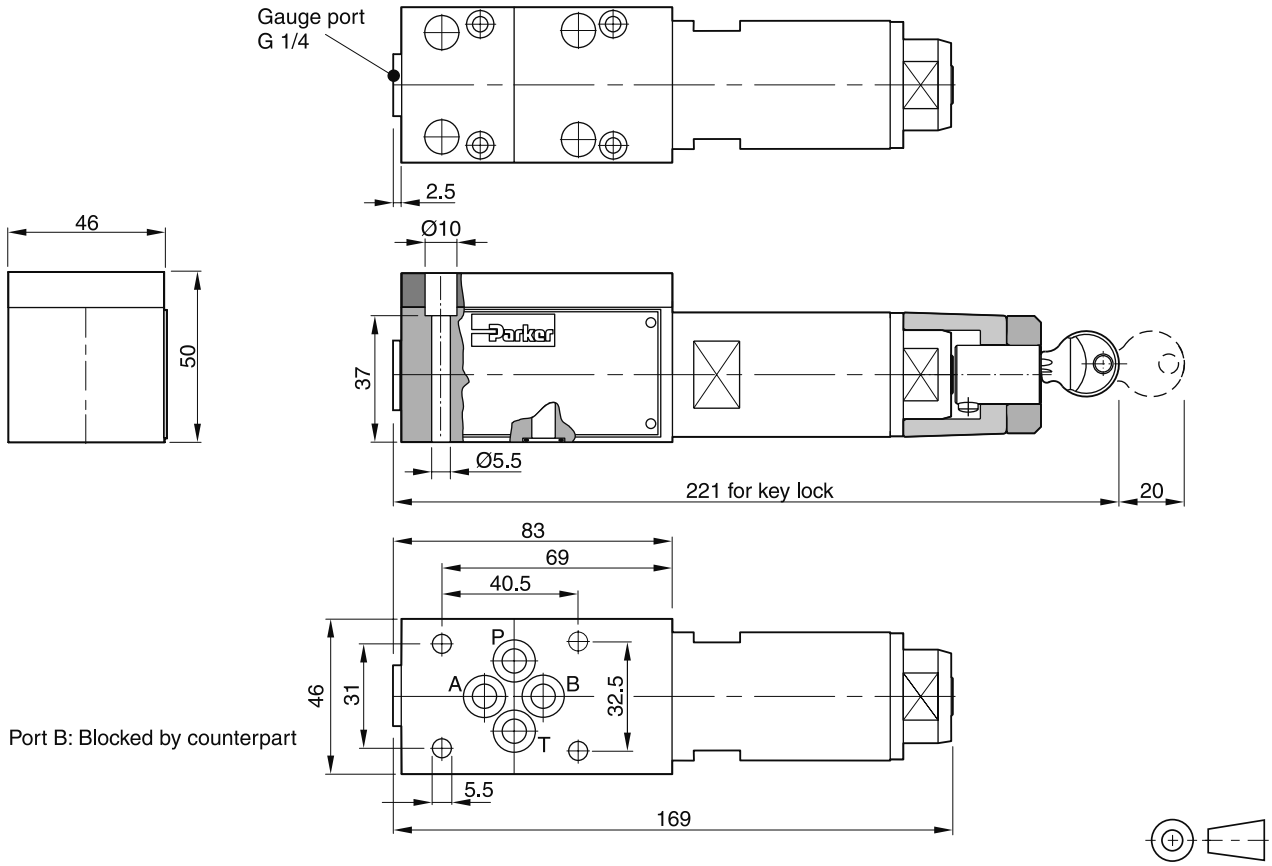

Surface finish	Bolt kit			Kit FPM
R_{max}6.3 ▱ 0.01/100	BK443	4x M5x45 ISO 4762-12.9	7.6 Nm ±15 %	SK-VB/VM/VS-A06V

Mounting pattern ISO 5781-03-04-0-00

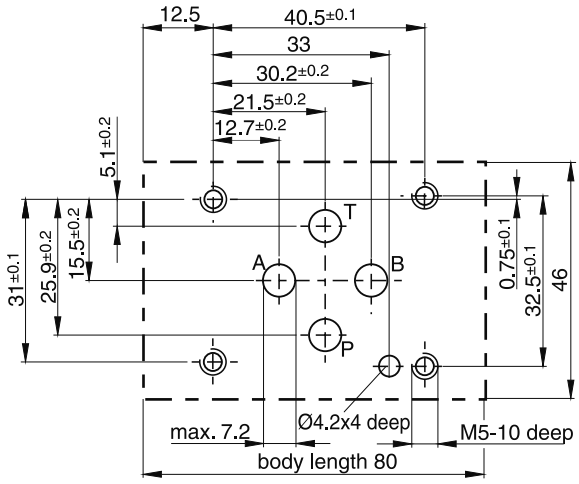

NG10

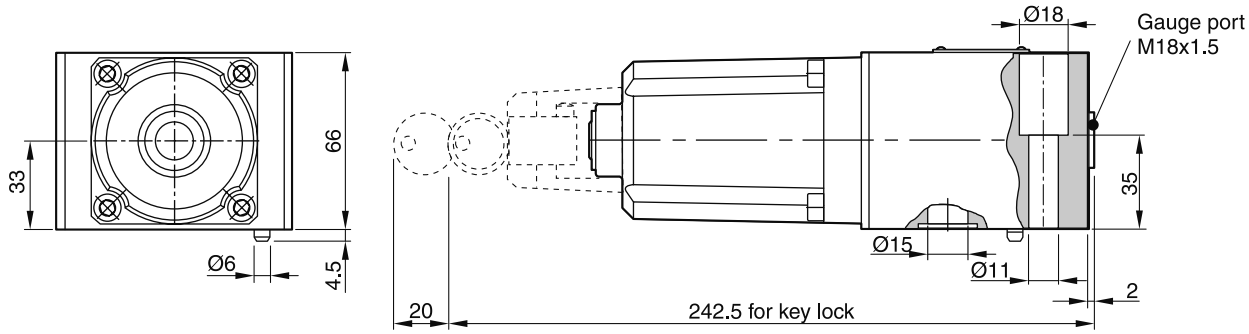

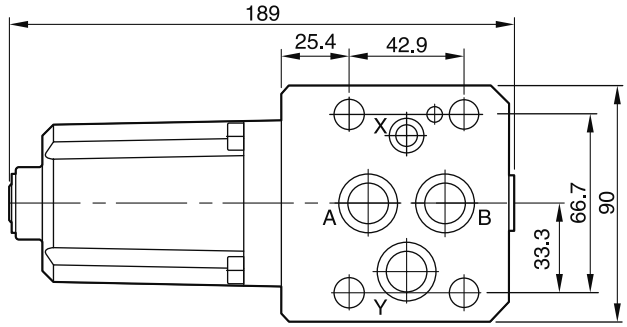

Surface finish	Bolt kit			Kit FPM
R_{max}6.3 ▱ 0.01/100	BK389	4x M10x50 ISO 4762-12.9	63 Nm ±15 %	SK-VB/VM-A10V

Mounting pattern ISO 5781-06-07-0-00 [1)]

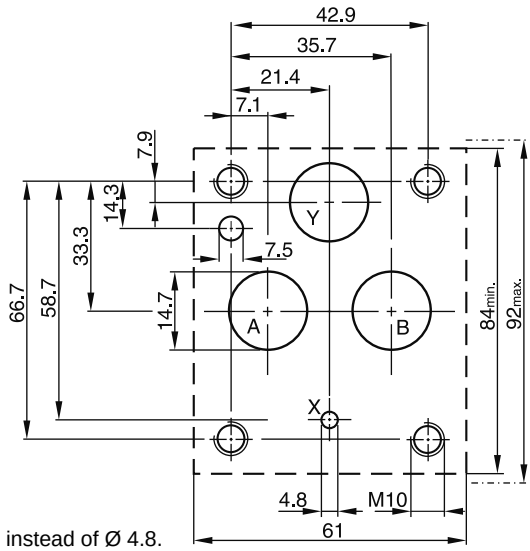

[1)] Deviating from ISO the Y port has Ø 14.7 instead of Ø 4.8.

Subplate mounted pressure reducing valves series R4R are used to control the pressure in the secondary part of the hydraulic system. Independent of the primary pressure the secondary pressure is reduced to the pressure setting. In order to avoid undesired motion the valves are normally closed.

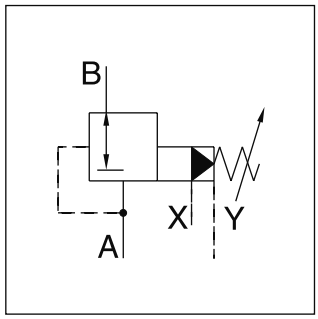

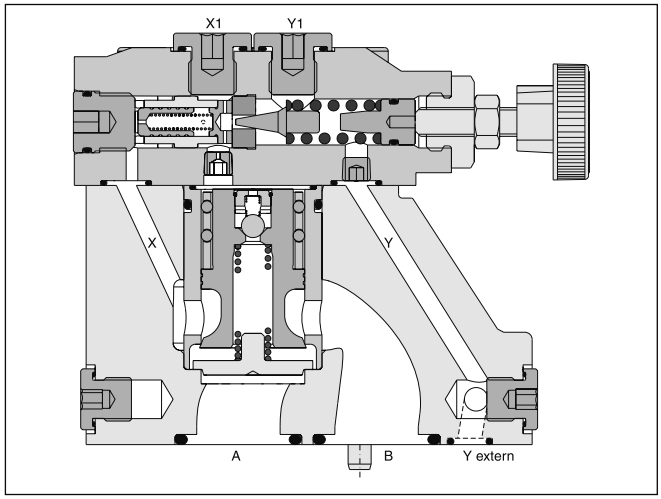

Features

- Pilot operated with manual adjustment
- Subplate mounting acc. to ISO 5781
- Normally closed to avoid unintended motion
- 3 pressure stages
- 3 adjustment modes:
  - hand knob
  - acorn nut with lead seal
  - cylinder lock

Ordering code

R	4	R		–	5	9					B		
Pressure valve	Interface	Reducing function	Nominal size		Max. pressure (350 bar)	Pilot ports G1/4“	Pressure stages	Adjust-ment	Pilot oil		Design series	Seals	Modifi-cations

Code	Interface	
4	Subplate mounting ISO 5781	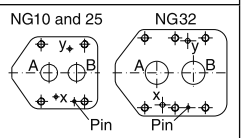

Code	Nominal size
03	NG10
06	NG25
10	NG32

Code	Pressure stages [1)]
1	up to 105 bar
3	up to 210 bar
5	up to 350 bar

Code	Seals
1	NBR
5	FPM

Pilot oil		
Code	Pilot	Drain
1	Internal	External from Y
2	Internal	External from Y1

Code	Adjustment
1	Hand knob 32 mm diameter (standard)
3	Acorn nut with lead seal
4	Cylinder lock

[1)] Further pressure stages on request.

R4R UK.indd RH 17.04.2015

General			
Nominal size	**NG10**	**NG25**	**NG32**
Interface	Subplate mounting acc. ISO 5781		
Mounting position	Unrestricted, horizontal mounting preferred		
Ambient temperature [°C]	-20...+60		
$MTTF_D$ value [years]	75		
Weight [kg]	4.8	7.2	13.5
Hydraulic			
Max. operating pressure [bar]	Ports A, B and X 350, port Y depressurized		
Pressure stages [bar]	105, 210, 350		
Nominal flow [l/min]	150	350	500
Fluid	Hydraulic oil according to DIN 51524		
Viscosity, permitted [cSt] / [mm²/s] recommended [cSt] / [mm²/s]	20 ... 400 30 ... 80		
Fluid temperature [°C]	-20...+70 (NBR: -25...+70)		
Filtration	ISO 4406 (1999); 18/16/13		

Reduced pressure pA versus flow Q
R4R03 [1)]

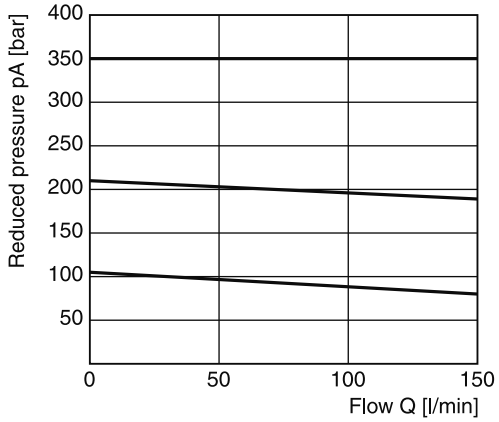

Minimum pressure curve

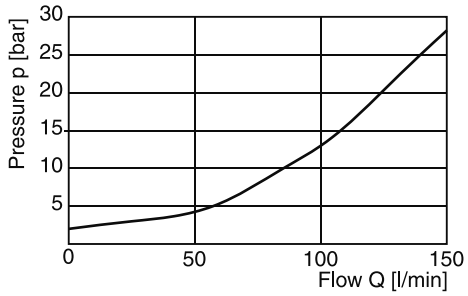

Reduced pressure pA versus flow Q
R4R06 [1)]

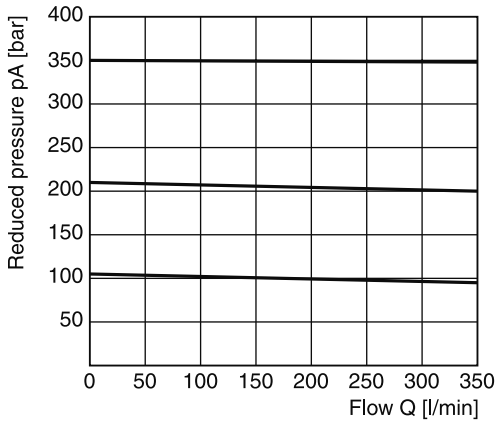

Minimum pressure curve

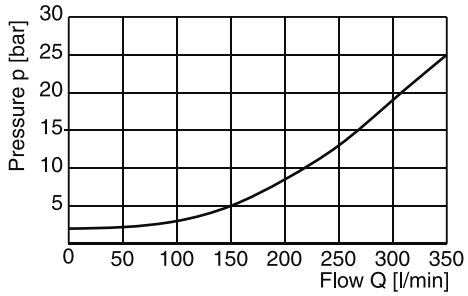

Reduced pressure pA versus flow Q
R4R10 [1)]

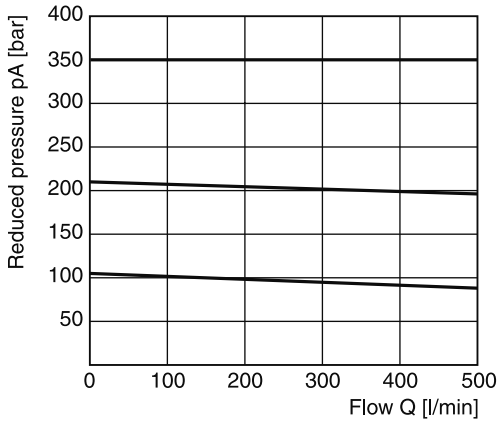

Minimum pressure curve

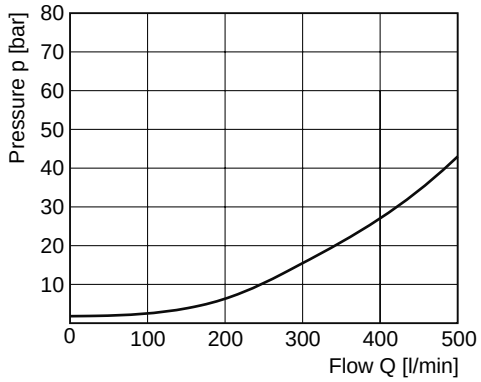

All characteristic curves measured with HLP46 at 50 °C.

[1)] Measured at 350 bar primary pressure pB.

R4R UK.indd RH 17.04.2015

4

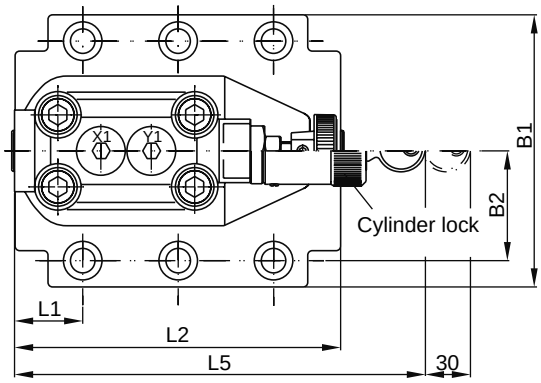

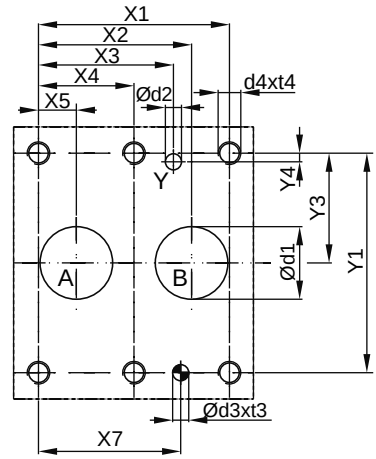

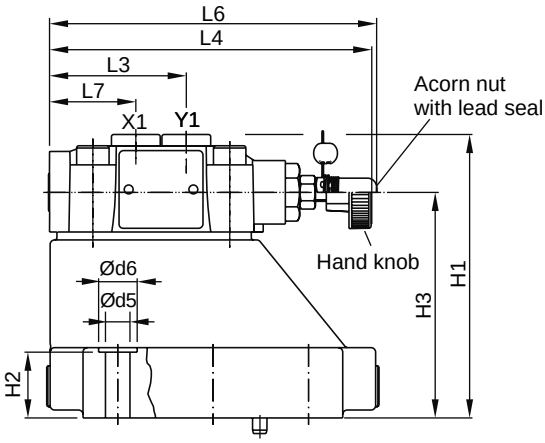

X1: G 1/4“

Y1: G 1/4“

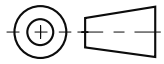

NG	ISO-code	x1	x2	x3	x4	x5	x6	x7	y1	y2	y3	y4	y5	y6
10	5781-06-07-0-00	42.9	35.8	21.5	–	7.2	–	31.8	66.7	–	33.4	7.9	–	–
25	5781-08-10-0-00	60.3	49.2	39.7	–	11.1	–	44.5	79.4	–	39.7	6.4	–	–
32	5781-10-13-0-00	84.2	67.5	59.5	42.1	16.7	–	62.7	96.8	–	48.4	3.8	–	–

Tolerance for all dimensions ±0.2

NG	ISO-code	B1	B2	H1	H2	H3	H4	H5	H6	L1	L2	L3	L4	L5	L6	L7
10	5781-06-07-0-00	87.3	33.35	87	21	62.5	–	–	–	25	90.8	60.8	143	181	144.8	38.6
25	5781-08-10-0-00	105	39.7	111.5	29	87	–	–	–	30.9	123	60.8	143	181	144.8	38.6
32	5781-10-13-0-00	120	48.4	124	30	99.5	–	–	–	29.8	143.5	60.8	143	181	144.8	38.6

NG	ISO-code	d1max	d2max	d3	t3	d4	t4	d5	d6	Subplate [1]
10	5781-06-07-0-00	15	7	7.1	8	M10	16	10.8	17	SPP 3M6B 910
25	5781-08-10-0-00	23.4	7.1	7.1	8	M10	18	10.8	17	SPP 6M8B 910
32	5781-10-13-0-00	32	7.1	7.1	8	M10	20	10.8	17	SPP 10M12B 910

NG	Bolt kit			Kit		Surface finish
				NBR	FPM	
10	BK505	4x M10x35 ISO 4762-12.9	63 Nm ±15 %	S26-58507-0	S26-58507-5	R_{max}6.3 ▱ 0.01/100
25	BK485	4x M10x45 ISO 4762-12.9	63 Nm ±15 %	S26-58475-0	S26-58475-5	
32	BK506	6x M10x45 ISO 4762-12.9	63 Nm ±15 %	S26-58508-0	S26-58508-5	

[1] Details see chapter 12, series SPP.

R4R UK.indd RH 17.04.2015

Proportional pressure reducing valves of the series VMY allow the variable adjustment of the reduced pressure from 0 bar up to the nominal pressure.

The valve consists of a spool type main stage and a proportionally operated pilot stage. The desired pressure can be variably set corresponding to the command signal specified on the amplifier. The proportional solenoid converts the current of the amplifier into force on the valve poppet of the pilot stage.

Typical applications are pressure systems, test equipment, or counterweight systems. The optimum performance can be achieved in combination with the digital amplifier module PCD00A-400 for open loop systems or with PWDXXA-40* for closed loop systems.

Function VMY*K06

With the proportional solenoids de-energized the main spring forces the main spool into the neutral position. Port A is connected to port T. Thus the reduced pressure only depends on the back pressure in the external drain pipe and/or the tank pressure and can accordingly be reduced down to 0 bar. The pressure present in the P line delivers the pilot oil to the pilot stage via a flow control valve.

When the proportional solenoid is energized, the pilot pressure is increased in the pilot pressure area, and the main spool moves against the spring until the connection P - A opens. The regulation of the reduced pressure on connection A takes place by the constant comparison of the actual pressure and the reference pressure of the pilot stage.

VMY*K06

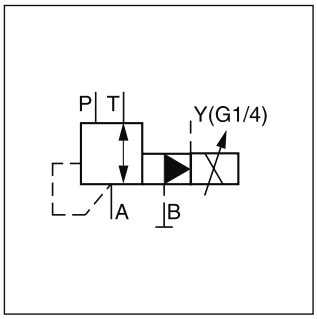

VMY*K06

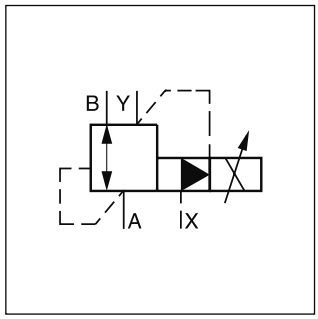

VMY*K10

VMY*K10

The valve spool is designed so that the connection B-A is open in the neutral position and is closed in the working position.

VMY*K06N

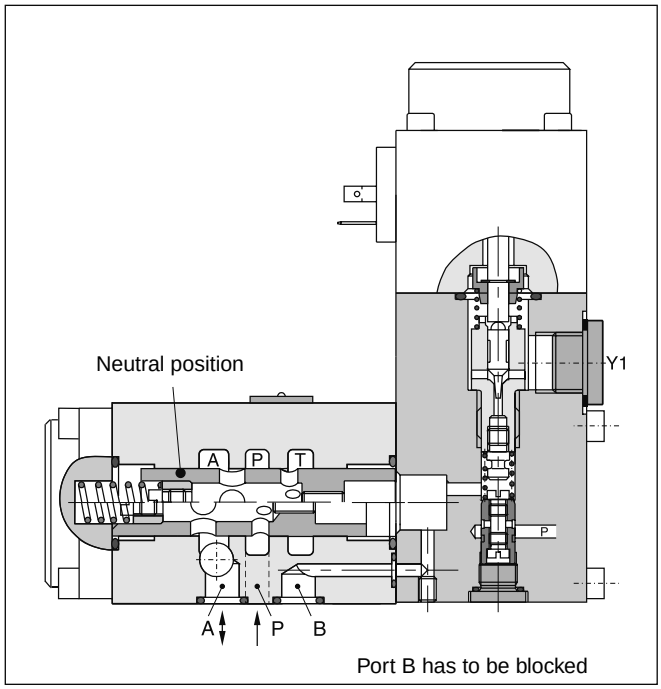

VMY*K10

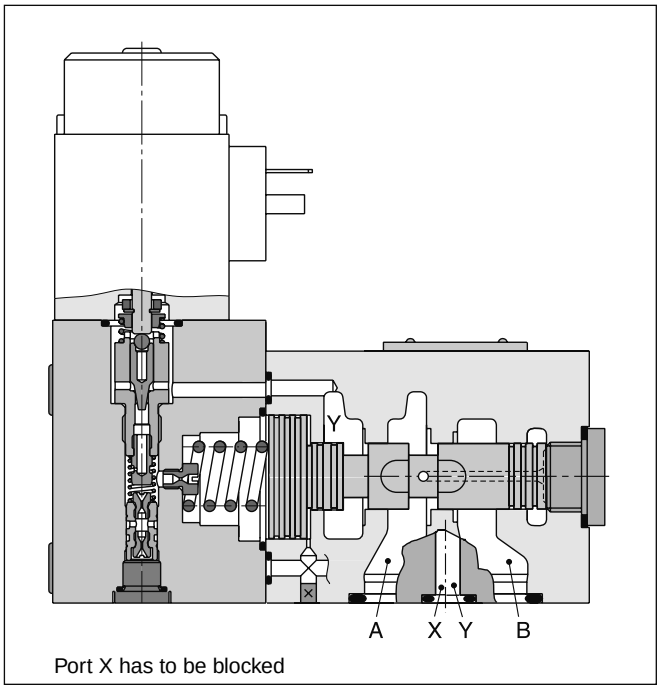

Ordering code

VMY	☐	K	☐	☐	☐	1	P
Reducing valve	Pressure stages	Proportional solenoid 9 V / 2.5 A	Nominal size	Pilot	Seals	Design series	High pressure channel

Code	Pressure stages
064	**up to 64 bar**
100	**up to 100 bar**
160	**up to 160 bar**
210	**up to 210 bar**
315	up to 315 bar

Code	Nominal size
06	**NG06**
10	**NG10**

Bold letters =
Short-term availability

Code	Seals
N [2]	**NBR**
V	FPM

Pilot oil				
Code	Size	Pilot	Drain	p_{min} [bar]
omit	**10**	**Internal**	**Internal**	**3 - 4**
N [1]	**06**	**Internal**	**External**	**0.5 - 1**
T	**06**	**Internal**	**Internal**	**1 - 2**

4

Technical data

General			
Design		3 way proportional reducing valve, pilot operated, spool design	
Nominal size		**06 (DIN NG06/CETOP 03/NFPA D03)**	**10 (DIN NG10/CETOP 05/NFPA D05)**
Interface		Subplate mounting according to ISO 5781	
Actuation		Proportional solenoid	
Mounting position		unrestricted	
Ambient temperature	[°C]	-20 ... +60	
$MTTF_D$ value	[years]	75	
Weight	[kg]	2.8	5
Hydraulics			
Max. operating pressure	[bar] [bar]	Size 06: Ports P, A 315; Port T, Y depressurized; port B has to be blocked Size 10: Ports A, B 350; Port Y depressurized; port X has to be blocked	
Pressure stages	[bar]	64, 100, 160, 210, 315	
Nominal flow	[l/min]	40	160
Fluid		Hydraulic oil according to DIN 51524	
Viscosity permitted recommended	[cSt] / [mm²/s] [cSt] / [mm²/s]	20 ... 400 30 ... 80	
Fluid temperature	[°C]	-20...+70 (NBR: -25...+70)	
Filtration		ISO 4406 (1999); 18/16/13	
Linearity	[%]	See characteristic pressure curves	±3.5 at > 15 % $p_{nom.}$
Repeatability	[%]	<±2	
Hysteresis	[%]	<3	
Response time	[ms]	<150	<200
Electrical			
Duty ratio	[%]	100 ED	
Protection class		IP65 in accordance with EN 60529 (with correctly mounted plug-in connector)	
Nominal voltage	[VDC]	9	
Max. current	[A]	2.7	
Nom. current	[A]	2.5	
Ambient temperature	[°C]	-20...+70	
Coil resistance	[Ohm]	-2.1 (at 20 °C)	
Solenoid connection		Connector as per EN 175301-803	
Power amplifier, recommended		PCD00A-400	

[1] Connection on port Y1 or Y2.
[2] Not for NG06.

VMY UK.INDD RH 17.04.2015

NG06 Characteristic pressure lines p = f (U_{set})

Setting range max. 64 bar

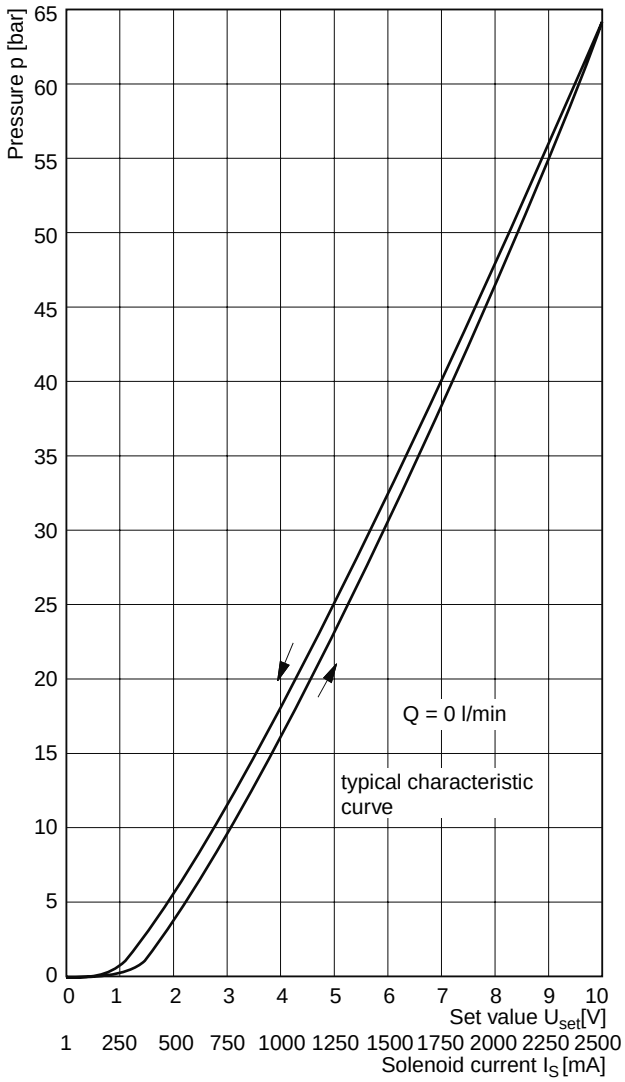

Setting range max. 210 bar

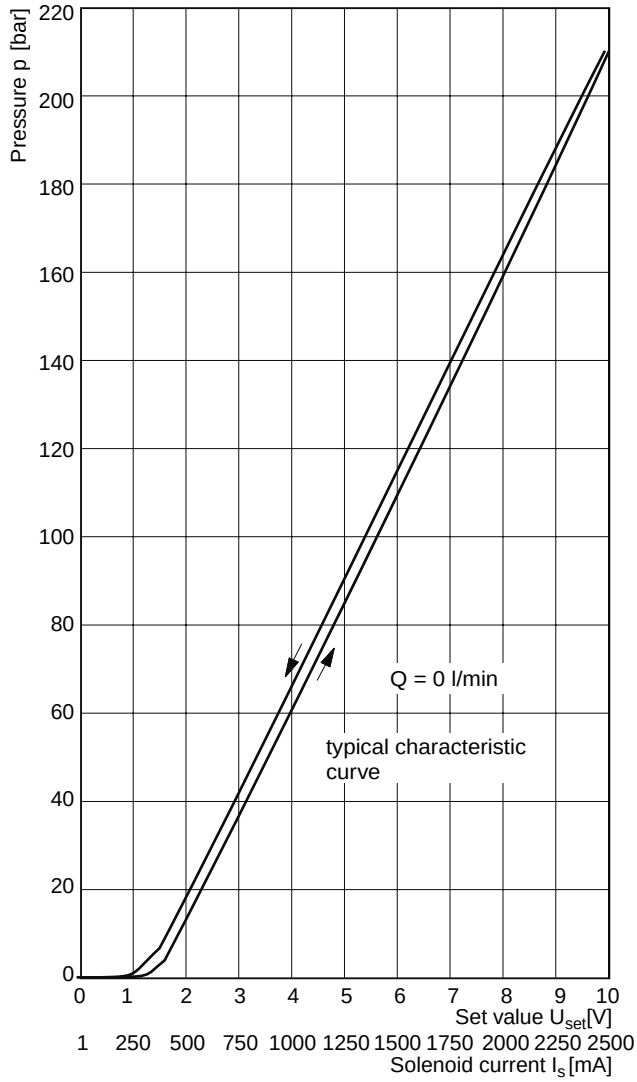

NG06 p/Q characteristics

Setting range max. 64 bar

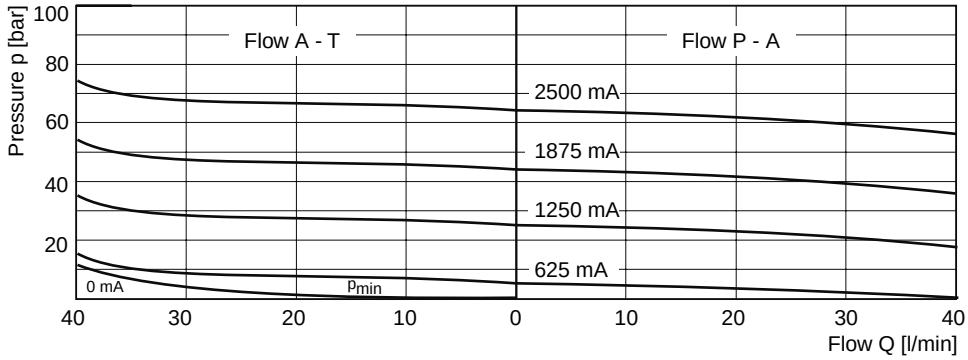

All characteristic curves measured with HLP46 at 50 °C.

VMY UK.INDD RH 17.04.2015

4

NG06 p/Q characteristics

Setting range max. 100 bar

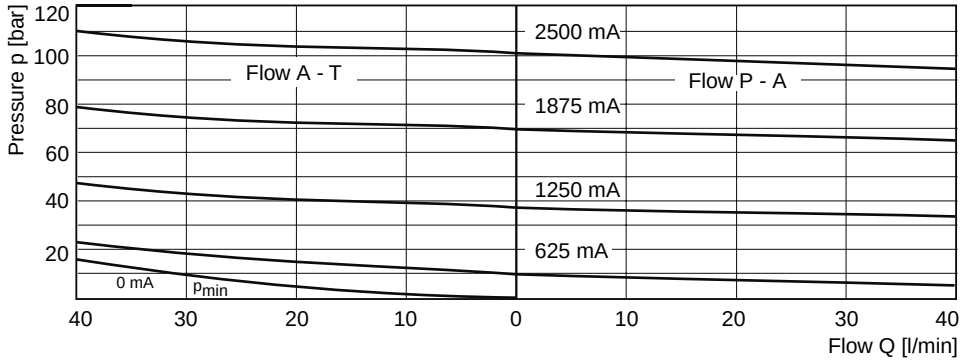

Setting range max. 160 bar

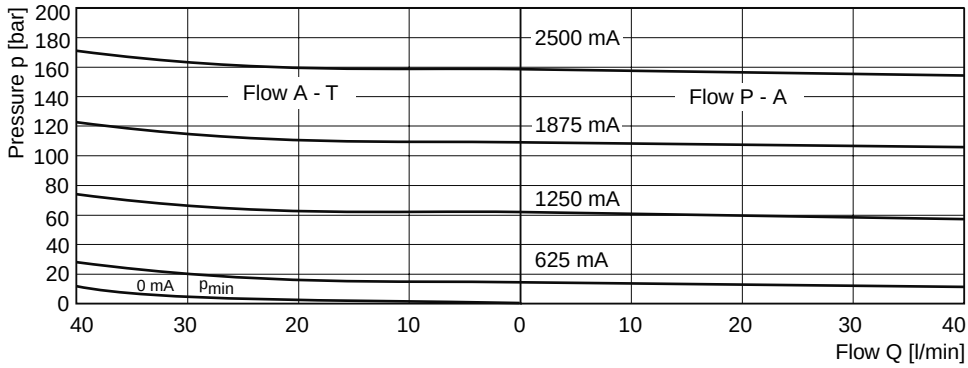

Setting range max. 210 bar

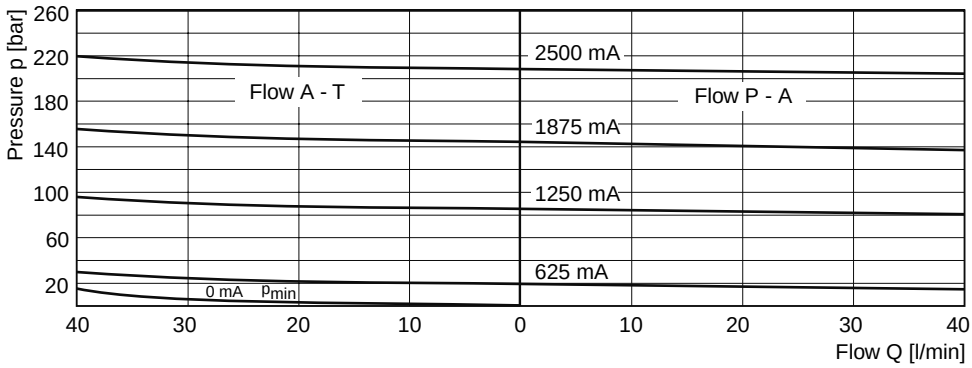

Setting range max. 315 bar

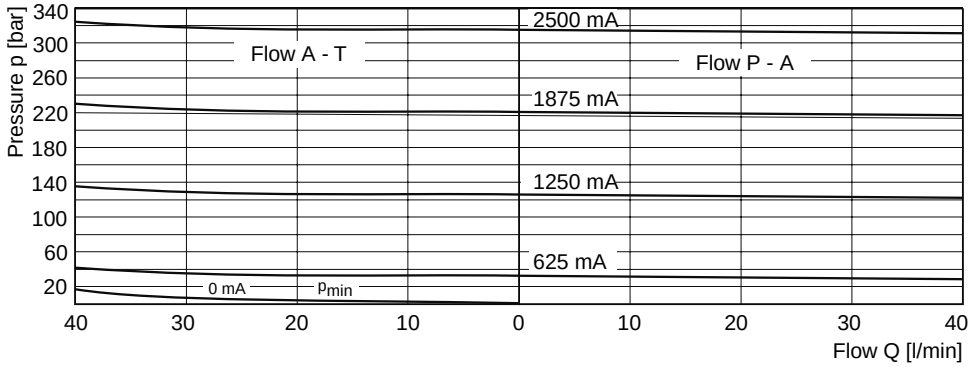

All characteristic curves measured with HLP46 at 50 °C.

VMY UK.INDD RH 17.04.2015

Step response

Typical curve

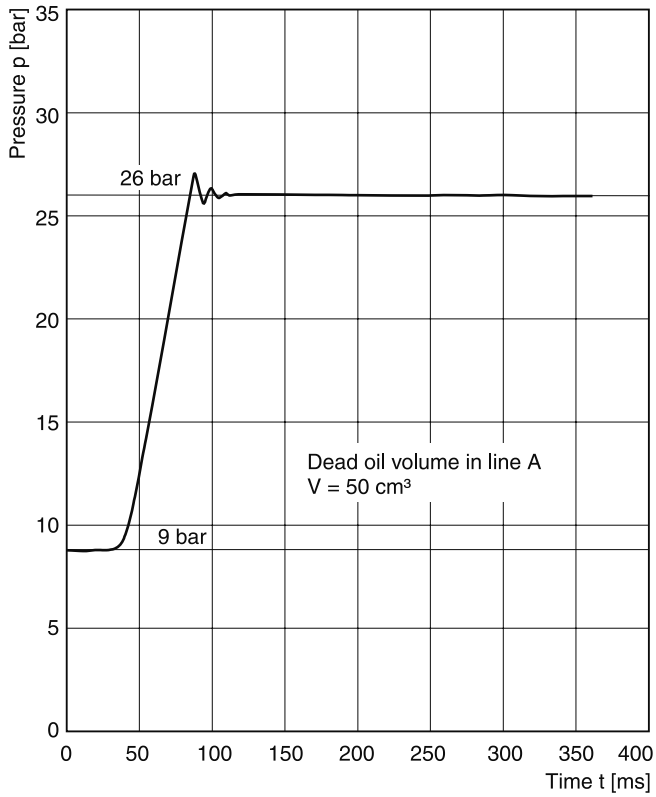

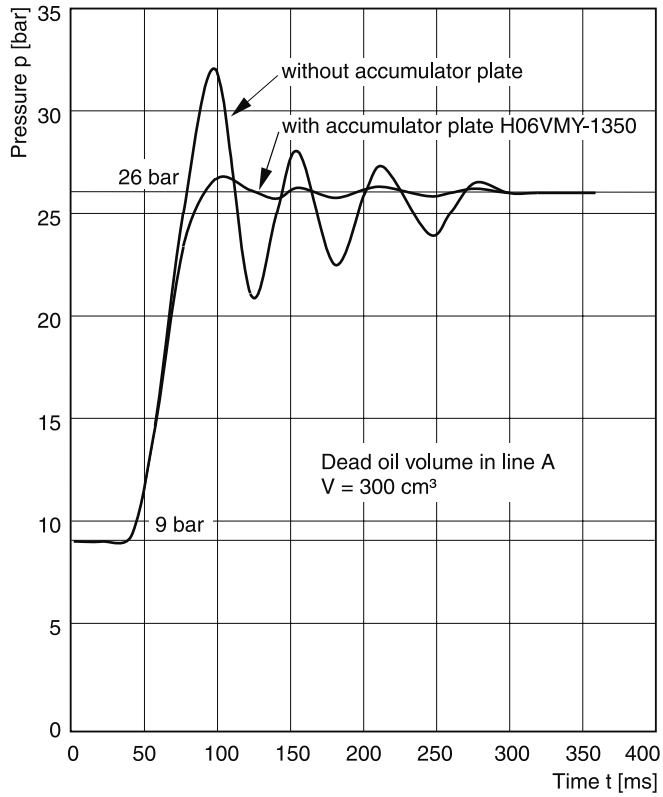

All characteristic curves measured with HLP46 at 50 °C.

Accumulator plate H06VMY-1350

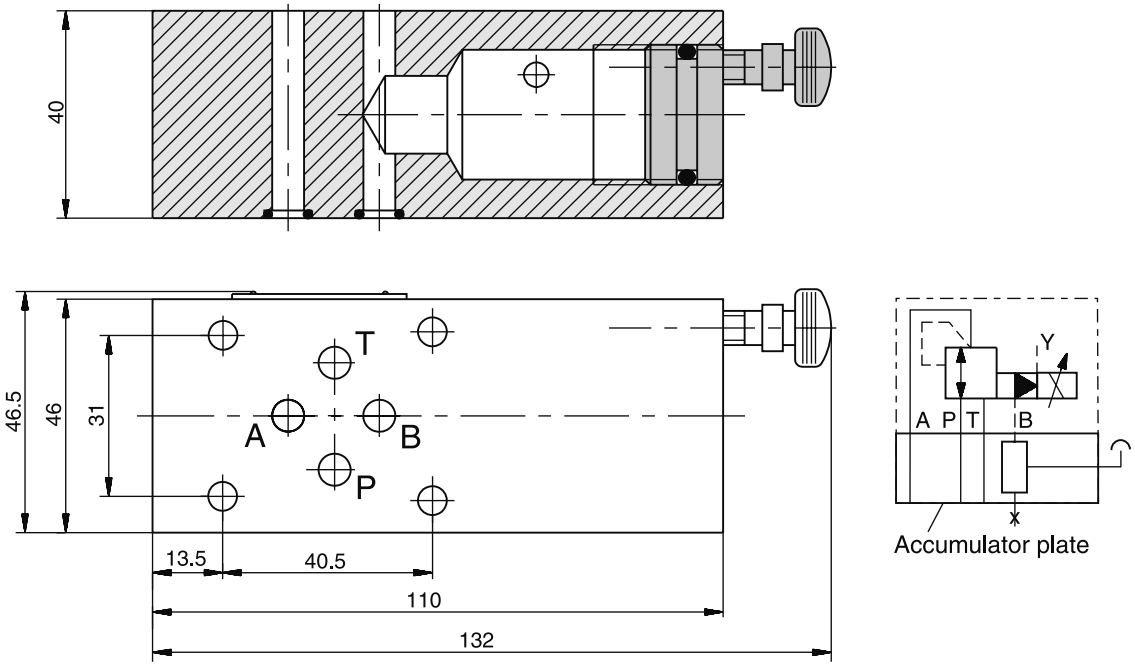

NG10 p/Q characteristics
for pilot oil supply from high pressure channel P

Setting range max. 64 bar

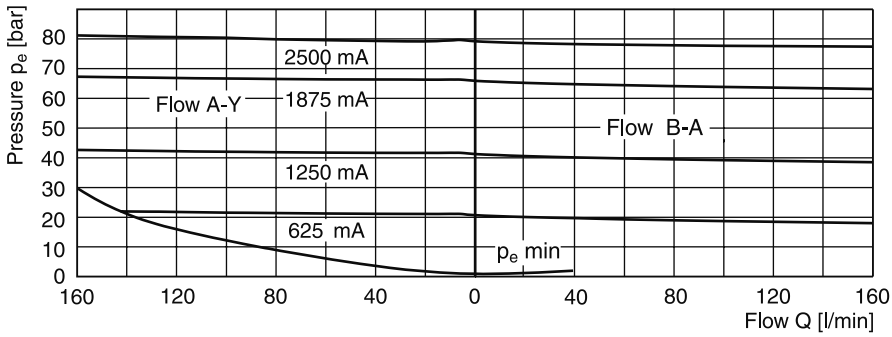

Setting range max. 100 bar

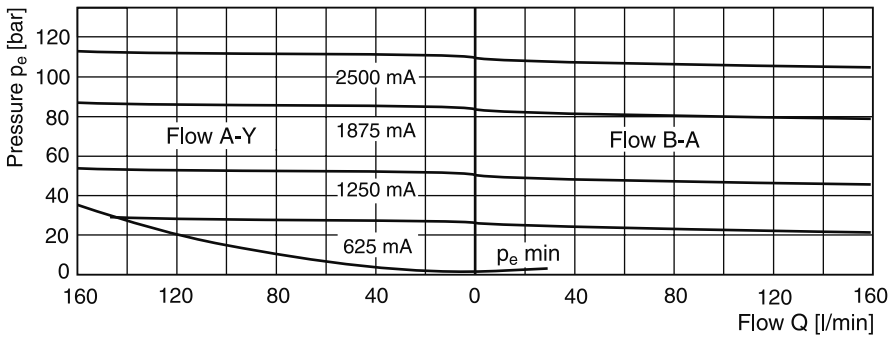

Setting range max. 160 bar

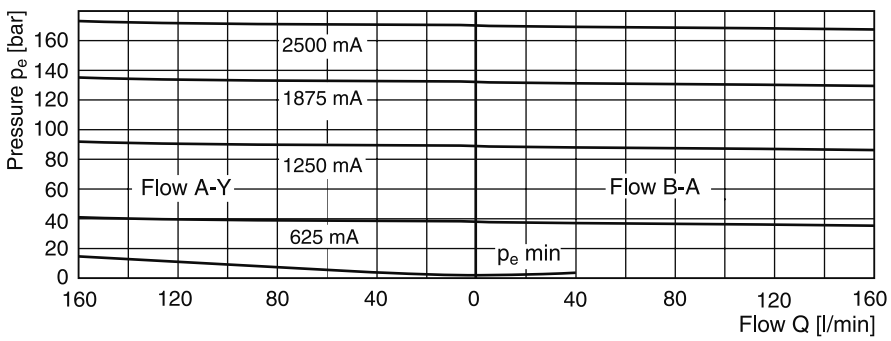

Setting range max. 210 bar

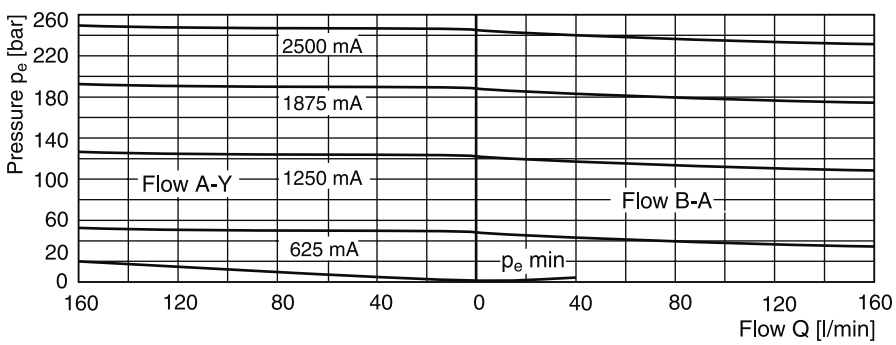

All characteristic curves measured with HLP46 at 50 °C.

VMY UK.INDD RH 17.04.2015

NG06

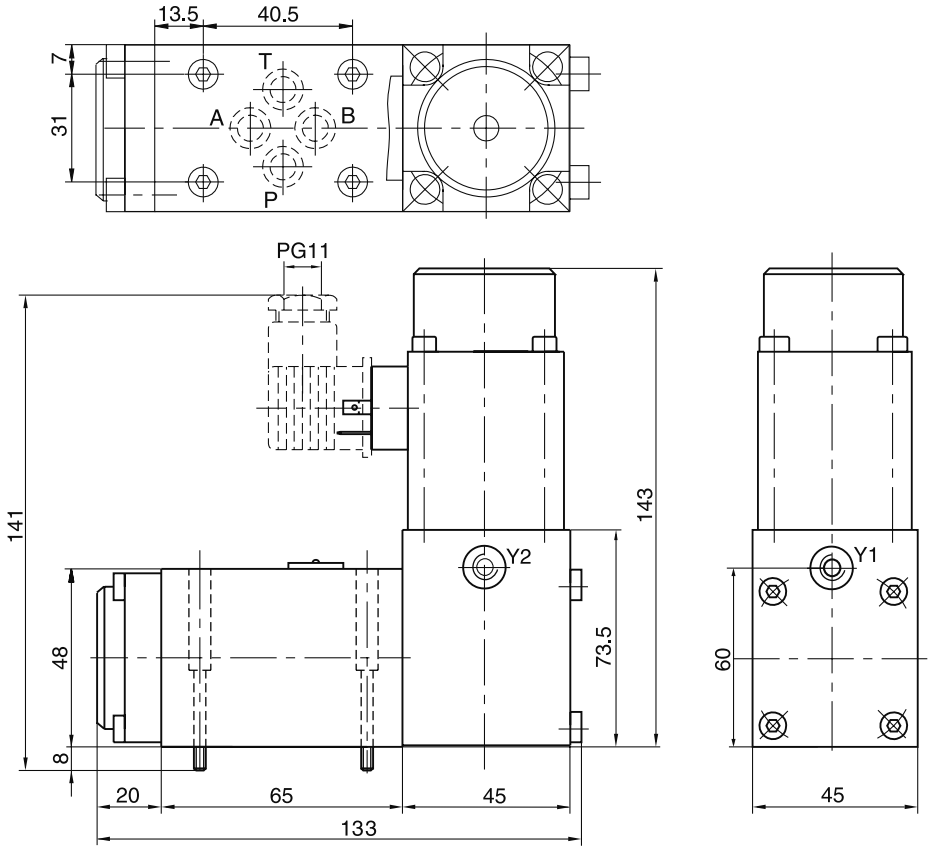

Port Y: G1/4

VMY*K06T:
Ports Y1 and Y2: closed

VMY*K06N:
Drain port Y1 or Y2
Port Y1 closed,
Port Y2 opened

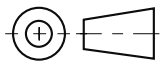

Surface finish	Bolt kit			Kit FPM
R_{max}6.3 ▱ 0.01/100	BK375	4x M5x30 ISO 4762-12.9	7.6 Nm ±15 %	SK-VMY-L06-V

Mounting pattern ISO 5781-03-04-0-00

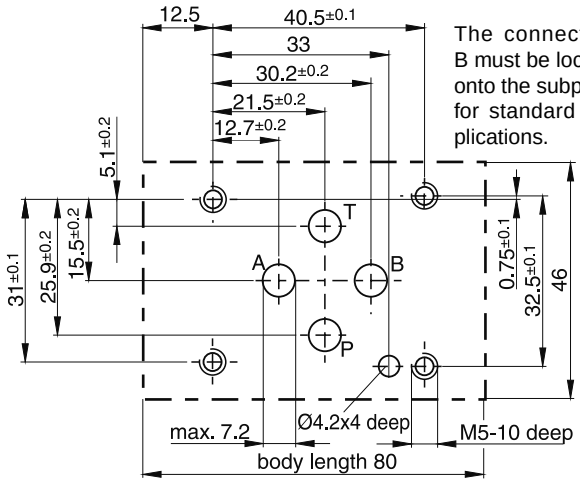

The connection B must be locked onto the subplate for standard applications.

4

NG10

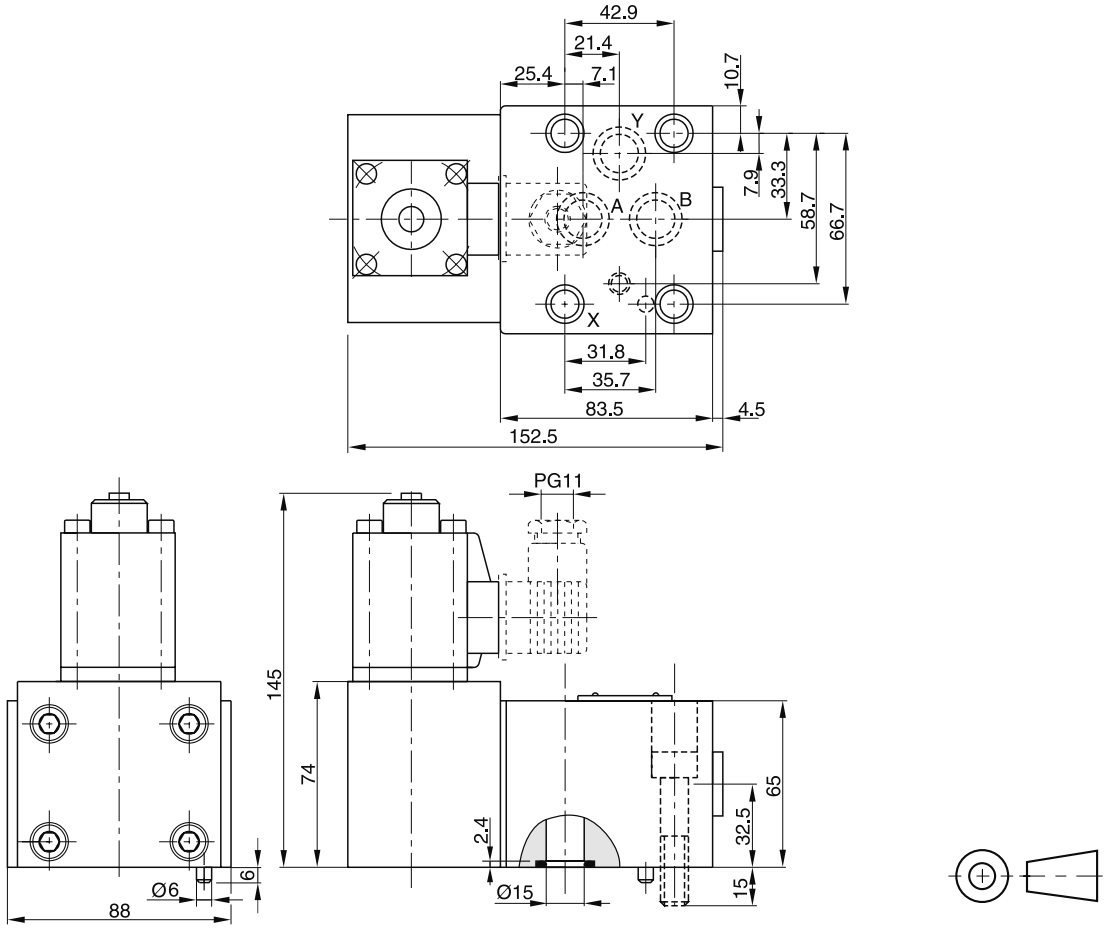

Surface finish	Bolt kit			Kit FPM
R_{max}6.3 ▱ 0.01/100	BK389	4x M10x50 ISO 4762-12.9	63 Nm ±15 %	SK-VB/VM-A10V

Mounting pattern ISO 5781-06-07-0-00 [1)]

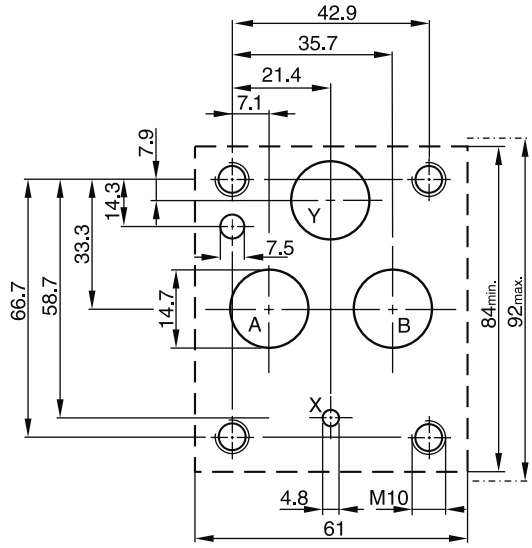

[1)] Deviating from ISO the Y port has Ø 14.7 instead of Ø 4.8.

VMY UK.INDD RH 17.04.2015

Subplate mounted proportional pressure reducing valves series R4R have a proportional solenoid operated pilot stage and a cartridge main stage.

The optimum performance can be achieved in combination with the digital amplifier module PCD00A-400.

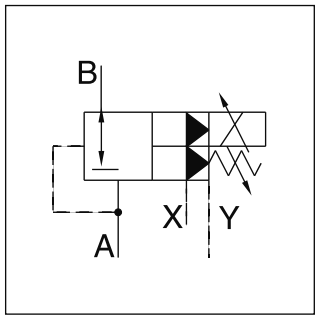

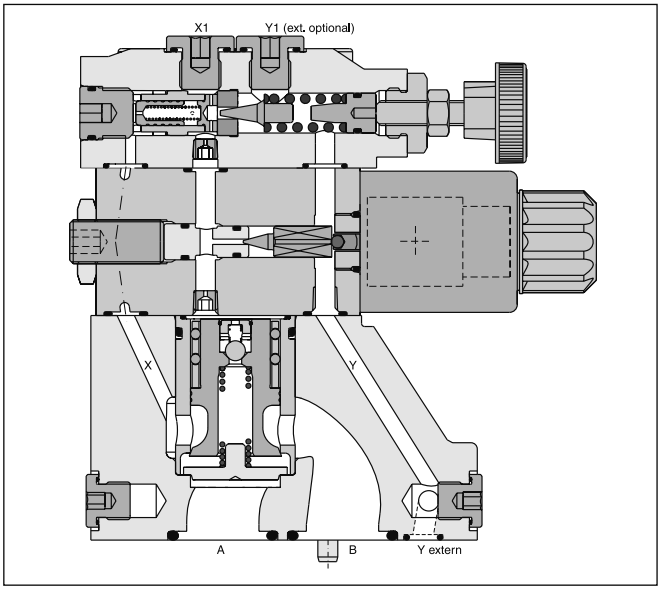

Features

- Pilot operated with proportional solenoid
- Continuous adjustment by proportional solenoid
- Subplate mounting according to ISO 5781
- 3 pressure stages
- With mechanical maximum pressure adjustment

Ordering code

R	4	R		–	5	9				P2	G0R	B		
Pressure valve	Interface	Reducing function	Nominal size		Max. pressure 350 bar	Pilot ports G1/4“	Pressure stages	Adjustment	Pilot oil	Prop. operation	Solenoid voltage 12 V, 2.3 A	Design series	Seal	Modifi-cations

Code	Interface	
4	Subplate mounting ISO 5781	NG10 and 25 / NG32 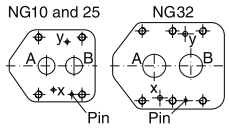

Code	Nominal size
03	NG10
06	NG25
10	NG32

Code	Pressure stages
1	up to 105 bar
3	up to 210 bar
5	up to 350 bar

Code	Seals
1	NBR
5	FPM

Pilot oil		
Code	Pilot	Drain
1	Internal	External from Y
2	Internal	External from Y1

Code	Adjustment
1	Hand knob 32 mm diameter (standard)
3	Acorn nut with lead seal

R4R PROP UK.indd RH 17.04.2015

4

Technical data

General				
Nominal size		**NG10**	**NG25**	**NG32**
Interface		Subplate mounting acc. ISO 5781		
Mounting position		Unrestricted, horizontal mounting preferred		
Ambient temperature	[°C]	-20...+60		
$MTTF_D$ value	[years]	75		
Weight	[kg]	2.7	4.5	6.0
Hydraulic				
Max. operating pressure	[bar]	Ports A, B and X 350, port Y depressurized		
Pressure stages	[bar]	105, 250, 350		
Nominal flow	[l/min]	150	350	500
Fluid		Hydraulic oil according to DIN 51524		
Viscosity, permitted recommended	[cSt] / [mm²/s] [cSt] / [mm²/s]	20 ... 400 30 ... 80		
Fluid temperature	[°C]	-20...+70 (NBR: -25...+70)		
Filtration		ISO 4406 (1999); 18/16/13		
Electrical				
Duty ratio	[%]	100 ED		
Protection class		IP65 in accordance with EN 60529 (with correctly mounted plug-in connector)		
Nominal voltage	[V]	12		
Max. current	[A]	2.3		
Coil resistance	[Ohm]	4 at 20 °C		
Solenoid connection		Connector as per EN 175301-803		
Power amplifier, recommended		PCD00A-400		

Command/pressure curves

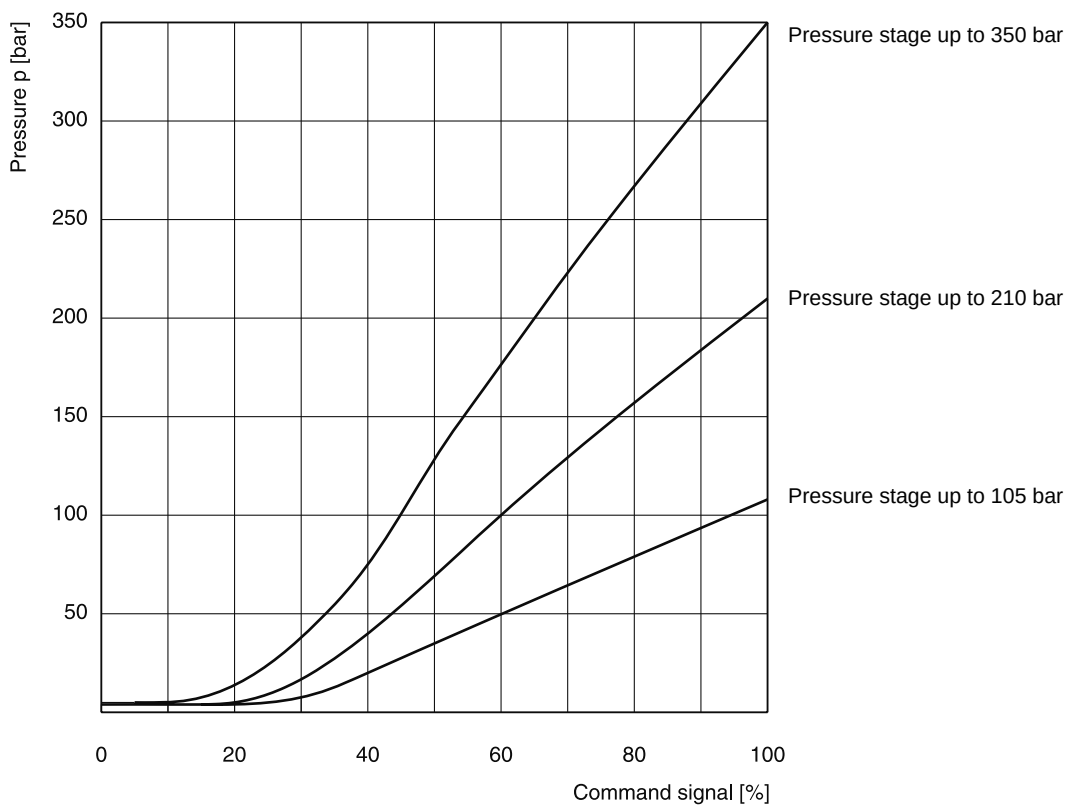

All characteristic curves measured with HLP46 at 50 °C.

Reduced pressure pA versus flow Q
R4R03 [1)]

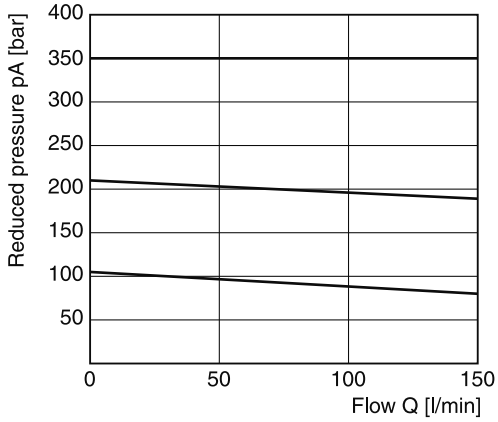

Minimum pressure curve

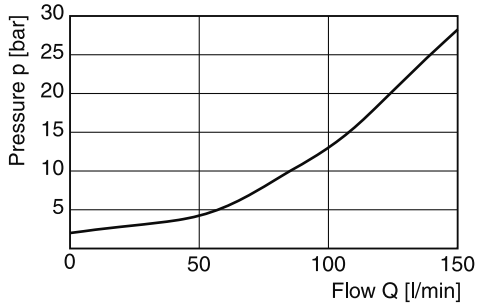

Reduced pressure pA versus flow Q
R4R06 [1)]

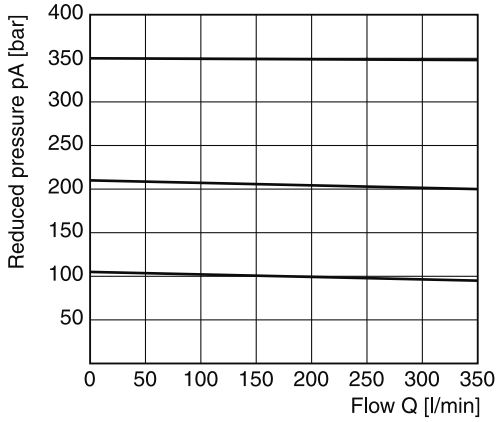

Minimum pressure curve

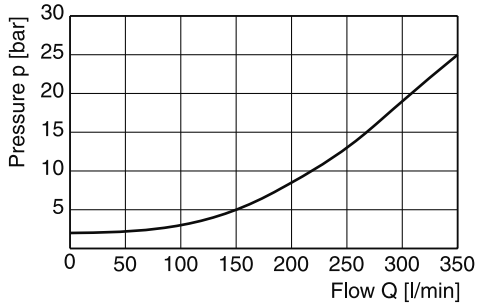

Reduced pressure pA versus flow Q
R4R10 [1)]

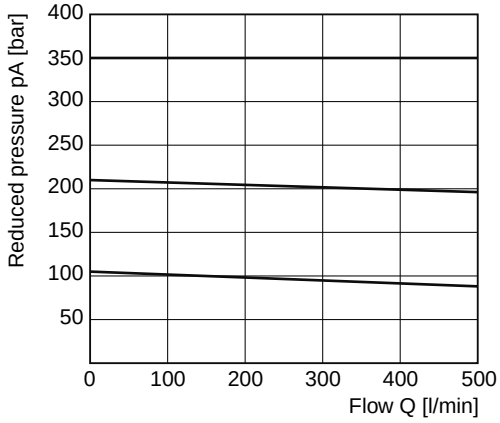

Minimum pressure curve

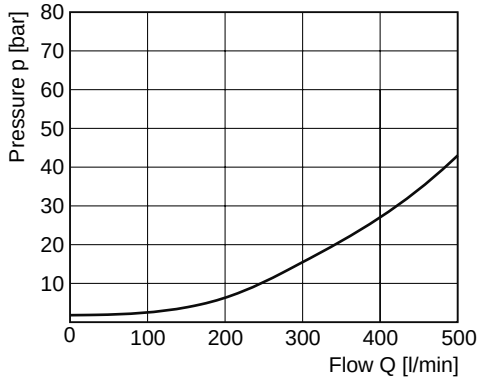

All characteristic curves measured with HLP46 at 50 °C.

[1)] Measured at 350 bar primary pressure pB.

R4R PROP UK.indd RH 17.04.2015

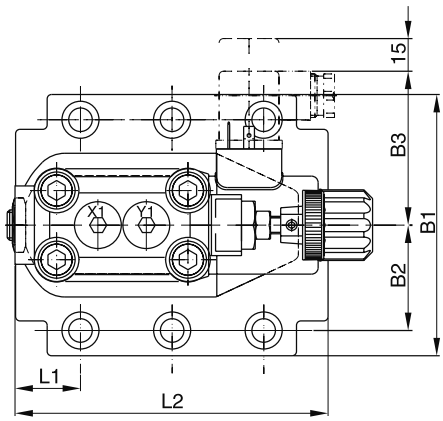

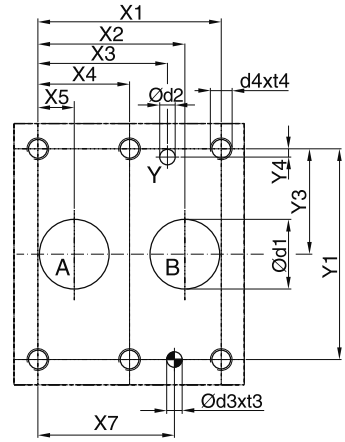

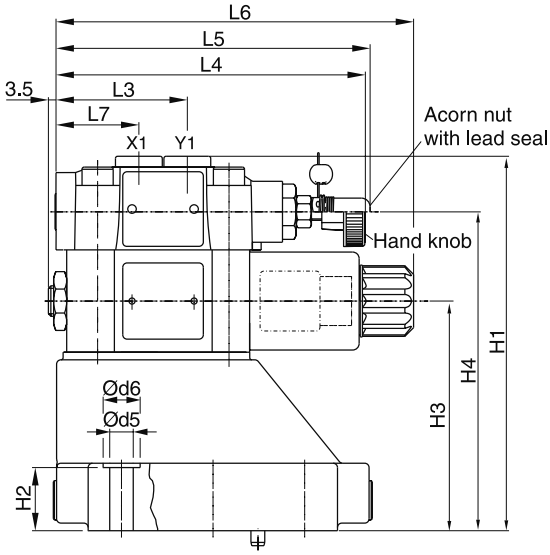

X1: G 1/4“
Y1: G 1/4“

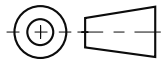

NG	ISO-code	x1	x2	x3	x4	x5	x6	x7	y1	y2	y3	y4	y5	y6
10	5781-06-07-0-00	42.9	35.8	21.5	–	7.2	–	31.8	66.7	–	33.4	7.9	–	–
25	5781-08-10-0-00	60.3	49.2	39.7	–	11.1	–	44.5	79.4	–	39.7	6.4	–	–
32	5781-10-13-0-00	84.2	67.5	59.5	42.1	16.7	–	62.7	96.8	–	48.4	3.8	–	–

Tolerance for all dimensions ±0.2

NG	ISO-code	B1	B2	B3	H1	H2	H3	H4	L1	L2	L3	L4	L5	L6	L7
10	5781-06-07-0-00	87.3	33.35	71	134	21	68.5	109.5	25	90.8	60.8	143	144.8	164.8	38.6
25	5781-08-10-0-00	105	39.7	71	158.5	29	93	134	30.9	123	60.8	143	144.8	164.8	38.6
32	5781-10-13-0-00	120	48.4	71	171	30	105.5	146.5	29.8	143.5	60.8	143	144.8	164.8	38.6

NG	ISO-code	d1max	d2max	d3	t3	d4	t4	d5	d6	Subplate [1]
10	5781-06-07-0-00	15	7	7.1	8	M10	16	10.8	17	SPP 3M6B 910
25	5781-08-10-0-00	23.4	7.1	7.1	8	M10	18	10.8	17	SPP 6M8B 910
32	5781-10-13-0-00	32	7.1	7.1	8	M10	20	10.8	17	SPP 10M12B 910

NG	Bolt kit			Kit NBR	Kit FPM	Surface finish
10	BK505	4x M10x35 ISO 4762-12.9	63 Nm ±15 %	S26-58507-0 [2]	S26-58507-5 [2]	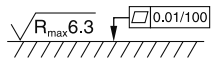
25	BK485	4x M10x45 ISO 4762-12.9	63 Nm ±15 %	S26-58475-0 [2]	S26-58475-5 [2]	
32	BK506	6x M10x45 ISO 4762-12.9	63 Nm ±15 %	S26-58508-0 [2]	S26-58508-5 [2]	
Prop. section P2				S26-58473-0	S26-58473-5	

[1] Details see chapter 12, series SPP.
[2] Please combine seal kit of one size with seal kit of Prop. section P2 for complete seal kit.

R4R PROP UK.indd RH 17.04.2015

Description	Threaded cable joint	Body colour coding	Figures switching	Order no.
Plug EN 175301-803[1], design type AF, protection class IP65 voltages up to 250 V	PG 9	black, B grey, A	Fig. 1	**5001710** **5001711**
	PG11	black, B grey, A	Fig. 1	**5001716** **5001717**
Plug with LED insert 24 V	PG11	black, B grey, A	Fig.1 and Fig. 3	**5001571** **5001572**
Plug with lamp insert 110 V	PG11	black, B grey, A	Fig.1 and Fig. 4	**5001573** **5001574**
Plug with lamp insert 230 V	PG11	black, B grey, A	Fig.1 and Fig. 4	**5001575** **5001576**
Plug with LED insert 24 V and supressing circuitry	PG11	black, B grey, A	Fig.1 and Fig. 5	**5001708** **5001709**
Plug with rectifier. Rectifier with 4 silicon diodes in bridge circuit. Varistor in alternating current side to protect the diodes against power peaks	PG11	black, B grey, A	Fig.1 and Fig. 6	**5001737** **5001738**
Plug with pull relief and translucent cover	PG11	black, B grey, A	Fig. 2	**5001723** **5001724**
Application with bridge rectifier suitable for 5001723 and 5001724	—	—	Fig. 2 and Fig. 7	**5001727**
Application with bridge rectifier and lamp suitable for 5001723 and 5001724	—	—	Fig. 2 and Fig. 8	**5001734**

Fig. 1

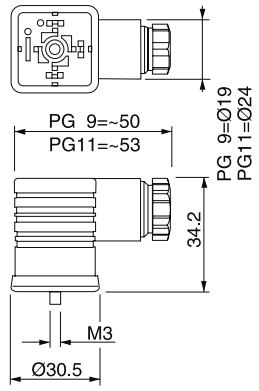

Fig. 3

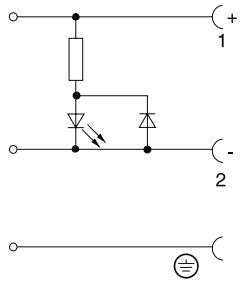

Fig. 5

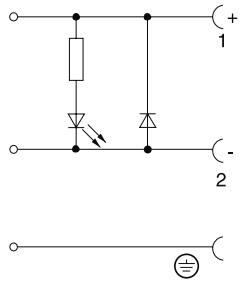

Fig. 7

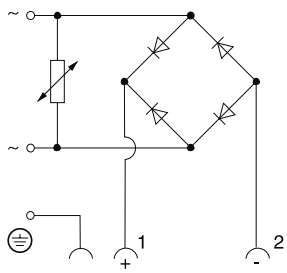

Fig. 2

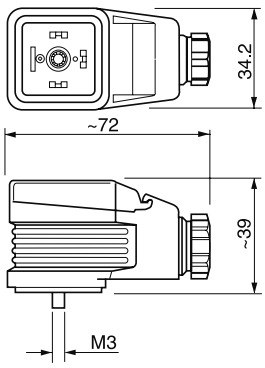

Fig. 4

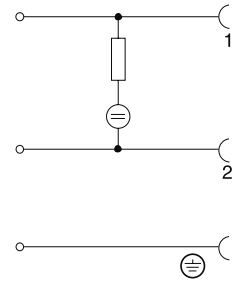

Fig. 6

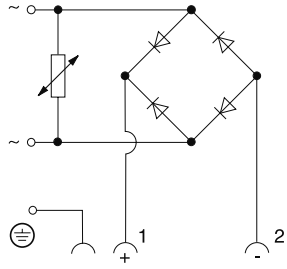

Fig. 8

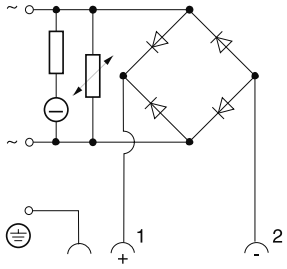

Input voltage
max. 240 V~
Output voltage
max. 213 V=

[1] EN 175301-803 (new) corresponding with DIN 43650 (old).

Access04.indd RH 17.04.2015

Central connector

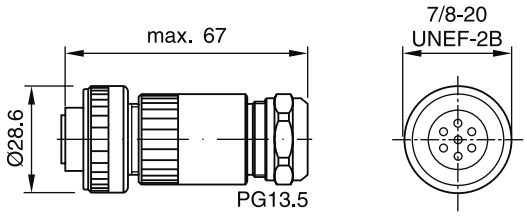

Description	Order No.
DIN 43563 6+PE	5004072

Series	Description	Size								Mounting		Page
	Parker Standard DIN / ISO	1/4	3/8	1/2	3/4	1	06	10	16	Subplate	Screw-in	
	Throttle valves, manual adjustment											
MVI		•	•	•	•						•	5-2
NS		•	•	•	•	•				•		5-4
FS	With free return flow	•	•	•	•	•				•		5-6
	Flow control valves, manual adjustment											
PC*MS		•	•	•	•	•				•		5-8
GFG2							•			•		5-10
2F1C								•	•	•		5-14
	Flow control valves, proportional adjustment											
DUR*L							•			•		5-20

5

More flow valves are presented in the following chapters:
Chapter 7: Sandwich Valves
Chapter 8: Slip-In Cartridge Valves
Chapter 9: SAE Flange Valves
Chapter 10: Valves for Pipe Mounting

Manatrol needle valve with steel body as screw-in valve for block insertion, optionally with a 30° taper fine V-notch or micro-fine rectangular slot. The form of the metering opening influences the accuracy of the flow adjustment, which is pressure and viscosity dependent. The needle is made of stainless steel and fits into a ring gap in the valve cartridge. For details of cutting tools for reaming the block bore, see 'Accessories' at the end of this chapter.

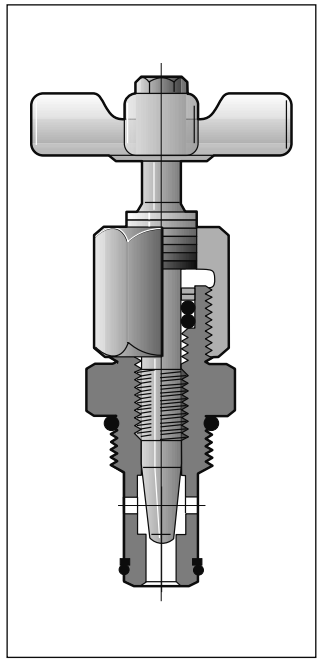

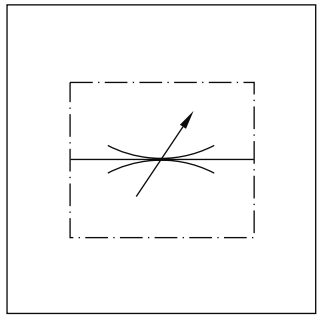

Characteristic values

Size	Operating press. [bar]	Flow [l/min] Δp 10 bar	Max. orifice area [cm²]	Kv factor valve	Weight [kg]
400	350	25	0.14	6.3	0.18
600	350	65	0.37	18.5	0.32
800	350	105	0.55	27.5	0.59
1200	350	160	0.90	45.7	0.95
Needle size					
400-2		11	0.52		
400-3		2	0.012		

5

$$\text{Flow rate } Q\ [\text{l/min}] = Kv \cdot \sqrt{\frac{\Delta p}{\gamma}}$$

Kv	see table
Δp [bar]	
γ [kg/dm³]	= specific gravity of fluid
(γ for mineral oil	= 0.85 – 0.9)

Δp/Q curves

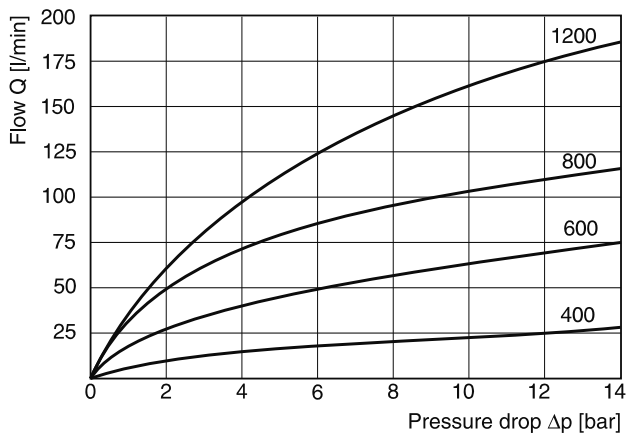

All characteristic curves measured with HLP46 at 50 °C.

Ordering code

MVI | [ ] | **S** | [ ] | [ ]

Cartridge-type needle valve — **Size and screw-in threads** — **Steel body** — **Needle** — **Seal**

Code	Size	Threads
400	**1/4"**	**3/4 - 16 UNF-2B**
600	**3/8"**	**7/8 -14 UNF-2B**
800	**1/2"**	**1 1/16 - 12 UN-2B**
1200	**3/4"**	**1 5/16 - 12 UN-2B**

Code	Seal
omit	**NBR**
V	FPM

Code	Needle
omit	**Standard 30° taper**
2 [1]	Fine V-notch
3 [1]	Micro-fine slotted

Bold letters =
Short-term availability

[1] Only for size 400.

MVI UK.indd RH 17.04.2015

Threaded cartridge valve

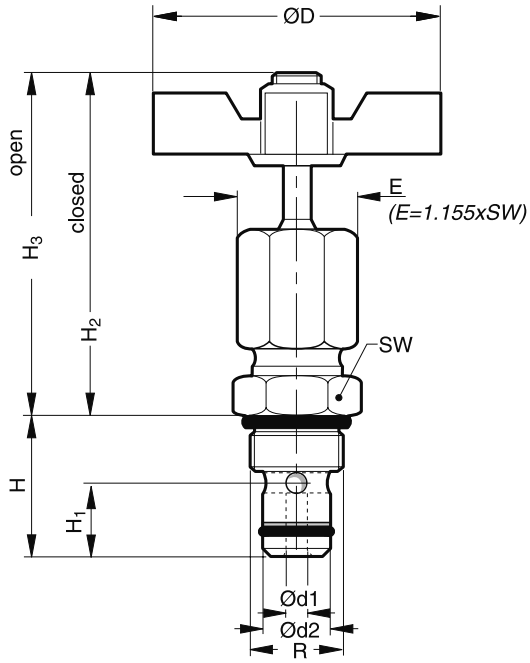

Size	H	H3	H2	H1	Ød1	Ød2	R (Threads)	ØD	SW
MVI 400	25.4	65	60	10.9	4.6	14.22	3/4 - 16 UNF-2	51	22.1
MVI 600	30	81	73	13.5	7.9	15.8	7/8 - 14 UNF-2	64	25.4
MVI 800	39.6	91	79	15.2	9.4	20.55	1 1/16 - 12 UN-2	83	31.8
MVI 1200	43.4	102	88	19.1	11.7	26.92	1 5/16 - 12 UN-2	98	38.1

Mounting cavity

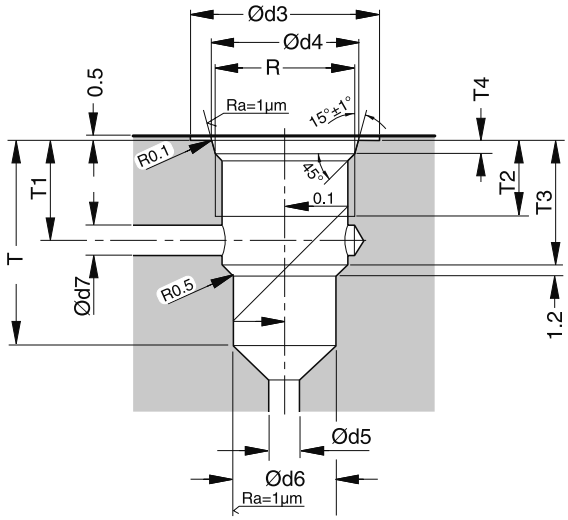

Size	Ød3	Ød4+ 0.12	Ød5 (min)	Ød6+ 0.05	Ød7	T4+ 0.38	T2	T3	T	T1
MVI 400	26	20.6	5.3	14.275	5.3	2.54	15	17.8	27	14.2
MVI 600	30	23.93	8.1	15.85	8.1	2.54	17	21.6	32	16.5
MVI 800	37	29.16	10.2	20.6	10.2	3.3	19	30	42	24.1
MVI 1200	44	35.54	12.7	26.975	12.7	3.3	19	31.8	46	24.6

Cutting tools for MVI valves

Material	Valve sizes and ordering code		
	400	600	800 and 1200
Cutting alloy	SE 1062	SE 567	on request
Steel	SE 1063	SE 1061	

MVI UK.indd RH 17.04.2015

Manatrol shut-off and metering valves with 2 stage needle cone. Fine adjustment for the first stage can be achieved with 3 rotations of the adjustment knob. The second stage with normal throttle characteristics is achieved with 3 further rotations.

A cylindrical needle with a rectangular slot is provided to reduce the viscosity effect for sizes 400 and 600. The flow is dependent on pressure and viscosity.

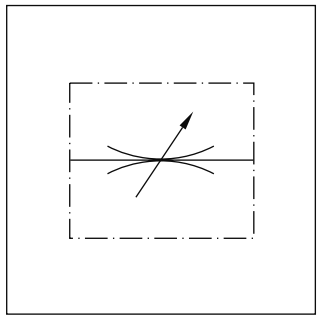

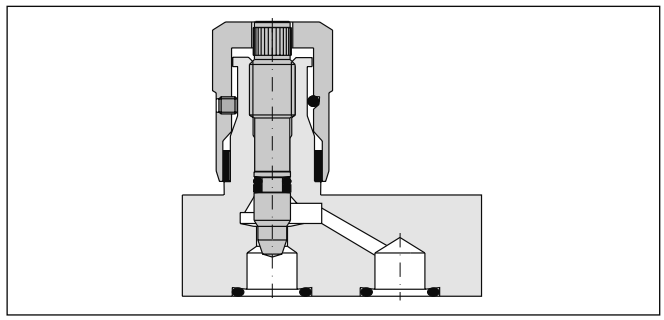

Characteristic values

(only for standard 2 stage needle)

Size	Press. [bar] steel	Press. [bar] brass	Flow [l/min] Δp 10 bar	Max. cross-section [cm²]	Kv factor valve open	Weight [kg]
400	210	140	25	0.13	6.3	0.4
600	210	140	40	0.22	11.2	0.6
800	210	140	50	0.28	13.9	1.0
1200	210	140	120	0.70	35.4	2.0
1600	210	35	250	1.48	75	4.0

$$\text{Flow rate } Q\ [l/min] = Kv \cdot \sqrt{\frac{\Delta p}{\gamma}}$$

Kv from the table
Δp [bar]
γ [kg/dm³] = specific weight of the medium
(γ for mineral oil = 0.85 – 0.9)

Ordering code

N	S		S			
Needle valve	Subplate mounting	Size	Steel body	Needle	Clamping screw	Seal

Code	Size
400	**400**
600	**600**
800	**800**
1200	**1200**
1600	1600

Code	Needle
omit	**Standard 2 stage needle**
4 [1)]	Micro-fine hollow needle with slot

Code	Seal
omit	**NBR**
V	FPM

Code	Clamping screw
omit	**Hexagon socket**
F	With knurled knob

Bold letters =
Short-term availability

[1)] Only for sizes 400 to 600.

NS UK.indd RH 17.04.2015

Δp/Q curves

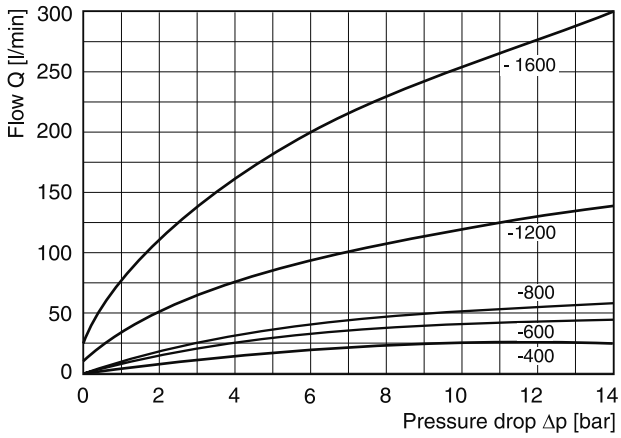

All characteristic curves measured with HLP46 at 50 °C.

Dimensions

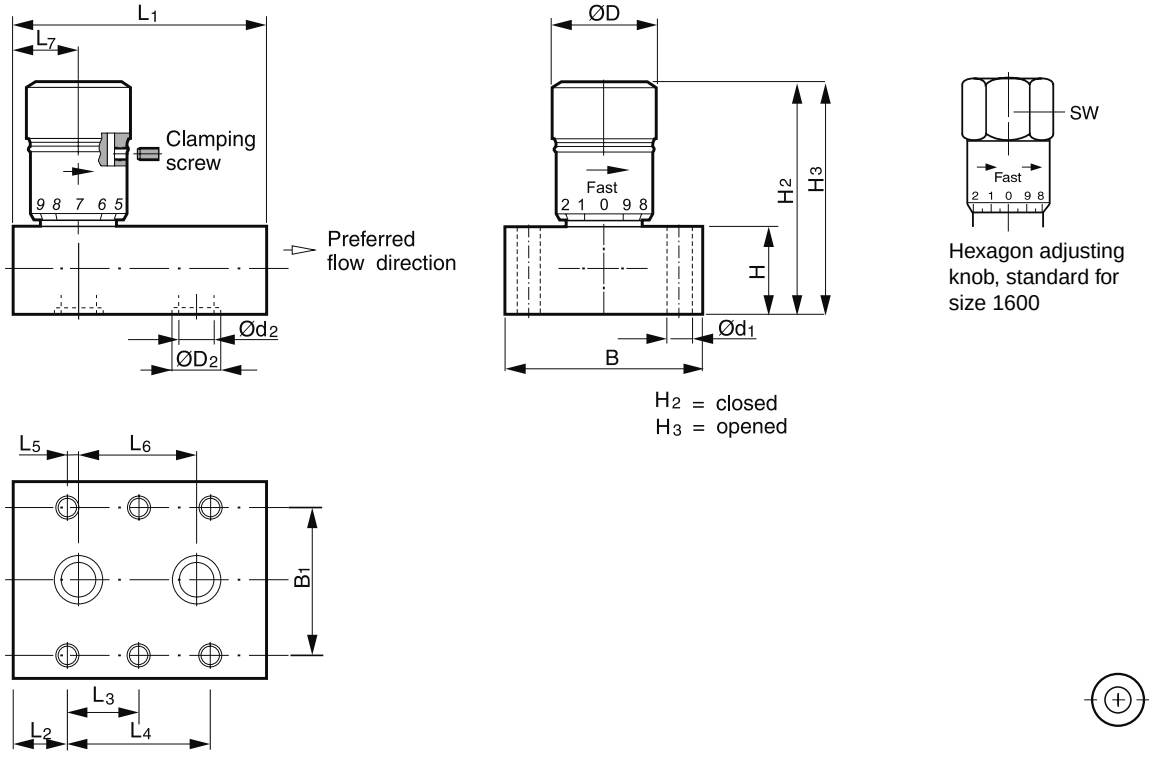

Size	L1	L2	L3	L4	L5	L6	L7	B	B1	H	H2	H3	Ød1	Ød2	ØD2	ØD	SW
NS400	47.8	6.4	–	34.7	4.8	25.4	11.2	44.5	33.3	22.4	49.5	54.6	6.8	7.1	13.3	20.6	–
NS600	50.8	8.6	–	33.6	4.1	25.4	12.7	50.8	38.1	25.4	61.0	67.3	7.0	8.6	16.0	25.4	–
NS800	75.4	18.5	–	38.1	4.1	30.2	22.6	57.2	44.4	25.4	70.0	77.2	7.0	11.9	19.1	30.0	–
NS1200	93.7	8.6	38.1	76.2	11.2	54.4	19.8	69.9	54.1	28.4	79.3	94.5	9.5	16.8	24	34.8	–
NS1600	111.3	7.9	47.8	92.2	19.0	57.2	26.9	76.2	60.4	44.5	123.2	140.0	9.5	22.4	32	–	47.5

Manatrol throttle check valves series FS allow the adjustment of the flow for a defined direction.

A 2 stage needle allows for very exact setting of smaller flow rates with the first 3 rotations of the adjustment knob. After 3 more rotations, the valve is completely open. The valve setting can be locked by a locking screw.

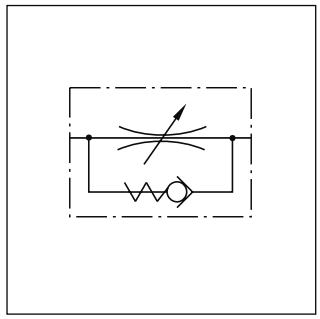

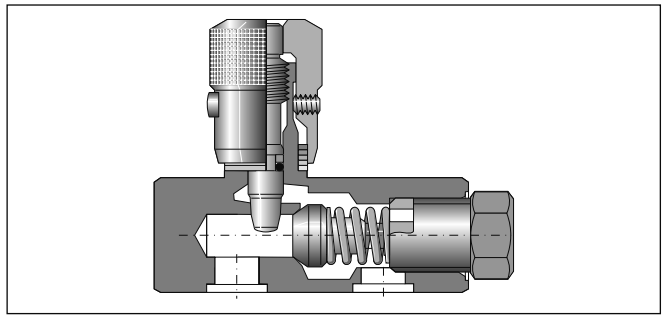

$$\text{Flow rate } Q\ [l/min] = Kv \cdot \sqrt{\frac{\Delta p}{\gamma}}$$

Kv	from the table
Δp [bar]	
γ [kg/dm³]	= specific gravity of fluid
(γ for mineral oil	= 0.85 – 0.9)

5

Characteristic values

Size	Pressure [bar]	Max. flow [l/min Δp10 bar]	Opening [cm²]	Check Kv factor	Throttle surface [cm²]	Throttle v. open Kv factor	Weight [kg]
400 [1)]	210	25	0.37	18.6	0.13	6.3	0.23
600 [1)]	210	40	0.62	30.4	0.22	11.2	0.31
800 [1)]	210	50	0.86	43.4	0.28	14	0.67
1200 [1)]	210	120	1.18	60	0.70	35.4	1.17
1600 [1)]	210	250	2.23	111	1.48	75	2.31

[1)] $MTTF_D$ value 150 years

Ordering code

F	S		S			
Throttle and check valve	Subplate mounting	Size	Steel body	Needle	Clamping screw	Seal

Code	Size
400	**400**
600	**600**
800	**800**
1200	**1200**
1600	1600

Code	Needle
omit	**Standard 2 stage needle**
4 [1)]	Micro-fine hollow needle with slot

Code	Seal
omit	**NBR**
V	FPM

Code	Clamping screw
omit	**Hexagon socket**
F	With knurled knob

Bold letters =
Short-term availability

[1)] Only for sizes 400 to 600.

FS UK.indd RH 17.04.2015

Δp/Q performance curves

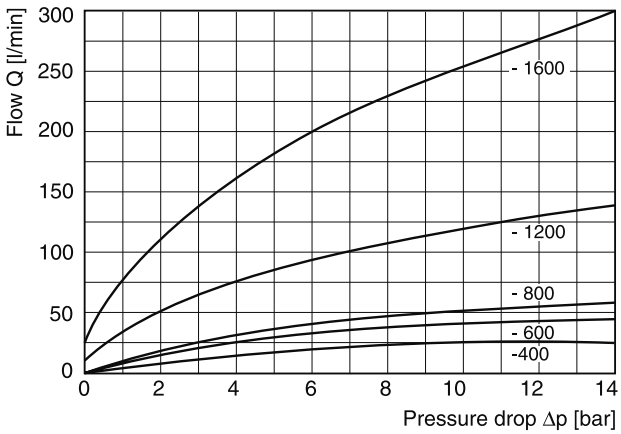

Δp/Q performance curves free flow

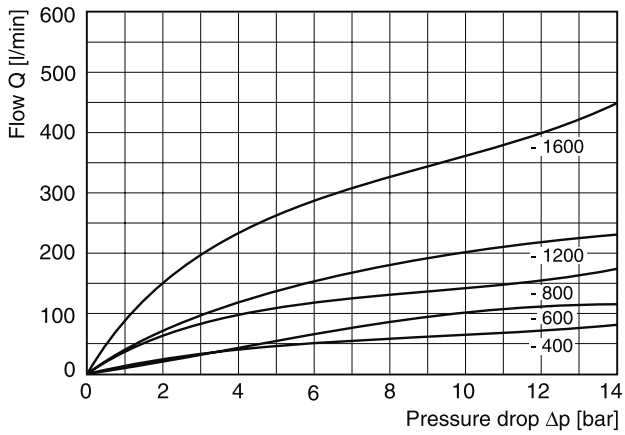

All characteristic curves measured with HLP46 at 50 °C.

5

Dimensions

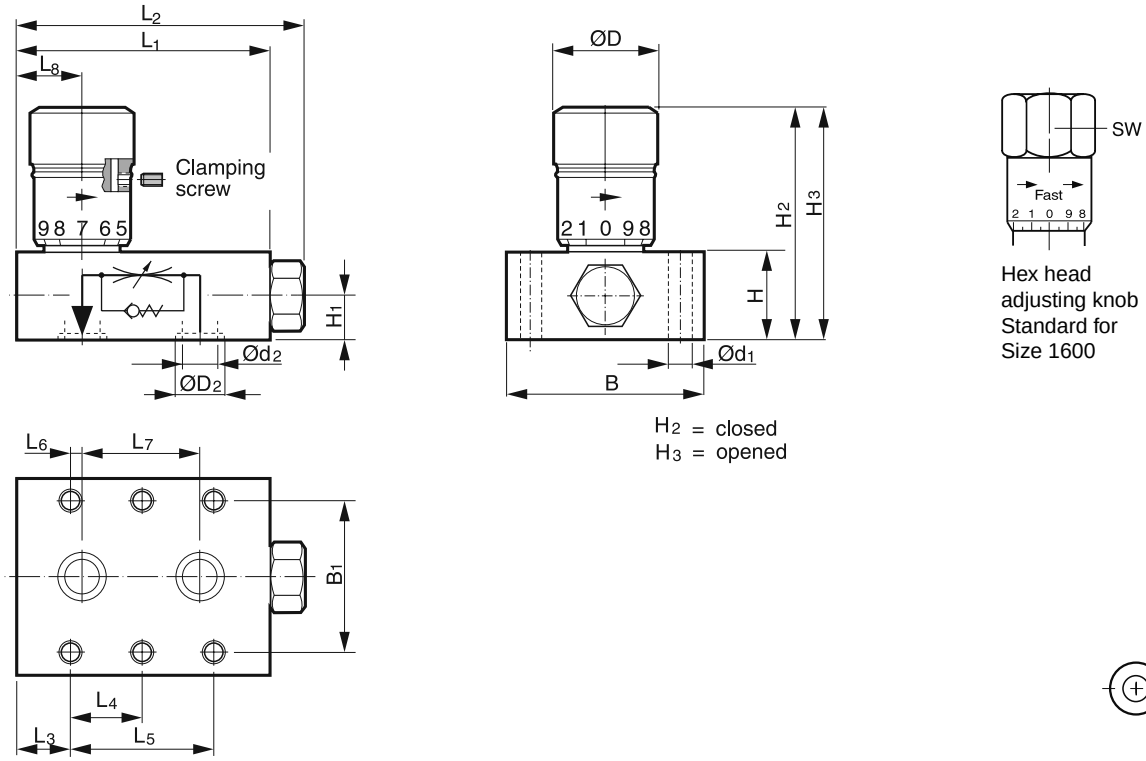

Size	L1	L2	L3	L4	L5	L6	L7	L8	B	B1	H	H1	H2	H3	Ød1	Ød2	ØD2	ØD	SW
FS400	63.5	71.4	14.2	–	35.1	4.9	25.4	21.3	44.5	33.3	22.1	10.9	51.1	56.1	6.8	7.1	13.3	20.6	–
FS600	69.9	78.0	18.3	–	33.3	4.1	25.4	25.4	50.8	38.1	25.4	12.7	61.0	67.3	7.0	10.4	16	25.4	–
FS800	81.0	89.2	21.3	–	38.1	4.1	30.2	30.7	57.2	44.5	31.8	15.7	76.2	83.6	7.0	11.9	19.1	30.0	–
FS1200	103.9	114.6	14.0	38.1	76.2	11.2	54.1	38.6	69.9	54.1	44.5	22.1	95.5	110.5	9.0	16.8	24	34.8	–
FS1600	127.0	137.7	15.7	47.8	95.5	19.3	56.9	45.2	76.2	60.5	50.8	25.4	129.5	146.3	9.0	22.4	32	–	47.5

FS UK.indd RH 17.04.2015

Manatrol 2-way flow control valves for pressure compensated regulation of the flow. As a consequence of pressure changes, the set value can vary by ± 5 % within the tolerance range. Changes in viscosity and in temperature have the same effect and are to be observed.

The series PCCMS is additionally equipped with a built-in check valve for the return flow.

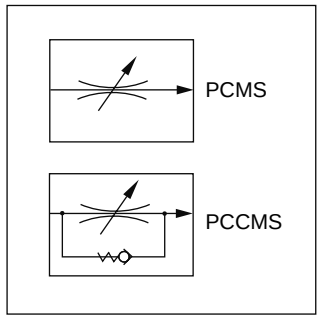

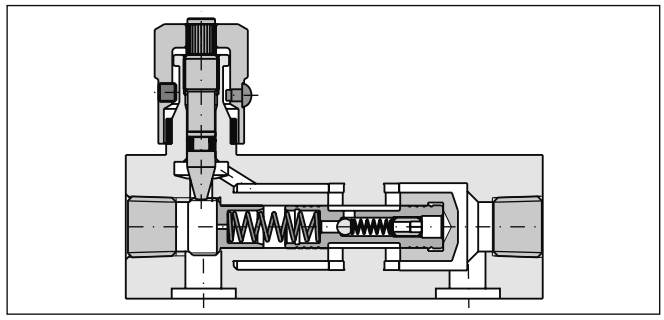

Characteristic values

Size	Max. press. [bar]	Flow control		Check valve		Weight [kg]
		Q[1] [l/min]	Δp [bar]	Q_{max} [l/min]	Δp [bar]	
400	210	1 - 10	7	20	3	0.77
600	210	2 - 25	7	30	3	1.23
800	210	6 - 60	11	75	8	2.50
1200	210	10 - 100	11	130	8	3.18
1600	210	19 - 190	11	250	10	7.41

5

Ordering code

PC		M	S		S			
Pressure compens. flow control valve	**Check valve**	**Manual adjustment**	**Subplate mounting**	**Size**	**Steel body**	**Clamping screw**	**Seal**	**Design series** (not required for ordering)

Code	Check valve
omit	**Without check valve**
C	With check valve

Code	Nominal size
400	400
600	**600**
800	**800**
1200	1200
1600	1600

Code	Seal
omit	**NBR**
V	FPM

Code	Clamping screw
omit	**Hexagon socket**
F	With knurled knob

Bold letters =
Short-term availability

[1] Min. and max. flow rate.

PCMS UK.indd RH 17.04.2015

Controlled flow vs. pressure drop

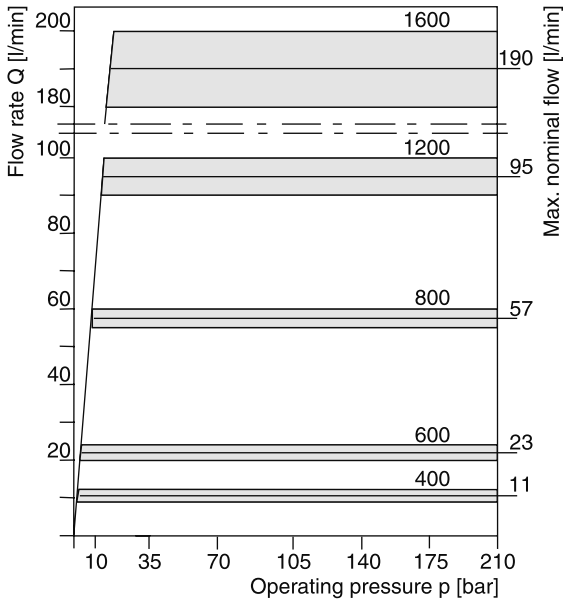

All characteristic curves measured with HLP46 at 50 °C.

Reverse flow vs. pressure drop at minimum and maximum settings

Sizes 400, 600 and 1200

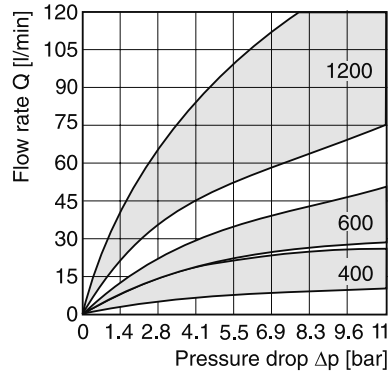

Sizes 800 and 1600

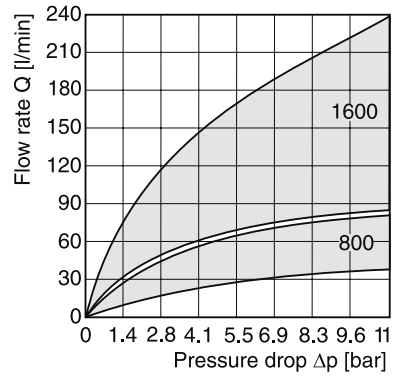

Dimensions

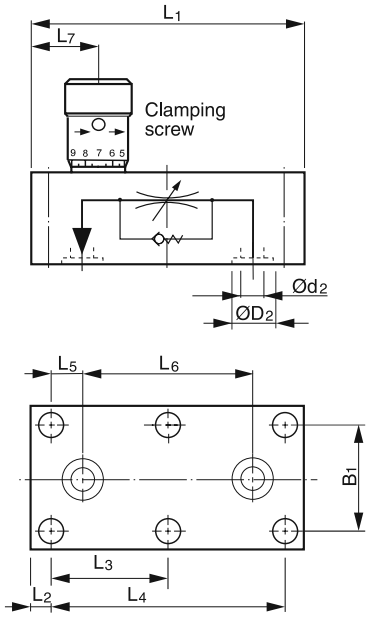

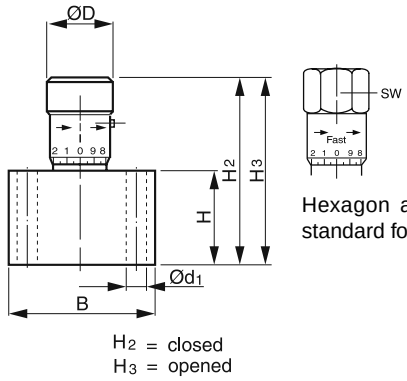

Hexagon adjusting knob, standard for size 1600

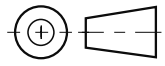

Size	L1	L2	L3	L4	L5	L6	L7	B	B1	H	H2	H3	Ød1	Ød2	ØD2	ØD	SW
400	85.9	6.4	–	72.8	9.3	54.2	21.3	44.5	33.3	28.4	57.7	62.7	6.8	7.1	13.3	20.6	–
600	101.6	6.4	–	88.9	10.4	68.0	25.4	50.8	38.1	31.8	67.8	73.4	7.0	8.6	16.0	25.4	–
800	117.3	6.4	–	104.9	12.7	79.5	44.5	57.2	44.4	44.5	95.0	102.6	7.0	11.9	19.1	30.0	–
1200	142.7	9.7	61.7	123.7	15.7	91.9	40.4	69.9	54.1	57.2	115.8	128.5	9.5	16.8	24.0	34.8	–
1600	171.5	12.7	73.2	146.1	19.1	107.9	49.3	76.2	60.4	69.9	158.2	175.3	9.5	22.4	32.0	–	47.5

2-way flow control valves series GFG2 are used to provide pressure compensated flow. The valve design compensates temperature variations to a certain extent.

The GFG is optionally equipped with a built-in check valve for the return flow.

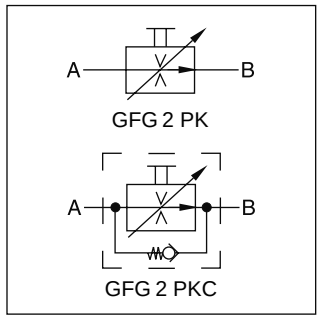

Design

The 2-way flow control valves are used with a triangular flow restrictor and a subsequent pressure compensator. The setting of the flow rate can be locked by a cylinder lock in the adjusting knob against unauthorized adjustment (option S).

Function

The fluid enters through port A through the flow restrictor. Downstream of the flow restrictor the pressure compensator is located. The control edges are provided by four radial bores in the poppet, which are fully open to port B in the neutral position.

Optionally the flow from A to B can be blocked by external pilot pressure applied to port P (option X). This can be used to avoid unintended initial movements of actuators.

The flow adjustment is done via the hand knob with an adjusting angle knob of 270°.

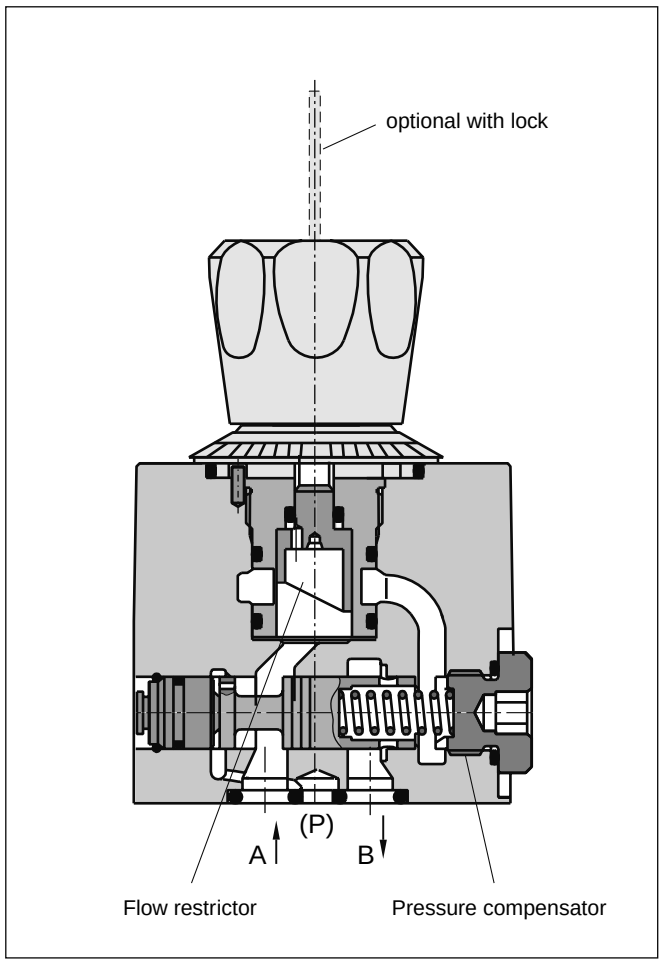

Features

- Flow rate independent of pressure and temperature
- Available for 7 different flow rates
- Good fine adjustment
- External port (P) to block flow from A to B
- Optional reverse flow check valve
- Turn knob with cylinder lock (option S)

Note

Rectifier plate and subplates see 'Accessories' at the end of this chapter.

Ordering code

GFG	2	PK	☐	☐	☐	☐ –	10	☐
2-way flow control valve	Nominal Size NG06	Pressure compensated	Check valve	Locking option	Flow	Seal	Design series	Pilot port

Code	Check valve
omit	**Without check valve**
C	**With check valve**

Code	Locking option
omit	**Standard without lock**
S	**With cylinder lock**

Code	Flow [l/min]
0.6	**0.015 to 0.6**
1.0	**0.015 to 1.0**
1.6	**0.015 to 1.6**
3.2	**0.025 to 3.2**
6.3	**0.025 to 6.3**
12.0	**0.080 to 12.0**
18.0	**0.080 to 18.0**

Code	Control of the pressure compensator
omit	**Standard internal**
X [1)]	External

Code	Seal
omit	**NBR**
V	FPM

Bold letters =
Short-term availability

[1)] Only in combination with integrated check valve.

5

Technical data

Design		Orifice, infinitely variable, pressure-compensated
Actuator		Manual flow rate adjustment
Mounting type		ISO 6263 code: ISO 6263-AB-03-4-B
Mounting position		unrestricted
$MTTF_D$ value	[years]	150
Weight	[kg]	1.1 (without subplate)
Ambient temperature	[°C]	-20...+60
Fluid		Hydraulic oil according to DIN 51524
Fluid temperature	[°C]	-20...+70 (NBR: -25...+70)
Viscosity, permitted recommended	[cSt] / [mm²/s] [cSt] / [mm²/s]	20 ... 400 30 ... 80
Filtering		ISO 4406 (1999); 18/16/13
Min. pressure difference	[bar]	5 (GFG*1.6/3.2), 8.5 (GFG*6.3/12/18)
Operating pressure	[bar]	A; B = 315 , P = 5 (GFG*, GFG*C), A, B, P = 160 (GFG*X)
Effect of pressure on Q_{max} at p = 160 bar	[%]	± 2 (GFG*1.6/3.2/6.3/12), ± 2.5 (GFG*18)
Flow direction A → B B → A		 Flow control function Throttle function or free flow through check valve

Performance curves

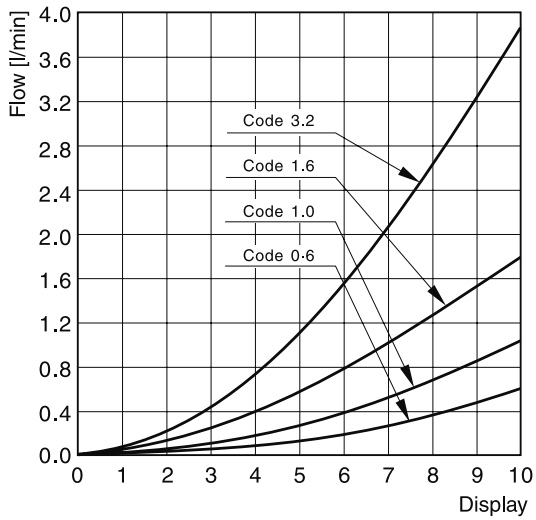

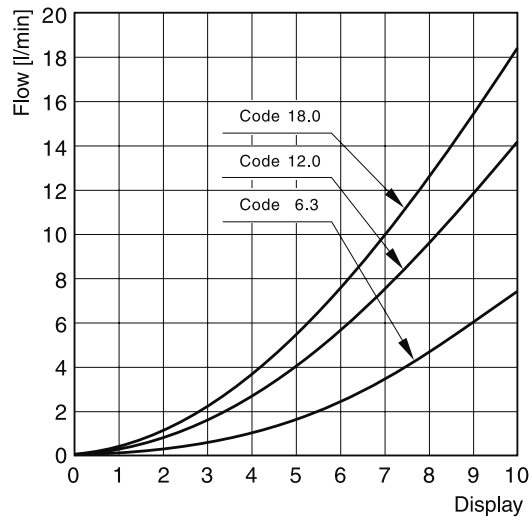

5

All characteristic curves measured with HLP46 at 50 °C.

Changes in pressure cause a change of pre-set flow rate. Flow rate deviations at Q_{max}: ± 2 %

Dimensions

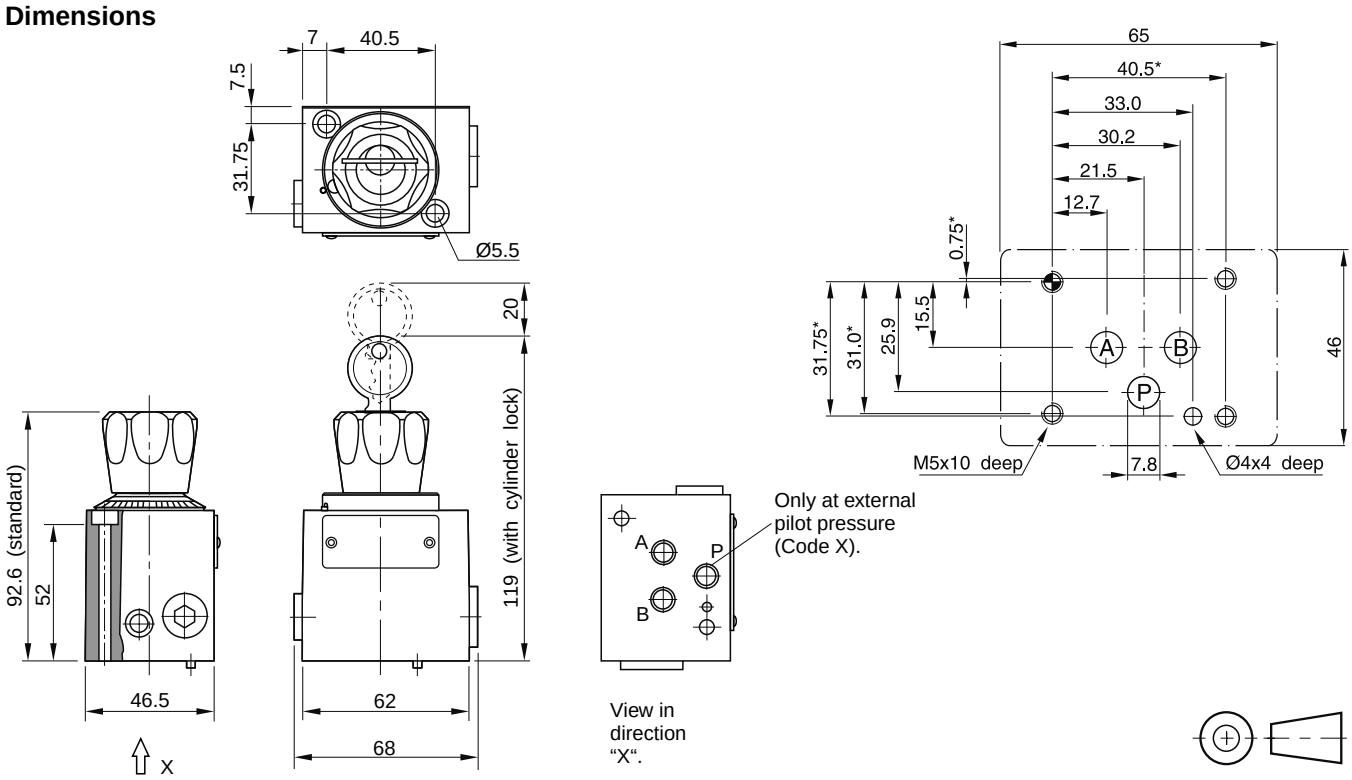

Bolt kits (Cylinder head ISO 4762-12.9 not included)

Nominal size Valve	Valve model	Quantity	Tightening torque [Nm]	Valve without rectifier plate		Valve with rectifier plate	
				Dimensions	Order No.	Dimensions	Order No.
NG 06	GFG2	2	7.6 Nm	2x M5x60	BK380	2x M5x100	BK466

O-rings for sealing the connecting surface

Nominal size Valve	Valve model	Ports	Dimensions Ø-inner x cord thickness	Quantity	Seal kits	
					NBR	FPM
NG 06	GFG2	A and B	9.25 x 1.78	3	SK-GFG2	SK-GFG2 FPM

Sandwich rectifier plate

If a 2-way flow control valve is used in combination with a rectifier plate the valve can be used for meter-in and meter-out flow control of an actuator.

Design

The intermediate rectifier plate is designed with 4 identical, symmetrically arranged check valves. Thus the differential pressure is the same in both flow directions.

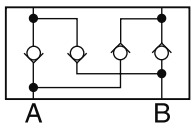

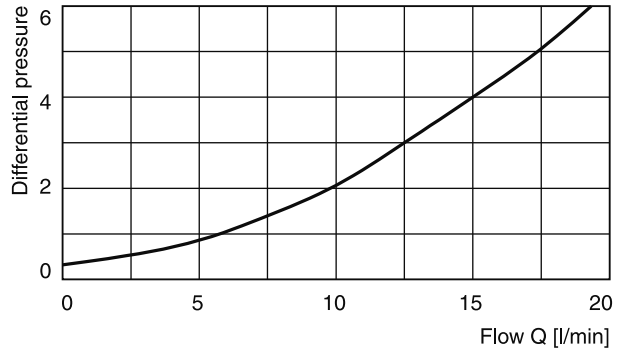

Measured with HLP46 at 50 °C.

5

Dimensions

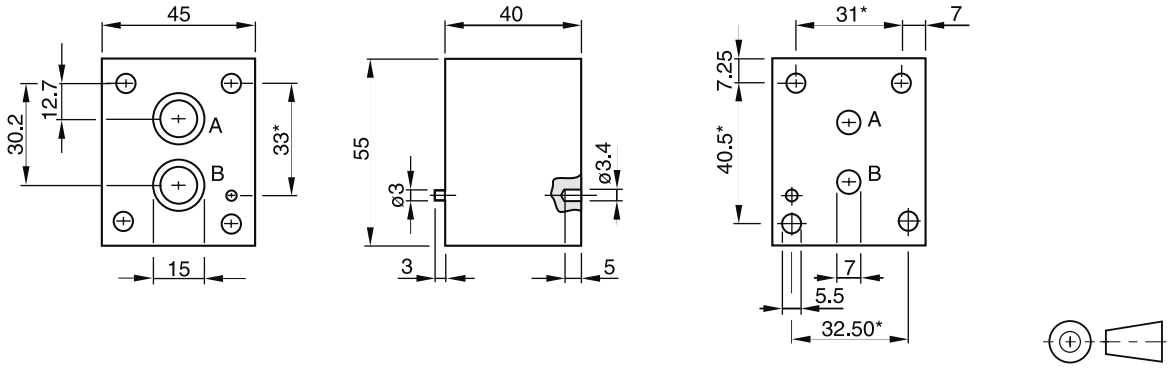

Dimension tolerances
* : ± 0.1mm
others : ± 0.2 mm
holes and silhouette of valve body : untoleranced dimension

Ordering code: HR OA 06 C

O-ring for sealing the connecting surface

Connections	Dimensions	required units
A, B	12 x 1.5	2

Subplates [1)]

Ordering code	
SPD 22 B 910	P, A, B and T = G1/4
SPD 23 B 910	P, A, B and T = G1/8

[1)] Details see chapter 12, series SPD.

2-way flow control valves series 2F1C provide pressure and viscosity compensated flow from port A to port B. The counter direction is blocked (standard) or can be open via an integral reverse flow check valve (optional).

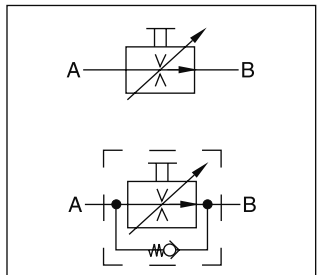

with check valve

Function

The compensator spool is located in front of the metering spool. The metering spool is closed in the neutral position to avoid undesired initial actuator motion. The oil flow to open the metering spool has to pass a needle valve (not shown in the sectional drawing). The needle valve can be adjusted from the front panel to set the response time of the 2F1C.

The metering spool is adjusted by the main control knob. The key lock has three positions:

Lock: Adjustment is locked.

Adjust: Full adjustment is permitted.

Trim: Fine adjustment of ±5 % is possible.

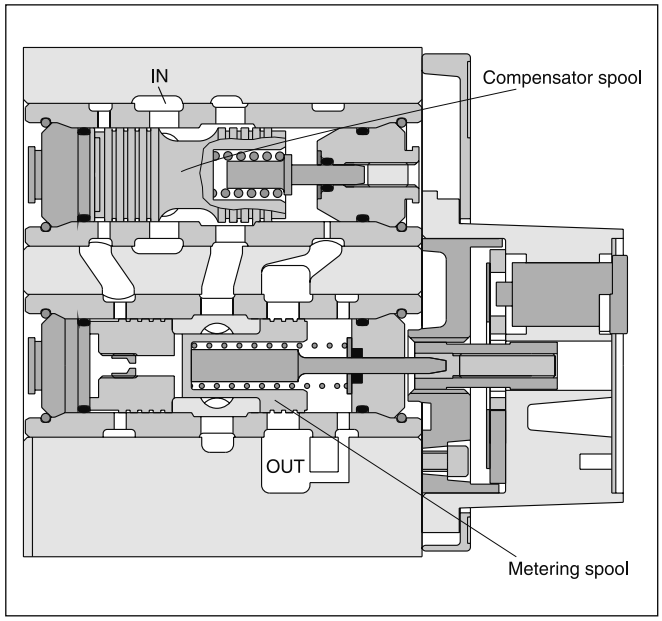

Features

- 2-way flow control valve
- Subplate mounting according to ISO 6263
- Excellent fine adjustment
- Adjustable response time
- Closed in neutral position
- Optional reverse flow check valve
- 2 sizes, NG10 (3/8“), NG16 (3/4“)

Ordering code

2F1C	☐	–	01	B	5	☐	☐
2-way flow control valve	Size		Adjustment knob with lock	Design series	Seal FPM	Reverse flow check	Options

Code	Size
02	NG10 (3/8”)
03	NG16 (3/4”)

Code	Check valve
0	without check
C	with check

General			
Design		Orifice, infinitely variable, pressure-compensated	
Actuator		Manual flow rate adjustment	
Mounting type		ISO 6263	
Mounting position		unrestricted	
$MTTF_D$ value	[years]	150	
Weight	[kg]	6.0 (2F1C02), 9.0 (2F1C03)	
Ambient temperature	[°C]	-20...+60	
Fluid		Hydraulic oil according to DIN 51524	
Fluid temperature	[°C]	-20...+70	
Viscosity, permitted	[cSt] / [mm²/s]	20 ... 400	
recommended	[cSt] / [mm²/s]	30 ... 80	
Filtering		ISO 4406 (1999); 18/16/13	
Min. pressure difference	[bar]	see diagram	
Max. operating pressure		**2F1C02**	**2F1C03**
Port A	[bar]	14...280	14...350
Port B	[bar]	0...270	0...340
Flow direction A → B B → A		Flow control function blocked or free flow through check valve	

5

2F1C UK.indd RH 17.04.2015

5

Performance curves

Flow / knob adjustment characteristics at 210 bar

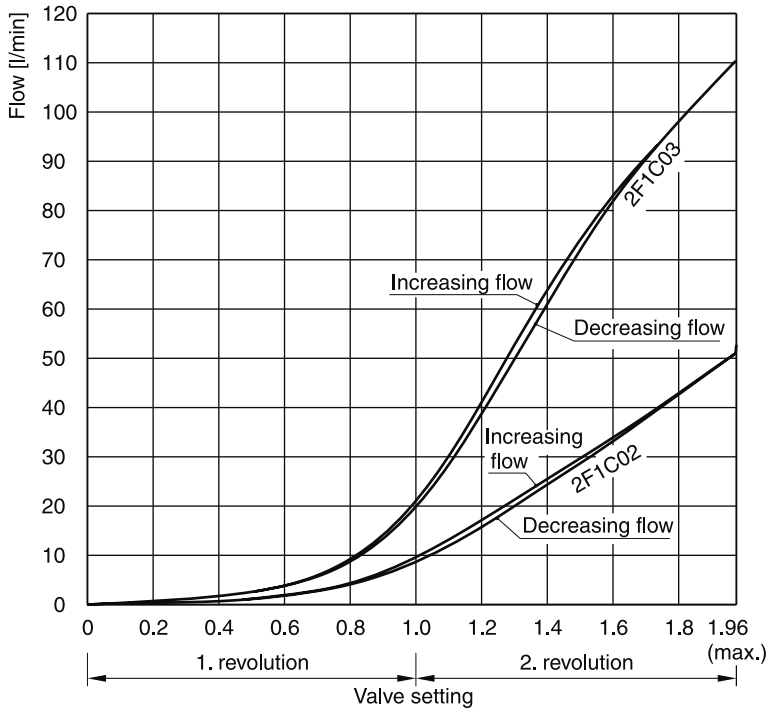

Flow / pressure drop curves

Constant inlet pressure – variable outlet pressure

2F1C02

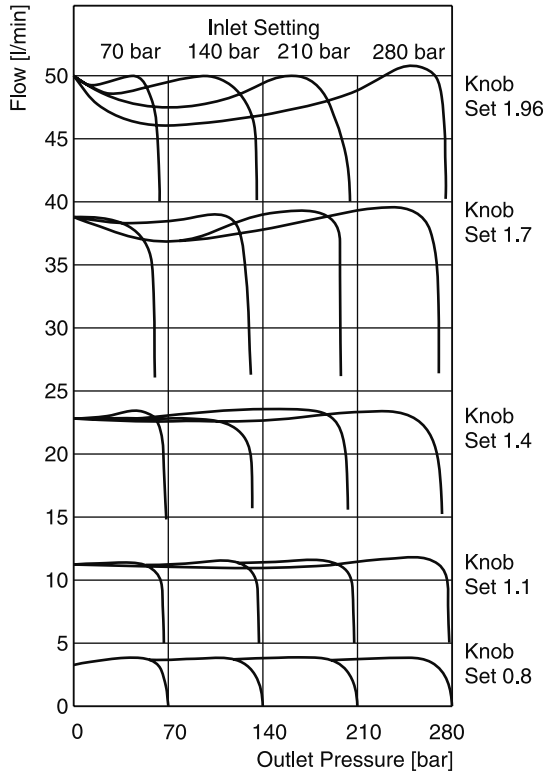

2F1C03

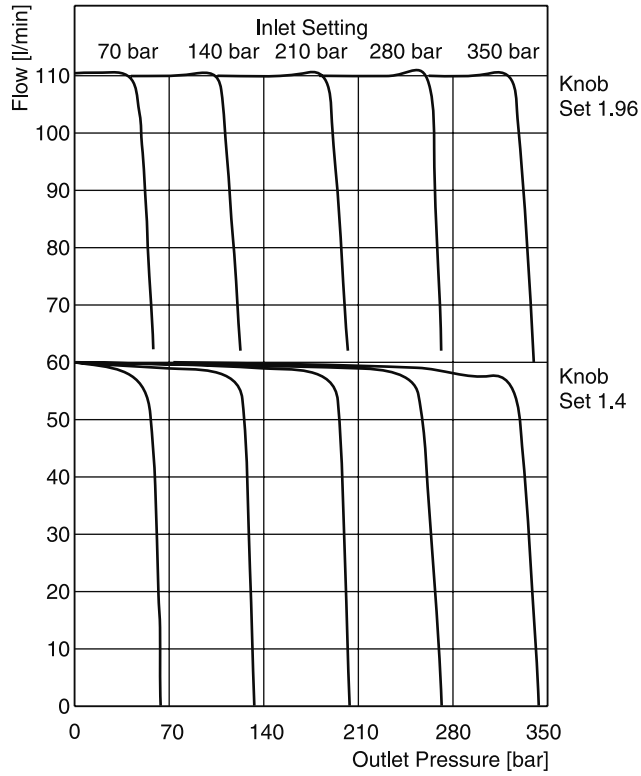

All characteristic curves measured with HLP46 at 50 °C.

Δp/Q performance curves

for reverse flow direction
2F1C02 at 280 bar
2F1C03 at 350 bar

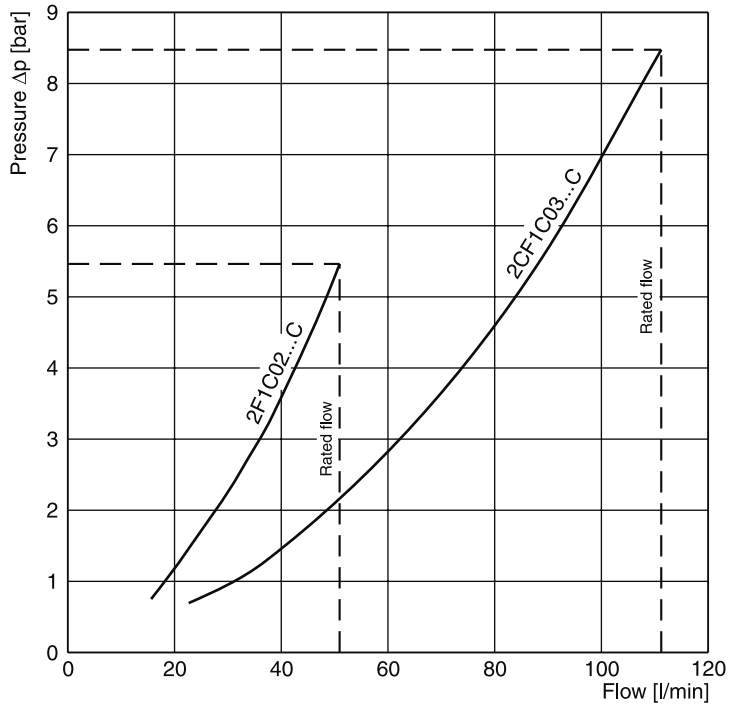

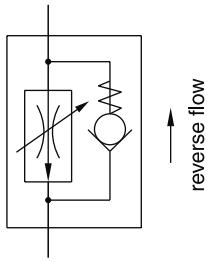

Minimum pressure difference curves

2F1C02

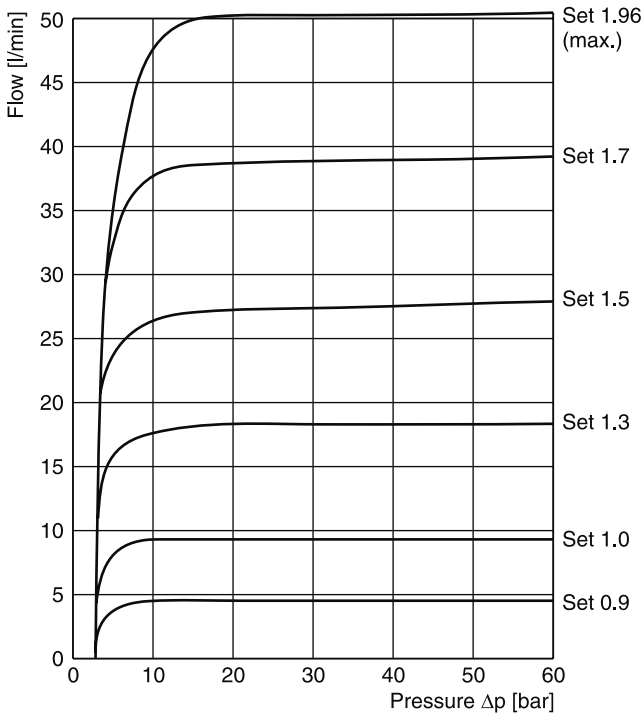

2F1C03

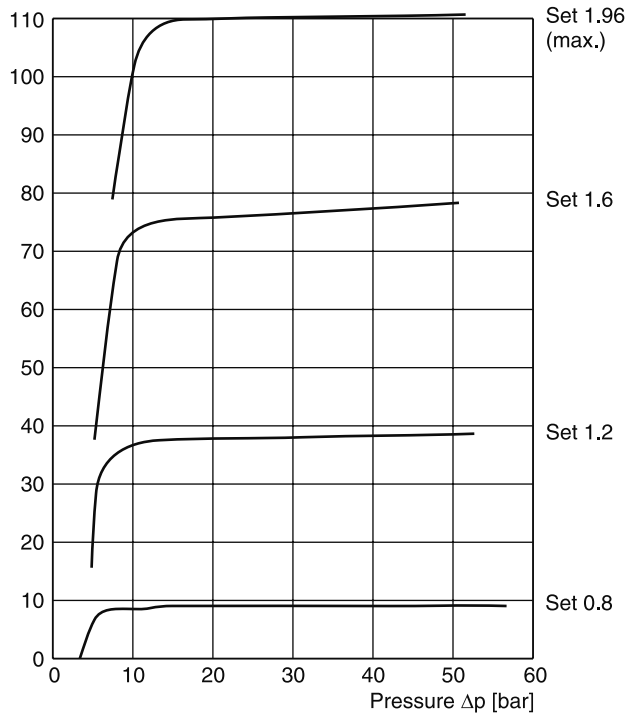

All characteristic curves measured with HLP46 at 50 °C.

2F1C UK.indd RH 17.04.2015

5

Leakage / pressure curves

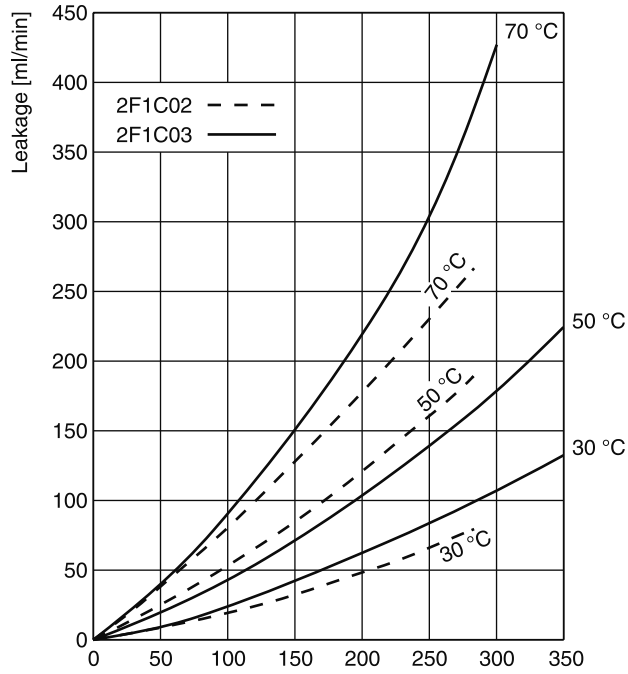

Flow / temperature curves at 210 bar

2F1C02

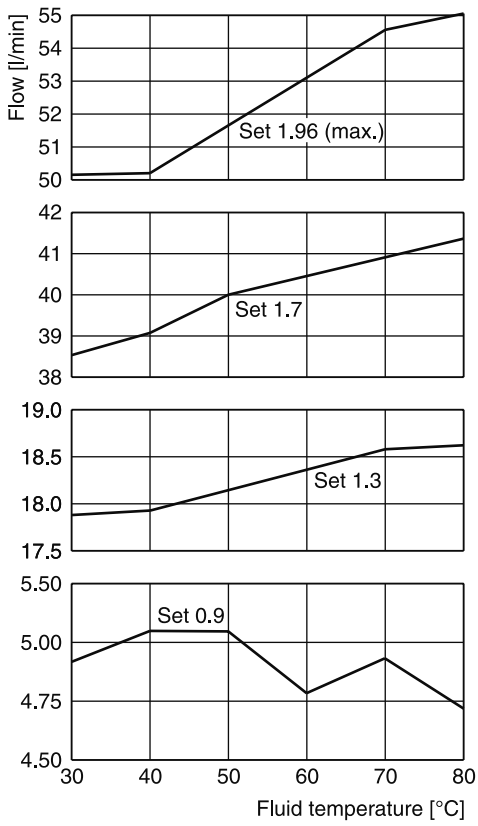

2F1C03

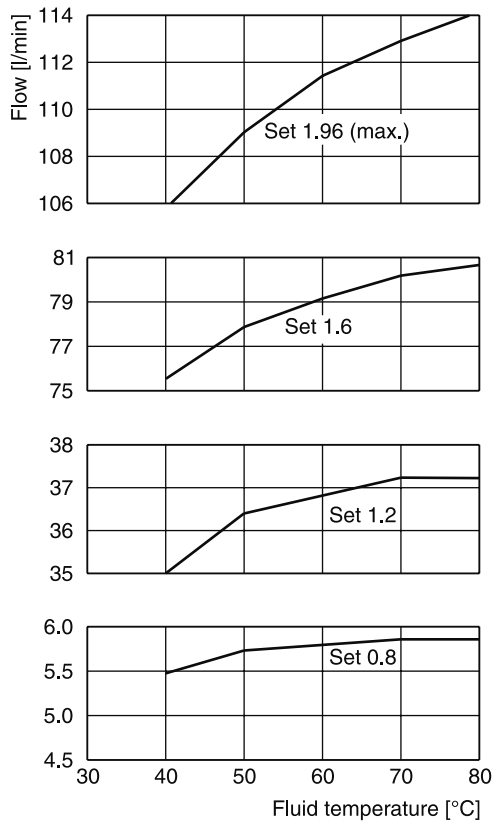

All characteristic curves measured with HLP46 at 50 °C.

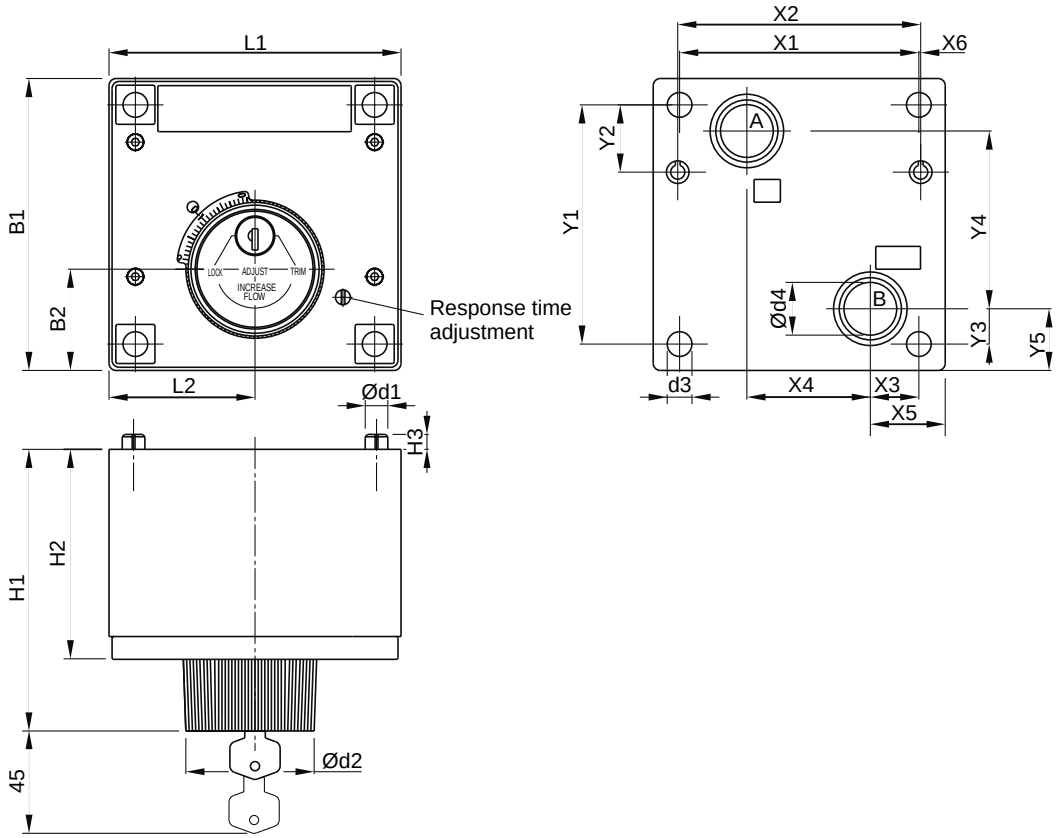

Size	ISO-code	x1	x2	x3	x4	x5	x6	y1	y2	y3	y4	y5
02	6263-AM-07-2-A	76.2	79.4	9.5	44.5	19	–	82.5	23.8	30.2	41.3	39.7
03	6263-AK-06-2-A	101.6	103.2	20.6	52.4	31.8	0.8	101.6	28.6	15.1	75.4	26.2

Size	ISO-code	B1	B2	H1	H2	H3	L1	L2	d1	d2	d3	d4
02	6263-AM-07-2-A	101.6	38.1	119.6	87.4	6.4	95.2	47.6	6.4	57.2	8.7	14.2
03	6263-AK-06-2-A	124	42.9	121.4	89.2	6.4	124	62	9.5	57.2	10.5	22.4

NG	ISO-code	Bolt kit - ISO 4762-12.9		Kit	Surface finish
02	6263-AM-07-2-A	BK538 4x M8x95	31.8 Nm ±15 %	on request	R_{max} 6.3 / 0.01/100
03	6263-AK-06-2-A	BK539 4x M10x95	63 Nm ±15 %		

2F1C UK.indd RH 17.04.2015

Proportional flow control valves of the series DUR*L06 are used to generate pressure-compensated flow from A to B. The valve is equipped with a built-in check valve for the return flow.

For meter-in and meter-out control of an actuator a rectifier plate can be used.

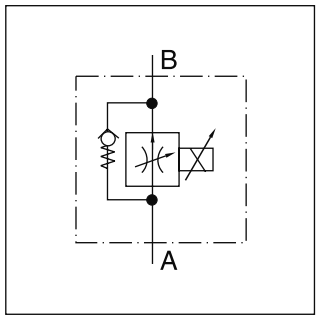

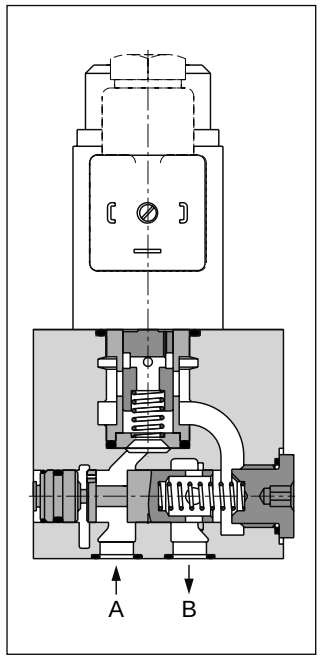

Function

When solenoid current is applied, the metering spool opens against the reset spring and the flow is regulated by the pressure compensating spool to port B.

With the aid of the pressure compensating spool, the pressure drop is held constant on the metering window. Thus pressure load changes are compensated, and the oil flow remains constant.

In combination with the digital electronic module PCD00A-400 the valve parameters can be saved changed and duplicated.

5

Features

- Low hysteresis
- High reproducibility
- Load-independent oil flow
- Bypass check valve
- Mounting pattern to ISO 6263
- 5 flow rates

Note

Rectifier plate and subplates see ‘Accessories’ at the end of this chapter.

Ordering code

DUR		L	06	P	K		
2-way flow control valve with bypass check valve	**Nominal flow**	**Linear solenoid 24 V / 0.68 A**	**Size NG06**	**Progressive performance curve**		**Seal**	**Design series** (not required for ordering)

Code	Flow [l/min]
1,6	1.6
3,2	3.2
6,3	6.3
12	12.0
18	18.0

Code	Seal
A	NBR
1	FPM

Technical data

Design		Electrically adjustable orifice valve with load sensing
Mounting type		Subplate NG06, interface DIN 24340, ISO, CETOP
Mounting position		Unrestricted, horizontal mounting preferred
Ambient temperature	[°C]	-20...+60
$MTTF_D$ value	[years]	150
Weight	[kg]	1.6
Type of voltage	[V]	24
Solenoid nominal current	[mA]	680
Duty cycle		100 % ED
Solenoid connection		Connector as per EN 175301-803
Protection class		IP 65 in accordance with EH60529 (with correctly mounted plug-in connenctor)
Amplifier module		PCD00A-400
Operating pressure	[bar]	max. 210
Fluid		Hydraulic oil according to DIN 51524
Fluid temperature	[°C]	-20...+70 (NBR: -25...+70)
Viskosität, permitted recommended	[cSt] / [mm²/s] [cSt] / [mm²/s]	20 ... 400 30 ... 80
Filtration		ISO 4406 (1999); 18/16/13
Min. pressure difference	[bar]	DUR 1.6/3.2: 3; DUR 6.3/12: 5; DUR 18: 8
Hysteresis at Q_{nom}	[%]	6
Hysteresis at $Q \leq 20\ \% \bullet Q_{nom}$	[%]	6
Repeatability at $\Delta U_{set} = 5$ V	[%]	2

Performance curves

DUR 1.6 L 06 PK*

DUR 12 L 06 PK* / DUR 18 L 06 PK*

DUR 3.2 L 06 PK* / DUR 6.3 L 06 PK*

All characteristic curves measured with HLP46 at 50 °C.

DUR UK.indd RH 17.04.2015

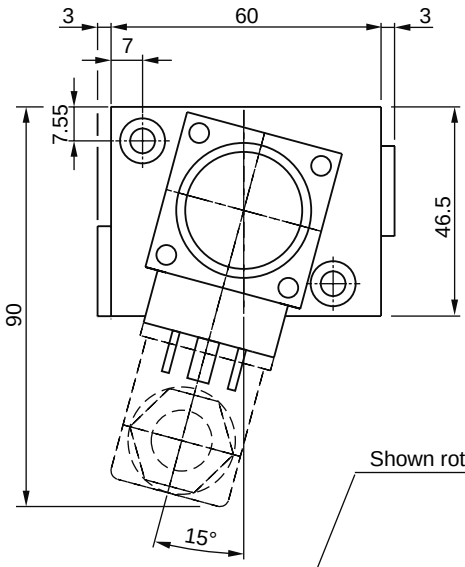

Mounting pattern

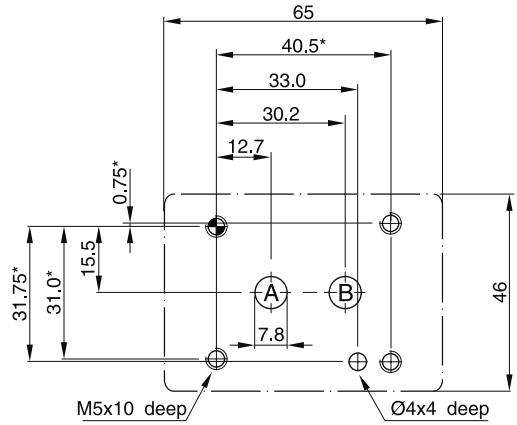

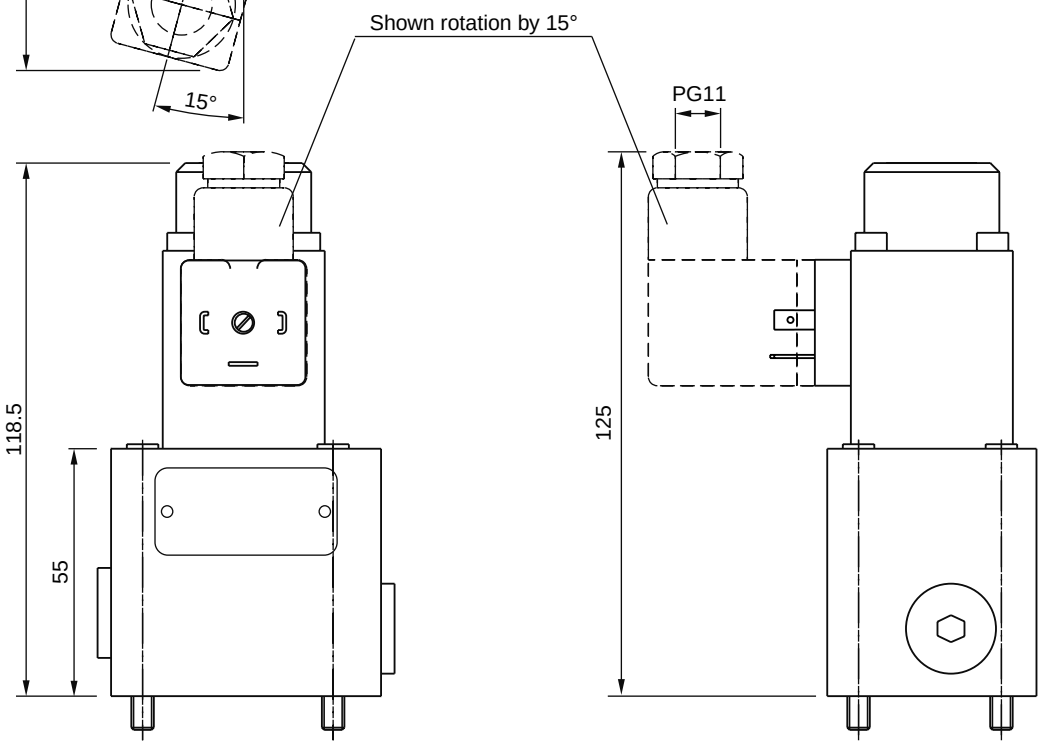

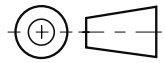

Bolt kits (Cylinder head ISO 4762-12.9 not included)

Nominal size Valve	Valve model	Quantity	Tightening torque [Nm]	Valve without rectifier plate		Valve with rectifier plate	
				Dimensions	Order No.	Dimensions	Order No.
NG06	DUR*L06	2	7.6 Nm	2x M5x60	BK380	2x M5x100	BK466

Seal kits

NBR	FPM
SK-DUR***L	SK-DUR***L FPM

DUR UK.indd RH 17.04.2015

Sandwich rectifier plate

If a 2 way flow control valve is used in combination with a rectifier plate the valve can be used for meter-in and meter-out flow control of an actuator.

Design

The intermediate rectifier plate is designed with 4 identical, symmetrically arranged check valves. Thus the differential pressure is the same in both flow directions.

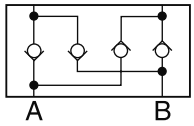

Δp/Q-curve

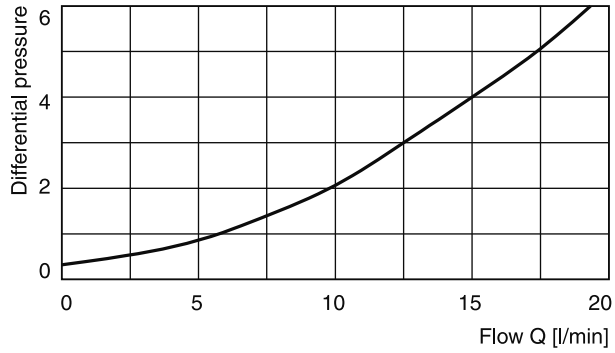

Measured with HLP46 at 50 °C.

5

Dimensions

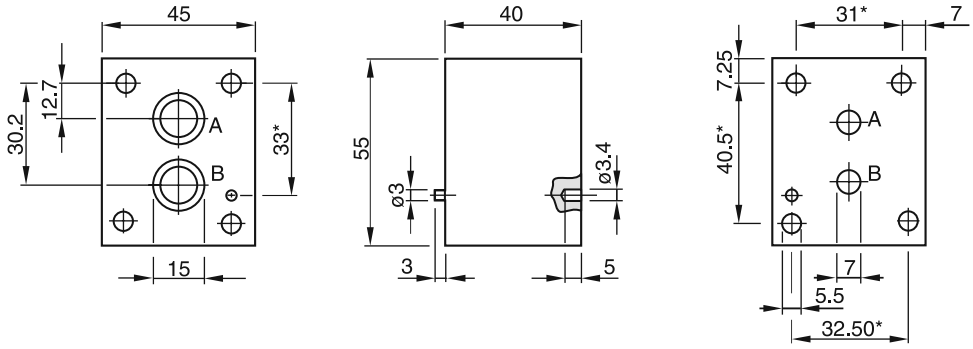

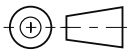

Dimension tolerances
* : ± 0.1mm
others : ± 0.2 mm
holes and silhouette of valve body : untoleranced dimension

Ordering code: HR OA 06 C

O-ring for sealing the connecting surface

Connections	Dimensions	required units
A, B	12 x 1.5	2

Subplates [1)]

Ordering code	
SPD 22 B 910	P, A, B and T = G1/4
SPD 23 B 910	P, A, B and T = G1/8

[1)] Details see chapter 12, series SPD.

Notes

Series	Description	Size											Mounting			Page
	Parker Standard DIN / ISO	1/8	1/4	3/8	1/2	3/4	1	06	10	16	25	32	Subplate	Screw-in	Slip-in	
	Shuttle valves															
SSR								•	•					•		6-2
	Check valves, direct operated															
RK / RB		•	•	•	•									•		6-4
CS			•	•	•	•	•						•			6-7
SPZBE										•	•	•			•	6-9
SPV / SPZ								•	•					•		6-11
C4V									•		•	•	•			6-13
	Check valves, pilot operated															
CPS				•		•							•			6-16
C4V									•		•	•	•			6-18
	2/2-way seat valves															
D4S									•		•	•	•			6-22
	Accessories															
	Plugs															6-32

6

More check valves are presented in the following chapters:
Chapter 7: Sandwich Valves
Chapter 8: Slip-In Cartridge Valves
Chapter 9: SAE Flange Valves
Chapter 10: Valves for Pipe Mounting

The shuttle valve series SSR is designed as a threaded cartridge valve. All parts are assembled in one unit and easy to mount.

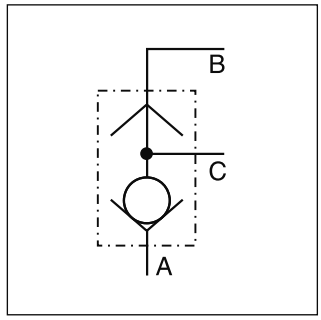

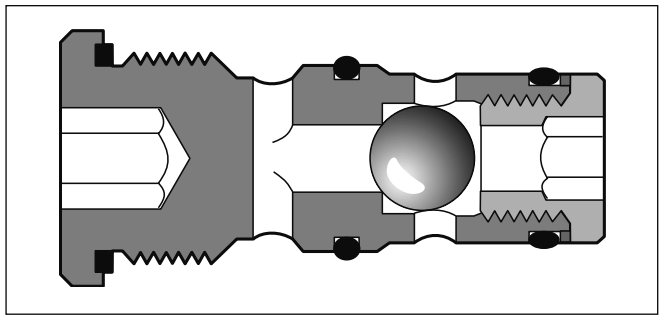

Features

- Little space required
- Leak-free
- Easy assembly

6

Ordering code

[ ] – **SSR** **B** **080** **E** [ ]

Seal	Shuttle valve	Design series	Factory norm, direct operated	Threaded cartridge	Valve size

Code	Seal
omit	**NBR**
V	FPM

Code	Size
06	**NG06**
10	**NG10**

Bold letters =
Short-term availability

Technical data

General			
Design		Threaded cartridge valve	
Mounting position		Unrestricted	
Ambient temperature	[°C]	-20 ... +60	
Nominal size		NG06	NG10
Weight	[kg]	0.5	0.8
Hydraulic			
Flow direction		See symbols	
Fluid		Hydraulic oil as per DIN 51524	
Fluid temperature	[°C]	-20...+70 (NBR: -25...+70)	
Viscosity, permitted	[cSt] / [mm²/s]	20 ... 400	
recommended	[cSt] / [mm²/s]	30 ... 80	
Filtration		ISO 4406 (1999); 18/16/13	
Nominal pressure	[bar]	350	
Flow	[l/min]	40	60

SSR UK.indd CM 03.11.14

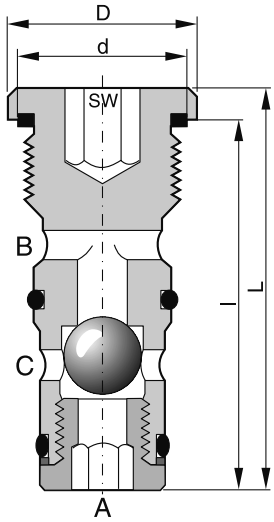

Dimensions	NG06	NG10
D	23	29
L	48	70
d	M18x1.5	M24x1.5
l	42.5	64
SW	8	12
Tightening torque [1] [Nm] ± 15 %	40	65

6

Mounting cavity

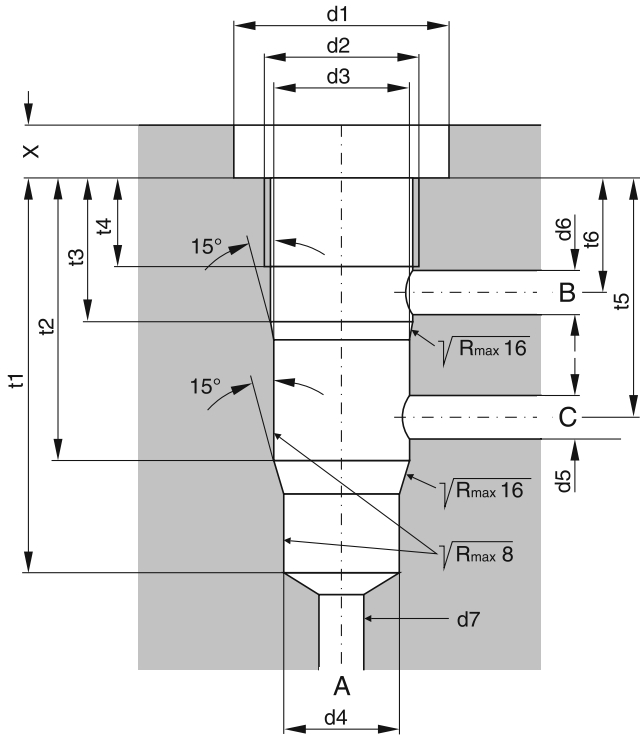

Dimensions	NG06	NG10
d1	25	35
d2	M18 x 1.5	M24 x 1.5
$d3^{H7}$	16	22
$d4^{H7}$	14	20
$d5_{max.}$	6	9
$d6_{max.}$	6	9
$d7_{max.}$	13.5	19.5
t1	45	68
t2	32	51
t3	16	20
t4	10	15
t5	27.5	40
t6	12	14.5
X	6	7

Seal kits

NG	NBR seals	FPM seals
06	SK-SSRB0E06	SK-SSRB0E06V
10	SK-SSRB0E10	SK-SSRB0E10V

[1] Please note the material specification for tightening torque in chapter 12, "accessories"

The check valves series RK and RB are designed to go into simple, threaded cavities. The connection is O-ring sealed on the 118° shoulder in the mounting cavity.

The valve body is supplied as a unit, with a spring loaded, hardened and polished semisphere of stainless bearing steel inside. The seat is also hardened and ground.

Type RK

Type RB

Ordering code

R		
Check valve, screwable	**Mounting direction**	**Size**

Code	Mounting direction
K	**in the blocked direction**
B	**in open flow direction**

Code	Flow [l/min]	Thread	Seal
0 [1)]	**10**	**G1/8A**	**NBR**
1	**20**	**G1/4A**	**NBR**
2	**50**	**G3/8A**	**NBR**
3	**80**	**G1/2A**	**NBR**

Bold letters =
Short-term availability

[1)] Only series RK available.

Technical data

Series design with pipe thread

General								
Code		RK0	RK1	RK2	RK3	RB1	RB2	RB3
Flow	[l/min]	10	20	50	80	20	50	80
Operating pressure	[bar]	700	700	700	500	700	700	500
Opening pressure	[bar]	0.15	0.18	0.2	0.25	0.15	0.07	0.17
Thread (DIN ISO 228/1)		G1/8A	G1/4A	G3/8A	G1/2A	G1/4A	G3/8A	G1/2A
Tightening torque* ±20 %	[Nm]	10	15	20	40	15	20	40
Weight	[g]	5	5	15	15	5	15	20
Mounting position		unrestricted						
Ambient temperature	[°C]	-20 ... +60						
Hydraulic								
Fluid		Hydraulic oil according to DIN 51524						
Fluid temperature	[°C]	-25...+70						
Viscosity, permitted	[cSt] / [mm²/s]	20 ... 400						
Viscosity, recommended	[cSt] / [mm²/s]	30 ... 80						
Filtration		ISO 4406 (1999); 18/16/13						

* In case of strong vibration, it is recommended to secure the mounting threads.

RK-RB UK.INDD CM 16.02.15

Δp/Q performance curves

Type RK

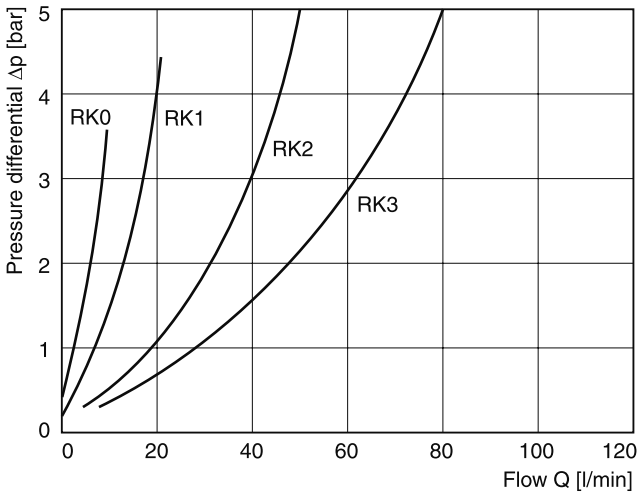

Type RB

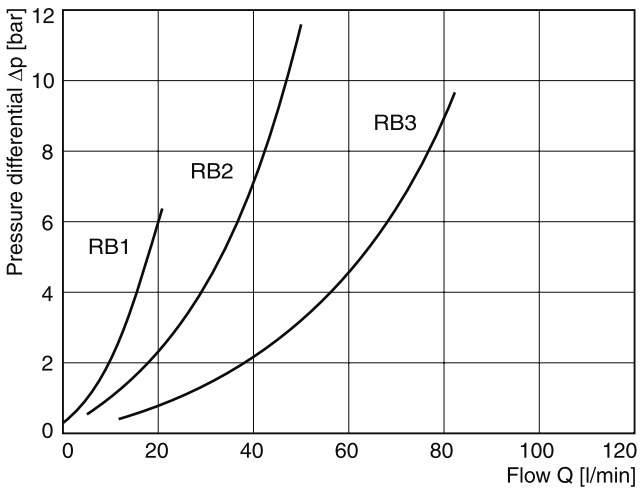

All characteristic curves measured with HLP46 at 50 °C.

6

Mounting direction

Type RK

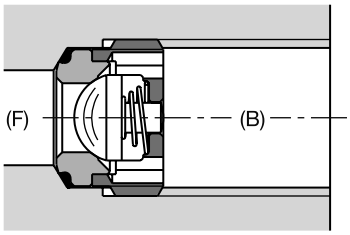

Screwed in, in the blocked direction

Type RB

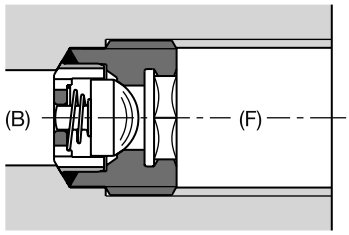

Screwed in, in the open flow direction

Mounting tool

Type RK

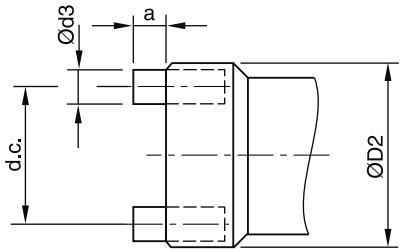

Type	Ordering number	D_2	a	d_3
RK0	5005216	8.6	2	1.5
RK1	5005217	11.5	2.5	2
RK2	5005218	15	2	2.5
RK3	5005219	18.8	4	3.5

Type RK

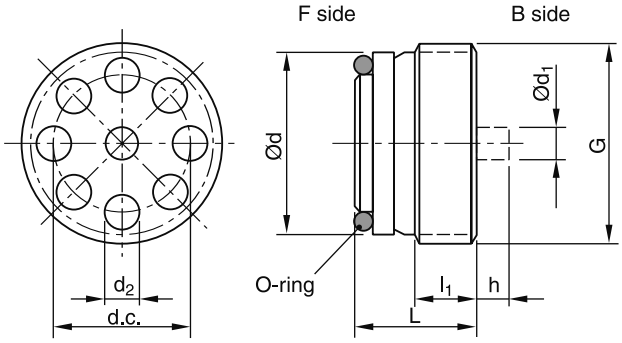

Type	Thread	L	l_1	d	d_1	d_2	h	d.c.	O-ring	Nm
RK0	G1/8A	7.2	4	8.6	2	1.5	1.3	6.8	6x1	8
RK1	G1/4A	9	4.5	11.5	2.6	2.2	1.5	$8.8_{-0.1}$	9x1	15
RK2	G3/8A	11	6	15	3.4	3	2.5	11	11x1.5	20
RK3	G1/2A	13	7.5	18.5	4.3	3.8	3	$14.2_{-0.1}$	14x1.5	40

Type RB

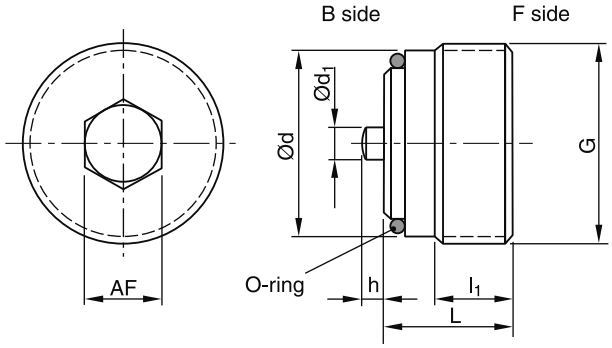

Type	Thread	L	l_1	d	d_1	h	AF	O-ring	Nm
RB1	G1/4A	9.8	5	11.6	2.2	1.3	5	9x1	15
RB2	G3/8A	11.5	7.0	15	3	2	6	11x1.5	20
RB3	G1/2A	13.15	7.5	18.5	3.4	2.5	8	14x1.5	40

6

Type RK

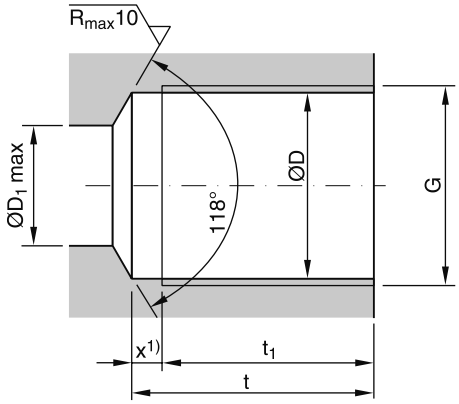

Type	Thread	D	D_1	t	t_1 2)	x 1)
RK0	G1/8	8.7	5	16	13.7	2.3
RK1 and RB1	G1/4	11.8	8	22	19	3
RK2 and RB2	G3/8	15.25	9	24.5	21.5	3
RK3 and RB3	G1/2	19	12	29	25.5	3.5

Type RB

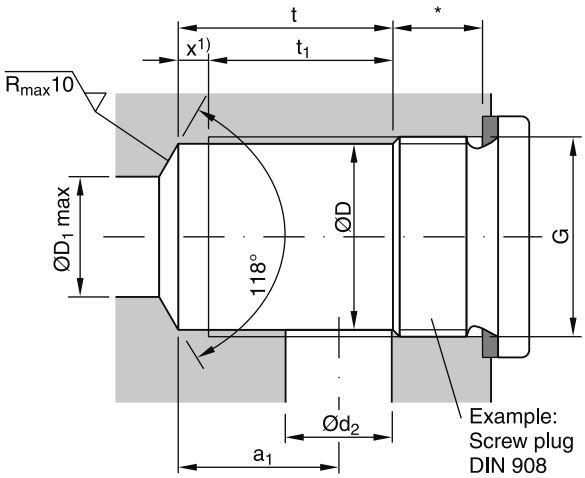

Type	Thread	D	D_1	t	t_1 2)	x 1)	a_1	d_2
RK0	G1/8	8.7	5	12.3	10	2.3	9.5	5
RK1 and RB1	G1/4	11.8	8	14	11	3	11	6
RK2 and RB2	G3/8	15.25	9	17	14	3	13	8
RK3 and RB3	G1/2	19	12	22	18.5	3.5	16	12

Mounting cavity

- for connecting in combination with tube fitting
- for internal line channels

* Required depth depending on type of screw plug, connecting plate etc. used.

1) Thread runout x must be maintained. It may be smaller, but not larger (requirement for a perfect seal using the O-ring).

2) Fully cut-out thread

RK-RB UK.INDD CM 16.02.15

Manatrol check valves of the series CS for subplate mounting provide free flow in one direction and block flow in the counter direction.

Specific Manatrol poppets and poppet guides ensure reliable functional integrity even at high flow rates and/ or pulsations.

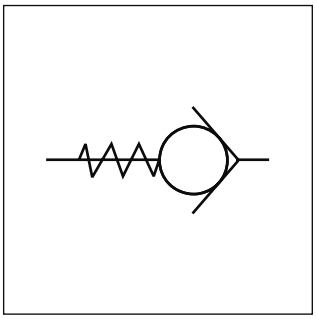

Ordering code

CS		S		
Manifold design	**Nominal size**	**Steel body**	**Opening pressure**	**Seal**

Code	Size
400	**400 (1/4)**
600	**600 (3/8)**
800	**800 (1/2)**
1200	**1200 (3/4)**
1600	1600 (1)

Code	Seal
omit	**NBR**
V	FPM

Code	Pressure [bar]
omit	**0.35**
65	4.5

Bold letters =
Short-term availability

Technical data

General						
Size		**400**	**600**	**800**	**1200**	**1600**
$MTTF_D$ value	[years]	150				
Weight	[kg]	0.5	0.7	1.0	2.3	3.5
Ambient temperature	[°C]	-20 ... +60				
Hydraulic						
Operating pressure	[bar]	210	210	210	210	210
Pressure drop Δp	[bar]	10	10	10	1	1
Flow	[l/min]	65	110	155	112	160
Fluid		Hydraulic oil as per DIN 51524				
Fluid temperature	[°C]	-20...+70 (NBR: -25...+70)				
Viscosity, permitted	[cSt] / [mm²/s]	20 ... 400				
recommended	[cSt] / [mm²/s]	30 ... 80				
Filtration		ISO 4406 (1999); 18/16/13				

Δp/Q performance curves

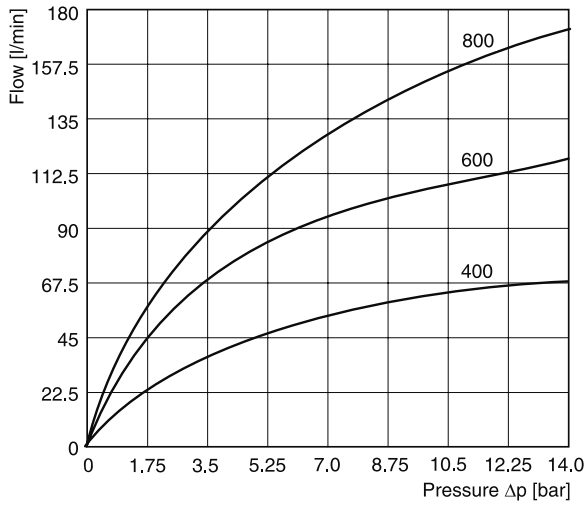

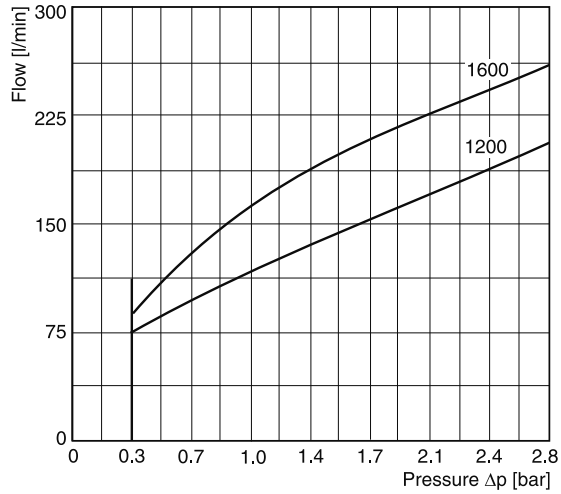

All characteristic curves measured with HLP46 at 50 °C.

6

Dimensions

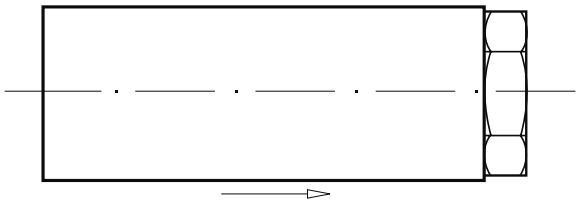

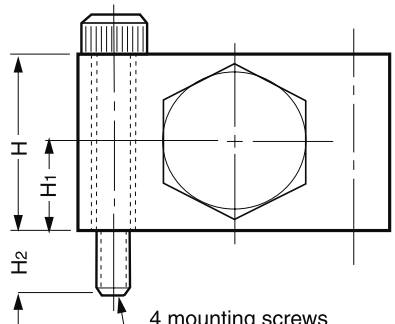

4 mounting screws
(1/4-20 N.C. resp. M6)
required for sizes
400-800

6 mounting screws
(5/16-18 N.C. resp. M8)
required for sizes
1200-1600

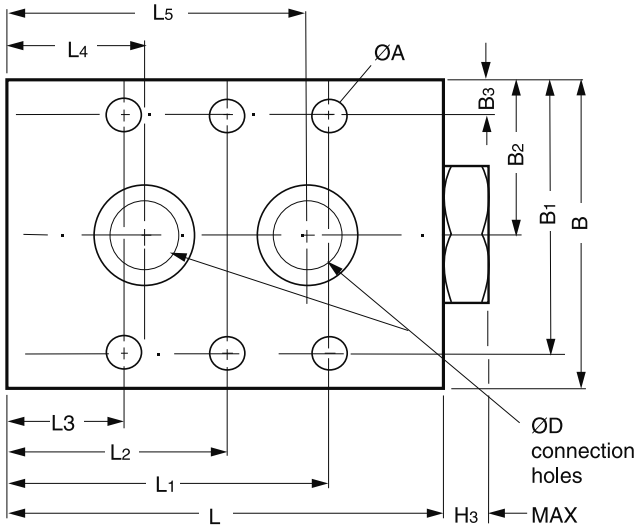

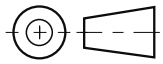

Size	ØD	ØA	L	L1	L2	L3	L4	L5	B3	B2	B1	B	H	H1	H2	H3	Weight [kg]
CS 400S	7.1	6.35	63.5	49.0	–	14.2	19.1	44.5	5.3	22.1	38.9	44.5	22.1	10.9	9.9	7.9	0.5
CS 600S	10.2	6.35	69.9	51.6	–	18.0	22.1	47.5	6.4	25.4	44.5	50.8	25.4	12.7	13.0	8.1	0.7
CS 800S	11.9	6.35	80.7	59.4	–	21.3	25.4	55.6	6.4	28.4	50.8	57.2	31.8	15.7	13.2	8.1	1.0
CS 1200S	17.3	8.5	103.9	89.9	51.8	13.7	25.1	79.2	7.9	34.8	61.7	69.9	44.5	22.1	14.5	10.7	2.3
CS 1600S	22.1	8.5	127.0	111.0	63.5	15.7	34.8	91.9	7.9	38.1	68.1	76.2	50.8	25.4	14.5	10.7	3.5

The check valves series SPZBE are slip-in cartridge valves. The function unit is fixed inside the manifold by a hexagonal plug with slot.

The design is based on CE series with same poppet and sleeve. The different mounting cavity has to be considered.

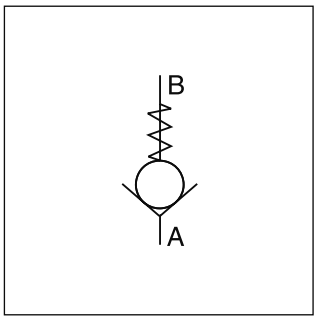

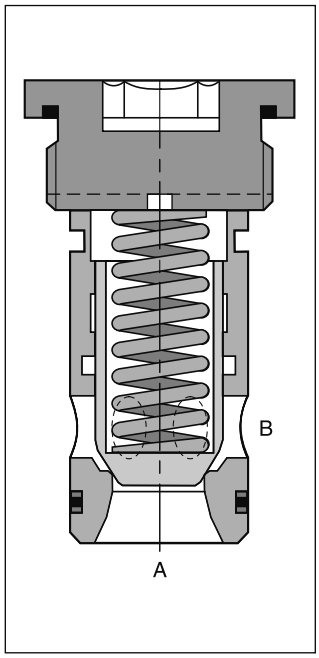

Features

- Little space required
- Leak-free from port B to A
- 4 different opening pressures

Ordering code

[ ]	–	SP	Z	BE	1010	E	[ ]	[ ]
Seal		**Check valve**	**Flow direction A to B**	**Design series, screwed cover**	**Factory norm, poppet, direct operated**	**Slip-in valve**	**Valve size**	**Opening pressure**

Code	Seal
omit	**NBR**
V	FPM

Code	Size
16	**NG16**
25	**NG25**
32	**NG32**

Code	Pressure [bar]
L	0.1
N	**0.5**
S	1.6
U	4.0

Bold letters =
Short-term availability

Technical data

General				
Design		Threaded cartridge valve		
Nominal size		**NG16**	**NG25**	**NG32**
Mounting position		Unrestricted		
Ambient temperature	[°C]	-20 ... +60		
$MTTF_D$ value	[years]	150		
Weight	[kg]	0.25	0.5	1.2
Hydraulic				
Flow direction		Port A to B		
Fluid		Hydraulic oil according to DIN 51524		
Fluid temperature	[°C]	-20...+70 (NBR: -25...+70)		
Viscosity, permitted	[cSt] / [mm²/s]	20 ... 400		
recommended	[cSt] / [mm²/s]	30 ... 80		
Filtration		ISO 4406 (1999); 18/16/13		
Nominal pressure	[bar]	350		
Opening pressure	[bar]	0.1; 0.5; 1.6 and 4.0		
Flow	[l/min]	250	450	900

SPZBE UK.INDD CM 16.02.15

Δp/Q performance curves

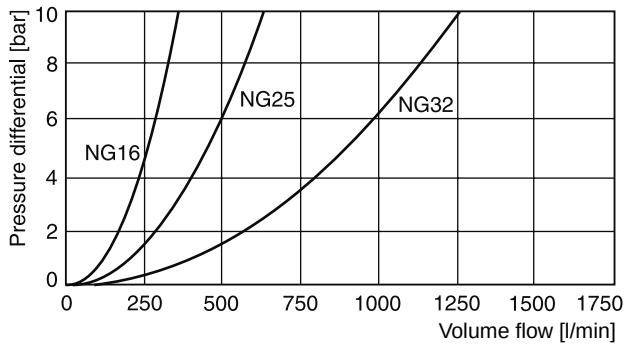

All characteristic curves measured with HLP46 at 50 °C.

Dimensions

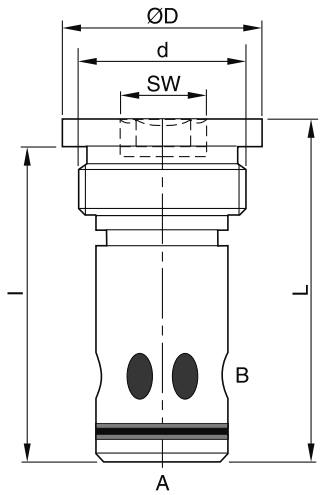

Dimensions	NG16	NG25	NG32
D	40	55	72
L	72.5	89	109.5
d	M33x2	G1½"	G2"
l	66	80.5	99.5
SW	17	24	32
Tightening torque [1] [Nm] ± 15 %	225	300	550

Springs

Spring Type	Ordering Number		
	NG16	NG25	NG32
L 0.1 bar	45051368	45051375	45051376
N 0.5 bar	45051369	45051374	45051377
S 1.6 bar	45051370	45051372	45051378
U 4.0 bar	45051371	45051373	45051379

Mounting cavity

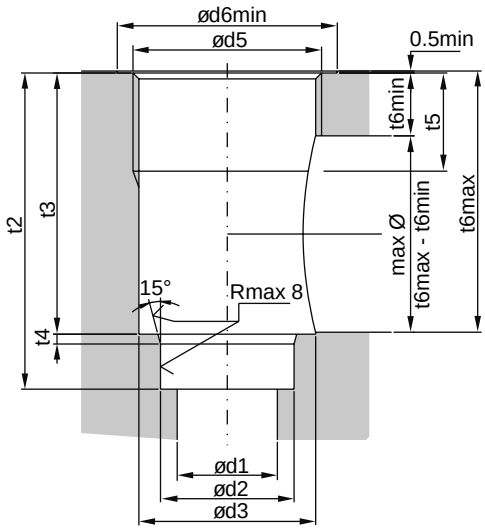

Size	NG16	NG25	NG32
d1	18	25.5	36
$d2^{H7}$	25	34	45
d3	31	45	57
d5	M33x2	G1½"	G2"
$d6_{min}$	41	56	73
$t2^{+0.1}$	66	80.5	99.5
t3	53	66.5	84.5
t4	2	2.5	2.5
t5	21	25	30
$t6_{min}$	16	16	24
$t6_{max}$	52.5	66	84

Seal kits

NG	NBR seals	FPM seals
16	SK-SPZBE10E16	SK-SPZBE10E16V
25	SK-SPZBE10E25	SK-SPZBE10E25V
32	SK-SPZBE10E32	SK-SPZBE10E32V

[1] Please note the material specification for tightening torque in chapter 12, "accessories".

The check valve series SPV and SPZ are designed as threaded cartridge valves. All parts are assembled in one unit and easy to mount.

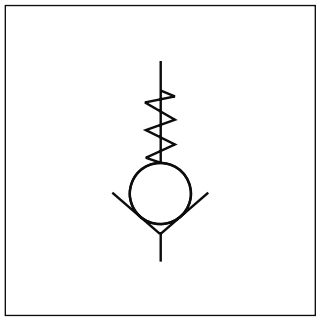

Features

- Little space required
- Leak-free
- Easy assembly

Ports

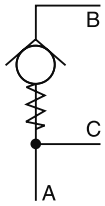

Flow direction V

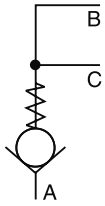

Flow direction Z

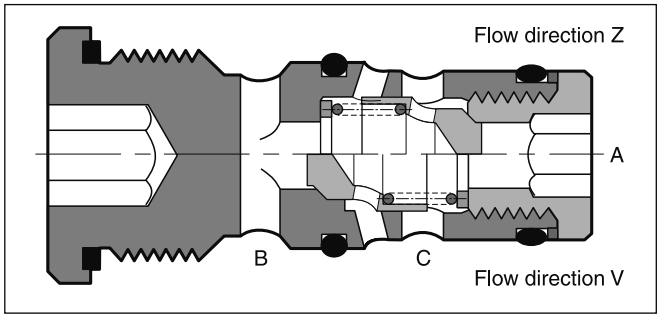

Ordering code

[ ]	—	SP	[ ]	B	030	E	[ ]	M
Seal		**Check valve**	**Flow direction**	**Design series**	**Factory norm, direct operated**	**Threaded cartridge**	**Valve size**	**Spring 0.3 bar**

Code	Seal
omit	**NBR**
V	FPM

Code	Flow direction
V	**Port B → A and C**
Z	**Port A → B and C**

Code	Size
06	**NG06**
10	**NG10**

Bold letters =
Short-term availability

Technical data

General			
Design		Threaded cartridge valve	
Nominal size		**NG06**	**NG10**
Mounting position		Unrestricted	
Ambient temperature	[°C]	-20 ... +60	
Weight	[kg]	0.5	0.8
Hydraulic			
Flow direction		See symbols	
Fluid		Hydraulic oil according to DIN 51524	
Fluid temperature	[°C]	-20...+70 (NBR: -25...+70)	
Viscosity, permitted	[cSt] / [mm²/s]	20 ... 400	
recommended	[cSt] / [mm²/s]	30 ... 80	
Filtration		ISO 4406 (1999); 18/16/13	
Nominal pressure	[bar]	350	
Opening pressure	[bar]	0.3	
Flow	[l/min]	40	60

SPV-SPZ UK.INDD CM 16.02.15

Δp/Q performance curve

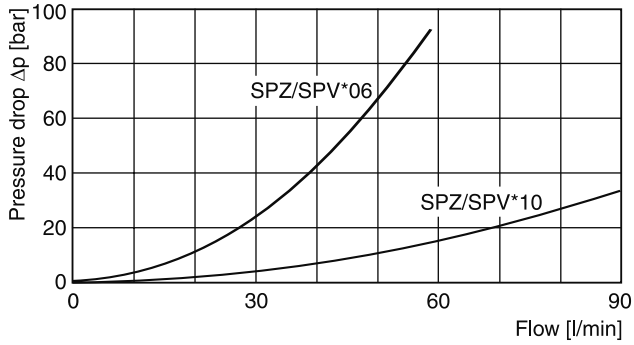

Characteristic curves measured with HLP46 at 50 °C.

Dimensions

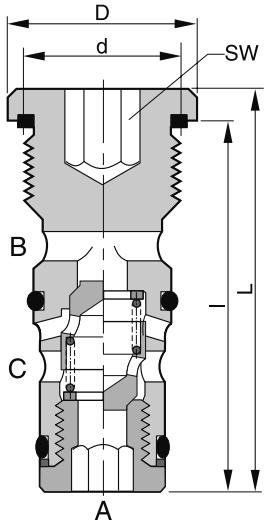

Dimensions	NG06	NG10
D	23	29
L	48	70
d	M18x1.5	M24x1.5
l	42.5	64
SW	8	12
Tightening torque [1] [Nm] ± 15 %	40	65

Mounting cavity

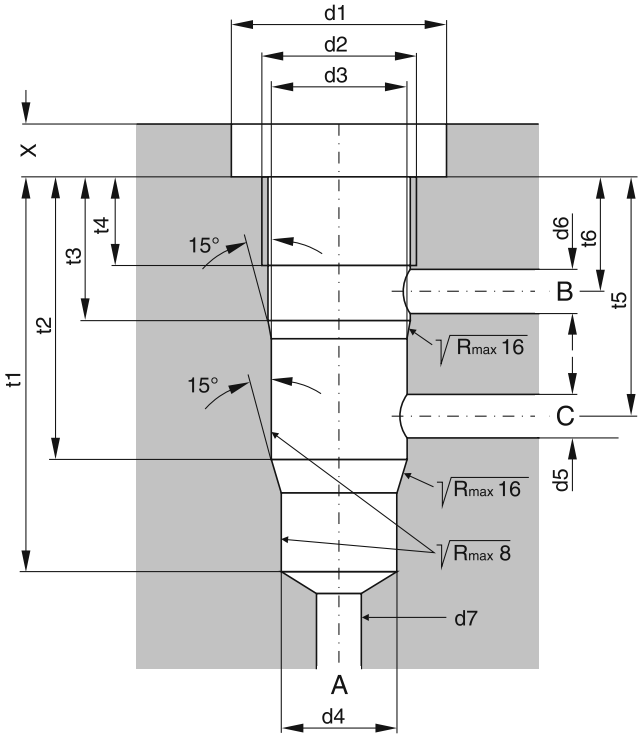

Dimensions	NG06	NG10
d1	25	35
d2	M18 x 1.5	M24 x 1.5
$d3^{H7}$	16	22
$d4^{H7}$	14	20
$d5_{max.}$	6	9
$d6_{max.}$	6	9
$d7_{max.}$	13.5	19.5
t1	45	68
t2	32	51
t3	16	20
t4	10	15
t5	27.5	40
t6	12	14.5
X	6	7

Seal kits

NG	NBR seals	FPM seals
06	SK-SPV/ZB0E06	SK-SPV/ZB0E06V
10	SK-SPV/ZB0E10	SK-SPV/ZB0E10V

[1] Please note the material specification for tightening torque in chapter 12, "accessories".

Direct operated check valves C4V allow free flow from A to B. The counter direction is blocked. The C4V series is equipped with a leak-free seat type cartridge.

Function

The pressure arising in port A lifts the poppet from the valve seat and releases the flow to B. In the counter direction, the spring and the pressure on top of the cartridge hold the poppet onto the seat and block the flow.

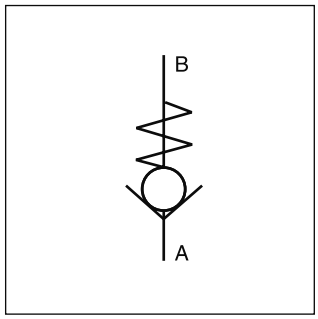

C4V06

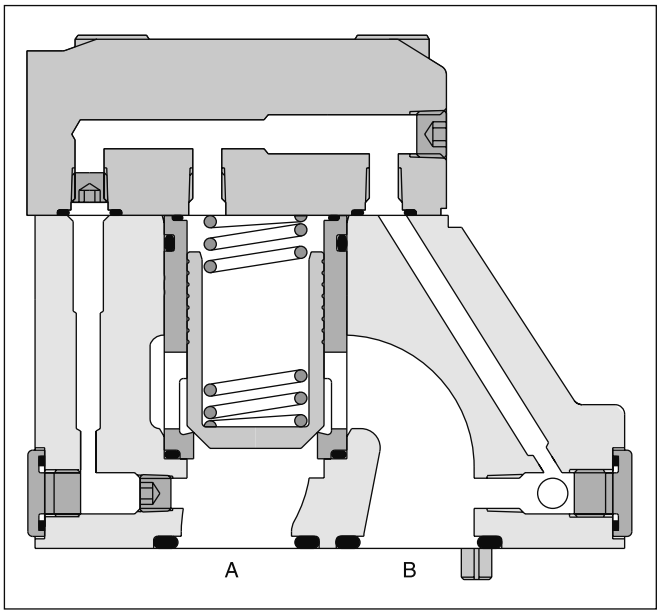

C4V10

Ordering code

C4V	☐	–	5	3	0	☐	B	☐	☐
Check valve direct operated	Nominal size		Max. pressure 350 bar	Subplate mounting		Approx. cracking pressure	Design series	Seal	Options

Code	Nominal size
03	NG10
06	NG25
10	NG32

Code	Seal
1	NBR
5	FPM

Code	Approx. cracking pressure [bar]	
	C4V03	C4V06/10
1	2.8	3.5
2	0.5	0.5
3	0.3	0.3
4	2.2	2.2
5	—	9.0
6	1.2	1.2
7	3.0	—

Technical data

General				
Nominal size		**NG10**	**NG25**	**NG32**
Subplate mounting		ISO 5781		
Mounting position		Unrestricted		
Ambient temperature	[°C]	-20...+60		
$MTTF_D$ value	[years]	150		
Weight	[kg]	2.8	4.6	6.1
Hydraulic				
Max. operating pressure	[bar]	350		
Nominal flow	[l/min]	150	270	450
Fluid		Hydraulic oil according to DIN 51524		
Fluid temperature	[°C]	-20...+70 (NBR: -25...+70)		
Viscosity, permitted	[cSt] / [mm²/s]	20...400		
recommended	[cSt] / [mm²/s]	30...80		
Filtration		ISO 4406 (1999); 18/16/13		

6

Δp/Q performance curve

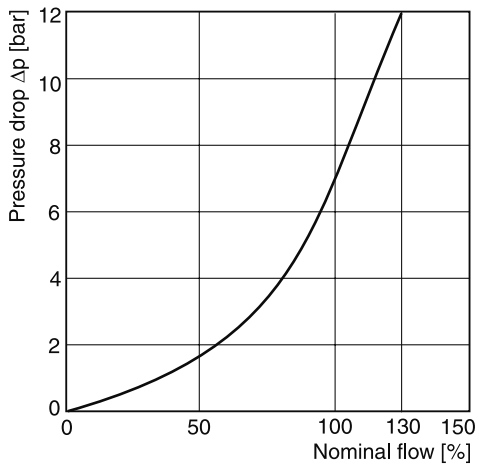

Characteristic curve measured with HLP46 at 50 °C.

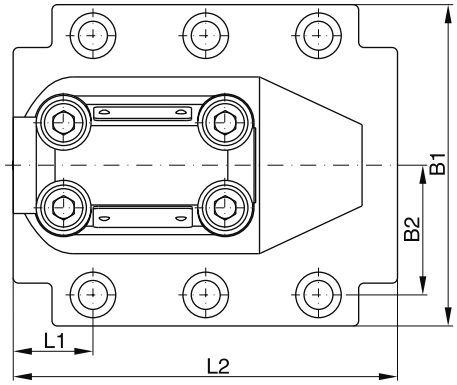

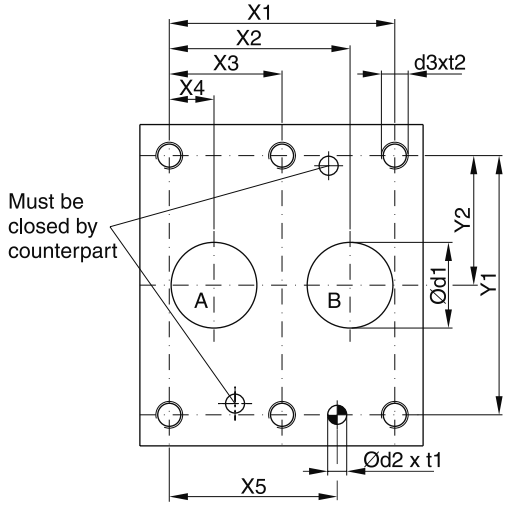

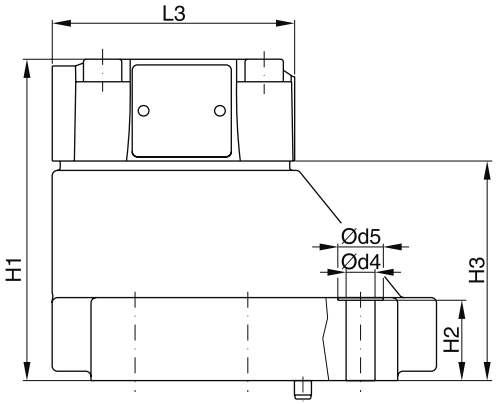

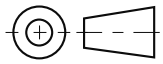

NG	ISO-code	x1	x2	x3	x4	x5	y1	y2	B1	B2	H1	H2	H3	L1	L2
10	5781-06-07-0-00	42.9	35.8	–	7.2	31.8	66.7	33.4	87.3	33.4	83	21	45	29	94.8
25	5781-08-10-0-00	60.3	49.2	–	11.1	44.5	79.4	39.7	105	39.7	107.5	29	69.5	34.7	126.8
32	5781-10-13-0-00	84.2	67.5	42.1	16.7	62.7	96.8	48.4	120	48.4	120	30	82	30.6	144.3

Tolerance for all dimensions ±0.2

NG	ISO-code	d1max	d2	t1	d3	t2	d4	d5
10	5781-06-07-0-00	15	7.1	8	M10	16	10.8	17
25	5781-08-10-0-00	23.4	7.1	8	M10	18	10.8	17
32	5781-10-13-0-00	32	7.1	8	M10	20	10.8	17

NG	ISO-code	Bolt kit			Kit NBR	Kit FPM	Surface finish
10	5781-06-07-0-00	BK505	4x M10x35 ISO 4762-12.9	63 Nm ±15 %	S26-58507-0	S26-58507-5	R_{max}6.3 ▱ 0.01/100
25	5781-08-10-0-00	BK485	4x M10x45 ISO 4762-12.9	63 Nm ±15 %	S26-58475-0	S26-58475-5	
32	5781-10-13-0-00	BK506	6x M10x45 ISO 4762-12.9	63 Nm ±15 %	S26-58508-0	S26-58508-5	

C4V UK.INDD CM 26.02.15

Pilot operated check valves of the series CPS allow free flow in one direction (A to B). The counter-flow direction (B to A) is blocked.

By applying pilot pressure, the poppet can be lifted from its seat against the pressure in port B. Thus flow in the counter-direction is also possible. There are 1 and 2 stage poppets available with pilot ratios of 5 : 1 and 40 : 1, to suit different operating conditions. The CPS needs to be externally drained via port L.

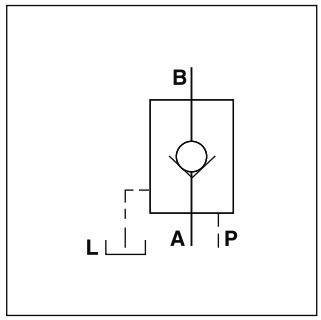

Ordering code

CP	S		S		M	
Pilot operated check valve	Manifold mounting	Port size	Steel body	Pilot ratio	Steel poppet	Seal

Code	Port size
600	**600 (⅜")**
1200	**1200 (¾")**

Code	Seal
omit	**NBR**
V	FPM

Code	Ratio	Stage
5	**5:1**	**1**
40	40:1	2

Bold letters =
Short-term availability

Pilot ratios

Poppet 1 stage

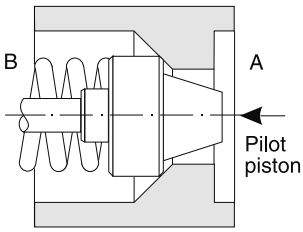

Surface ratio 5 : 1 (pilot spool: poppet surface) for quick response time without decompression.

Poppet 2 stage

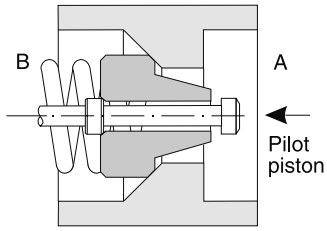

Surface ratio 40 : 1 (pilot spool: decompression pin surface) for low shock or oscillation performance from decompression.

Technical data

General			
Size		600	1200
Max. operating pressure	[bar]	210	210
Max. pilot pressure	[bar]	210	70
Flow Q_{max} at Δp 2.7 bar	[l/min]	30	95
Weight	[kg]	4	7
Ambient temperature	[°C]	-20...+60	
Hydraulic			
Fluid		Hydraulic oil according to DIN 51524	
Fluid temperature	[°C]	-20...+70 (NBR: -25...+70)	
Viscosity, permitted	[cSt] / [mm²/s]	20...400	
recommended	[cSt] / [mm²/s]	30...80	
Filtration		ISO 4406 (1999); 18/16/13	

CPS UK.INDD CM 16.02.15

Δp/Q performance curves

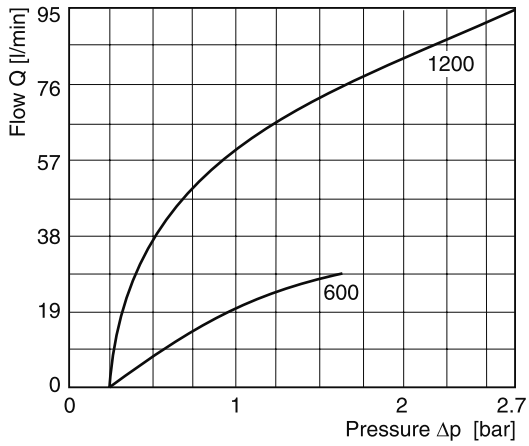

All characteristic curves measured with HLP46 at 50 °C.

Dimensions

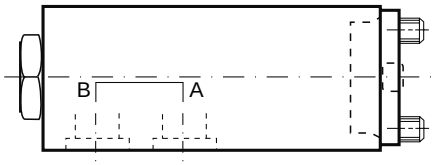

A to B free flow direction

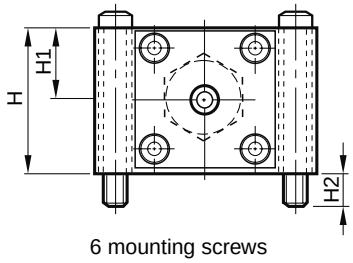

6 mounting screws
M8 for size 600
6 mounting screws
M10 for size 1200

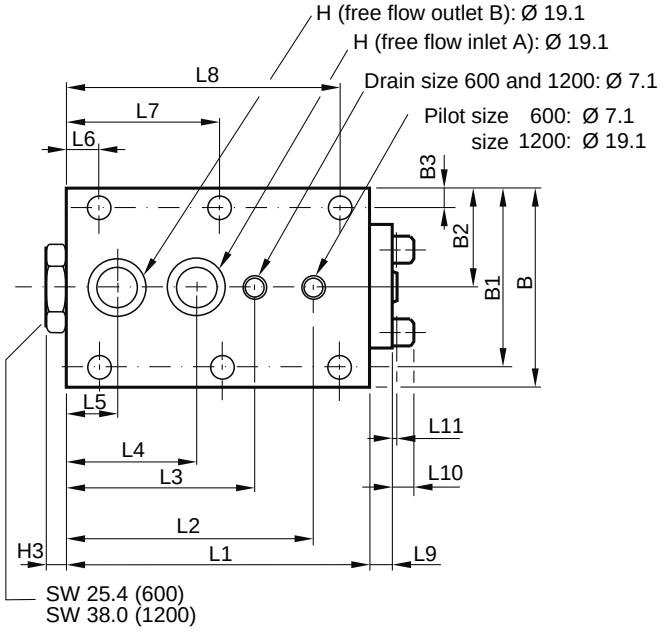

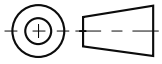

Size	L3	L2	L1	L9	L11	H	H1	H2	H3	L10	L8	L7	L6	B3	B2	B1	B	ØH	L5	L4
CPS600S	76.2	101.6	120.7	10.7	1.0	50.8	25.4	12.7	7.9	–	108.0	60.2	12.7	8.6	38.1	67.3	76.2	11.2	21.3	53.3
CPS1200S	93.7	127.0	152.4	11.4	1.0	63.5	31.8	12.7	10.2	7.9	136.4	76.2	15.7	10.2	50.8	91.2	101.6	19.1	25.4	63.5

CPS UK.INDD CM 16.02.15

Hydraulically pilot operated check valves C4V allow free flow from A to B. The counter-flow direction is blocked.

When pressure is applied to control port X, the ring chamber flow from B to A is released.

Up to four different pilot control ratios are available (see ordering code).

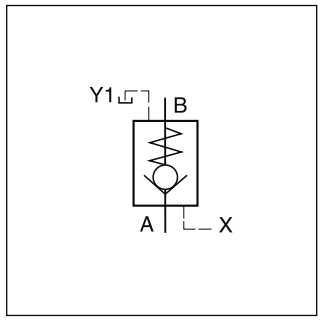

Function

When no pressure is applied to the X-port, the flow from B to A is blocked, because the pressure in B is also in effect on top of the poppet.

Pressurizing the X port relieves the area on top of the poppet to the drain port and allows flow from B to A.

The seat design of the SVL valve series provides leak-free separation of port A and B in the closed position.

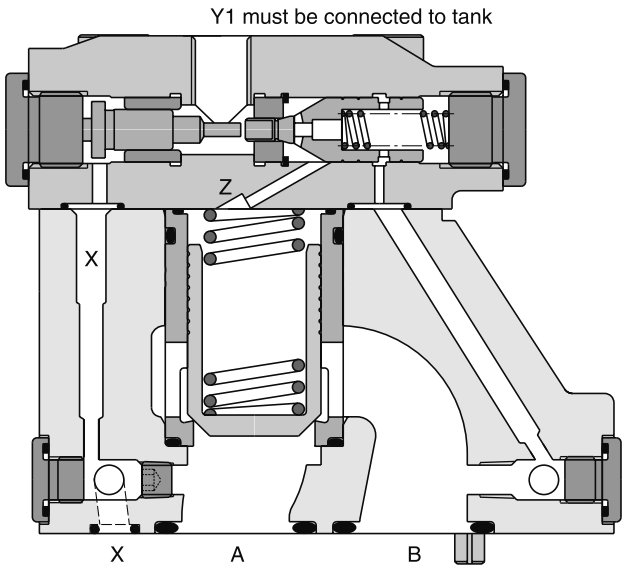

Ordering code

C4V	☐	–	5	9	☐	☐	B	☐	☐
Check valve pilot operated	Nominal size		Max. pressure 350 bar	Y1-port G¼"	Opening ratio	Approx. cracking pressure	Design series	Seal	Options

Code	Nominal size
03	NG10
06	NG25
10	NG32

Code	Opening ratio	Code	Opening ratio
1	1 : 1	E [1)]	1 : 1
3	3 : 1	F [1)]	3 : 1
8	8 : 1	G [1)]	8 : 1
9	10 : 1	H [1)]	10 : 1

Code	Optionen
omit	Standard
013	Position control with protection

Code	Seal
1	NBR
5	FPM

Code	Approx. cracking pressure [bar]			
	Flow A to B		Flow B to A	
	C4V03	C4V06/10	C4V03	C4V06/10
2	1.0	1.0	1.5	1.7
4	4.0	3.5	5.5	6.0
6	2.0	2.2	3.0	3.8

[1)] Position control incl. amplifier for C4V06/10 only.

6

Technical data

General			
Nominal size	**NG10**	**NG25**	**NG32**
Subplate mounting	ISO 5781		
Mounting position	Unrestricted		
Ambient temperature [°C]	-20...+60		
$MTTF_D$ value [years]	150		
Weight [kg]	2.8	4.6	6.1
Hydraulic			
Max. operating pressure [bar]	350		
Nominal flow [l/min]	150	270	450
Fluid	Hydraulic oil according to DIN 51524		
Fluid temperature [°C]	-20...+70 (NBR: -25...+70)		
Viscosity, permitted [cSt] / [mm²/s]	20...400		
Viscosity, recommended [cSt] / [mm²/s]	30...80		
Filtration	ISO 4406 (1999); 18/16/13		

Δp/Q flow curve

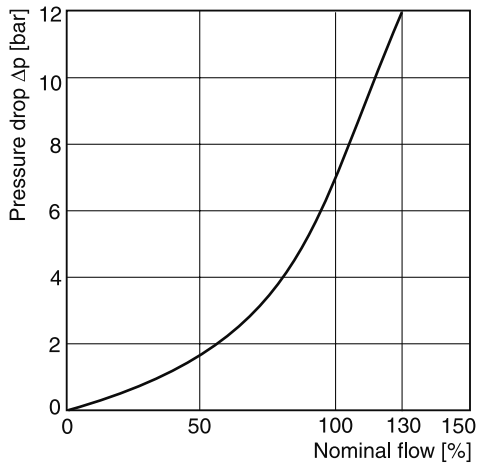

Characteristic curve measured with HLP46 at 50 °C.

6

Position control

Position control by proximity switch with amplifier. The closed position is monitored.

Valve open: proximity switch activated.

This proximity switch is pressure proof and has no wearing parts.

Note: Position control for C4V06 and C4V10 only.

Technical data proximity switch

Function		PNP, contact
Supply voltage (Us)	[VDC]	10...30
Supply voltage ripple	[%]	≤ 10
Current consumption	[mA]	max. 8
Residual voltage L-signal	[V]	Us - 2.2 at Imax
Output current (I)	[mA]	≤ 200
Protection class		IP67
Ambient temperature	[C°]	-25...+70
Wire cross section	[mm²]	3 x 0.5

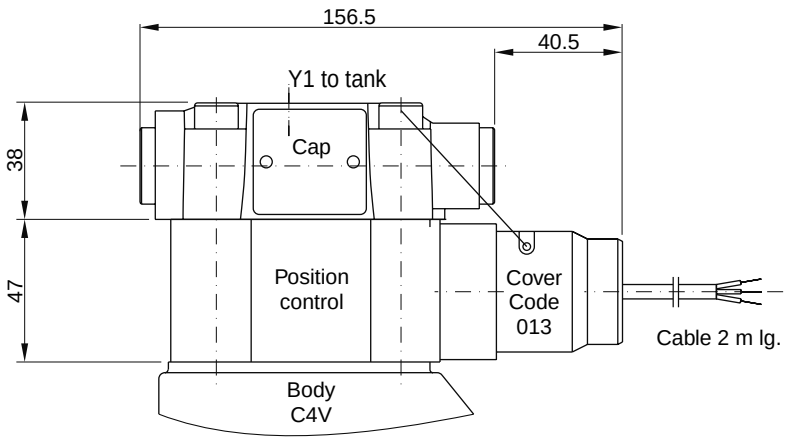

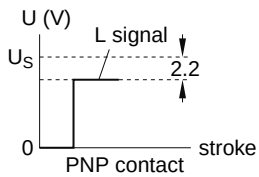

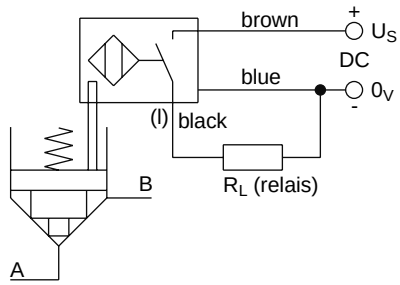

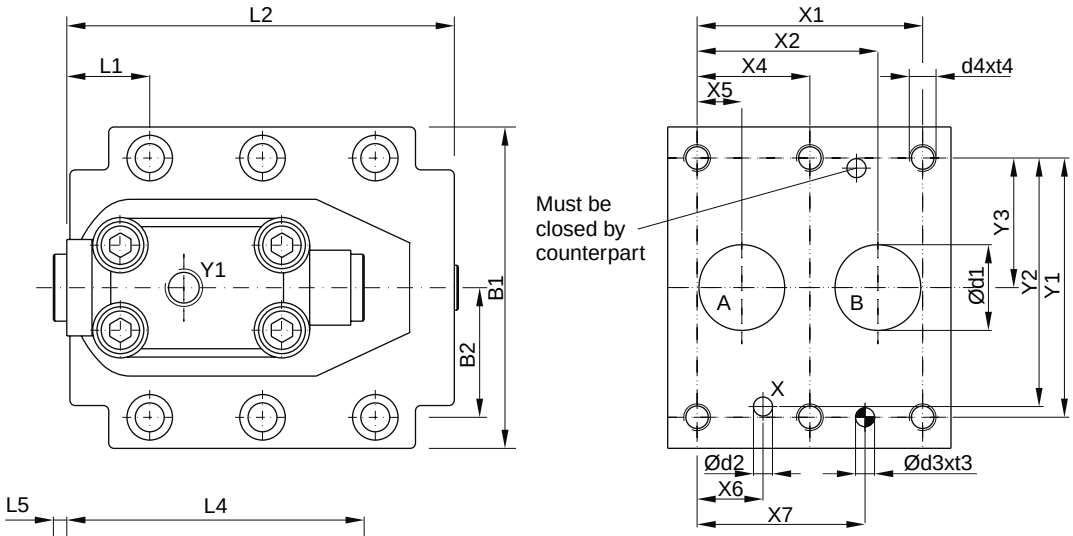

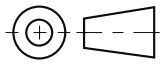

NG	ISO-code	x1	x2	x3	x4	x5	x6	x7	y1	y2	y3	y4	y5	y6
10	5781-06-07-0-00	42.9	35.8	–	–	7.2	21.5	31.8	66.7	58.8	33.4	–	–	–
25	5781-08-10-0-00	60.3	49.2	–	–	11.1	20.6	44.5	79.4	73	39.7	–	–	–
32	5781-10-13-0-00	84.2	67.5	–	42.1	16.7	24.6	62.7	96.8	92.8	48.4	–	–	–

Tolerance for all dimensions ±0.2

NG	ISO-code	B1	B2	H1	H2	H3	H4	H5	H6	L1	L2	L3	L4	L5	L6
10	5781-06-07-0-00	87.3	33.4	83	21	62.5	–	–	–	29.4	95.2	43.7	111	5	–
25	5781-08-0-0-00	105	39.7	107.5	29	87	–	–	–	35.1	127.2	43.7	111	5	–
32	5781-10-13-0-00	120	48.4	120	30	99.5	–	–	–	31	144.7	43.7	111	5	–

NG	ISO-code	d1max	d2max	d3	t3	d4	t4	d5	d6
10	5781-06-07-0-00	15	7	7.1	8	M10	16	10.8	17
25	5781-08-10-0-00	23.4	7.1	7.1	8	M10	18	10.8	17
32	5781-10-13-0-00	32	7.1	7.1	8	M10	20	10.8	17

NG	ISO-code	Bolt kit			Kit		Surface finish
					NBR	FPM	
10	5781-06-07-0-00	BK505	4x M10x35 ISO 4762-12.9	63 Nm ±15 %	S26-58507-0	S26-58507-5	R_{max}6.3 ▱ 0.01/100
25	5781-08-10-0-00	BK485	4x M10x45 ISO 4762-12.9	63 Nm ±15 %	S26-58475-0	S26-58475-5	
32	5781-10-13-0-00	BK506	6x M10x45 ISO 4762-12.9	63 Nm ±15 %	S26-58508-0	S26-58508-5	

C4V pilot oper. UK.INDD CM 16.04.15

Seat valves series D4S are designed for directional control functions. A large variety of poppets, springs and covers – including shuttle valves, stroke limiters, solenoid valves (VV01) and position control – allow to design individual hydraulic solutions for nominal flow up to 600 l/min.

A complete program of 2/2-way seat valves is offered under Parker brand:

subplate mounted valves	series D4S	chapter 6
SAE flange valves	series D5S	chapter 9
slip-in cartridges	series CAR	on request

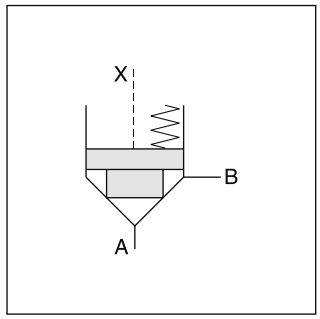

Features

- Subplate mounting according to ISO 5781
- Leak-free seat valve design
- Numerous pilot options
- 6 poppet types
- D4S03 - NG10
  D4S06 - NG25
  D4S10 - NG32

6

D4S10-9DC

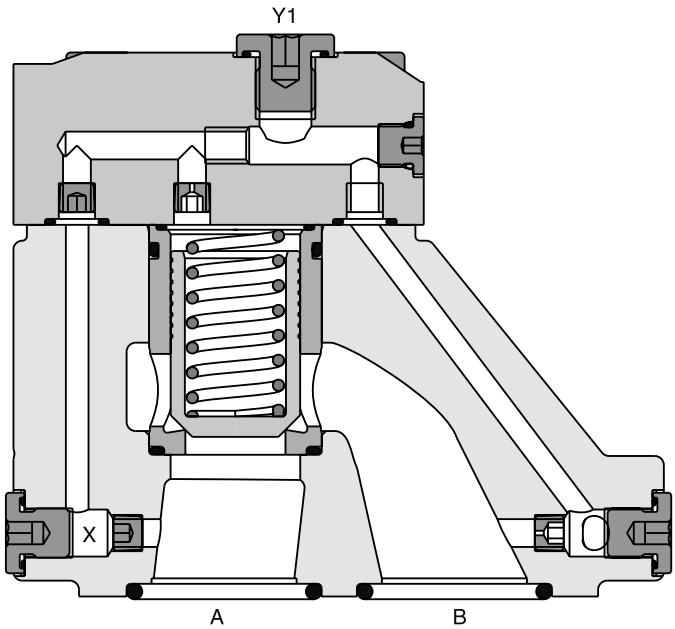

Pilot oil Y = internal from B

D4S	[ ]	–	9	[ ]	[ ]	[ ]	[ ]	[ ]	[ ]	[ ]	B	[ ]	[ ]
Seat valve	Nominal size		Subplate mounting ISO 6264, Y1 port G¼"	Pilot connection	Cap version	Sleeve	Spool type	Spring	Switching type	Solenoid voltage	Design series	Seals	Options

Code	Nominal size
03	NG10
06	NG25
10	NG32

Code	Pilot oil line in body	A-X	B-Y
1	internal from A	⊖	○
2	external from X	●	○
A [1]	internal from A	⊖	●
B	external from X	●	●
C	internal from A + B	⊖	⊖
D	internal from B	●	⊖
G	external from Y	●	●

Code	Ports	X	Y	Z	X-Y	Y1	VV01
	Standard						
1	Pilot oil = pilot drain	○	●	⊖	○	●	—
C	Pilot oil = pilot drain	●	○	⊖	○	●	—
	With solenoid valve (VV01)						
2	Ext. PD from cap	○	○	⊖	●	○	●
5	Ext. to subplate	○	○	⊖	●	●	○
6	Internal pilot drain	○	○	⊖	●	●	○
	With stroke limiter (not for D4S03)						
3	Pilot oil = pilot drain	⊖	●	—	—	—	—
4	Pilot oil = pilot drain	●	⊖	—	—	—	—

○ open bore ● closed bore ⊖ orifice Ø 1.2

Code	Sleeve
1	AA = 95 %, AB = 5 %
3	AA = 60 %, AB = 40 %

Code	Size	Poppet type	Sleeve
1	03, 06,10	With closed bottom and 15° chamfer (pZ max. = pA +20 bar)	1
2	03	With 0.8 dia. orifice at the bottom and 15° chamfer	1
	06, 10	With 1.2 dia. orifice at the bottom and 15° chamfer	1
4	03, 06,10	With closed bottom and 45° chamfer	1, 3
A [2]	06, 10	Safety spool (for position control only)	3
B [2]	06, 10	Throttle spool, 10° chamfer	3
C [2]	06, 10	Throttle spool, 3° chamfer	3

Code	Spring (approx. cracking pressure [bar])					
	Sleeve Code 1		Sleeve Code 3			
	A → B		A → B		B → A	
	D5S03	D5S06/10	D5S03	D5S06/10	D5S03	D5S06/10
1	2.8	3.5	6.5	6.5	9.5	11.0
2	0.5	0.5	1.0	1.0	1.5	1.7
3	0.3	0.3	0.6	0.6	0.9	1.0
4	2.2	2.2	4.0	3.5	5.5	6.0
5	—	9.0	—	16.0	—	28.0
6	1.2	1.2	2.0	2.2	3.0	3.8
7	3.0	—	8.0	—	12.0	—

Code	Switching type	
omit	Standard w/o vent function	
09	VV01 with manual override	de-energized: power comp. open
10	VV01 without manual override	
11	VV01 with manual override	de-energized: power comp. closed
12	VV01 without manual override	
CA	Shuttle valve	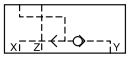
DA	Shuttle valve	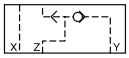
CB	VV01 code 09 and shuttle valve code CA	
CD	VV01 code 11 and shuttle valve code CA	
DB	VV01 code 09 and shuttle valve code DA	
DD	VV01 code 11 and shuttle valve code DA	
BH	VV01 code 10 and shuttle valve code CA and position control [3] with amplifier	
BK	VV01 code 12 and shuttle valve code CA and position control [3] with amplifier	
BN	VV01 code 10 and shuttle valve code DA and position control [3] with amplifier	
BQ	VV01 code 12 and shuttle valve code DA and position control [3] with amplifier	
BC	VV01 code 10 and position control [3] with amplifier	
BE	VV01 code 12 and position control [3] with amplifier	
BA	Position control [3] with amplifier	
BF	Position control [3] with amplifier and shuttle valve code CA	
BL	Position control [3] with amplifier and shuttle valve code DA	

Code	Options
omit	Standard
013	Cover for end position control

Code	Seals
1	NBR
5	FPM

Code	Solenoid voltage
omit	Standard w/o vent function
G0R	12 V=
G0Q	24 V=
GAR [4]	98 V=
GAG [4]	205 V=
W30	110 V / 50 Hz 120 V / 60 Hz
W31	230 V / 50 Hz 240 V / 60 Hz

[1] With VV01 only.

[2] Springs 2, 3 and 6 only.

[3] Position control for D4S06/10 only. Spring 2 or 4. Spool A and sleeve 3. Valve open: proximity switch damped.

[4] To be used in combination with rectifier plugs at 120 VAC/230 VAC power supply.

Examples see end of chapter

General							
Size			**NG10**		**NG25**		**NG32**
Mounting interface			Subplate mounting according to ISO 6264				
Mounting position			unrestricted				
Ambient temperature		[°C]	-20...+60				
$MTTF_D$ value		[years]	150				
Weight		[kg]	2.7		4.5		6.0
Hydraulic							
Operating pressure		[bar]	Ports A, B up to 350; Port Y 140 (with VV01)				
Nominal flow		[l/min]	180		360		600
Fluid			Hydraulic oil according to DIN 51524				
Fluid temperature		[°C]	-20...+70 (NBR: -25...+70)				
Viscosity,	permitted	[cSt] / [mm^2/s]	20...400				
	recommended	[cSt] / [mm^2/s]	30...80				
Filtration			ISO 4406 (1999); 18/16/13				
Electrical (solenoid)							
Duty ratio			100 % ED; CAUTION: coil temperature up to 150 °C possible				
Protection class			IP65 in accordance with EN 60529 (with correctly mounted plug-in connector)				
Code			G0R	G0Q	GAR	GAG	W30	W31
Supply voltage		[V]	12 V =	24 V =	98 V =	205 V =	110 at 50 Hz 120 at 60 Hz	230 at 50 Hz 240 at 60 Hz
Tolerance supply voltage		[%]	±10	±10	±10	±10	±5	±5
Current consumption	hold	[A]	2.72	1.29	0.33	0.13	0.6 / 0.55	0.3 / 0.27
	in rush	[A]	2.72	1.29	0.33	0.13	2.5 / 2.4	1.25 / 1.2
Power consumption	hold	[W]	32.7	31	31.9	28.2	70 / 70 VA	70 / 70 VA
	in rush	[W]	32.7	31	31.9	28.2	280 / 290 VA	280 / 290 VA
Solenoid connection			Connector as per EN175301-803, solenoid identification as per ISO 9461					
Wiring min.		[mm^2]	3 x 1.5 recommended					
Wiring length max.		[m]	50 recommended					

6

D4S pilot configuration

D4S direct operated	**D4S with vent valve VV01**	**VV01**
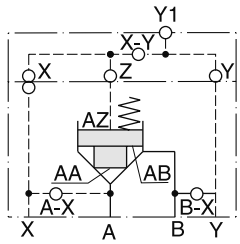	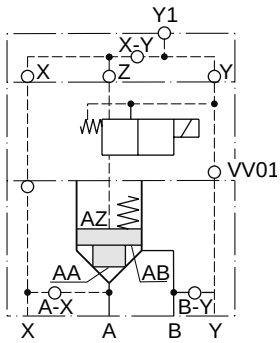	de-energized open 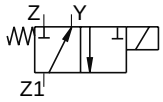 de-energized closed 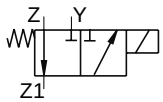

Δp/Q performance curves

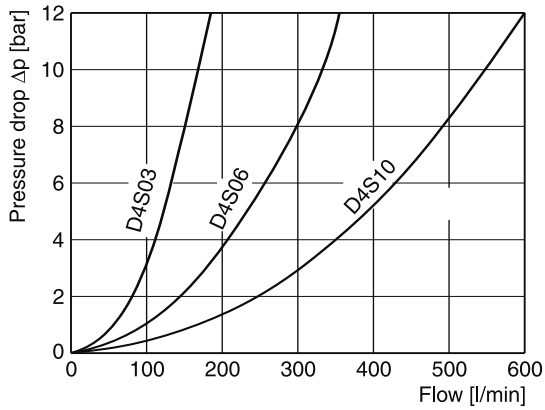

Leakage

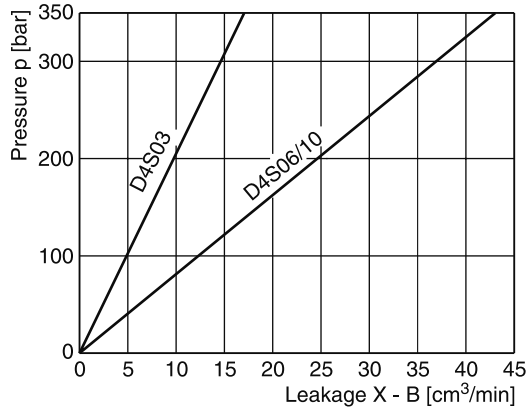

All characteristic curves measured with HLP46 at 50 °C.

Selection of Cartridges

Sleeve 1, poppet 1	Sleeve 1, poppet 2	Sleeve 1, poppet 4	Sleeve 3, poppet 4	Sleeve 3, poppet A	Sleeve 3, poppet B/C
Z 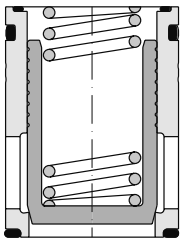 B A	Z 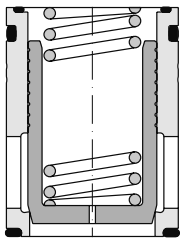 B A	Z 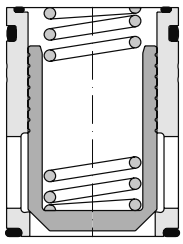 B A	Z 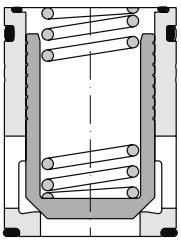 B A	Z 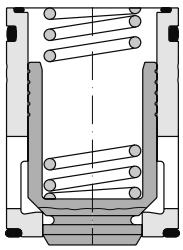 B A	Z 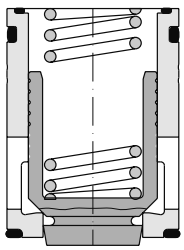 B A
1 : 1.05 $A_A = 0.95\ A_C$ $A_B = 0.05\ A_C$ 15° chamfer	1 : 1.05 $A_A = 0.95\ A_C$ $A_B = 0.05\ A_C$ 15° chamfer orifice	1 : 1.05 $A_A = 0.95\ A_C$ $A_B = 0.05\ A_C$ 45° chamfer	1 : 1.67 $A_A = 0.6\ A_C$ $A_B = 0.4\ A_C$ 45° chamfer	1 : 1.67 $A_A = 0.6\ A_C$ $A_B = 0.4\ A_C$ 45° chamfer safety spool	1 : 1.67 $A_A = 0.6\ A_C$ $A_B = 0.4\ A_C$ 45° chamfer throttle spool

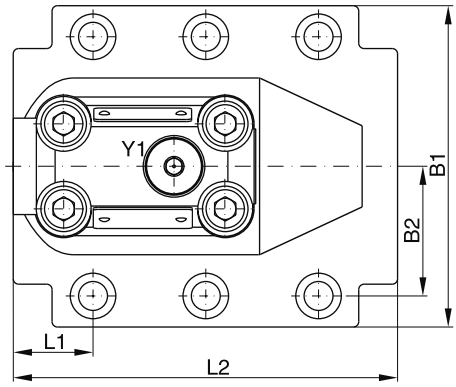

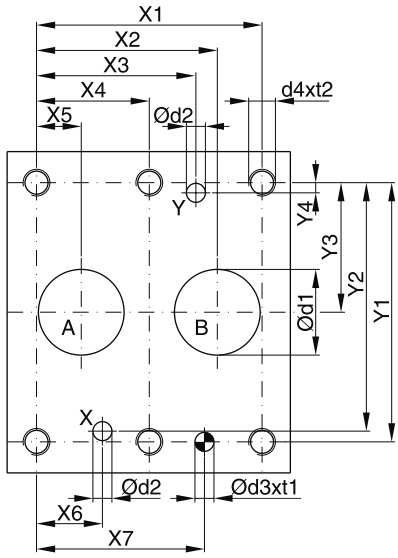

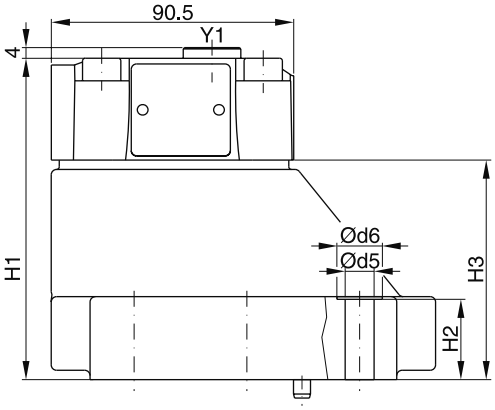

6

NG	ISO-code	X1	X2	X3	X4	X5	X6	X7	Y1	Y2	Y3	Y4
10	6264-06-09-*-97	42.9	35.8	21.5	–	7.2	21.5	31.8	66.7	58.8	33.4	7.9
25	6264-08-13-*-97	60.3	49.2	39.7	–	11.1	20.6	44.5	79.4	73	39.7	6.4
32	6264-10-17-*-97	84.2	67.5	59.5	42.1	16.7	24.6	62.7	96.8	92.8	48.4	3.8

NG	ISO-code	B1	B2	H1	H2	H3	L1	L2	D1	D2	D3	t1	D4	t2	D5	D6
10	6264-06-09-*-97	87.3	33.35	83	21	45	29	94.8	15	7	7.1	8	M10	16	10.8	17
25	6264-08-13-*-97	105	39.7	107.5	29	69.5	34.7	126.8	23.4	7.1	7.1	8	M10	18	10.8	17
32	6264-10-17-*-97	120	48.4	120	30	82	30.6	144.3	32	7.1	7.1	8	M10	20	10.8	17

NG	ISO-code	Bolt kit			Kit		Surface finish
					NBR	FPM	
10	6264-06-07-*-97	BK505	4x M10x35 ISO 4762-12.9	63 Nm ±15 %	S26-58507-0	S26-58507-5	R_{max}6.3 ▱ 0.01/100
25	6264-08-11-*-97	BK485	4x M10x45 ISO 4762-12.9	63 Nm ±15 %	S26-58475-0	S26-58475-5	
32	6264-10-15-*-97	BK506	6x M10x45 ISO 4762-12.9	63 Nm ±15 %	S26-58508-0	S26-58508-5	

D4S UK.INDD CM 16.04.15

Dimensions D4S with VV01

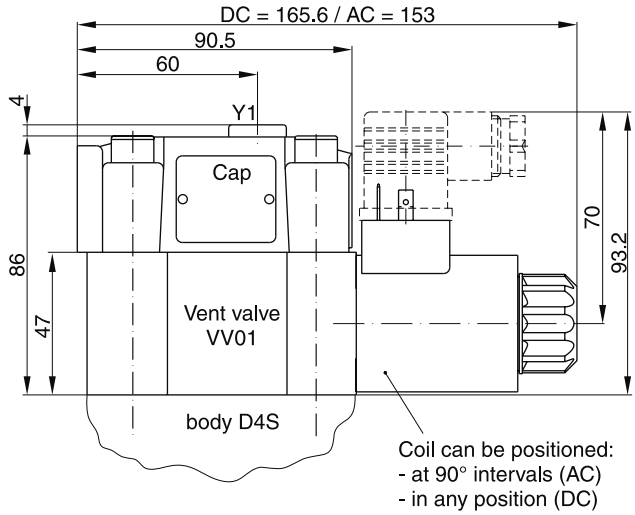

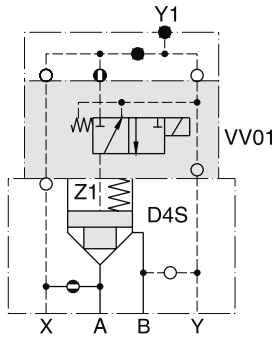

with manual override | without manual override

D4S..-.....09/10
Solenoid energized:
D4S blocked
Solenoid de-energized:
Flow from A-B or B-A

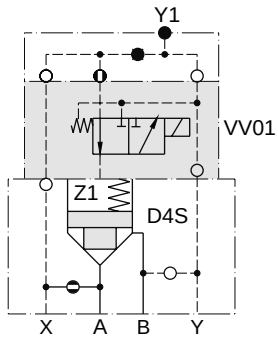

with manual override | without manual override

D4S..-.....11/12
Solenoid energized:
Flow from A-B or B-A
Solenoid de-energized:
D4S blocked

6

Dimensions D4S with shuttle valve

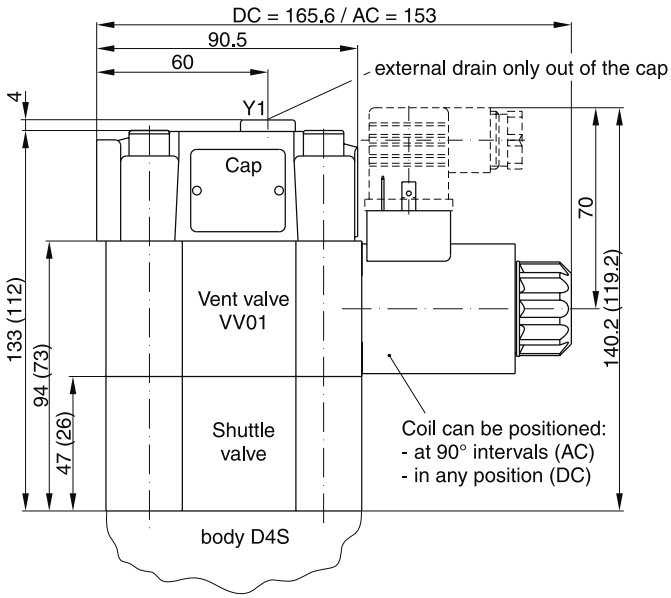

() Dimensions in brackets are for version VV01with shuttle valve code DB or DD.

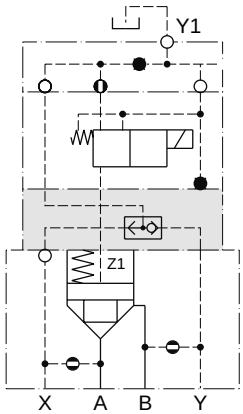

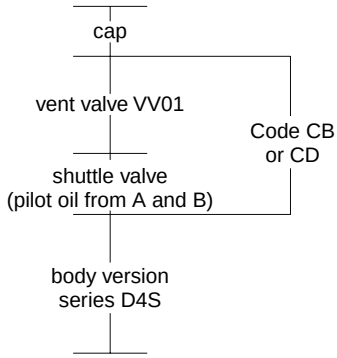

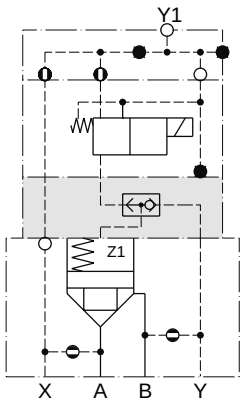

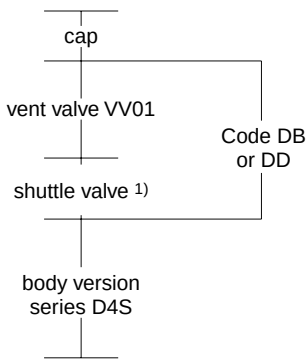

1) Pilot oil from A and B, from B to A check valve function.

Dimensions D4S position control

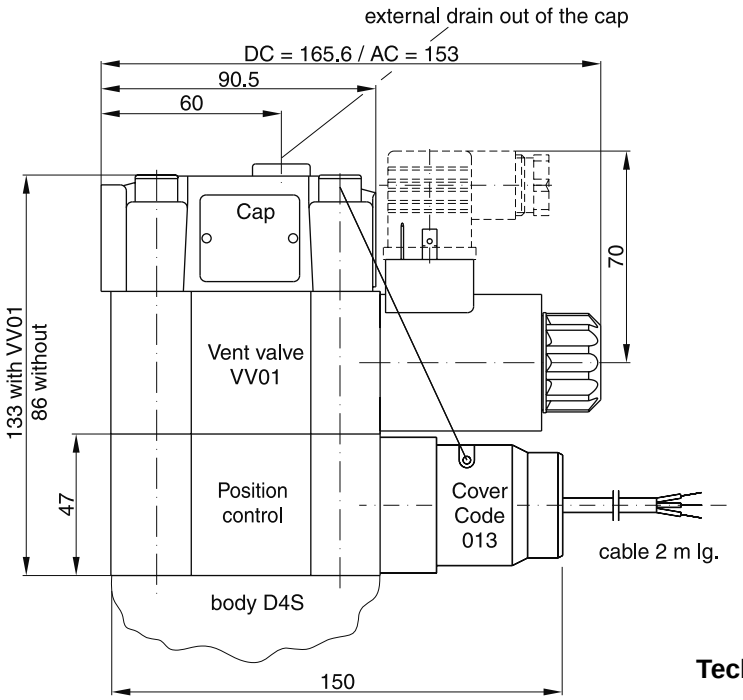

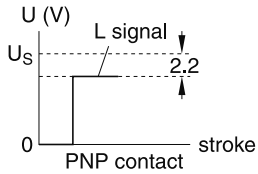

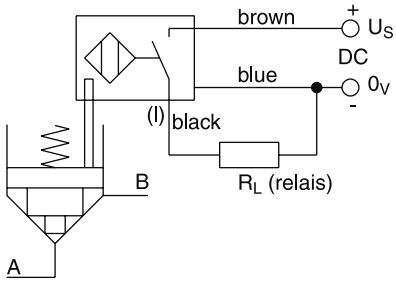

6

Position control by proximity switch (incl. amplifier)

Valve open: proximity switch activated.

This proximity switch is pressure proof and has no wearing parts.

Note

Position control for D4S06 and D4S10 only.

Technical data (proximity switch)

Function		PNP, contact
Supply voltage (Us)	[VDC]	10...30
Supply voltage ripple	[%]	≤ 10
Current consumption	[mA]	max. 8
Residual voltage L-signal	[V]	Us - 2.2 at I_{max}
Output current (I)	[mA]	≤ 200
Protection class		IP67
Ambient temperature	[C°]	-25...+70
Wire cross section	[mm²]	3 x 0.5

Dimensions D4S stroke limiter

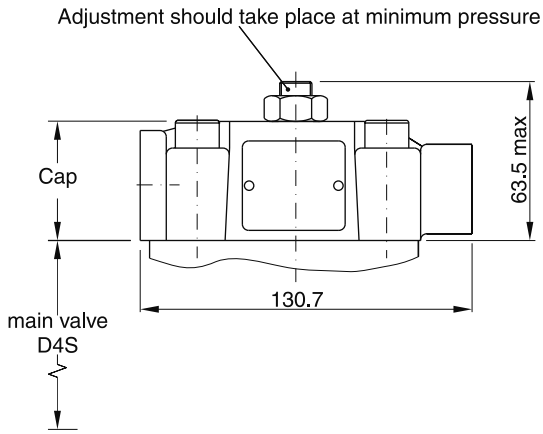

Example: D4S$^{06}_{10}$-.233B.

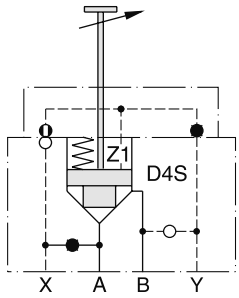

Note:

Stroke limiter not for use with D4S03, vent valve VV01, shuttle valve and positon control.

D4S direct operated

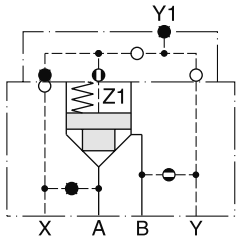

D4S..-.DC
Pilot oil Y = internal from B

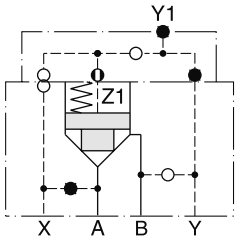

D4S..-.21
Pilot oil X = external

D4S with VV01

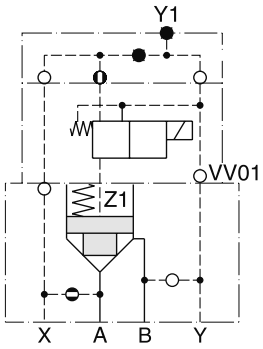

D4S..-.16... 09, 10, 11, 12 } with VV01
Pilot oil X = internal from A
Drain Y = internal to B

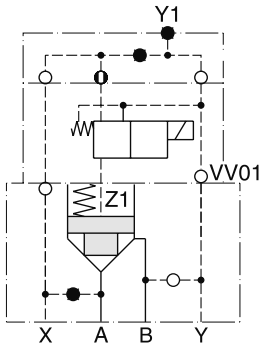

D4S..-.26... 09, 10, 11, 12 } with VV01
Pilot oil X = external
Drain Y = internal to B

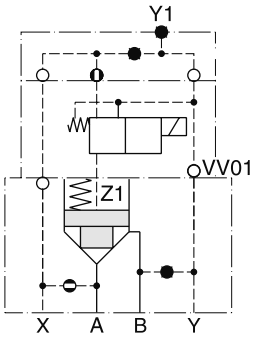

D4S..-.A5... 09, 10, 11, 12 } with VV01
Pilot oil X = internal from A
Drain Y = external to subplate

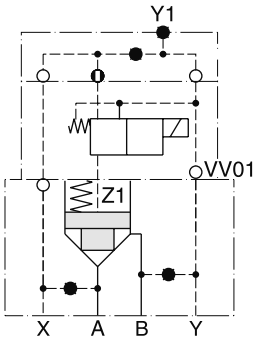

D4S..-.B5... 09, 10, 11, 12 } with VV01
Pilot oil X = external
Drain Y = external to subplate

D4S with VV01

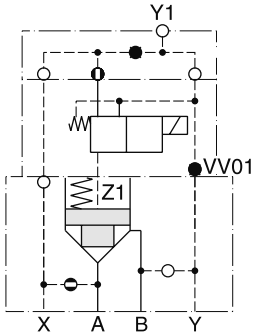

D4S..-.12... 09, 10, 11, 12 } with VV01

Pilot oil X = internal from A
Drain Y1 = external out of the cap

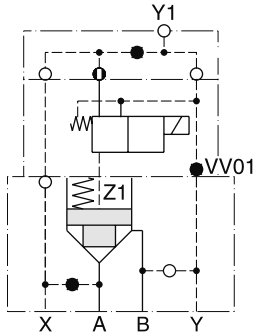

D4S..-.22... 09, 10, 11, 12 } with VV01

Pilot oil X = external
Drain Y1 = external out of the cap

D4S with shuttle valve

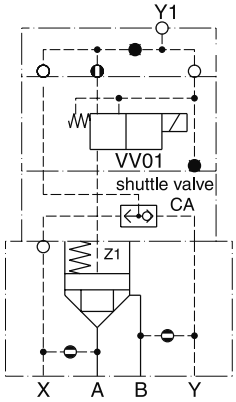

D4S..-.C2... CB, CD } with shuttle valve CA and VV01

Pilot oil = internal from A and B
Drain Y1 = external out of the cap

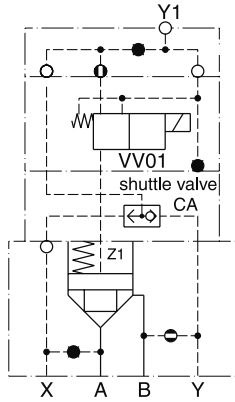

D4S..-.D2... CB, CD } with shuttle valve CA and VV01

Pilot oil = internal from B and
external from X
Drain Y1 = external out of the cap

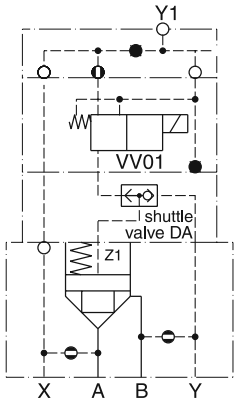

D4S..-.C2-...- DB, DD } with shuttle valve DA and VV01

Pilot oil = internal from A and B
(B-A = check valve function)
Drain Y1 = external out of the cap

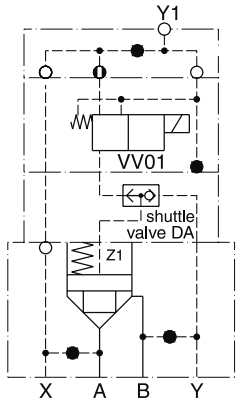

D4S..-.B2... DB, DD } with shuttle valve DA and VV01

Pilot oil = external from X and Y
Drain Y1 = external out of the cap

D4S with position control

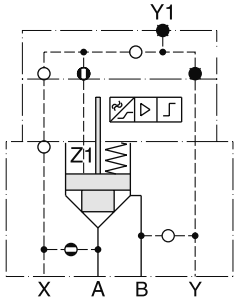

D4S..-.113A.BA
(with position control)

Pilot oil X = internal from A

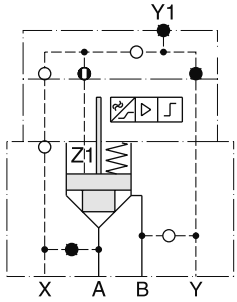

D4S..-.213A.BA
(with position control)

Pilot oil X = external

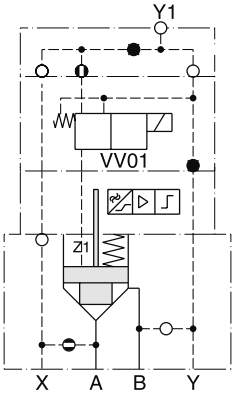

D4S..-.123A. BC / BE } with position control and VV01

Pilot oil X = internal from A
Drain Y1 = external out of the cap

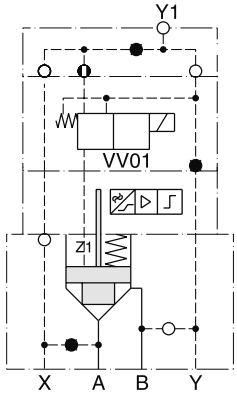

D4S..-.223A. BC / BE } with position control and VV01

Pilot oil X = external
Drain Y1 = external out of the cap

D4S with stroke limiter

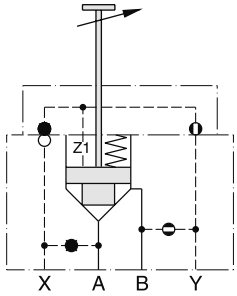

D4S..-.D434. with stroke limiter
Pilot oil Y = internal from B

Note: for D4S06 and D4S10 only

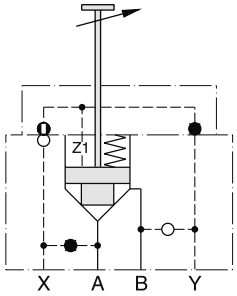

D4S..-.233B. with stroke limiter
Pilot oil X = external

Note: for D4S06 and D4S10 only

Description	Threaded cable joint	Body colour coding	Order no.
Plug EN 175301-803, design type AF, protection class IP 65 Voltages up to 250 V	PG 9	black, B	**5001710**
		grey, A	**5001711**
	PG11	black, B	**5001716**
		grey, A	**5001717**

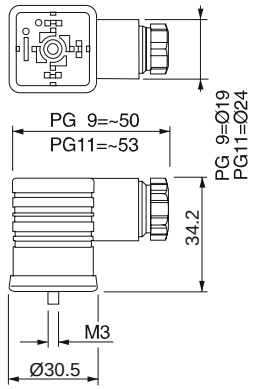

6

For other plugs see chapter 2, "Accessories"

Series	Description	Size				Page
	DIN / ISO	06	10	16	25	
	DC valve					
Z1DW	Shut-off valve					7-2
	Pressure relief valves, manual operation					
RDM	Direct operated	•	•			7-9
RM	Pilot operated			•	•	7-13
ZDV	Pilot operated, high performance	•	•			7-18
	Pressure reducing valves, manual operation					
PRDM	Direct operated, 3-way	•	•			7-22
PRM	Pilot operated, 2-way			•	•	7-27
ZDR	Pilot operated, 2-way, high performance	•	•			7-32
	Pressure reducing valves, proportional operation					
PRPM	Pilot operated, 3-way	•	•			7-36
	Pressure compensators					
LCM	2-way pressure compensator	•	•			7-40
SPC	2-way pressure compensator	•	•	•	•	7-41
SPC	3-way pressure compensator	•	•	•	•	7-41
	Throttle check valves					
FM		•	•	•	•	7-47
ZRD	High performance	•	•			7-55
	Check valves					
CM		•	•			7-59
ZRV		•	•			7-65
	Check valves, pilot operated					
CPOM		•	•	•	•	7-69
ZRE	High performance	•	•			7-74
	Counterbalance valves					
ZNS	Pilot operated	•	•			7-77
	Information					
	Mounting patterns, general information					7-81

Further sandwich valves are presented in chapter 8
„slip-in cartridge valves“, see „accessories, pilot valves“

Direct operated, spool-type sandwich DC valves series Z1DW size NG06 are used for shutting off the flow in stack systems.

For shut off secondary ports A and B, body version A is applied. P and T are drilled through.

For applications with port B drained in a switching position to tank, body version B is used. P and A are drilled through.

Valves are sealed to the manifold side.

The valves can be ordered with inductive position control optionally.

Attention:
The adjustment of the position control is factory set and sealed. Replacement and repairs can only be undertaken by the manufacturer.

Technical Features
- Shut-off sandwich valve NG06
- Inductive position control optional

Z1DW*E standard

Z1DW*E ind. position control

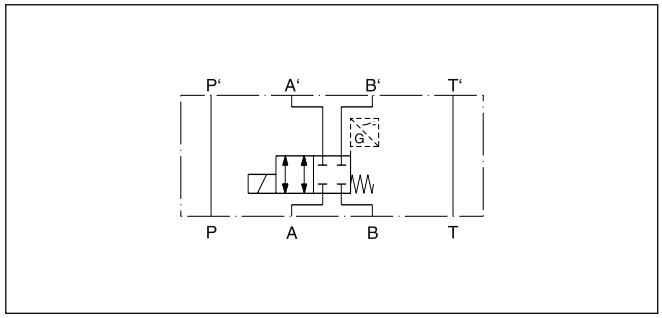

Z1DWA02E

Z1DW*E without inductive position control

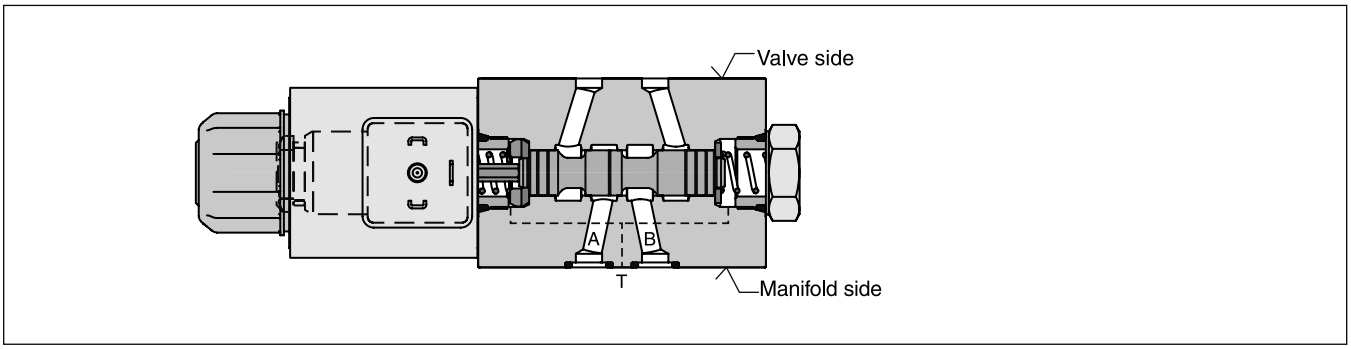

Z1DW*E with inductive position control

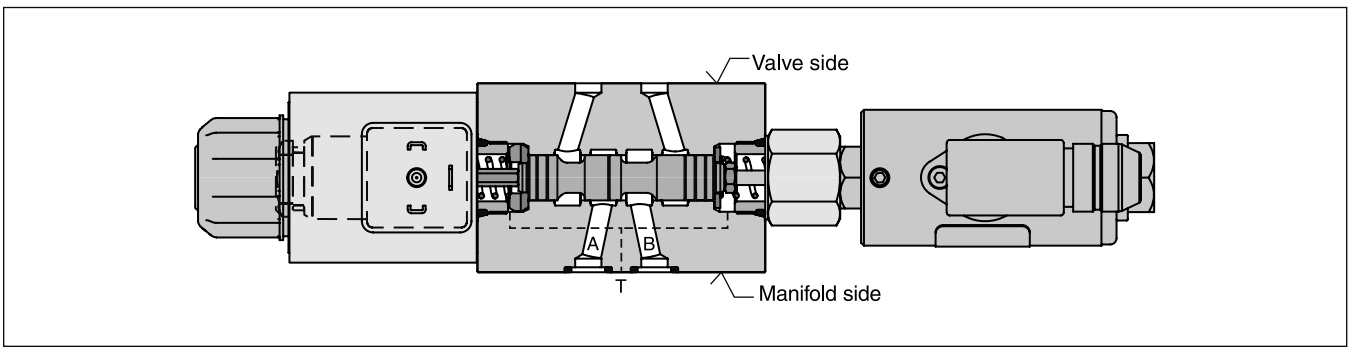

General					
Design		Directional spool valve, sandwich type			
Actuation		Solenoid			
Size		DIN NG06 / CETOP 03 / NFPA D03			
Mounting interface		DIN 24340 A6 / ISO 4401 / CETOP RP 121-H / NFPA D03			
Mounting position		unrestricted, preferably horizontal			
Ambient temperature	[°C]	0...+60			
$MTTF_D$ value	[years]	150			
Weight	[kg] [kg]	1.8 (1 solenoid), 2.3 (2 solenoids) w/o position control 2 with position control			
Hydraulic					
Max. operating pressure	[bar]	P, A B: 350 ; T: 210			
Fluid		Hydraulic oil in accordance with DIN 51524			
Fluid temperature	[°C]	-20…+70 (NBR: -25…+70)			
Viscosity, permitted	[cSt] / [mm²/s]	20...400			
recommended	[cSt] / [mm²/s]	30...80			
Filtration		ISO 4406 (1999); 18/16/13			
Flow max.	[l/min]	50			
Leakage at 50 bar	[ml/min]	Up to 10 per flow path, depending on spool			
Static / Dynamic					
Step response at 95 %	[ms]	Energized: 32 ; De-energized: 40			
Electrical characteristics					
Duty ratio		100 % ED; CAUTION: coil temperature up to 150 °C possible			
Max. switching frequency	[1/h]	15000			
Protection class		IP 65 in accordance with EN 60529 (with correctly mounted plug-in connector)			
	Code	K	J	U	G
Supply voltage	[V]	12 V =	24 V =	98 V =	205 V =
Tolerance supply voltage	[%]	±10	±10	±10	±10
Current consumption	[A]	2.72	1.29	0.33	0.13
Power consumption	[W]	32.7	31	31.9	28.2
Solenoid connection		Connector as per EN 175301-803, solenoid identification as per ISO 9461.			
Wiring min.	[mm²]	3 x 1.5 recommended			
Wiring length max.	[m]	50 recommended			

With electrical connections the protective conductor (PE ⏚) must be connected according to the relevant regulations.

Ordering Code

Series Z1DW

Z	1	D	W						W			
Sandwich plate, Shut-off valve	**Size DIN NG06 CETOP 03 NFPA D03**		**Wet pin solenoid**	**Body**	**Spool type**	**Spool position**	**Seals**	**Solenoid voltage**	**Connector as per EN 175301-803, without plug** (please order plug separately)	**Manual override option**	**Position control**	**Design series** (not required for ordering)

Code	Code	Code	
A	01	C [1]	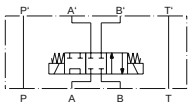
A	01	E	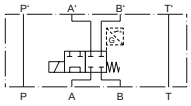
A	01	K	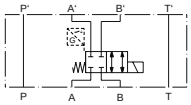
A	02	C [1]	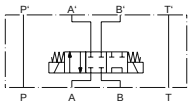
A	02	E	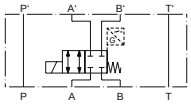
A	02	K	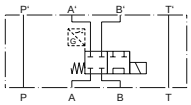
B	37	B	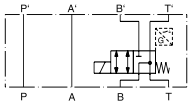

Code	Position control	Spool position
omit	Standard	C, E, B, K
I2N	End position monitored side B	E, B (Solenoid on a-side)
I5N [3]	Start position monitored side B	
I1N	End position monitored side A	K (Solenoid on b-side)
I4N [3]	Start position monitored side A	

Code	Manual override
omit	Standard valve with manual override
T [3]	without manual override

Code	Voltage
K	12 V =
J	24 V =
U [2]	98 V =
G [2]	205 V =

Code	Seals
N	NBR
V	FPM

7

Further spool types and voltages on request.

[1] Without position control.
[2] To be used in combination with rectifier plugs at 120 VAC / 230 VAC power supply.
[3] For hydraulic presses according to the safety regulations EN 693, manual override code “T” (without manual override) and position control “I4N” or “I5N” (start position monitored) are required.

Electrical characteristics of position control as per IEC 61076-2-101 (M12x1)

Protection class		IP65 in accordance with EN 60529 (with correctly mounted plug-in connector)
Ambient temperature	[°C]	0...+50
Supply voltage Us / ripple	[V]	18...42 / 10 %
Current consumption without load	[mA]	≤ 30
Max. output current per channel, ohmic	[mA]	400
Min. output load per channel, ohmic	[kOhm]	100
Max. output drop at 0.2 A	[V]	≤ 1.1
Max. output drop at 0.4 A	[V]	≤ 1.6
EMC		EN50081-1 / EN50082-2
Max. tolerance ambient field strength	[A/m]	<1200
Min. distance to next AC solenoid	[m]	>0.1
Interface		M12x1 acc. to IEC 61076-2-101
Wiring min.	[mm²]	5 x 0.25 brad shield recommended
Wiring length max.	[m]	50 recommended

M12 pin assignment

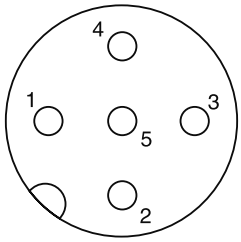

1 Us 18...42 V
2 Out B: normally open
3 0 V
4 Out A: normally closed
5 Earth ground

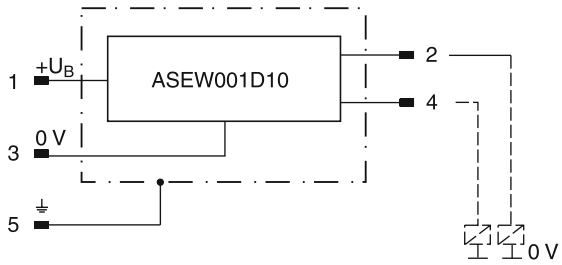

Definitions

Start position monitored:

The valve is de-energized. The inductive switch gives a signal at the moment when the spool leaves the spring offset position (below 25 % spool stroke).
At the switching point the spool is located within the closed position. It is secured that only the flow paths of the offset position are granted.

End position monitored:

The inductive switch gives a signal before the end position is reached (above 75 % spool stroke).

The switch can only be located on the opposite side of the solenoid for direct operated valves.
Please order plug M12 x 1 separately (see accessories, plug M12x1; order no.: 5004109).

The flow curve diagram shows the flow versus pressure drop curves for all spool types. The relevant curve number for each spool type, operating position and flow direction is given in the table below.

Spool	Symbol	A-A'	A'-A	B-B'	B'-B	T-T'	T-T' Start position	T-T' End position	P-P'	B-T
A02E	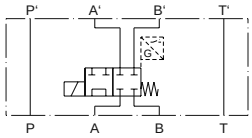	5	5	5	5	1	—	—	1	—
A01K	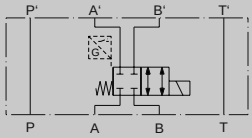	5	5	5	5	1	—	—	1	—
B37B	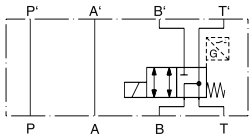	2	2	4	4	—	3	1	1	6

Flow curves

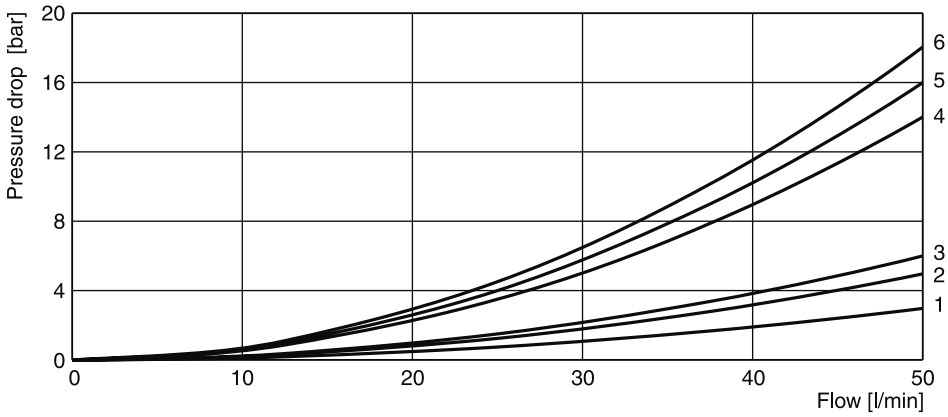

Shift limits

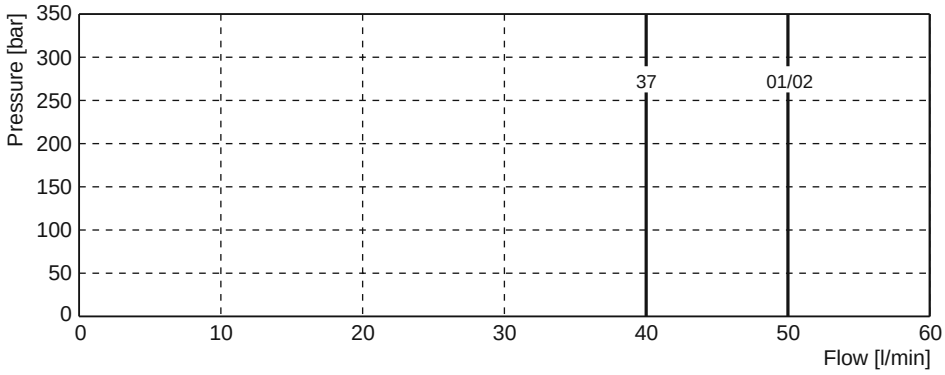

Measured with HLP46 at 50 °C, 90 % U_{nom} and warm solenoids.

Z1DW Standard
B, E -style

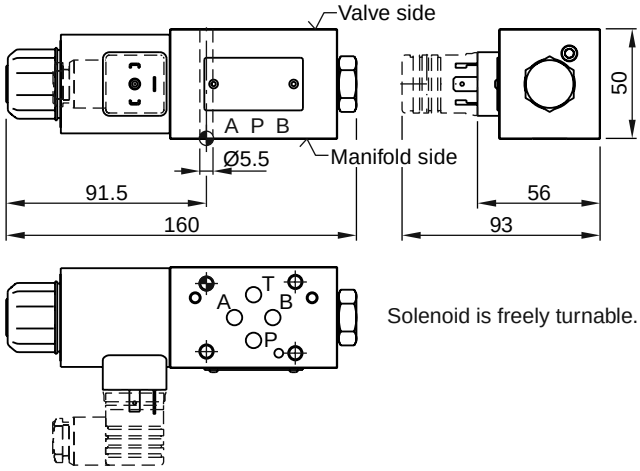

K -style

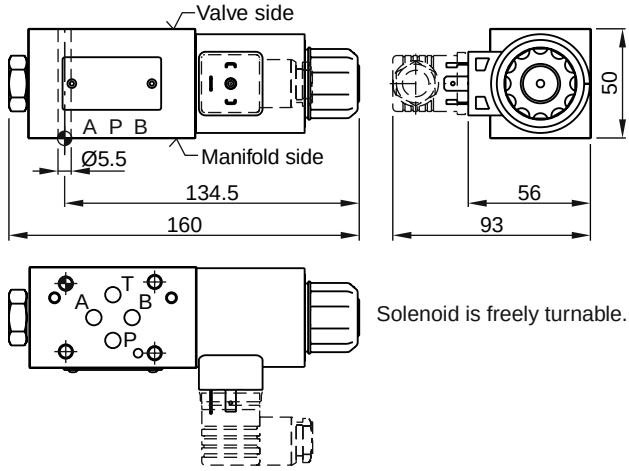

C -style

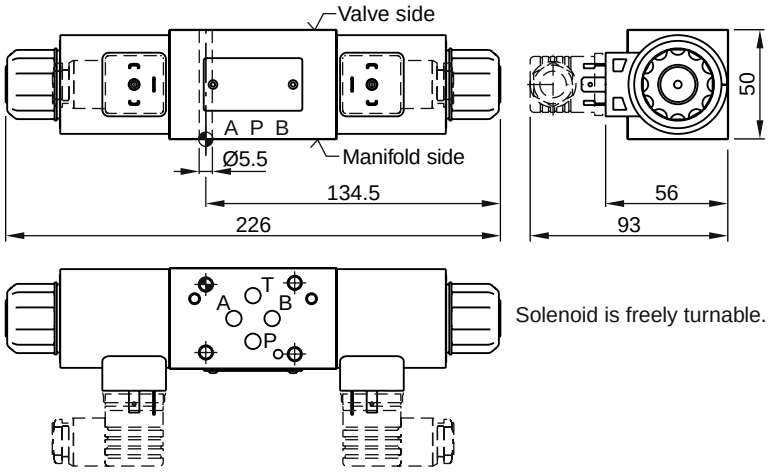

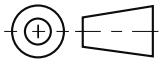

Surface finish		Kit
R_{max}6.3 ▱ 0.01/100	7.6 Nm ±15 %	**NBR: SK-D1VW-N91** FPM: SK-D1VW-V91

The space necessary to remove the plug per EN 175301-803, design type AF is at least 15 mm.
The torque for the screw M3 of the plug has to be 0.5 to 0.6 Nm.

Z1DW UK.indd CM 30.03.2015

Z1DW with inductive position control
Interface EN 175301-803, DC solenoid, without plug M12x1 [1)]

B, E -style

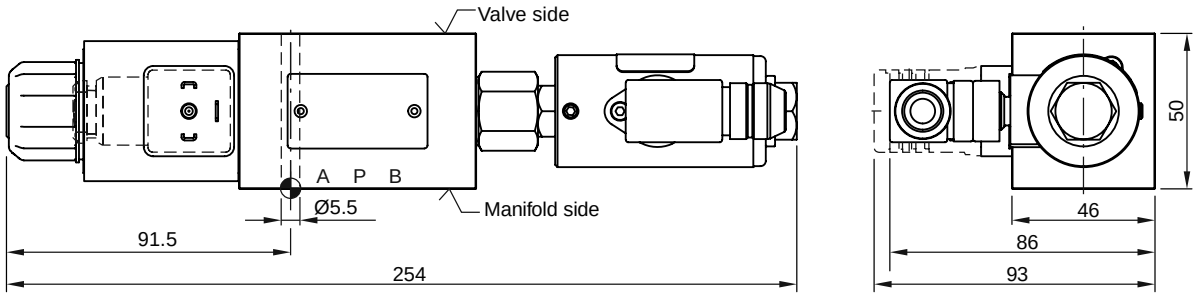

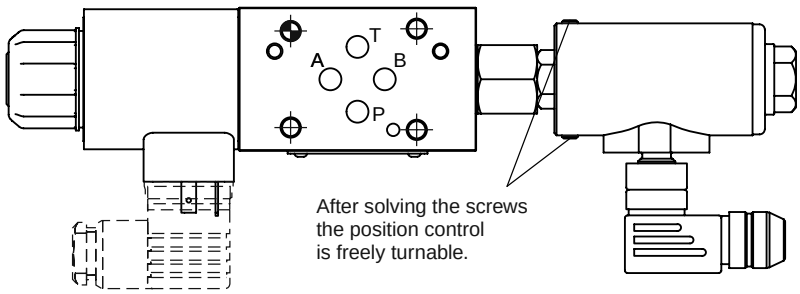

Solenoid and position control
are freely turnable.

K -style

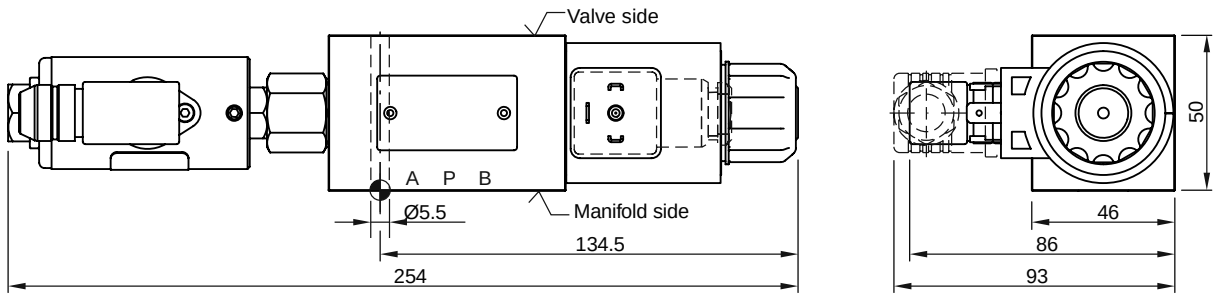

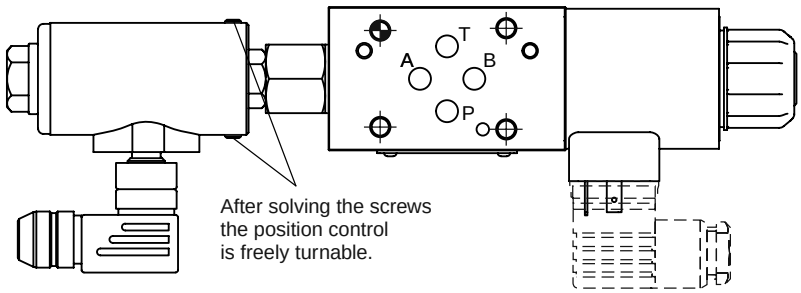

Solenoid and position control
are freely turnable.

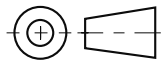

Surface finish		Kit
R_{max}6.3 ▱ 0.01/100	7.6 Nm ±15 %	**NBR: SK-D1VW-N91** FPM: SK-D1VW-V91

The space necessary to remove the plug per EN 175301-803, design type AF is at least 15 mm.

The torque for the screw M3 of the plug has to be 0.5 to 0.6 Nm.

Attention: The adjustment of the position control is factory set and sealed. Replacement and repairs can only be undertaken by the manufacturer.

[1)] Please order plug M12 x 1 separately (see accessories, plug M12x1; order no.: 5004109).

The direct operated pressure relief valves series RDM are in sandwich design for easy configuration of stock systems.
They relief the pressure of the hydraulic system to the adjusted value.

RDM2

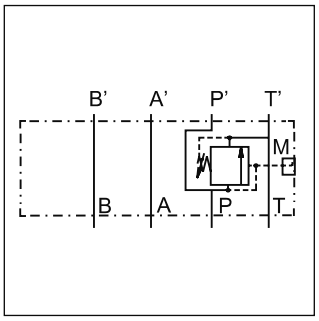

Example PT

Function

PT... pressure is relieved from P to T.
TT... pressure pre-loading in T.

Features

- The direct operated, cushioned piston design results in fast response, low leakage and minimal hysteresis.
- Pressure settings:
  bar 25, 64, 160, 210, 350 for RDM2,
  bar 19, 50, 100, 150, 210 for RDM3.
- Adjustment modes:
  - Hexagon socket
  - Cylinder lock
  - Turning knob
- Gauge port
- RDM2 - NG06 (CETOP 03)
  RDM3 - NG10 (CETOP 05)

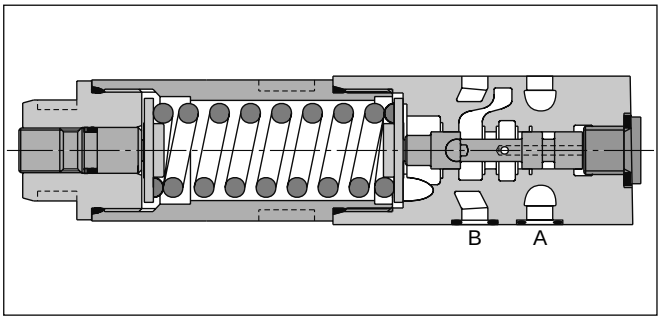

RDM2

Ordering code

RD	M					V		
Pressure relief valve, direct operated	Manapak	Size	Pressure relief	Pressure range	Adjustment	Seal FPM	Gauge port	Design series (not required for ordering)

Code	Size
2	**NG06**
3	**NG10**

Code	Pressure relief
PT	**P**
TT [1]	T

Code	Gauge port
G [2]	**G¼**
C	Coupling M16

Code	Adjustment
S	**Hexagon socket**
L	Cylinder lock
K	Turning knob [3]

Pressure range	
Code	RDM2
02	1.5 to 25 bar
06	**1.5 to 64 bar**
16	**3 to 160 bar**
21	**3 to 210 bar**
35	5 to 350 bar
Code	RDM3
01	1.5 to 19 bar
05	1.5 to 50 bar
10	3 to 100 bar
15	3 to 150 bar
21	3 to 210 bar

Bold letters =
Short-term availability

[1] NG06 only, max. 160 bar.
[2] Standard in housing.
[3] NG06 only.

RDM UK.INDD CM 31.03.15

Technical data

General			
Series		**RDM2**	**RDM3**
Size		**NG06**	**NG10**
Mounting interface		ISO 4401	
Weight	[kg]	1.3	2.6
$MTTF_D$ value	[years]	150	
Ambient temperature	[°C]	-20...+60	
Hydraulic			
Max. operating pressure P, A, B	[bar]	350	315
T	[bar]	50	10
Fluid		Hydraulic oil according to DIN 51524	
Fluid temperature	[°C]	-20...+70	
Viscosity, permitted	[cSt] / [mm²/s]	20 ... 400	
recommended	[cSt] / [mm²/s]	30 ... 80	
Filtration		ISO 4406 (1999); 18/16/13	
Max. flow	[l/min]	40	80

Performance curves

RDM2 02

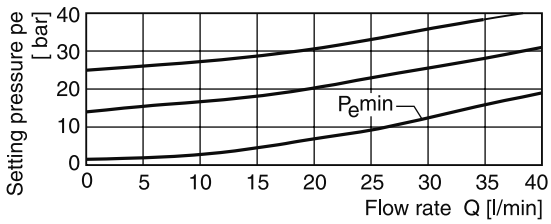

RDM2 06

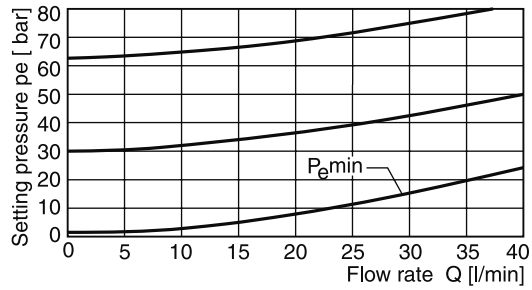

RDM2 16

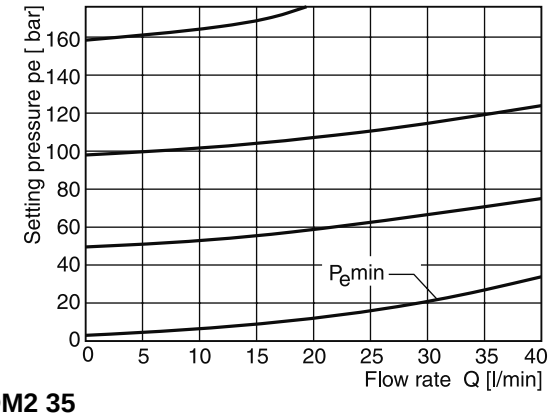

RDM2 21

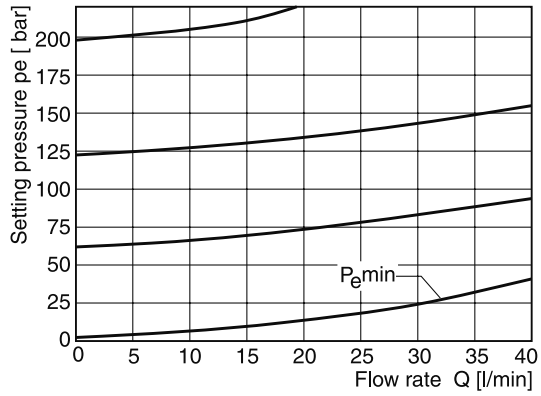

RDM2 35

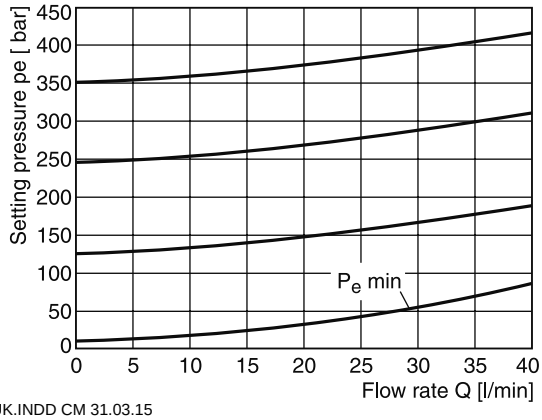

All characteristic curves measured with HLP46 at 50 °C.

RDM UK.INDD CM 31.03.15

RDM3 01

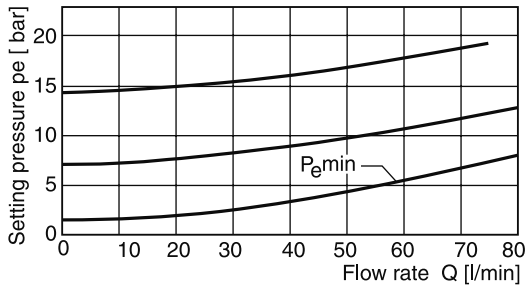

RDM3 05

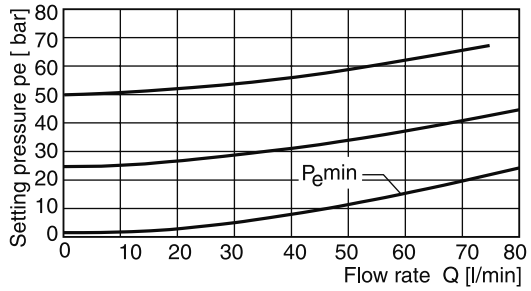

RDM3 10

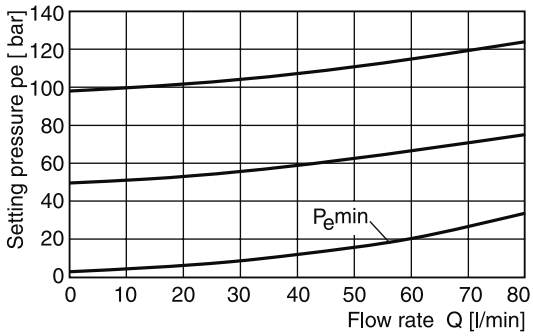

RDM3 21

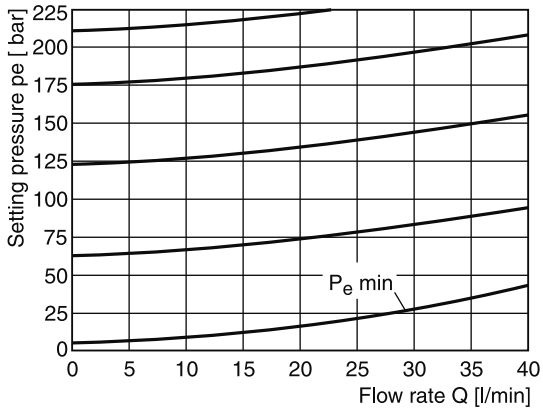

RDM3 15

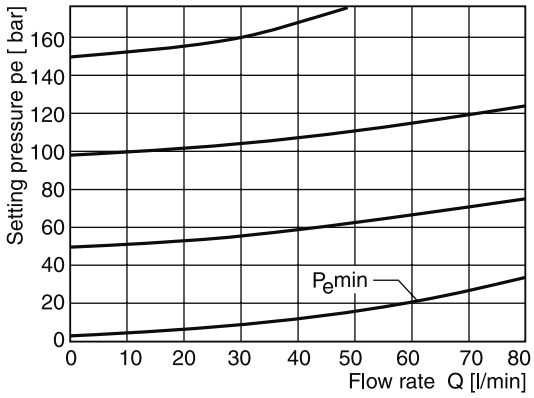

All characteristic curves measured with HLP46 at 50 °C.

7

Schematics

RDM*PT

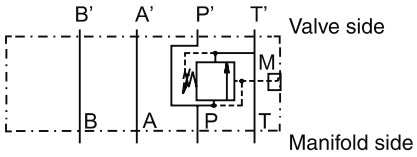

RDM*TT

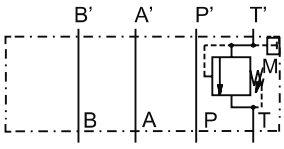

Gauge port option C

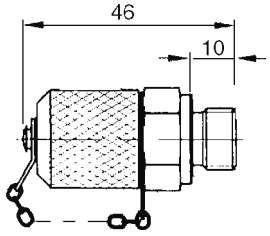

RDM2

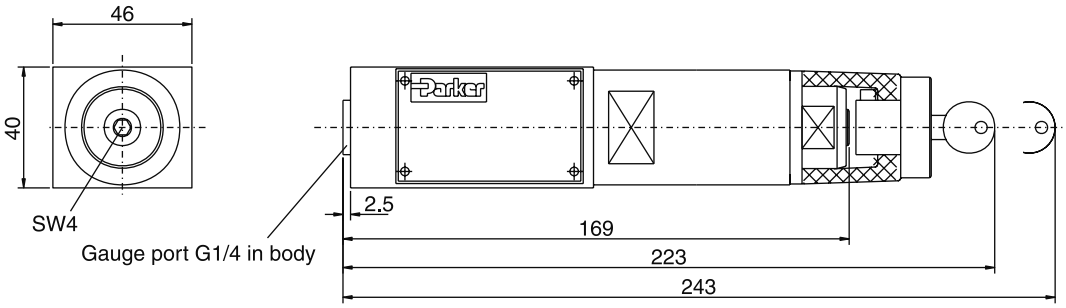

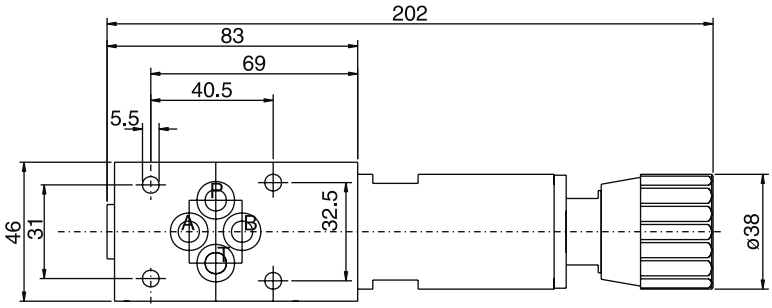

7

RDM3

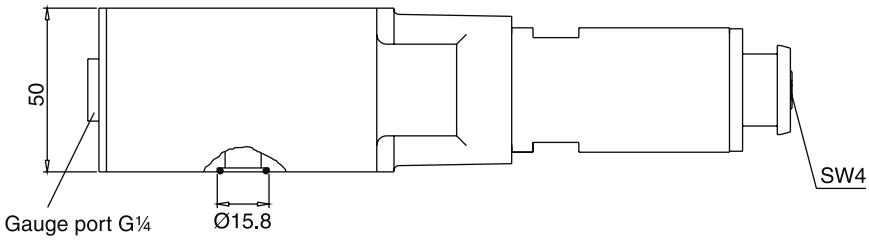

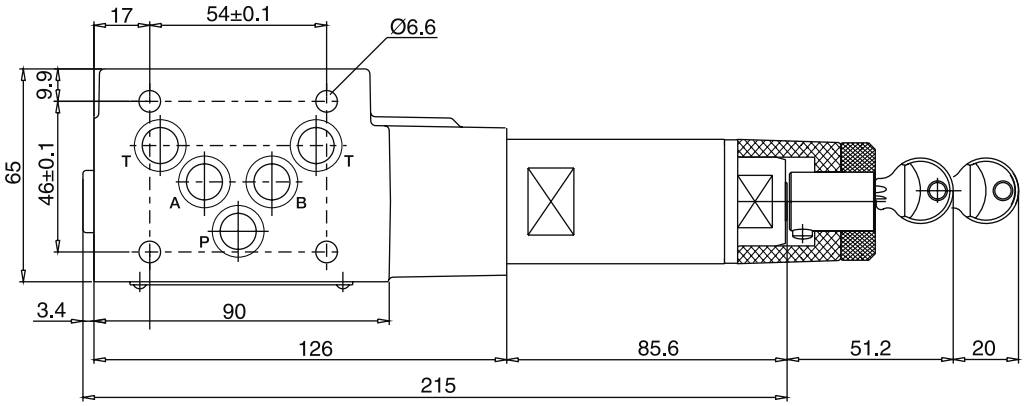

Seal kit order code		
Seal	**RDM2**	**RDM3**
V	SK-RDM2-V	SK-RDM3-V

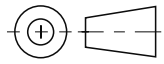

RDM UK.INDD CM 31.03.15

The pilot operated pressure relief valves from the Parker Manapak series RM are in sandwich design for easy configuration of stack systems. Depending on type, pressure limiting can be achieved in ports P, A or B with unloading to port T.

RM valves may only be mounted in the defined mounting position.

RM6

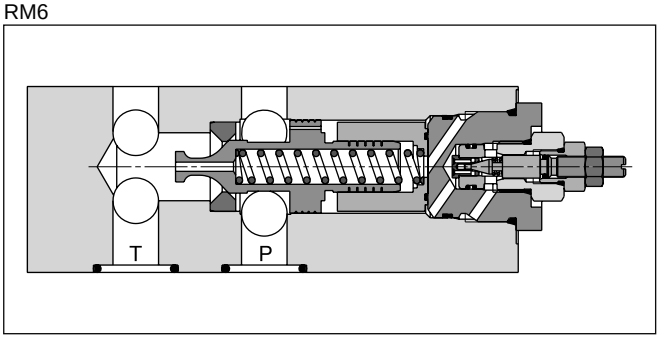

RM6

Features

- The valve bodies of the Parker Manapak valve series RM are made of steel.
- The pressure can be set by hexagon socket screw (RM4), hexagon socket screw or knob with cylinder lock (RM6).Piloting results in a flat p/Q performance curve.
- Piloting results in a flat p/Q performance curve.
- The orifices located in the main spool limit the pilot oil flow.

Schematics

RM4-NG16
RM6-NG25
(only PT)

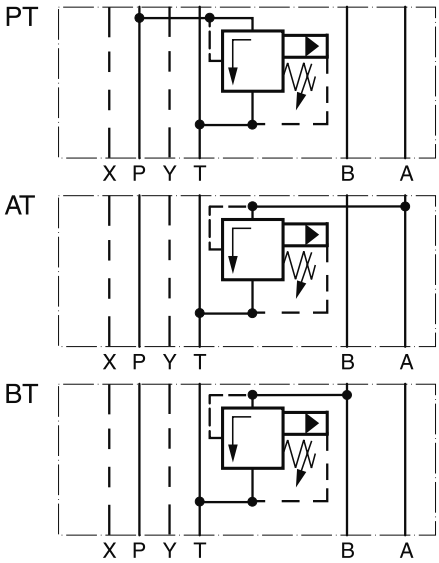

Technical data

General			
Design		Pilot operated pressure relief valve	
Actuation		hydraulic	
Size		**NG16**	**NG25**
Mounting interface		ISO 4401	
Mounting position		unrestricted	
Ambient temperature	[°C]	-20...+60	
$MTTF_D$ value	[years]	150	
Weight	[kg]	4.9	5.9
Hydraulic			
Max. operating pressure	[bar]	350	
Fluid		Hydraulic oil according to DIN 51524	
Fluid temperature	[°C]	-20...+70	
Viscosity, permitted	[cSt] / [mm^2/s]	20 ... 400	
recommended	[cSt] / [mm^2/s]	30 ... 80	
Filtration		ISO 4406 (1999); 18/16/13	

RM UK.INDD CM 30.03.15

RM4			S	V	HT
Pressure relief valve NG16	**Connection**	**Pressure range**	**Adjustment hexagon socket**	**Seal FPM**	**Design series**

Code	Connection
PT	P to T
AT	A to T
BT	B to T

Code	Pressure range
07	5 to 65 bar
25	**10 to 250 bar**
35	10 to 350 bar

RM6	PT			V	
Pressure relief valve NG25	**Connection P to T**	**Pressure range**	**Adjustment**	**Seal FPM**	**Design series** (not required for ordering)

Code	Pressure range
07	5 to 70 bar
17	10 to 175 bar
25	**10 to 250 bar**
35	10 to 350 bar

Code	Adjustment
S	**Hexagon socket**
L	Cylinder lock

Bold letters =
Short-term availability

7

p/Q performance curves

RM4

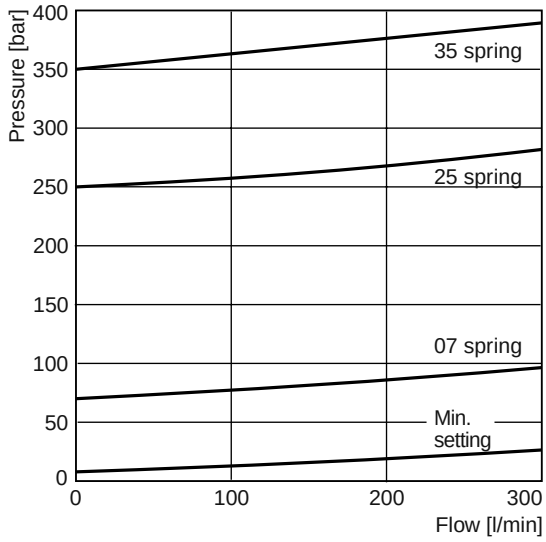

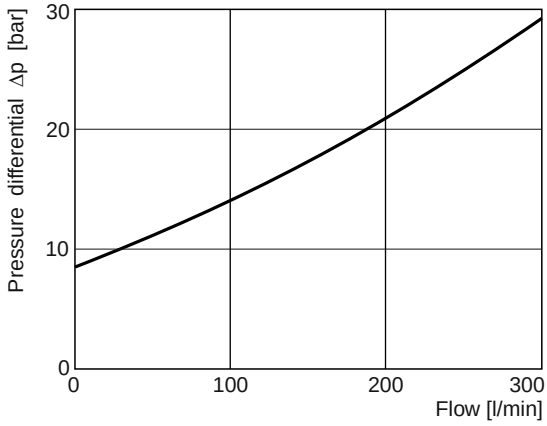

RM6

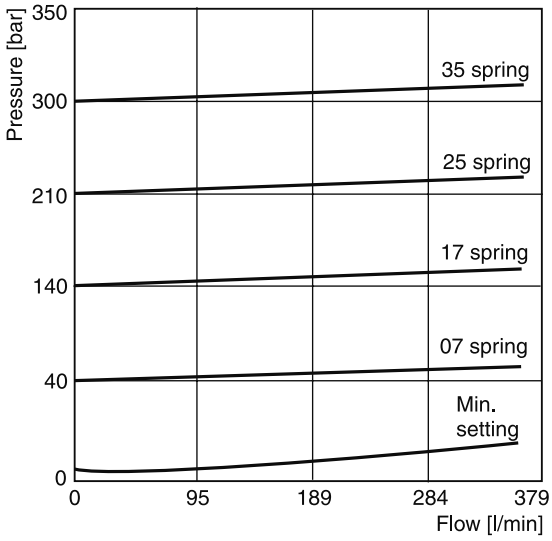

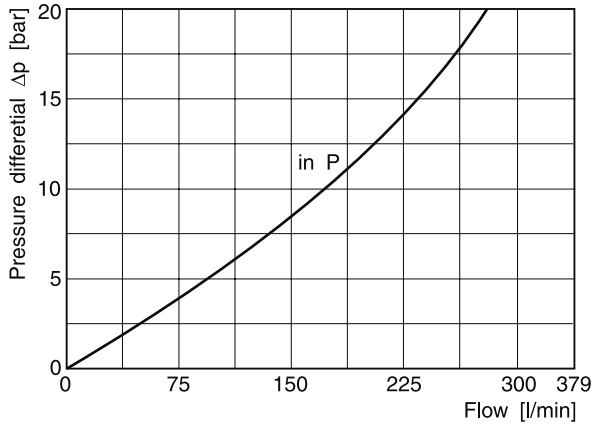

All characteristic curves measured with HLP46 at 50 °C.

7

RM4

Adjustment code S

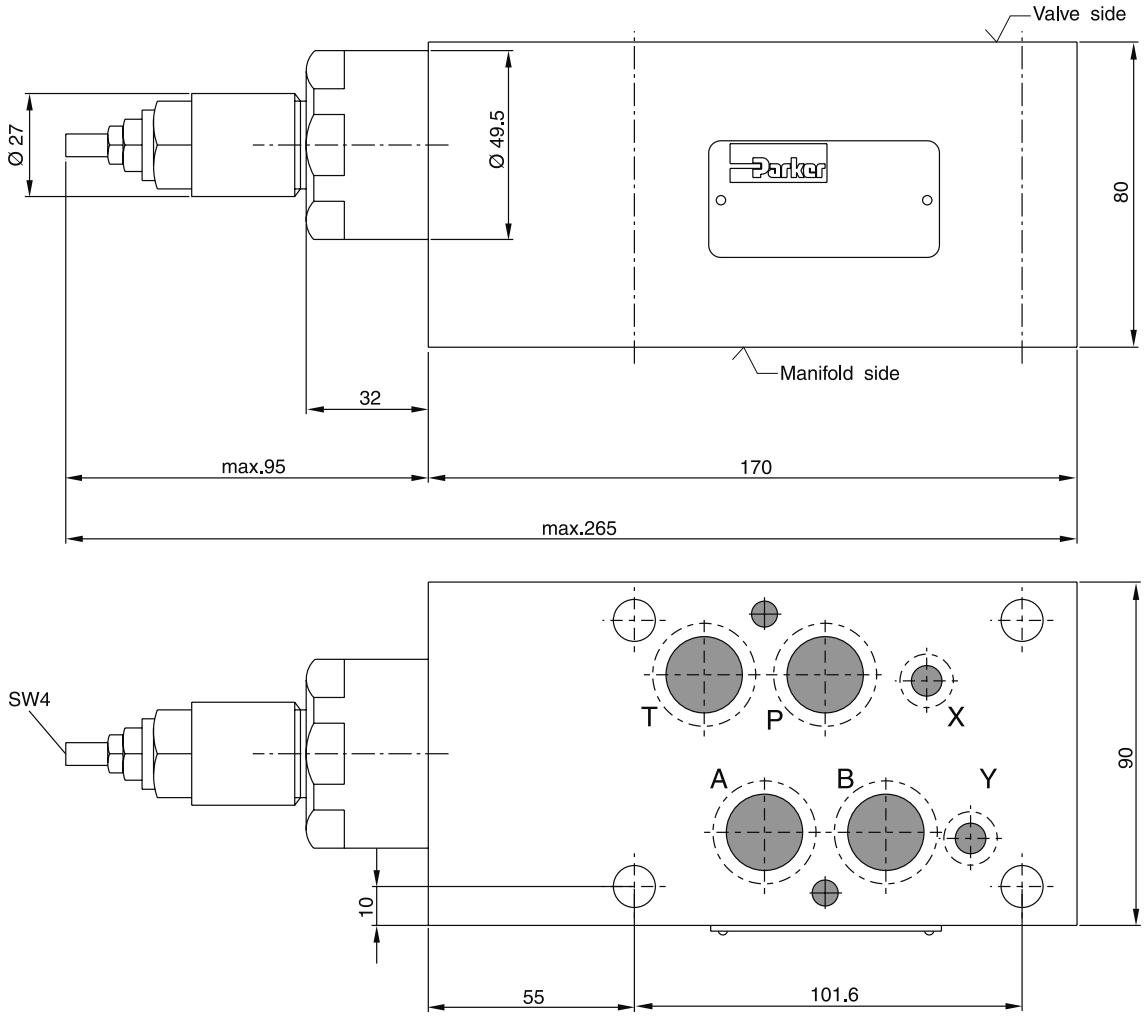

Seal kit RM4	
Seal	**Order code**
V	SK-RM4-V-10

RM6

Adjustment Code S

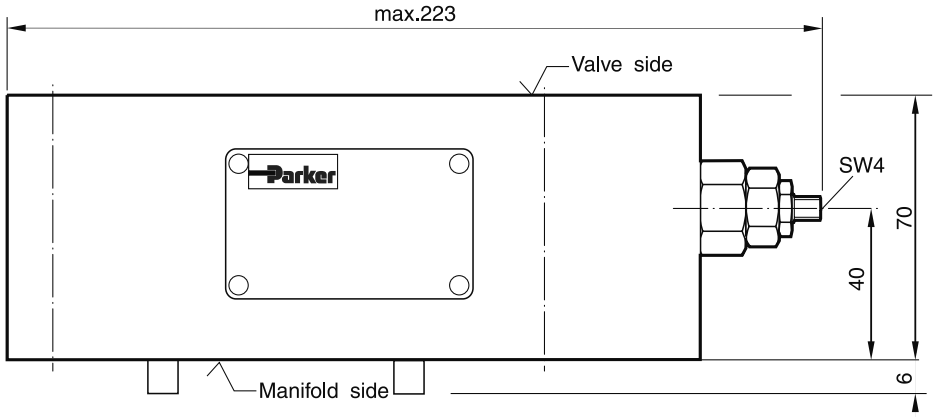

Adjustment Code L

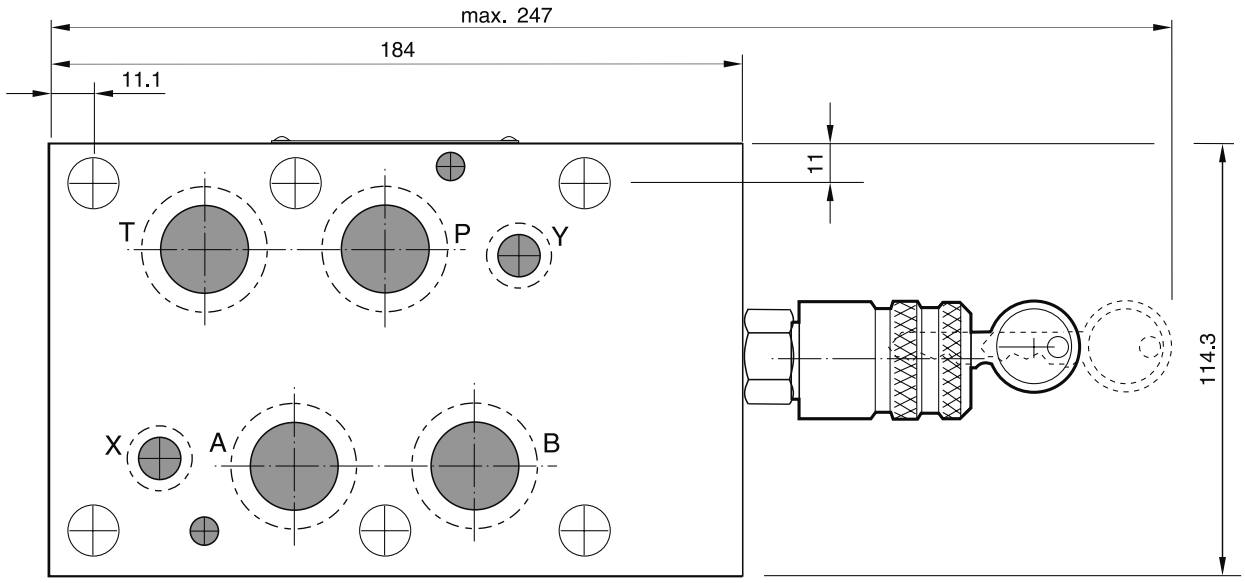

Seal kit RM6	
Seal	**Order code**
V	SK-RM6-V-11

Pilot operated pressure relief valves series ZDV are designed for maximum flow rates.

The relief function can be located between P and T, A and T, B and T or A and T + B and T for typical pressure relief functions.

For a pre-charge function the ZDV can be ordered with pressure function between A and B + B and A.

ZDV-P01

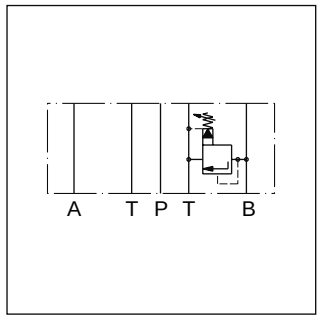

ZDV-B02

Features

- High flow capacity
- Pressure function in P, A, B or A + B
- Sizes
  ZDV01 - NG06 (CETOP 03)
  ZDV02 - NG10 (CETOP 05)

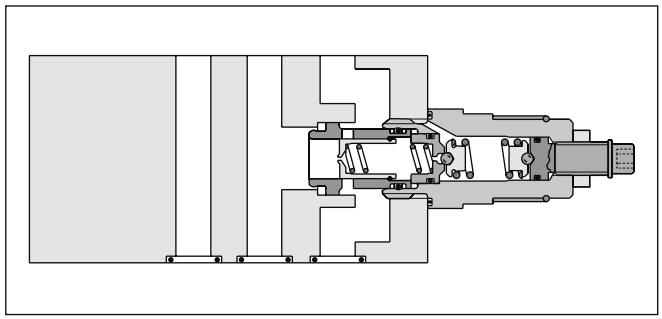

ZDV-B02

Ordering code

ZDV – ☐ ☐ – ☐ **S0** – **D** ☐

ZDV	–	☐	☐	–	☐	S0	–	D	☐
Pressure relief valve		Pressure control	Nominal size		Pressure stages	Hexagon screw with lock nut		Design series	Seal

Code	Size	Pressure control
P	NG06/10	P - T
A	NG06/10	A - T
B	NG06/10	B - T
AB	NG06/10	A - T & B - T
ABS	NG06/10	A - B & B - A

Code	Nominal size
01	NG06
02	NG10

Code	Seal
1	NBR
5	FPM

Code	Pressure stages
1	up to 70 bar
5 [1)]	up to 350 bar

Ordering code details see end of chapter.

[1)] Code ABS and size 10 up to 315 bar.

Technical data

General				
Size			**NG06**	**NG10**
Mounting interface			DIN 24340 A6 ISO 4401 NFPA D03	DIN 24340 A10 ISO 4401 NFPA D05
			CETOP RP 121	
Mounting position			unrestricted	
Ambient temperature		[°C]	-20...+60	
$MTTF_D$ value		[years]	150	
Weight	1 cartridge	[kg]	1.6	3.0
	2 cartridges	[kg]	2.5	3.7
Hydraulic				
Max. operating pressure		[bar]	350 (ZDV-ABS 315)	315
Nominal flow		[l/min]	80	140
Fluid			Hydraulic oil according to DIN 51524	
Fluid temperature		[°C]	-20...+70 (NBR: -25...+70)	
Viscosity	permitted	[cSt] / [mm^2/s]	20 ... 400	
	recommended	[cSt] / [mm^2/s]	30 ... 80	
Filtration			ISO 4406 (1999); 18/16/13	

p/Q performance curves

ZDV-P/A/B/ABS01

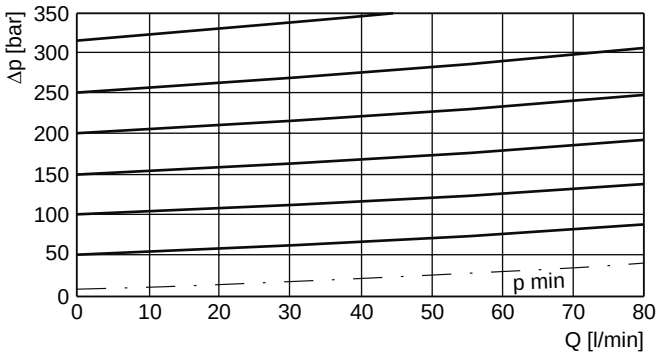

ZDV-AB01

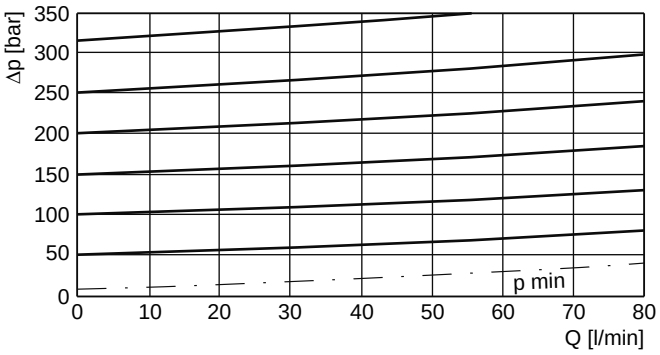

ZDV-P/A/B/AB02

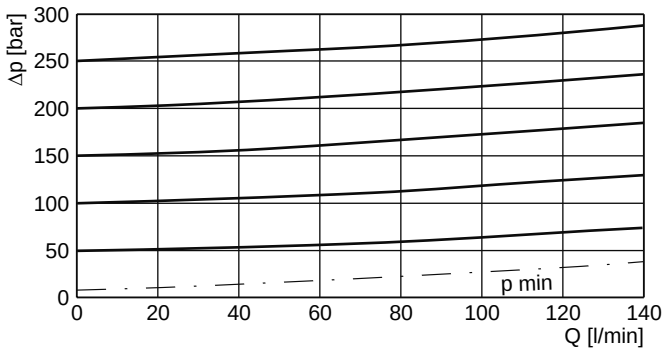

ZDV-ABS02

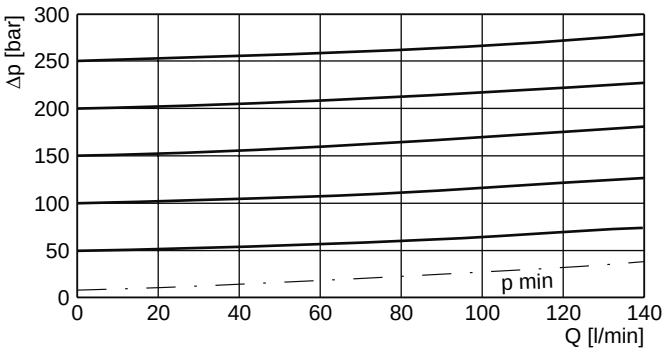

All characteristic curves measured with HLP46 at 50 °C.

ZDV01

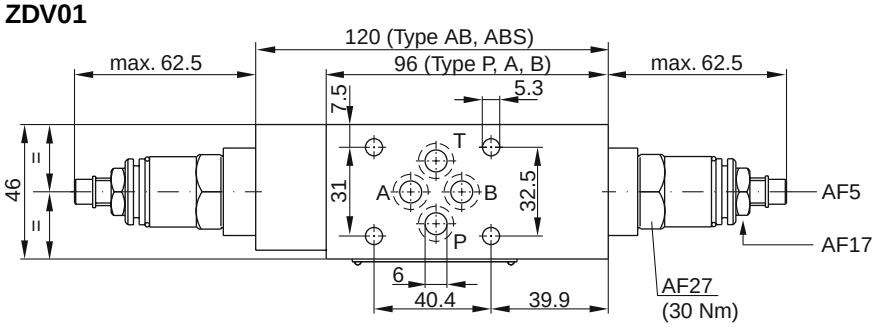

Seal kit	
Seal	**Order code**
1	098-91182-0
5	098-91183-0
Complete cartridge	
Pressure stage	**Order code**
1	098-91116-0
5	098-91117-0

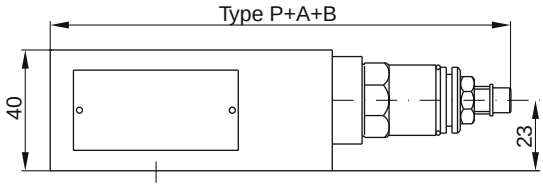

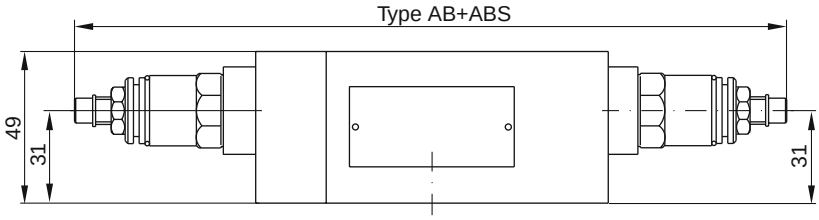

7

ZDV02

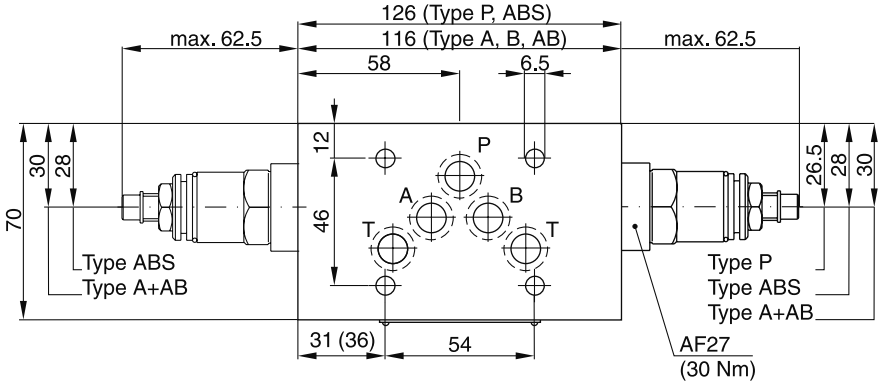

Seal kit	
Seal	**Order code**
1	098-91076-0
5	098-91077-0
Complete cartridge	
Pressure stage	**Order code**
1	098-91116-0
5	098-91117-0

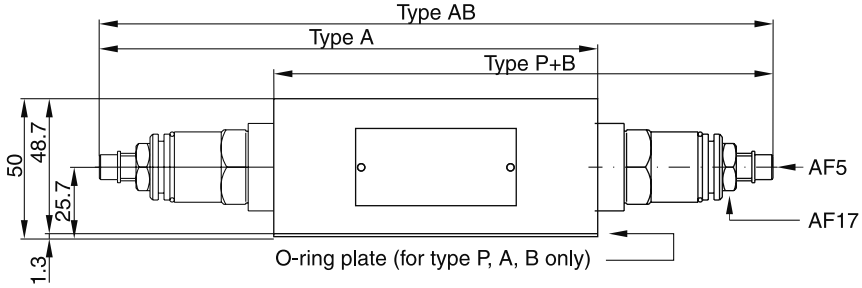

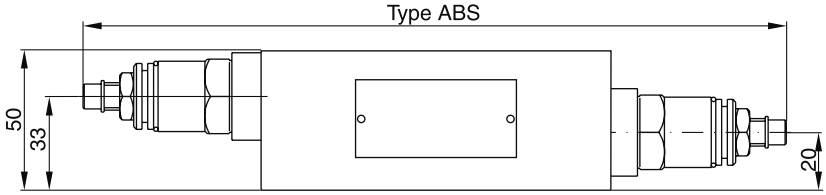

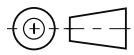

ZDV01

Pressure control P-T

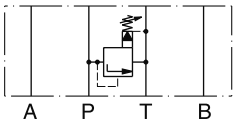

Series	Order No.
ZDV-P01-1-S0-D1	098-91201-0
ZDV-P01-5-S0-D1	098-91202-0

Pressure control A-T

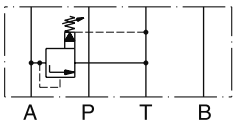

Series	Order No.
ZDV-A01-1-S0-D1	098-91203-0
ZDV-A01-5-S0-D1	098-91204-0

Pressure control B-T

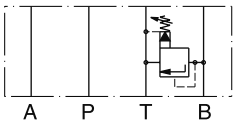

Series	Order No.
ZDV-B01-1-S0-D1	098-91205-0
ZDV-B01-5-S0-D1	098-91206-0

Pressure control A-T & B-T

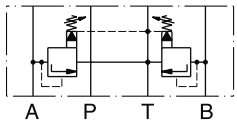

Series	Order No.
ZDV-AB01-1-S0-D1	098-91207-0
ZDV-AB01-5-S0-D1	098-91208-0

Pressure control A-B & B-A

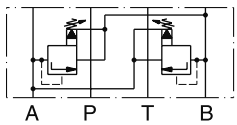

Series	Order No.
ZDV-ABS01-1-S0-D1	098-91209-0
ZDV-ABS01-5-S0-D1	098-91210-0

ZDV02

Pressure control P-T

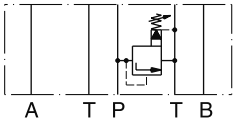

Series	Order No.
ZDV-P02-1-S0-D1	098-91034-0
ZDV-P02-5-S0-D1	098-91035-0

Pressure control A-T

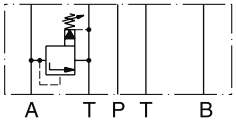

Series	Order No.
ZDV-A02-1-S0-D1	098-91036-0
ZDV-A02-5-S0-D1	098-91037-0

Pressure control B-T

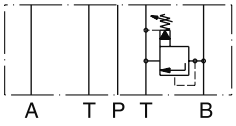

Series	Order No.
ZDV-B02-1-S0-D1	098-91038-0
ZDV-B02-5-S0-D1	098-91039-0

Pressure control A-T & B-T

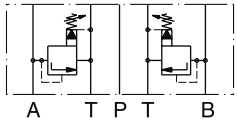

Series	Order No.
ZDV-AB02-1-S0-D1	098-91040-0
ZDV-AB02-5-S0-D1	098-91041-0

Pressure control A-B & B-A

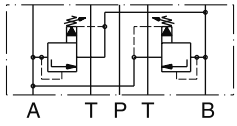

Series	Order No.
ZDV-ABS02-1-S0-D1	098-91042-0
ZDV-ABS02-5-S0-D1	098-91043-0

Series PRDM are direct operated pressure reducing valves to regulate pressure in one area of a hydraulic circuit at a predetermined level below normal system pressure. Additionally, an integral pressure relieving function for the secondary reduced pressure circuit is incorporated into the design.

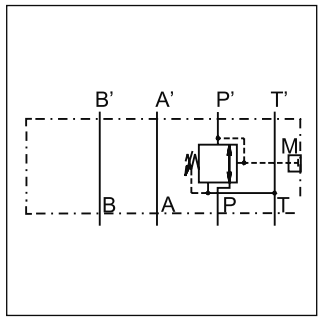

Example PP

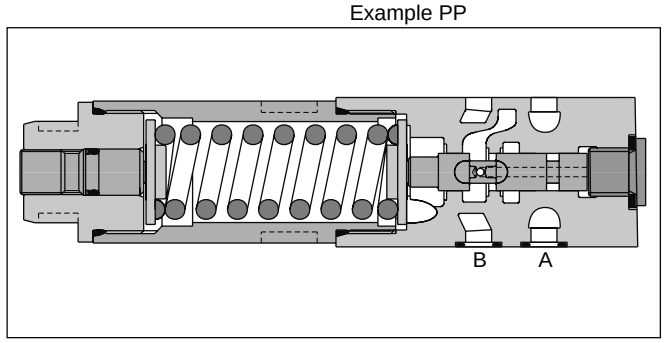

Funtion

These valves are "normally open" devices that allow fluid to flow through the controlled port during their non-actuated or "at rest" condition. When downstream pressure exceeds the value set by the spring force, the control piston moves off its seat, closing off the flow path and thus reducing the fluid passing through from the main system. The cushioned piston modulates to maintain the preset pressure in this branch of the hydraulic circuit. If, due to external forces, the pressure continues to rise in this branch circuit, the piston will keep moving against the spring force allowing fluid to be drained to the tank, thereby limiting maximum pressure to the valve's setting.

Features

- 3-way design for pressure relieving of the secondary side
- The direct operated, cushioned piston design results in fast response, low leakage and minimal hysteresis.
- Reduced pressure in the 'P', 'A' or 'B' port.
- Pressure settings:
  25, 70, 160, 210, 350 bar for PRDM2,
  19, 50, 100, 150, 210 bar for PRDM3.
- Gauge port
- PRDM2 - NG06 (CETOP 03)
  PRDM3 - NG10 (CETOP 05)

Schematics

PRDM*AA

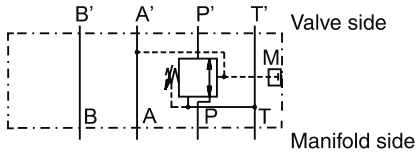

PRDM*BB

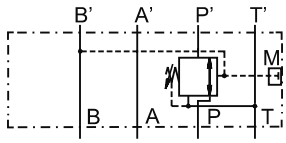

PRDM*PP

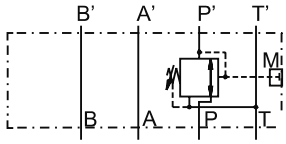

Gauge port option C

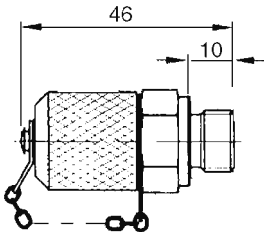

Ordering code

PRD	M					V		
Pressure reducing valve, direct operated	**Manapak**	**Size**	**Port reduction**	**Pressure range**	**Adjustment**	**Seal FPM**	**Gauge port**	**Design series** (not required for ordering)

Code	Size
2	**NG06**
3	**NG10**

Code	Gauge port
G	**G¼**
C	Coupling M16

Code	Connection
PP	**P**
AA	**A**
BB	**B**

Code	Adjustment
S	**Hexagon socket**
L	Cylinder lock
K	Turning knob [1)]

Pressure range	
Code	PRDM2
02	up to 25 bar
06	**up to 64 bar**
16	**up to 160 bar**
21	**up to 210 bar**
35	up to 350 bar
Code	PRDM3
01	**up to 19 bar**
05	**up to 50 bar**
10	up to 100 bar
15	**up to 150 bar**
21	**up to 210 bar**

Bold letters =
Short-term availability

[1)] NG06 only.

Technical data

General			
Series		**PRDM2**	**PRDM3**
Size		**NG06**	**NG10**
Mounting interface		ISO 4401	
Ambient temperature	[°C]	-20...+60	
Weight	[kg]	1.3	2.6
$MTTF_D$ value	[years]	150	
Hydraulic			
Max. operating pressure	P, A, B	350	315
	T [bar]	50	50
Fluid		Hydraulic oil according to DIN 51524	
Fluid temperature	[°C]	-20...+70	
Viscosity, permitted	[cSt] / [mm²/s]	20 ... 400	
recommended	[cSt] / [mm²/s]	30 ... 80	
Filtration		ISO 4406 (1999); 18/16/13	

PRDM2 02

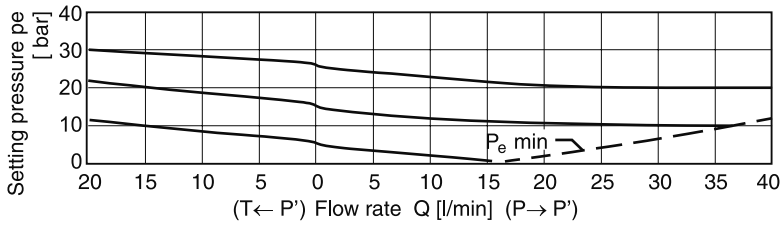

PRDM2 06

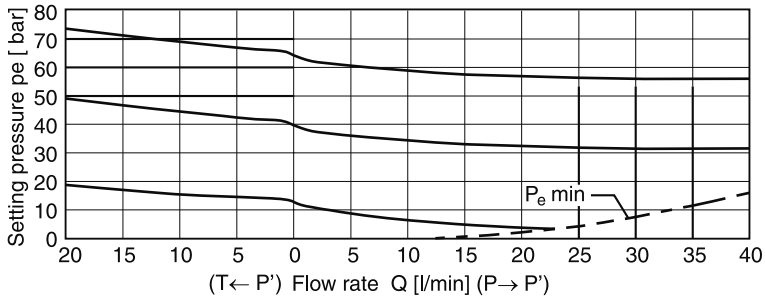

PRDM2 16/21

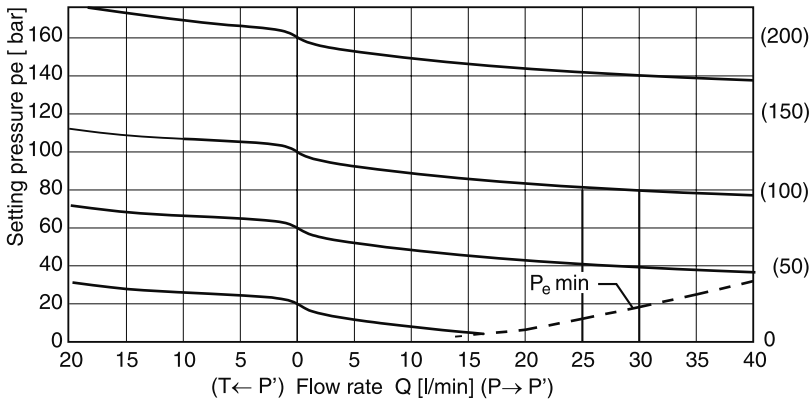

PRDM2 35

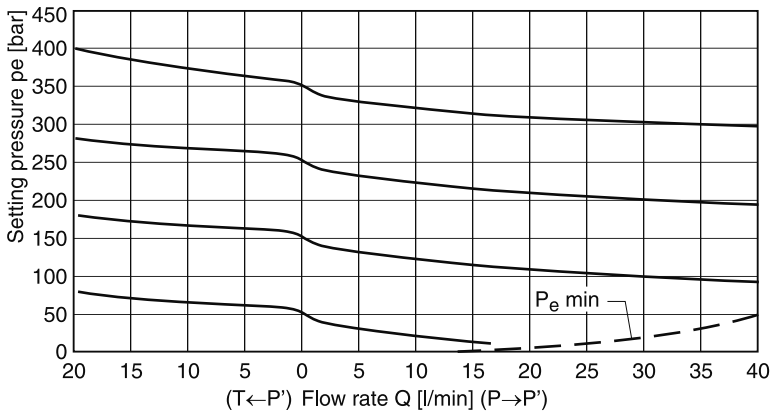

All characteristic curves measured with HLP46 at 50 °C.

PRDM3 01

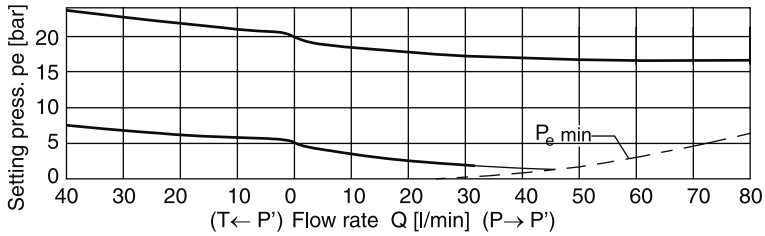

PRDM3 05

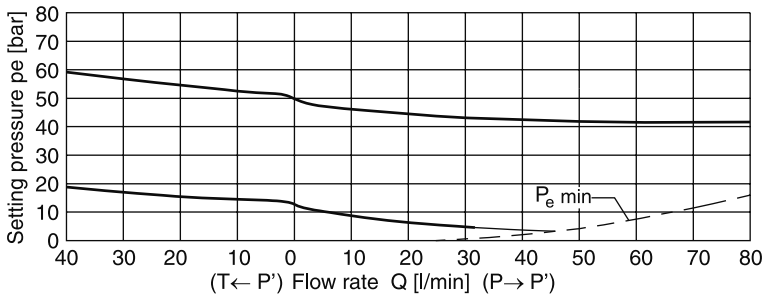

PRDM3 10

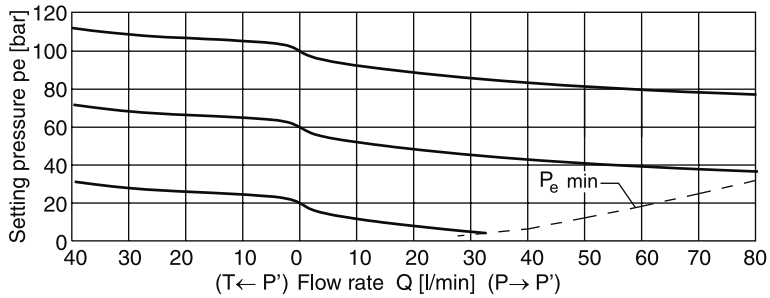

PRDM3 15

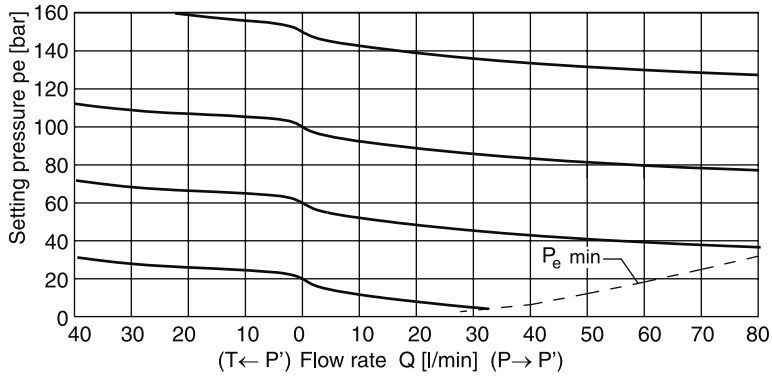

PRDM3 21

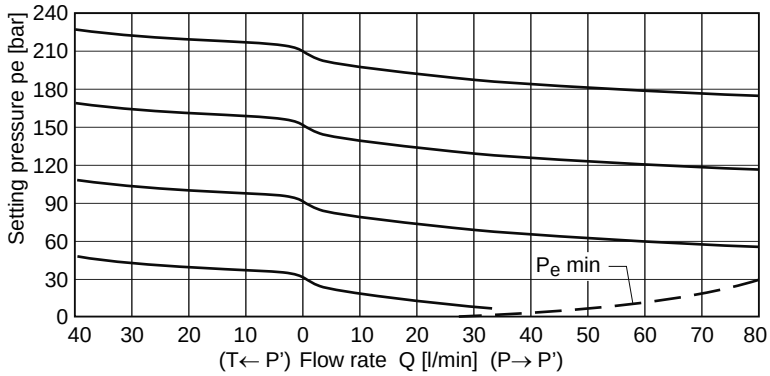

All characteristic curves measured with HLP46 at 50 °C.

PRDM UK.INDD CM 30.03.15

PRDM2

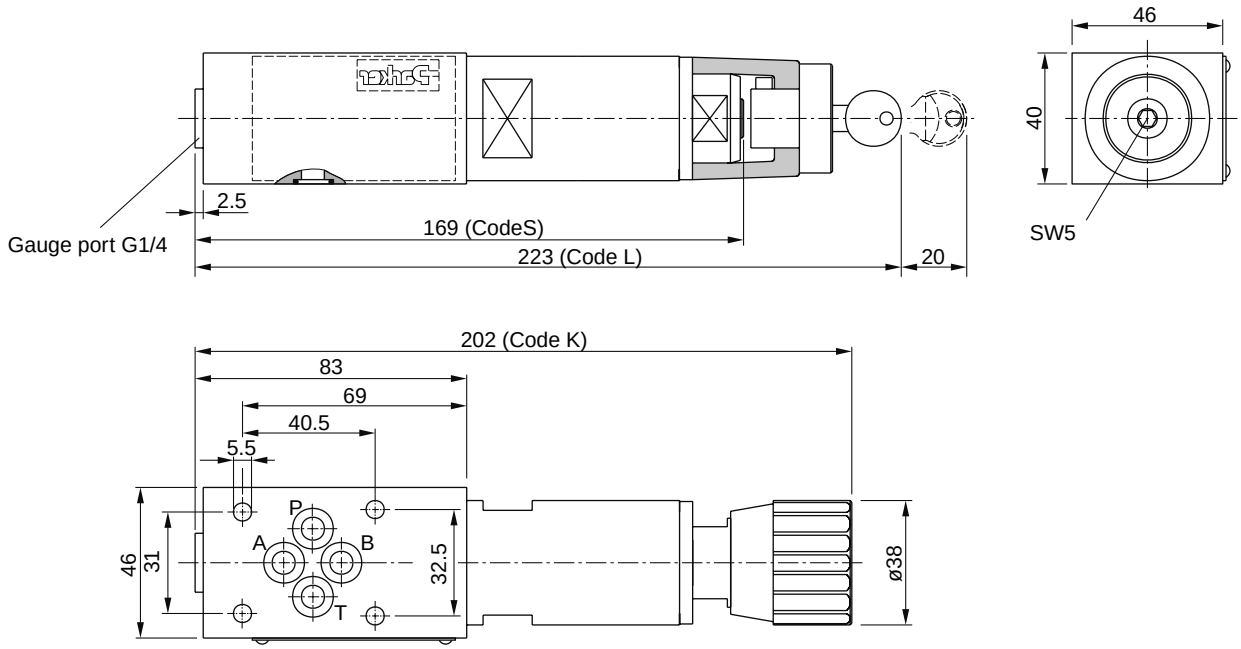

PRDM3

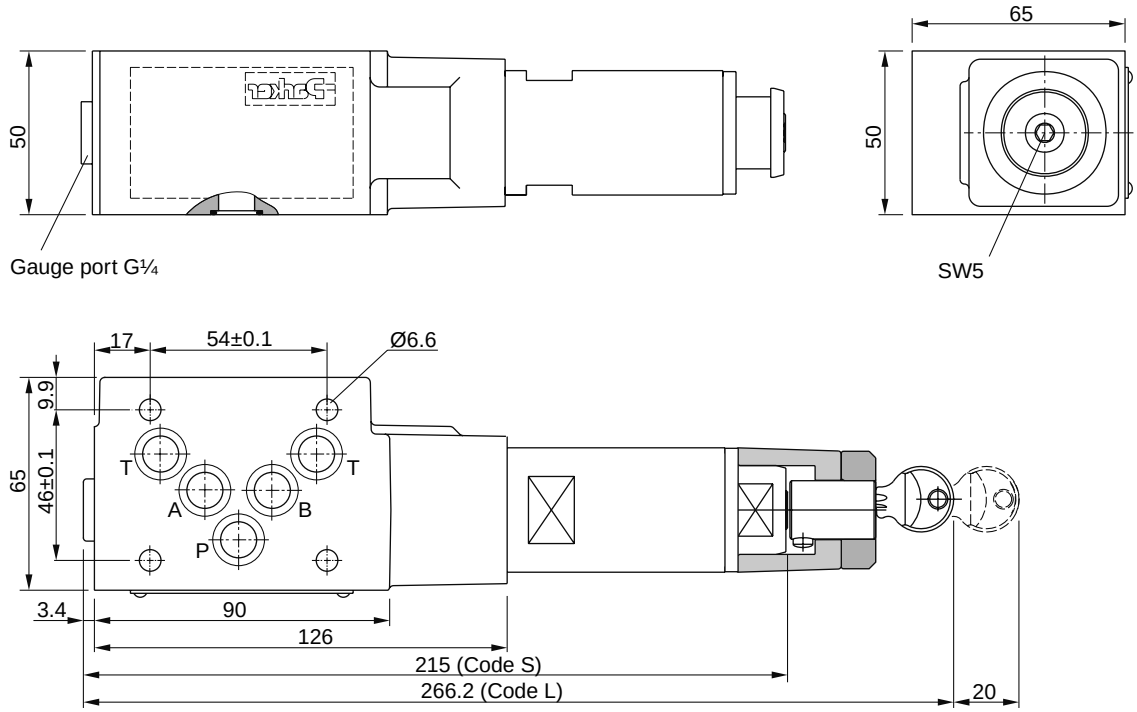

Seal kit order code		
Seal	**PRDM2**	**PRDM3**
V	SK-PRDM2-V	SK-PRDM3-V

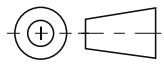

The pilot operated pressure reducing valves series PRM are in sandwich design for easy configuration of stack systems. The reducing function is located in port P.

The pressure reduction for the desired connecting port is achieved by internal connections of the pilot and drain lines with the corresponding channels.

PRM6

Features

- The valve bodies of the Parker Manapak valve series PRM are made of steel.
- The control pressure range can be set by hexagon socket screw (PRM4), knob, or knob with cylinder lock (PRM6).
- Pressure gauge/measuring connections are available in the valve body.
- Piloting results in a flat p/Q performance curve.
- PRM4 - NG16 (CETOP 07)
  PRM6 - NG25 (CETOP 08)

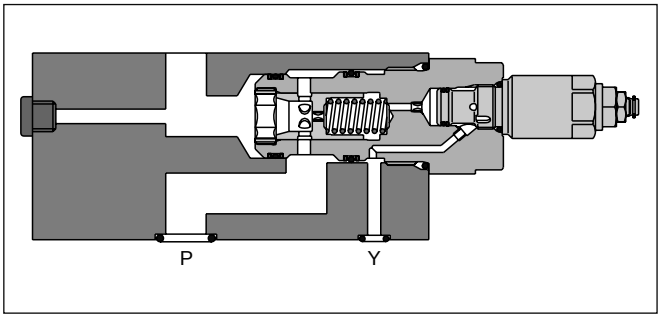

PRM4

7

Technical data

General			
Series		**PRM4**	**PRM6**
Size		**NG16**	**NG25**
Mounting interface		ISO 4401	
Ambient temperature	[°C]	-20...+60	
Weight	[kg]	5.0	5.6
$MTTF_D$ value	[years]	75	
Hydraulic			
Max. operating pressure	[bar]	350	250
Pressure reduction in channel		P, A, B	P, A
Fluid		Hydraulic oil according to DIN 51524	
Fluid temperature	[°C]	-20...+70	
Viscosity, permitted	[cSt] / [mm²/s]	20 ... 400	
recommended	[cSt] / [mm²/s]	30 ... 80	
Filtration		ISO 4406 (1999); 18/16/13	

Ordering Code

PRM	4			S	V	HT
Pilot operated pressure reducing valve	Size NG16	Pressure reducing	Pressure range	Adjustment hexagon socket	Seal FPM	Design series

Code	Pressure reducing
PP	Function in P, reduced pressure in P
PA	Function in P, reduced pressure in A
PB	Function in P, reduced pressure in B

Code	Pressure range
07	4 to 70 bar
25	10 to 250 bar
35	10 to 350 bar

PRM	6				V	G	
Pilot operated pressure reducing valve	Size NG25	Pressure reducing	Pressure range	Adjustment	Seal FPM	Gauge port G¼"	Design series (not required for ordering)

Code	Connection
PA	P
AP	A

Code	Adjustment
L	Cylinder lock
K	Turning knob

Code	Pressure range
07	10 to 70 bar
17	10 to 175 bar
25	10 to 250 bar

Δp/Q performance curves

PRM4

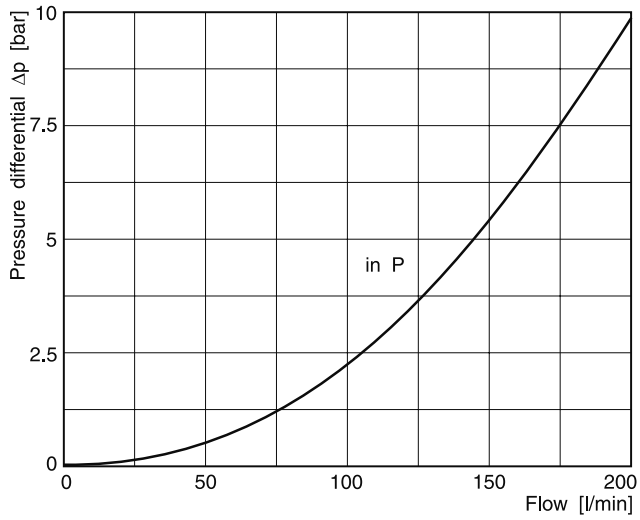

PRM6

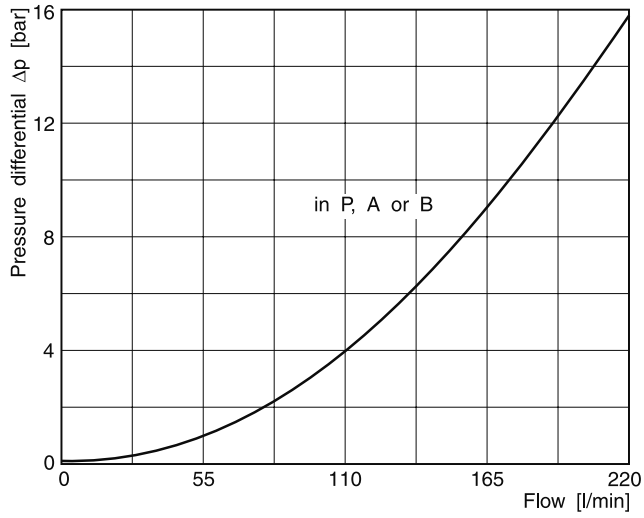

All characteristic curves measured with HLP46 at 50 °C.

Schematics

PRM4PP
PRM6PA

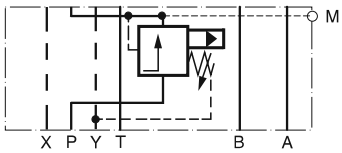

PRM4PA
PRM6AP

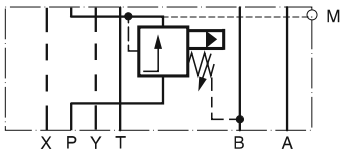

PRM4PB

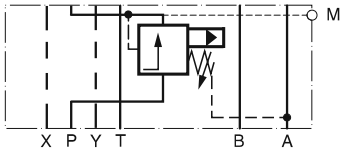

7

PRM4

Adjustment code S

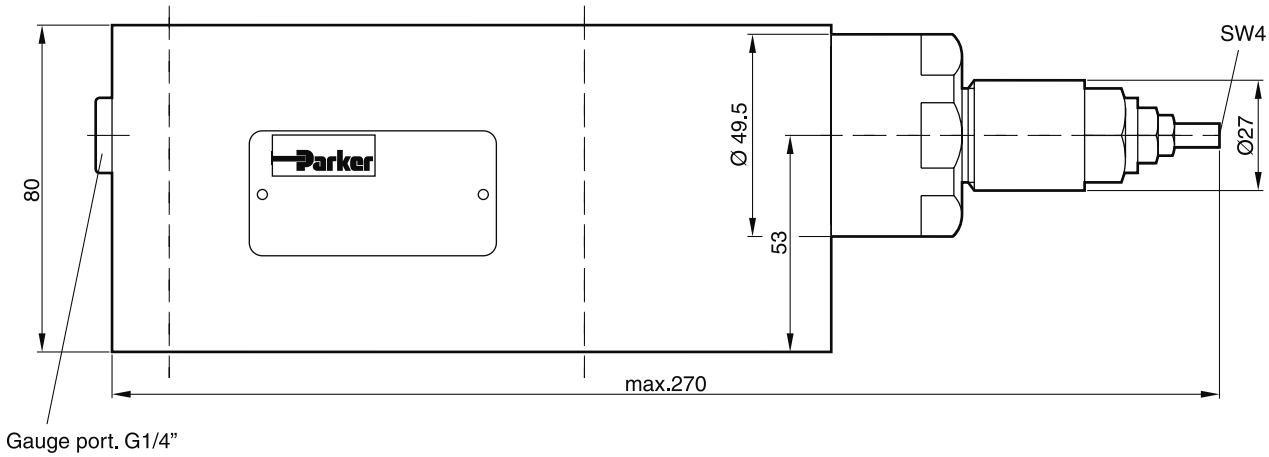

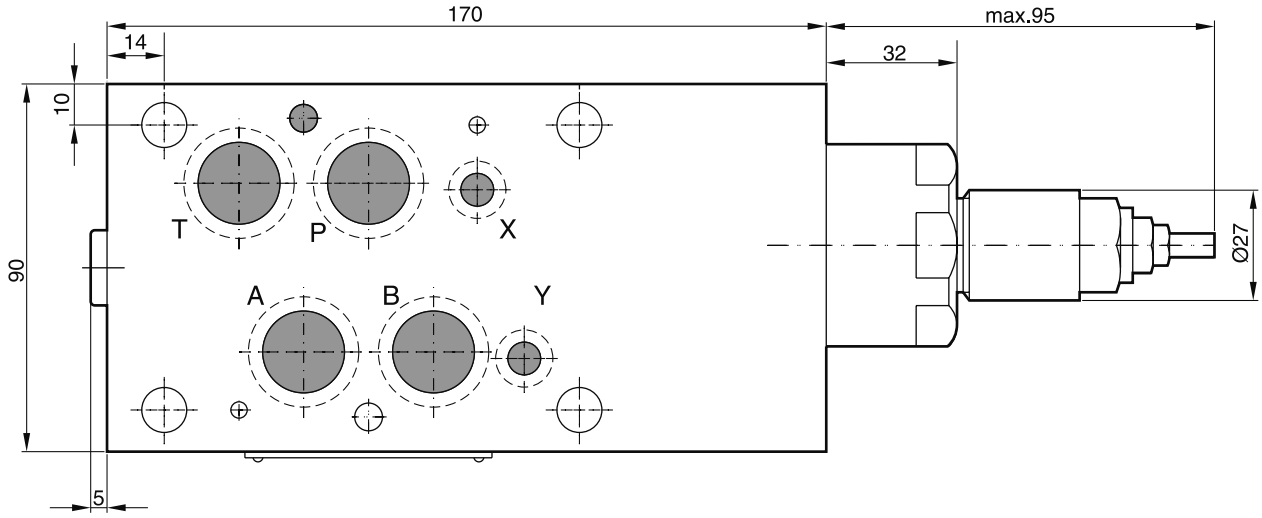

Seal kit PRM4	
Seal	**Order code**
V	SK-PRM4-V-10

PRM6

Adjustment code L

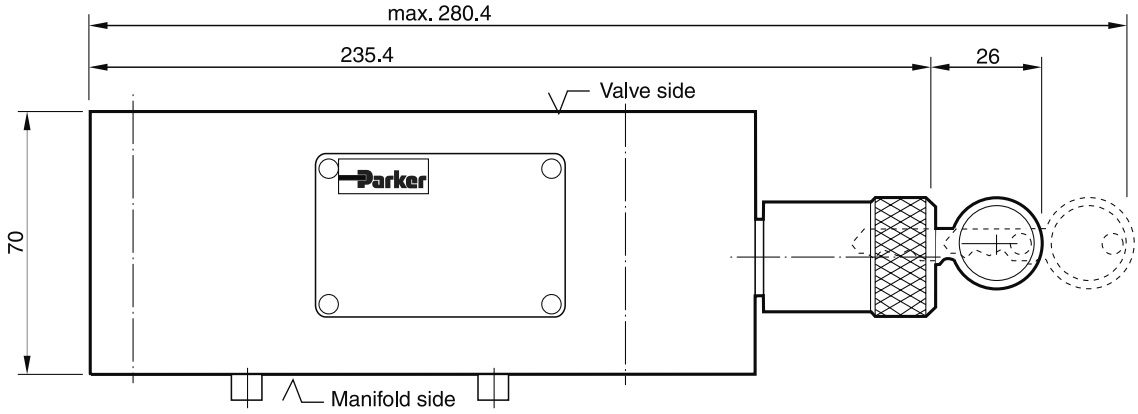

Adjustment code K

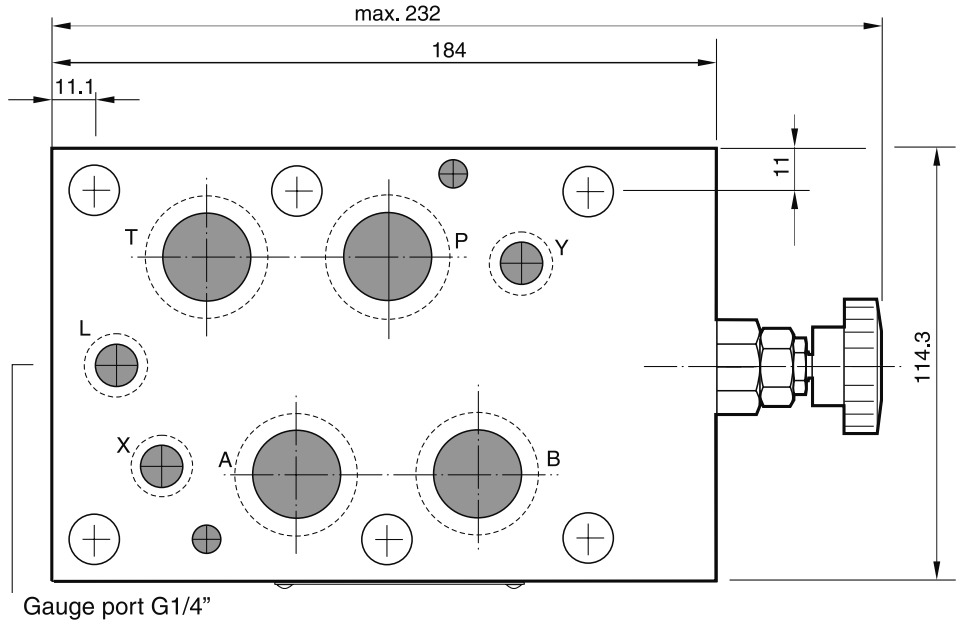

Seal kit PRM6	
Seal	**Order code**
V	SK-PRM6-V-25

Pilot operated pressure reducing valves series ZDR are designed for maximum flow rates.

The reducing function can be located in the ports P, A or B. The sizes NG06 and NG10 are equipped with an integral return flow check valve (reducing function in A or B).

Features

- High flow capacity
- Pressure function in P, A or B
- With integral return flow check valve
- Sizes:
  ZDR01 - NG06 (CETOP 03)
  ZDR02 - NG10 (CETOP 05)

ZDR-P01

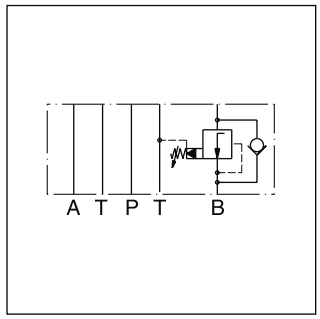

ZDR-B02

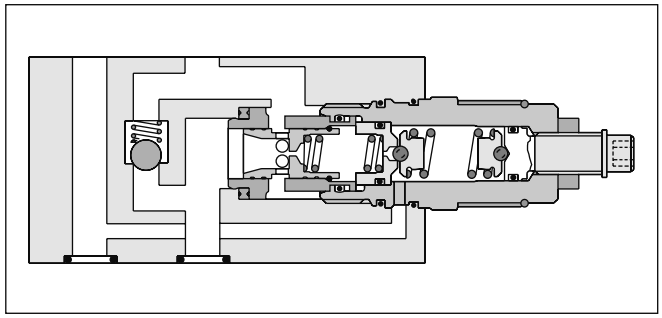

ZDR-B02

Ordering code

ZDR – [ ] [ ] – [ ] **S0** – **D** [ ]

Pilot operated pressure reducing valve | **Pressure control** | **Nominal size** | **Pressure stages** | **Hexagon screw with lock nut** | **Design series** | **Seal**

Code	Size	Pressure control
P	NG06/10	Pressure reducing in P with pressure gauge port M
AR	NG06/10	Pressure reducing in A with check valve
BR	NG06/10	Pressure reducing in B with check valve

Code	Nominal size
01	NG06
02	NG10

Code	Pressure stages
1	up to 70 bar
5 [1)]	up to 350 bar

Code	Seal
1	NBR
5	FPM

Ordering code details see end of chapter.

[1)] Code AR, BR and size 10 up to 315 bar.

Technical data

General				
Size			**NG06**	**NG10**
Mounting interface			DIN 24340 A6 ISO 4401 NFPA D03	DIN 24340 A10 ISO 4401 NFPA D05
			CETOP RP 121	
Mounting position			unrestricted	
Ambient temperature		[°C]	-20...+60	
$MTTF_D$ value		[years]	150	
Weight	ZDR-P	[kg]	1.6	2.9
	ZDR-AR / BR	[kg]	1.8	3.0
Hydraulic				
Max. operating pressure		[bar]	350 (ZDR-AR / BR 315)	315
Nominal flow		[l/min]	80	120
Pilot oil		[l/min]	0.3	0.3
Fluid			Hydraulic oil according to DIN 51524	
Fluid temperature		[°C]	-20...+70 (NBR: -25...+70)	
Viscosity	permitted	[cSt] / [mm^2/s]	20 ... 400	
	recommended	[cSt] / [mm^2/s]	30 ... 80	
Filtration			ISO 4406 (1999); 18/16/13	

p/Q performance curves

ZDR-P/AR/BR01

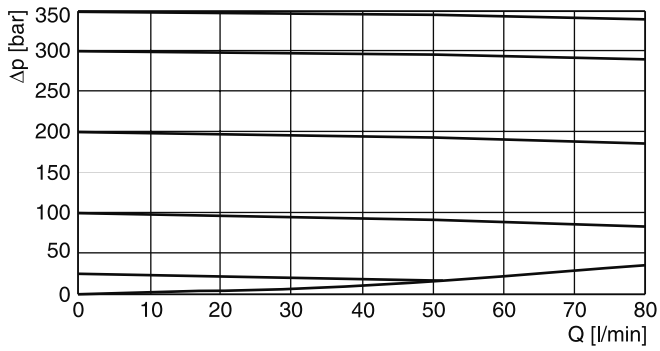

ZDR-P/AR/BR02

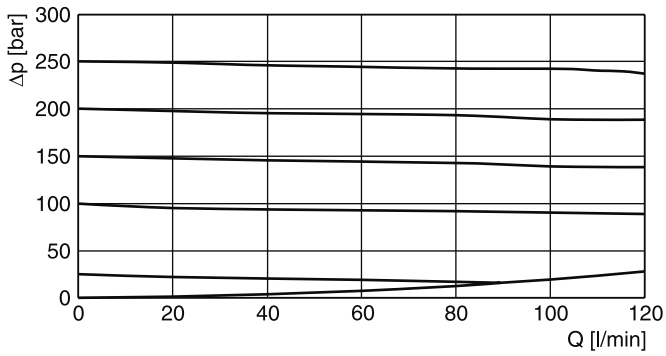

All characteristic curves measured with HLP46 at 50°C.

ZDR01

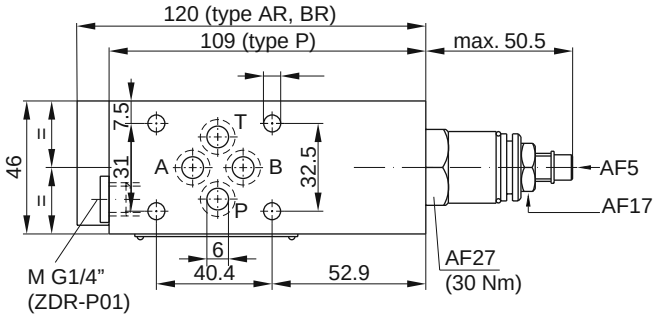

Seal kit	
Seal	**Order code**
1	098-91184-0
5	098-91185-0
Complete cartridge	
Pressure stage	**Order code**
1	098-91102-0
5	098-91103-0

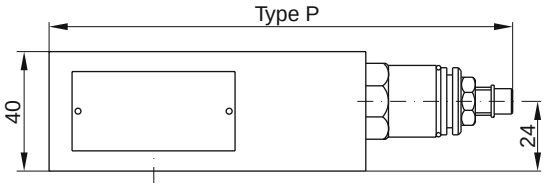

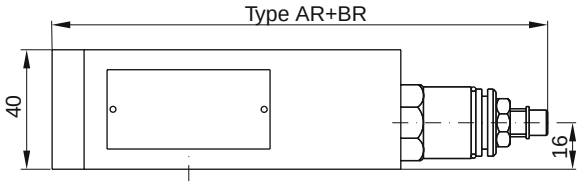

7

ZDR02

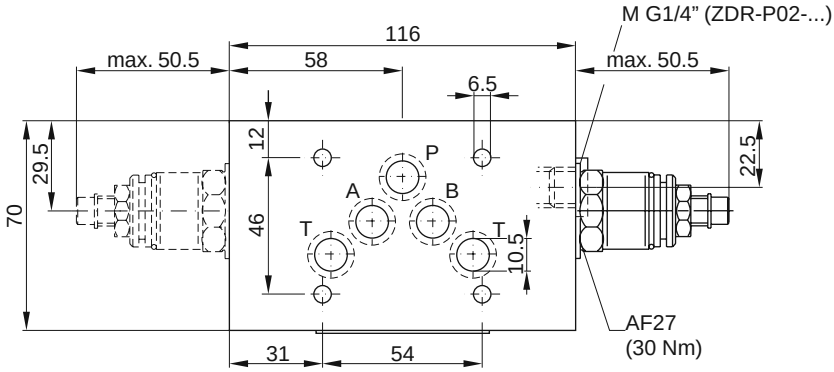

Seal kit	
Seal	**Order code**
1	098-91082-0
5	098-91083-0
Complete cartridge	
Pressure stage	**Order code**
1	098-91102-0
5	098-91103-0

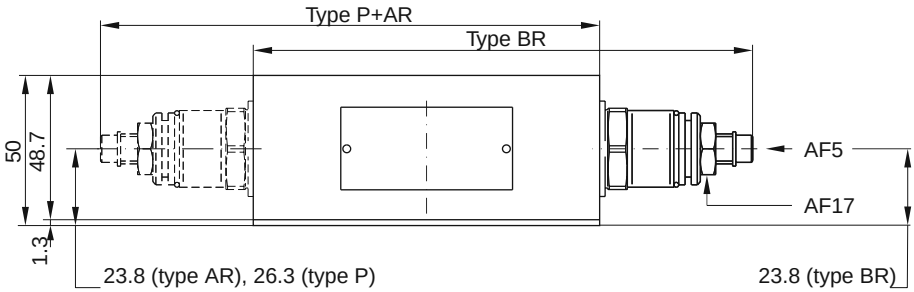

ZDR01

Pressure reducing in P
with pressure gauge port M

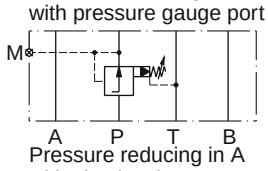

Series	Order No.
ZDR-P01-1-S0-D1	098-91179-0
ZDR-P01-5-S0-D1	098-91211-0

Pressure reducing in A
with check valve

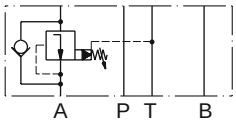

Series	Order No.
ZDR-AR01-1-S0-D1	098-91212-0
ZDR-AR01-5-S0-D1	098-91213-0

Pressure reducing in B
with check valve

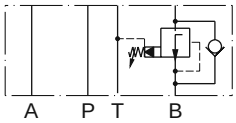

Series	Order No.
ZDR-BR01-1-S0-D1	098-91214-0
ZDR-BR01-5-S0-D1	098-91215-0

1 = 7 … 70 bar
5 = 7 … 315 bar

ZDR02

Pressure reducing at P
(with pressure gauge port M)

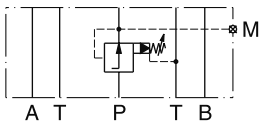

Series	Order No.
ZDR-P02-1-S0-D1	098-91050-0
ZDR-P02-5-S0-D1	098-91051-0

Pressure reducing at A
(with check valve)

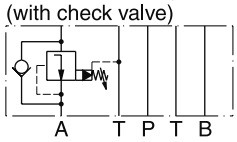

Series	Order No.
ZDR-AR02-1-S0-D1	098-91052-0
ZDR-AR02-5-S0-D1	098-91053-0

Pressure reducing at B
(with check valve)

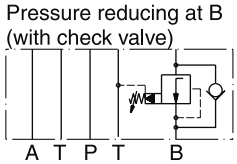

Series	Order No.
ZDR-BR02-1-S0-D1	098-91054-0
ZDR-BR02-5-S0-D1	098-91055-0

Proportional pressure reducing valves series PRPM keep a constant pressure p_{red} on the secondary side – independent of pressure fluctuations on the primary side. The integrated pressure relief function obviates the need for an additional pressure relief valve on the secondary side and reliefs to tank, if the reduced pressure rises above the setting pressure.

The proportional pressure reducing valve reduces the pressure in output port p_{red} in proportion to the solenoid current. The PRPM works practically independent of the inlet pressure. In non-activated mode, the connection to the tank is fully open with a min. pressure corresponding to the spring force.

The gauge port is connected to the secondary side. Types A and B have an integrated bypass check valve. The PRPM provides optimum performance in combination with a digital amplifier module PCD00A-400.

PRPM2PP

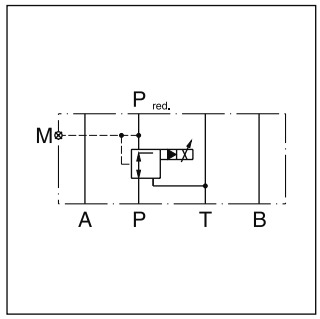

PRPM*PP

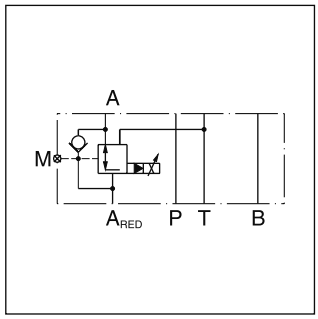

PRPM*AA

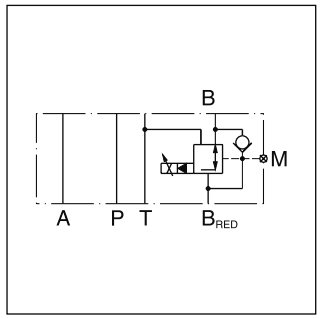

PRPM*BB

7

Ordering code

PRP	M				K	V
Proportional pressure reducing valve	Manapak	Nominal size	Reducing port	Pressure stage	Solenoid voltage 12 V, 1320 mA	Seal FPM

Code	Nominal size
2	NG06
3	NG10

Code	Port
AA	A
BB	B
PP	P

Code	Pressure stage [bar]
10	100
20	200
35	350

General			
Design		Pilot operated proportional pressure reducing valve	
Construction		Sandwich type	
Operation		Proportional solenoid	
Size		**NG06**	**NG10**
Mounting interface		ISO 4401	
Mounting position		unrestricted	
Ambient temperature	[°C]	-20 ... +60	
$MTTF_D$ value	[years]	75	
Weight	[kg]	2.0	3.2
Hydraulic			
Fluid		Hydraulic oil according to DIN 51524	
Fluid temperature	[°C]	-20 ... +70	
Viscosity, permitted	[cSt] / [mm²/s]	20 ... 400	
recommended	[cSt] / [mm²/s]	30 ... 80	
Max. operating pressure	[bar]	350	
Reduced nom. pressure	[bar]	100; 200; 350	
Max. flow	[l/min]	60	60
Pilot flow		see performance curves	
Filtration		ISO 4406 (1999); 18/16/13	
Resolution	[mA]	1 mA	
Repeatability	[%]	≤1 (with optimal dither signal)	
Hysteresis	[%]	≤4 (with optimal dither signal)	
Electrical			
Solenoid		Proportional solenoid, wet-pin push type, pressure tight	
Duty ratio	[%]	100 ED	
Protection class		IP65 in accordance with EN 60529 (with correctly mounted plug-in connector)	
Supply voltage	[V]	12 (1320 mA)	
Solenoid connection		Connector as per EN 175301-803	
Amplifier		PCD00A-400	

Pressure/flow NG06/NG10

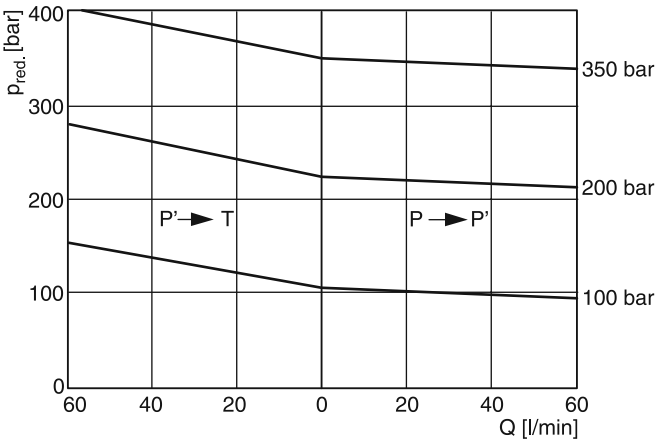

Pressure/adjustment at Q=0l/min (static)

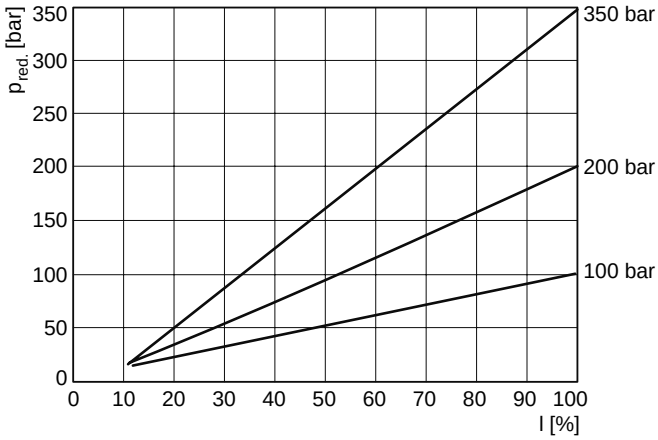

Pressure/flow (min. adjustable)

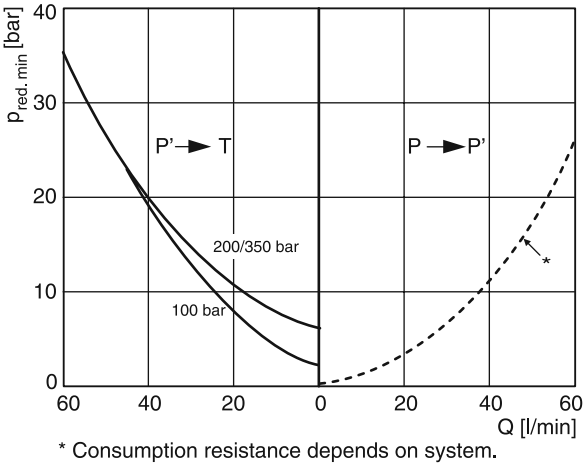

* Consumption resistance depends on system.

Pilot flow NG06/NG10

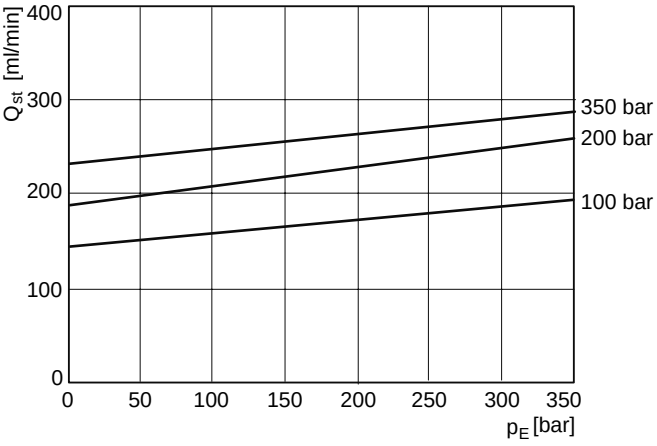

Pressure drop/flow over check valve

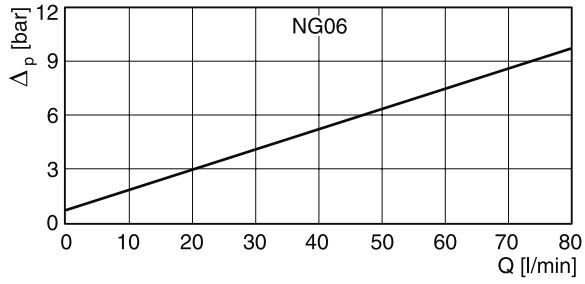

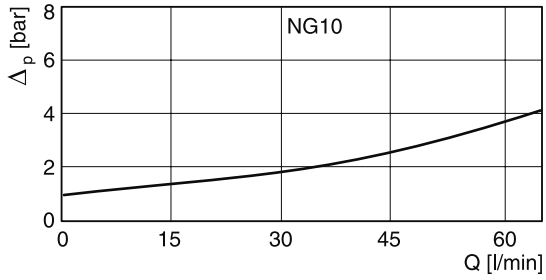

All characteristic curves measured with HLP46 at 50 °C.

PRPM2AA*, BB**

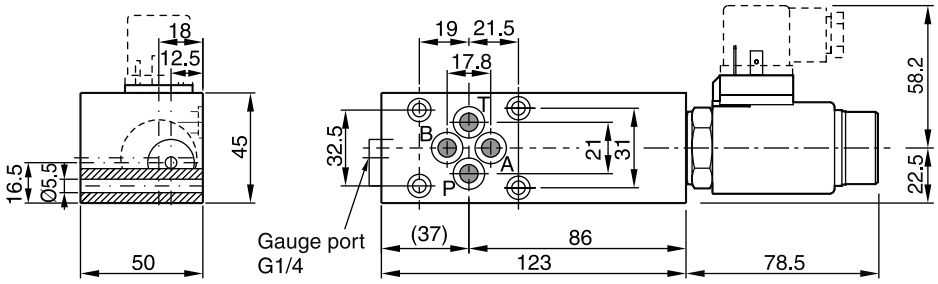

PRPM2PP*

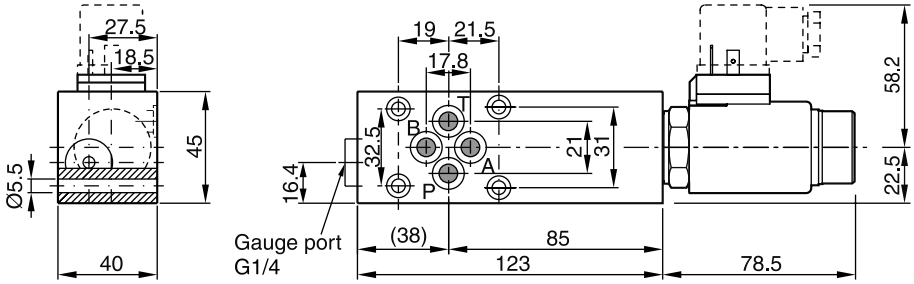

PRPM3AA*, BB**

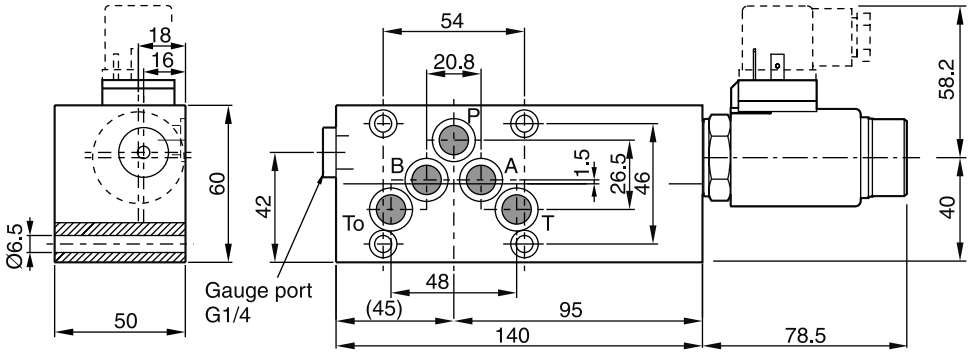

PRPM3PP*

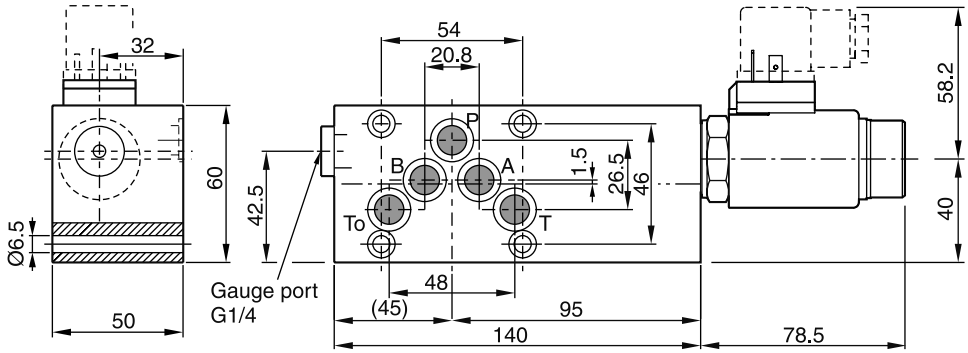

2-way pressure compensators in sandwich design maintain a constant pressure differential between ports P and A or P and B. Thus achieves a constant flow rate by a steady cross sectional opening of a directional control valve. The control pressure applied to the spring side of the compensator spool is supplied from port A or B via a shuttle valve. Flow rate regulation is automatically effective in the port with the highest pressure.

Application example

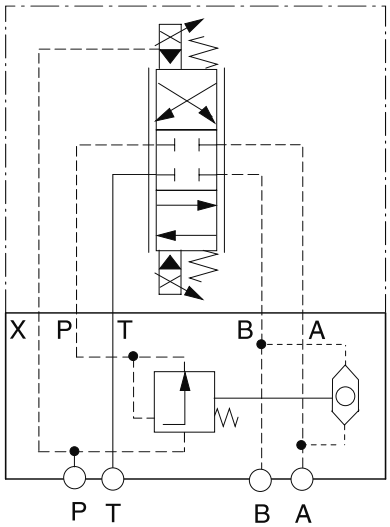

Proportional DC valve model D31FB with 2 way pressure compensator LCM3 maintains a constant flow rate.
The diagram shows the design according to code X.

Dimensions

LCM2

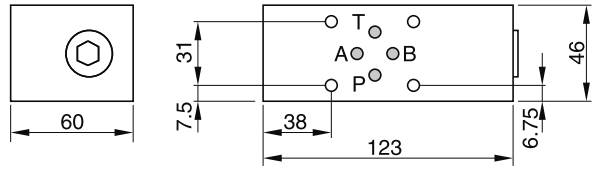

Mounting screws: BK 403 (4 x M5 x 90)
For mounting screws connected with the directional valves D1 or D31.

LCM3

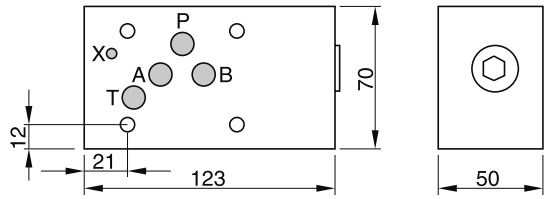

Mounting screws: BK 412 (4 x M6x 90)
The views show the mounting surface for the directional valve.

Ordering Code

LCM		PP		02	V	[ ]
Pressure compensator	Size	Control connection	Pilot oil	Differential pressure 10 bar	Seal FPM	Design series (not required for ordering)

Code	Size
2	NG06
3	NG10

Code	Pilot oil
omit	internal
X [1]	external

[1] NG10 only

Technical data

General		
Series	**LCM2**	**LCM3**
Size	**NG06**	**NG10**
Mounting interface	NFPA D03 CETOP 03	NFPA D05 CETOP 05
Ambient temperature [°C]	-20...+60	
$MTTF_D$ value [years]	150	
Hydraulic		
Max. operating pressure [bar]	350	350
Pressure differential [bar]	10	10
Fluid	Hydraulic oil according to DIN 51524	
Fluid temperature [°C]	-20...+70	
Viscosity, permitted [cSt] / [mm²/s]	20 ... 400	
Viscosity, recommended [cSt] / [mm²/s]	30 ... 80	
Filtration	ISO 4406 (1999); 18/16/13	

LCM UK.INDD CM 30.03.15

The sandwich type pressure compensators series SPC are typically used in combination with proportional directional control valves. The compensator keeps the pressure drop over the directional valve constant and thus provides load-independent flow to the actuator.

Features

- 2-way or 3-way pressure compensators
- Standard pressure differential 5 bar
- Adjustable differential (2...5 bar) and 10 bar - optional
- SPC01 - NG06 (CETOP 03)
  SPC02 - NG10 (CETOP 05)
  SPC03 - NG16 (CETOP 07)
  SPC06 - NG25 (CETOP 08)

SPC01 (2-way)

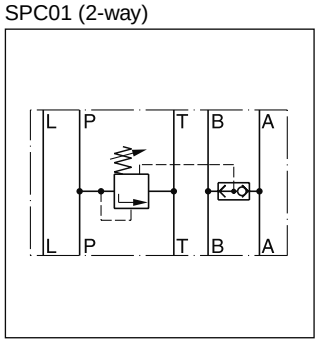

SPC01/02 (3-way)

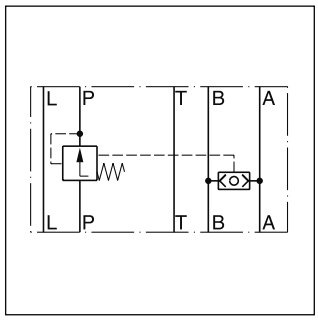

SPC01/02 (2-way)

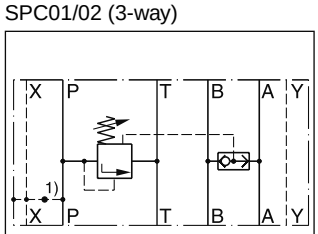

1) Plug for pilot connection (external or internal PP)

SPC03/06 (3-way)

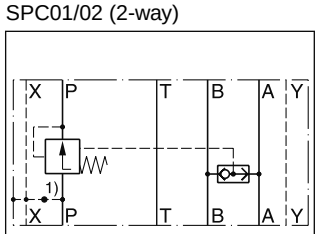

1) Plug for pilot connection (external or internal PP)

SPC03/06 (2-way)

Technical data

General					
Design		Direct operated pressure compensator			
Size		**NG06**	**NG10**	**NG16**	**NG25**
Mounting interface		DIN 24340 A6 ISO 4401 NFPA D03 CETOP 03	DIN 24340 A10 ISO 4401 NFPA D05 CETOP 05	DIN 24340 A16 ISO 4401 NFPA D07 CETOP 07	DIN 24340 A25 ISO 4401 NFPA D08 CETOP 08
Mounting position		unrestricted			
Ambient temperature	[°C]	-20...+60			
$MTTF_D$ value	[years]	150			
Weight 2-way pressure compensator	[kg]	1.5	3.1	8.3	11.9
Weight 3-way pressure compensator	[kg]	1.6	3.5	8.3	11.9
Hydraulic					
Max. operating pressure drain port L connected	[bar]	P, A, B: 350; T: 210; L: 10	P, A, B: 315; T: 210; L: 10	–	–
Max. operating pressure without drain port	[bar]	P, A, B: 350; T: 160; L: 160	P, A, B: 315; T: 210; L: 210	P, A, B, X: 350; T, Y: 105	P, A, B, X: 350; T, Y: 105
Nominal flow	[l/min]	30	80	200	400
Fluid		Hydraulic oil according to DIN 51524			
Fluid temperature	[°C]	-20...+70 (NBR: -25...+70)			
Viscosity permitted	[cSt] / [mm^2/s]	20 ... 400			
Viscosity recommended	[cSt] / [mm^2/s]	30 ... 80			
Filtration		ISO 4406 (1999); 18/16/13			

SPC UK.INDD CM 30.03.15

SPC01/02

SPC				1	C	5	A	
Direct operated pressure compensator	Nominal size	Function	Pressure differential	Circuit type	Load sensing port	Steel body	Design series	Seal

Code	Nominal size
01	NG06
02	NG10

Code	Function
01	3-way pressure compensation
11	2-way pressure compensation

Code	Pressure differential
04 [1]	2...5 bar adjustable
05	5 bar
10 [1]	10 bar

Code	Seal
1	NBR
5	FPM

SPC01

Type	Model no.	Order no.
3-way compensators with shuttle valve P-A/B	SPC 01 01 041C5A	026-42583-0
	SPC 01 01 051C5A	026-42584-0
	SPC 01 01 101C5A	026-42585-0
2-way compensators with shuttle valve P-A/B	SPC 01 11 051C5A	026-42560-0

SPC02

Type	Model no.	Order no.
3-way compensators with shuttle valve P-A/B	SPC 02 01 041C5A	026-42589-0
	SPC 02 01 051C5A	026-42590-0
	SPC 02 01 101C5A	026-42591-0
2-way compensators with shuttle valve P-A/B	SPC 02 11 051C5A	026-42566-0

7

[1] For 3-way compensator only.

SPC03/06

SPC					C	B	
Direct operated pressure compensator	Nominal size	Function	Pilot connection	Pressure differential	Load sensing port	Design series	Seal

Code	Nominal size
03	NG16
06	NG25

Code	Function
01	3-way pressure compensation
11	2-way pressure compensation

Code	Pressure differential
05	5 bar (Standard)
10	10 bar

Code	Pilot connection
P	internal pilot pressure
X	external pilot pressure

Code	Seal
1	NBR
5	FPM

SPC03

Type	Model no.	Order no.
3-way compensator with shuttle valve P-A/B	SPC 03 01 P05CB1	S26-59683-0
	SPC 03 01 X05CB1	S26-59709-0
2-way compensator with shuttle valve P-A/B	SPC 03 11 P05CB1	S26-59682-0
	SPC 03 11 P10CB1	S26-59677-0
	SPC 03 11 X05CB1	S26-59710-0
	SPC 03 11X10CB1	S26-59882-0

SPC06

Type	Model no.	Order no.
3-way compensator with shuttle valve P-A/B	SPC 06 01 P05CB1	S26-59685-0
	SPC 06 01 X05CB1	S26-59808-0
2-way compensator with shuttle valve P-A/B	SPC 06 11 P05CB1	S26-59684-0
	SPC 06 11 P10CB1	S26-59678-0
	SPC 06 11 X05CB1	S26-59711-0
	SPC 06 11 X10CB1	S26-59884-0

SPC01

Flow regulation example: 2-way pressure compensator at Δp = 5 bar

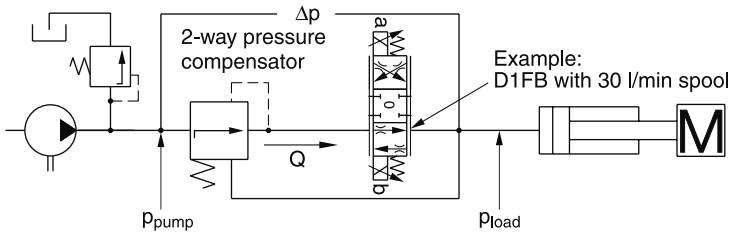

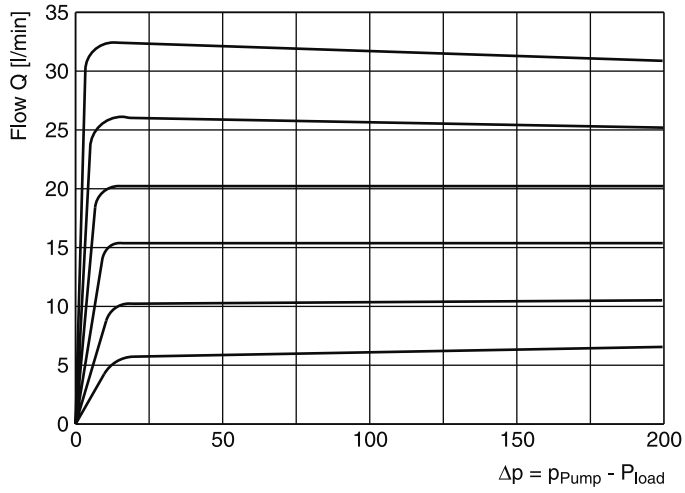

SPC02

Flow regulation example: 2-way pressure compensator at Δp = 5 bar

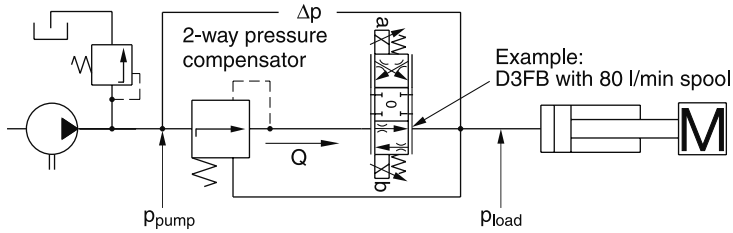

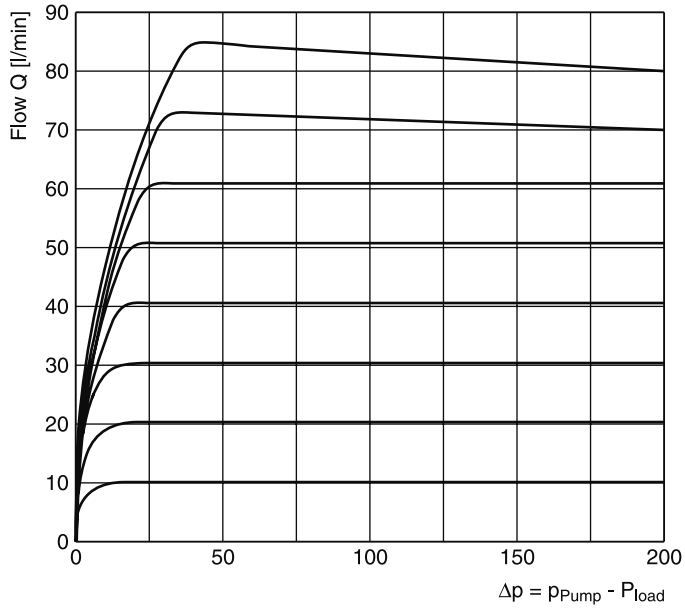

All characteristic curves measured with HLP46 at 50 °C.

SPC03

Flow regulation example: 2-way pressure compensator at Δp = 5 bar

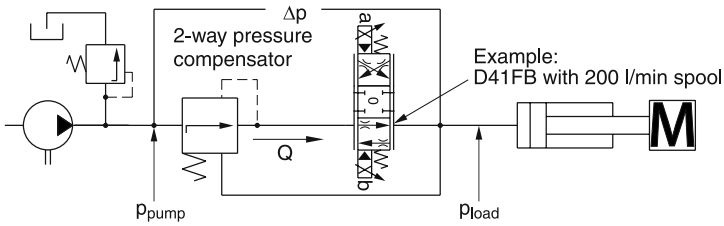

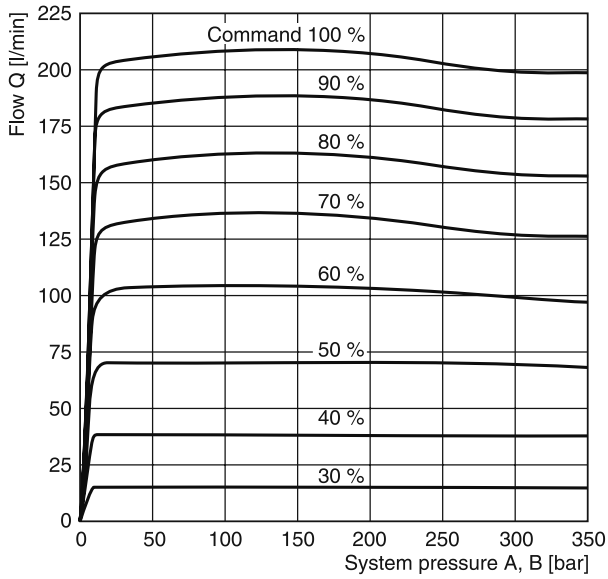

7

SPC06

Flow regulation example: 2-way pressure compensator at Δp = 5 bar

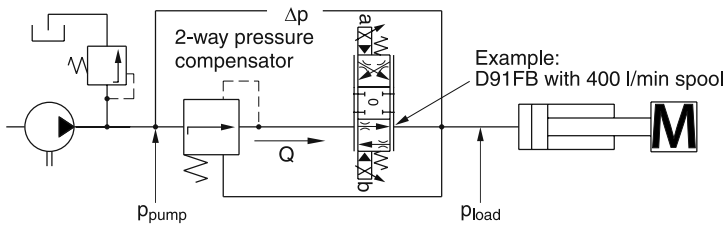

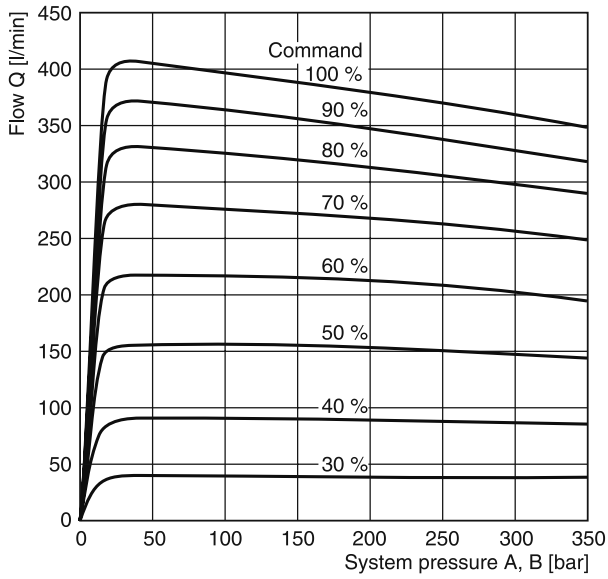

All characteristic curves measured with HLP46 at 50 °C.

2-way pressure compensator

SPC01 **SPC02**

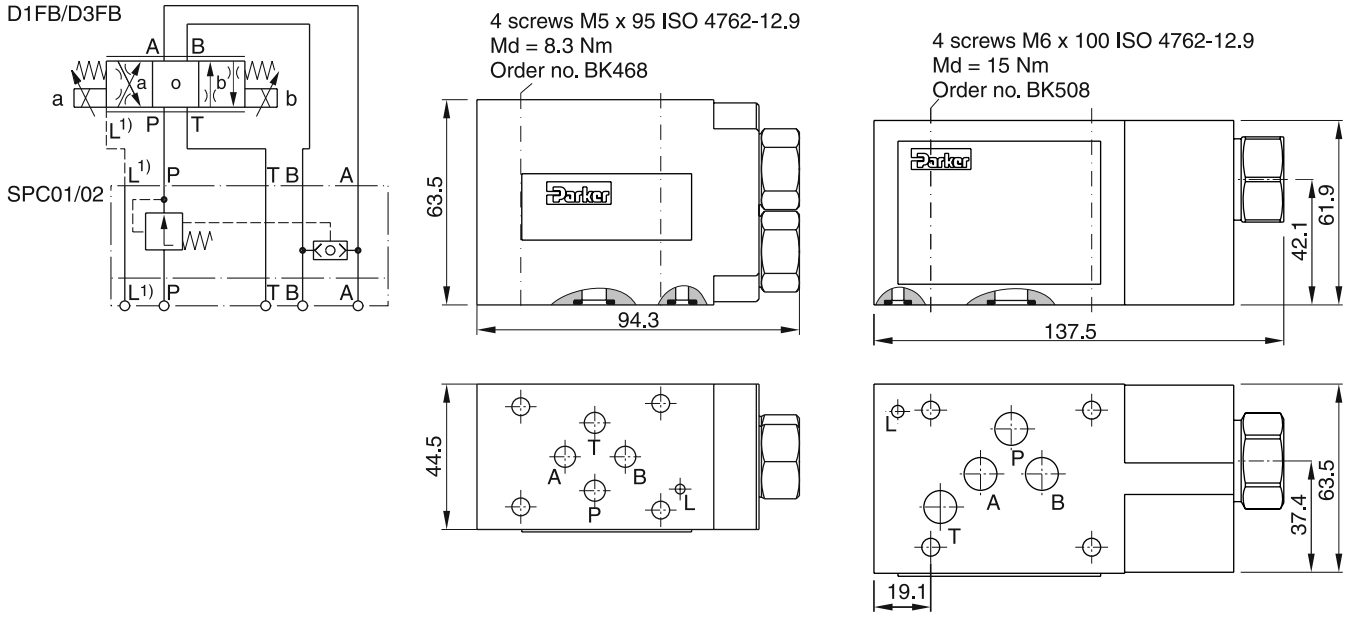

3-way pressure compensator

SPC01 **SPC02**

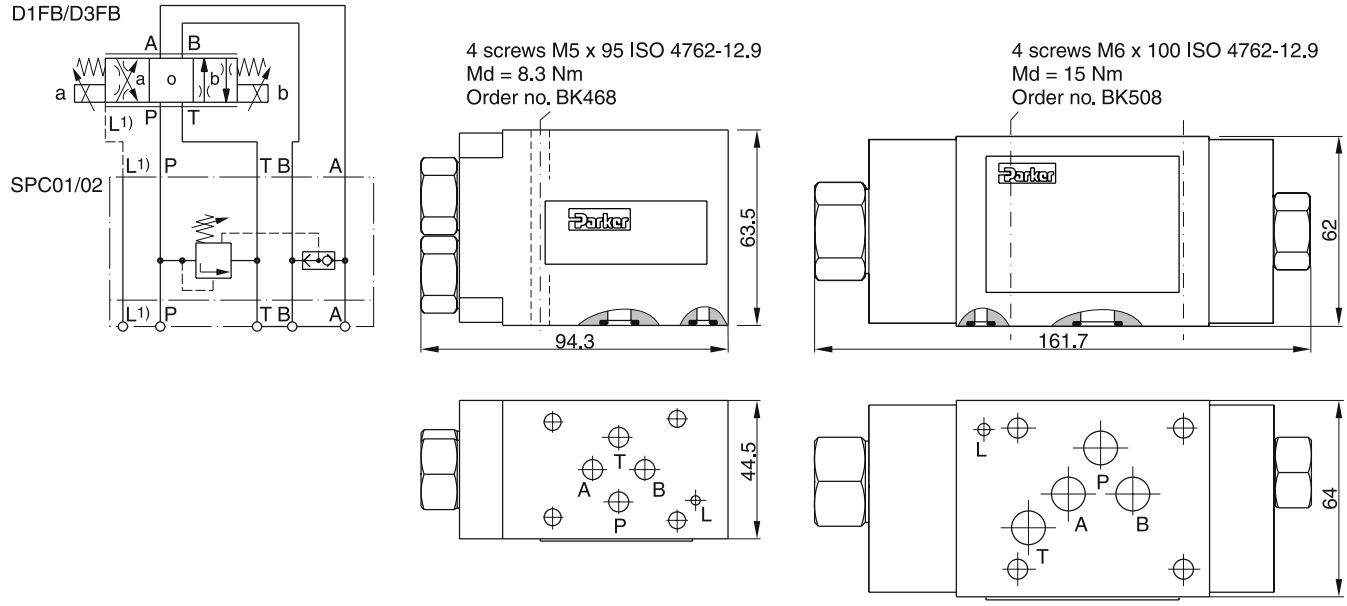

[1] Always connect L to tank when

SPC01 T > 160 bar
SPC02 T > 210 bar

2-way pressure compensator

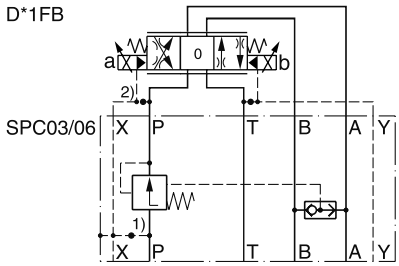

3-way pressure compensator

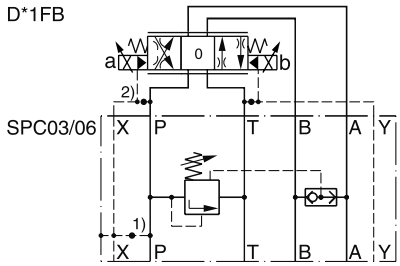

SPC03

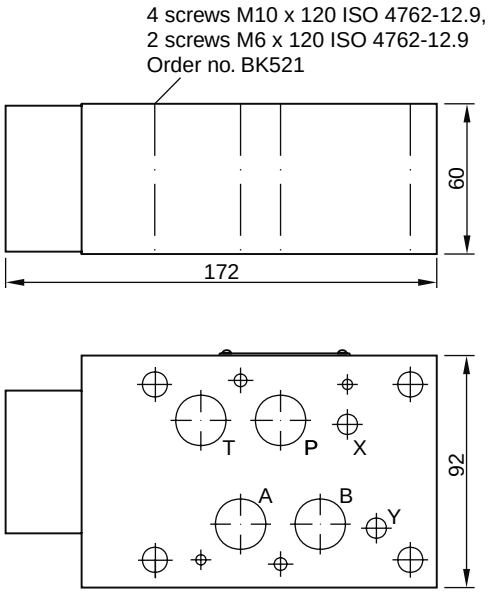

SPC06

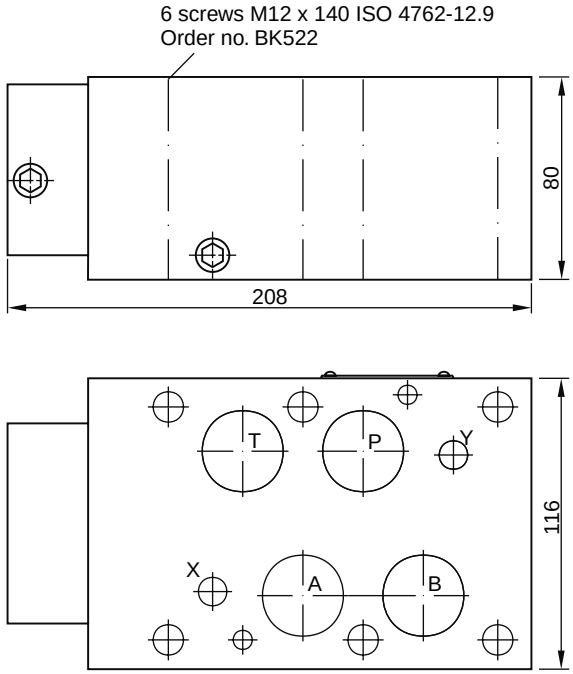

[1] Plug for pilot connection (external or internal PP).

[2] Plug in PX (obligatory for the use with pressure compensator).

Double-throttle check valves from the Parker Manapak series FM are in sandwich design for easy configuration of stack systems. Throttle and check valves are located in ports A and B.

FM2 and FM3 can be used as meter-in or meter-out throttle by changing the mounting position.

FM4 can be selected by ordering code as meter-in or meter-out throttle. FM6 is only available as meter-out control.

The throttle check valve can also be used to influence the switching time of pilot operated directional valves. In this case, the valve is positioned between the pilot stage (CETOP 03, NG06) and the main stage (CETOP 05, NG10 up to CETOP 10, NG32).

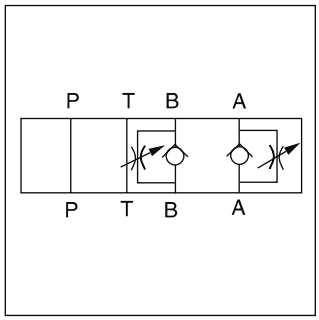

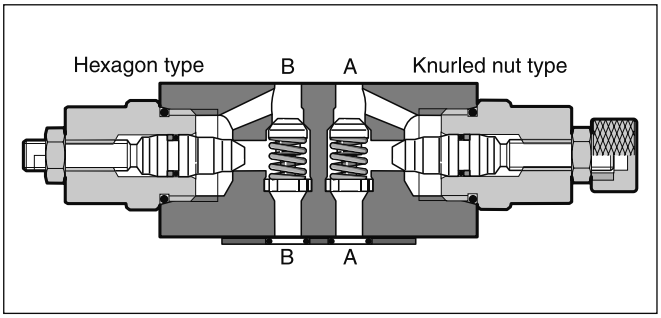

Features

- Two types of metering needle design can be selected when ordering FM2 and FM3 valves to achieve the throttle characteristics required to suit the application.
- Large bypass check valves allow high flow at low pressure drop.
- NG06 - FM2 (CETOP 03)
  NG10 - FM3 (CETOP 05)
  NG16 - FM4 (CETOP 07)
  NG25 - FM6 (CETOP 08)

7

Technical data

General					
Series		**FM2**	**FM3**	**FM4**	**FM6**
Size		**NG06**	**NG10**	**NG16**	**NG25**
Mounting interface		NFPA D03 CETOP 03	NFPA D05 CETOP 05	NFPA D07 CETOP07	NFPA D08 CETOP 08
Mounting position		unrestricted			
Ambient temperature	[°C]	-20...+60			
$MTTF_D$ value	[years]	150			
Weight	[kg]	1.3	2.4	5.4	7.9
Hydraulic					
Max. operating pressure	[bar]	350	350	350	210
Max. Flow	[l/min]	53	76	200	341
Opening pressure	[bar]	0.3	0.3	0.3	0.3
Meter-in throttle		•	•	•	—
Meter-out throttle		•	•	•	•
Fluid		Hydraulic oil according to DIN 51524			
Fluid temperature	[°C]	-20...+70			
Viscosity permitted	[cSt] / [mm²/s]	20...400			
Viscosity recommended	[cSt] / [mm²/s]	30...80			
Filtration		ISO 4406 (1999); 18/16/13			

Ordering Code

Series FM

FM		DD			V	
Throttle valve	**Valve size**	**Throttle check valve in the working port A and B**	**Needle design**	**Adjustment**	**Seal FPM**	**Design series** (not required for ordering)

Code	Size
2	**NG06**
3	**NG10**

Code	Adjustment
K	**Knob**
S	**Hexagon socket**

Code	Needle
omit	**Standard conical**
D	Fine, cylindrical Hollow bored with V notch

Bold letters =
Short-term availability

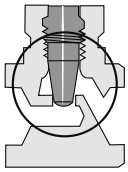	A two-stage needle provides fine adjustment in the lower flow range with 3 adjustment rotations. After 3 more rotations, the valve is completely open.
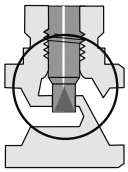	Design "D" A cylindrical needle with a V notch allows the fine adjustment over the entire setting range.

7

FM	4	DD		V	HT
Throttle valve	**Valve size NG16**	**Throttle check valve in the working port A and B**	**Meter-out / meter-in throttling**	**Seal FPM**	**Design series**

Code	Description
T	Meter-in
F	Meter-out

FM	6	DD	K	V	
Throttle valve	**Valve size NG25**	**Throttle check valve in the working port A and B**	**Adjusting knob**	**Seal FPM**	**Design series** (not required for ordering)

FM2 standard needle

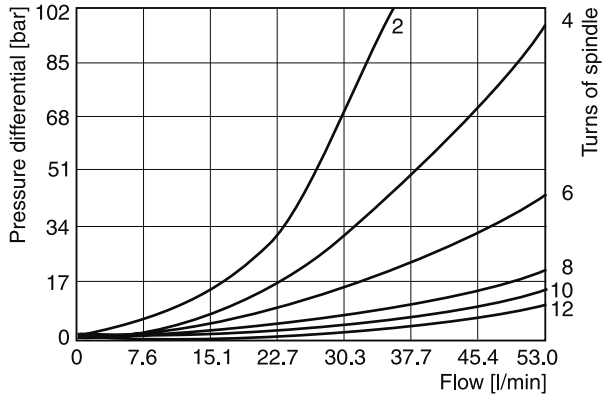

FM2D needle with V notch

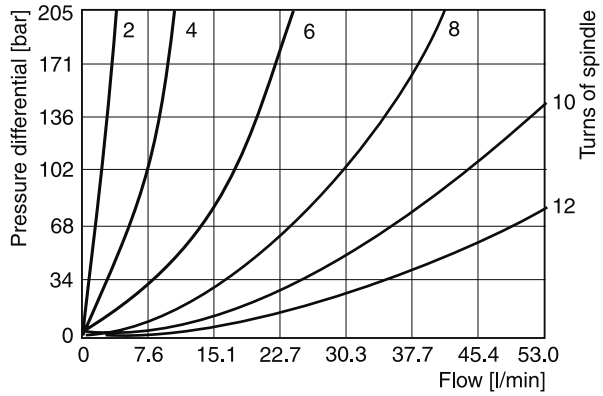

FM2 flow, check valve

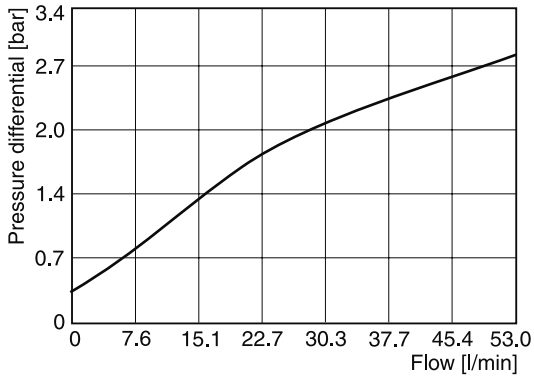

FM3 standard needle

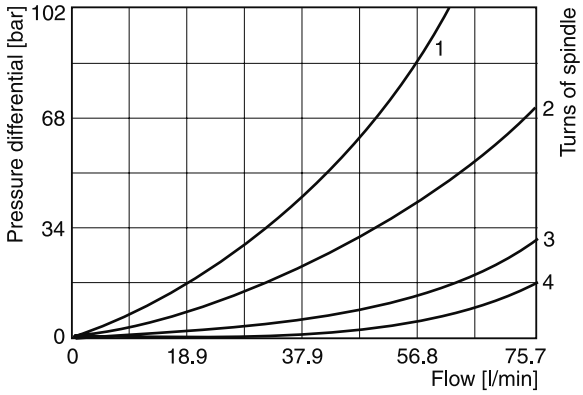

FM3D needle with V notch

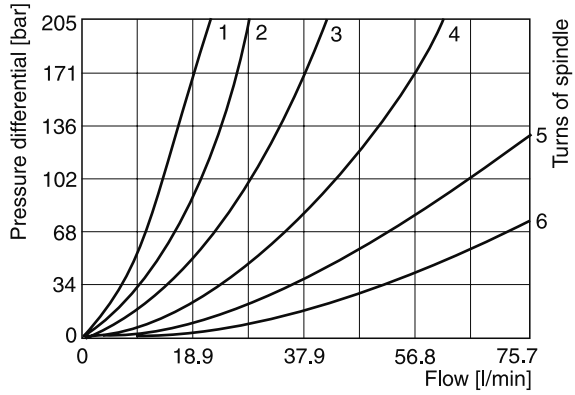

FM3 flow, check valve

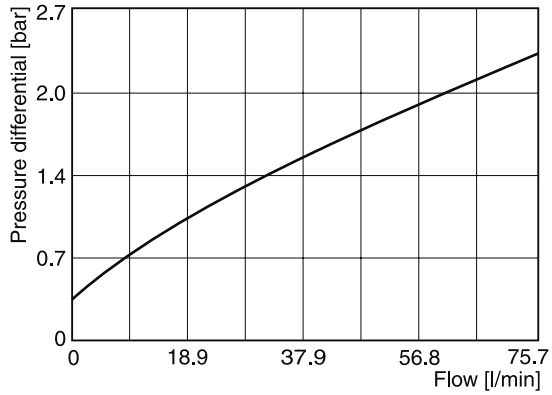

All characteristic curves measured with HLP46 at 50 °C.

FM4 with standard needle

1 to 5 number of needle rotations

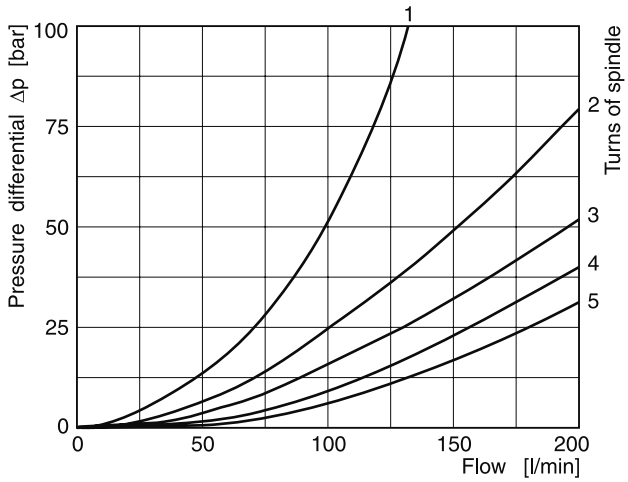

FM4 flow, check valve

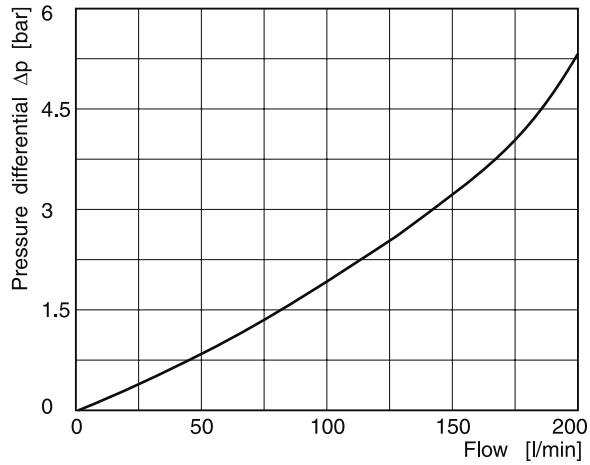

7

FM6 with standard needle

1 to 5 number of needle rotations

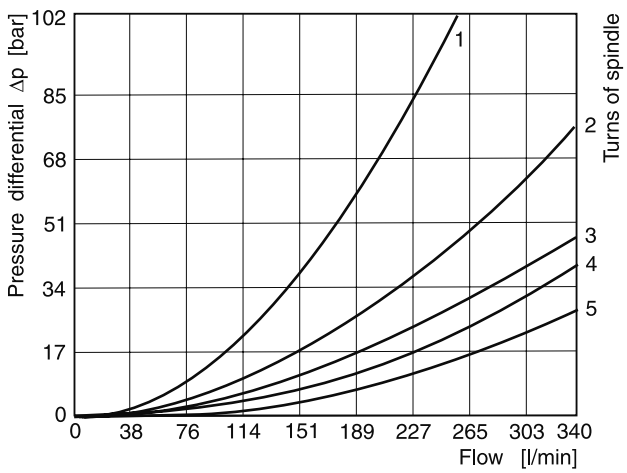

FM6 flow, check valve

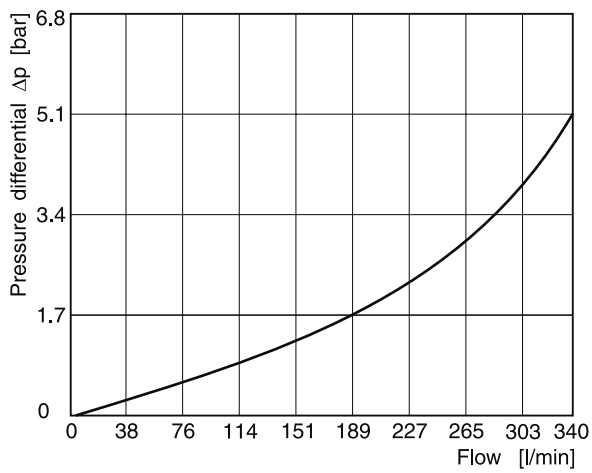

All characteristic curves measured with HLP46 at 50 °C.

FM2

Adjustment code K

Meter-in

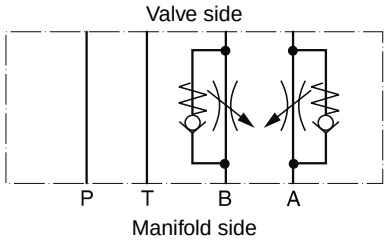

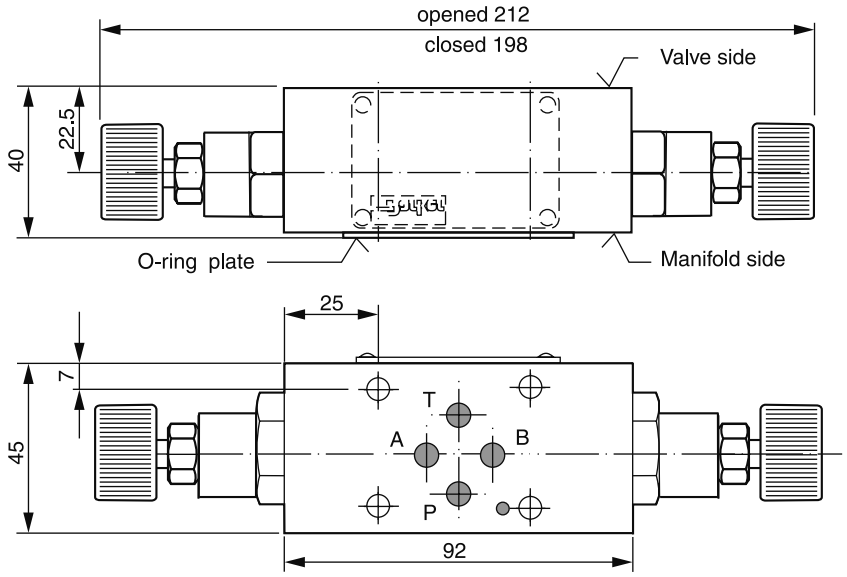

Meter-in or meter-out

A functional change is achieved by rotating the mounting position of the valve 180° about the longitudinal axis (A-B).

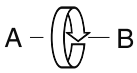

Meter-out

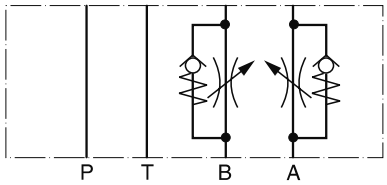

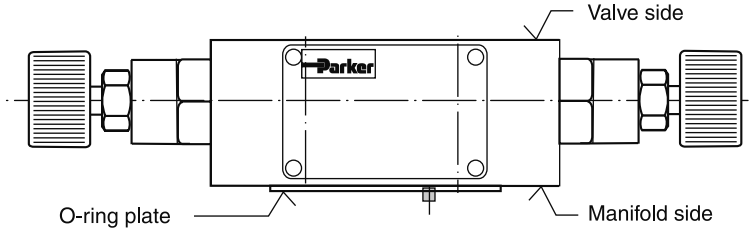

Adjustment code S
(Meter-out shown)

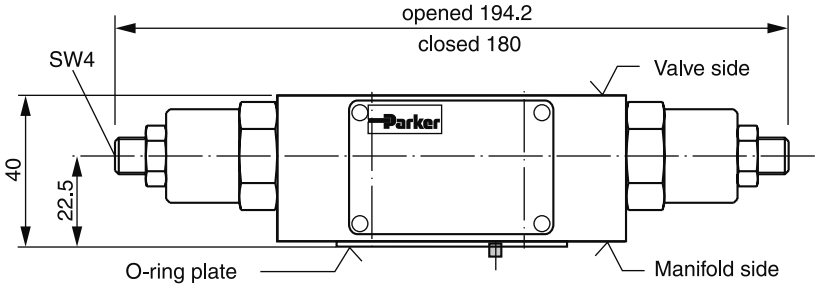

Seal kit FM2	
Seal	**Order code**
V	SK-FM2-V-20

Note:

The O-ring plate (with O-rings) for sealing the connecting surface of the manifold side is included. The O-ring and positioning pin are always mounted on the manifold side.

FM3

Adjustment code K

Meter-in

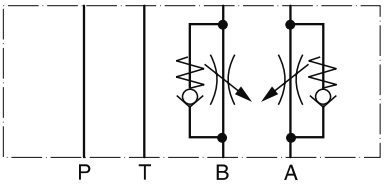

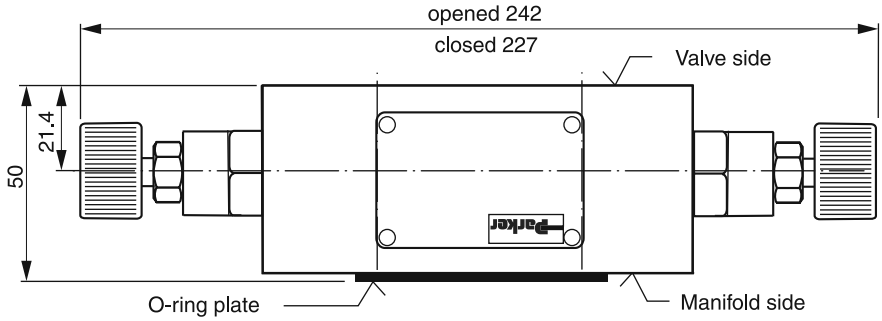

Meter-in or meter-out

A functional change is achieved by rotating the mounting position of the valve 180º about the transverse axis (P).

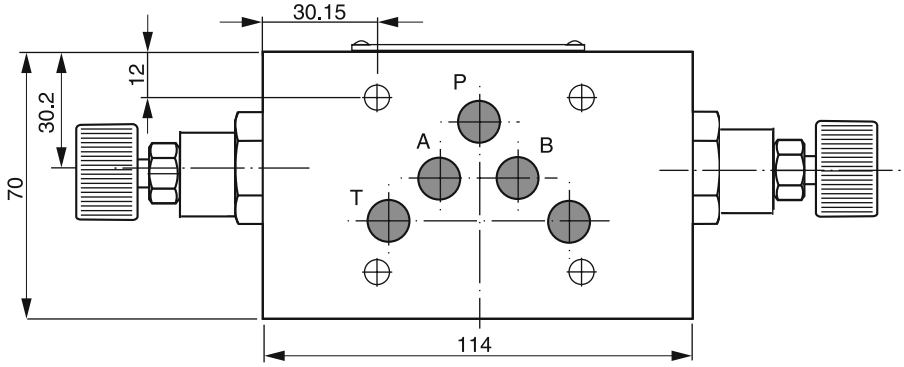

Meter-out

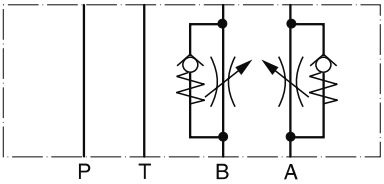

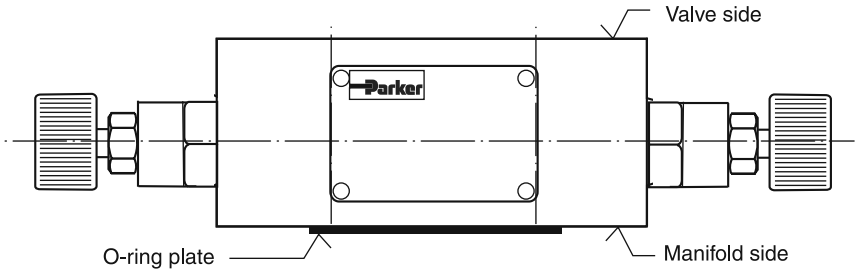

Adjustment code S
(Meter-out shown)

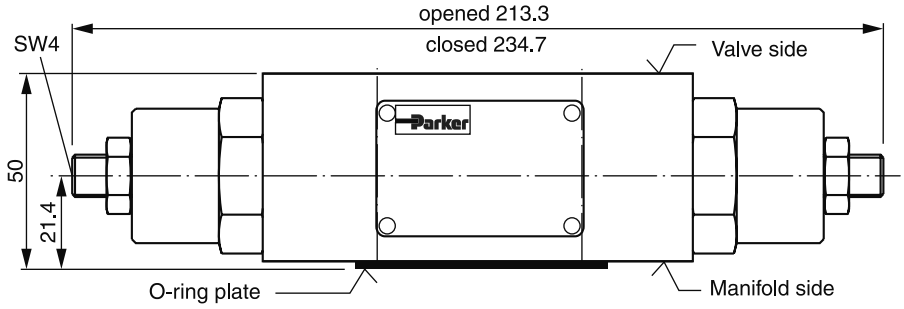

Seal kit FM3	
Seal	**Order code**
V	SK-FM3-V-20

Note:

The O-ring plate (with O-rings) for sealing the connecting surface of the manifold side is included. The O-ring and positioning pin are always mounted on the manifold side.

FM4

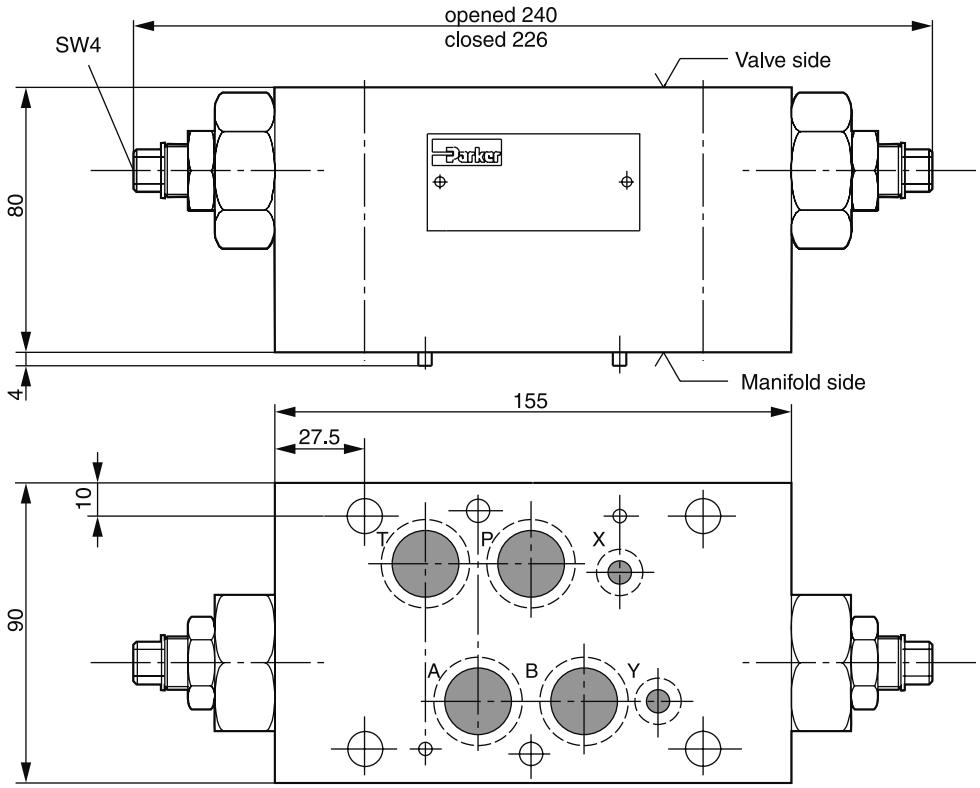

Meter-in

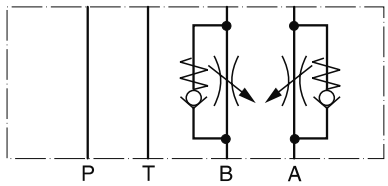

Meter-out

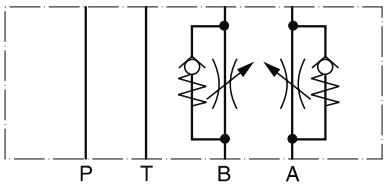

Seal kit FM4	
Seal	**Order code**
V	SK-FM4VHT

FM6

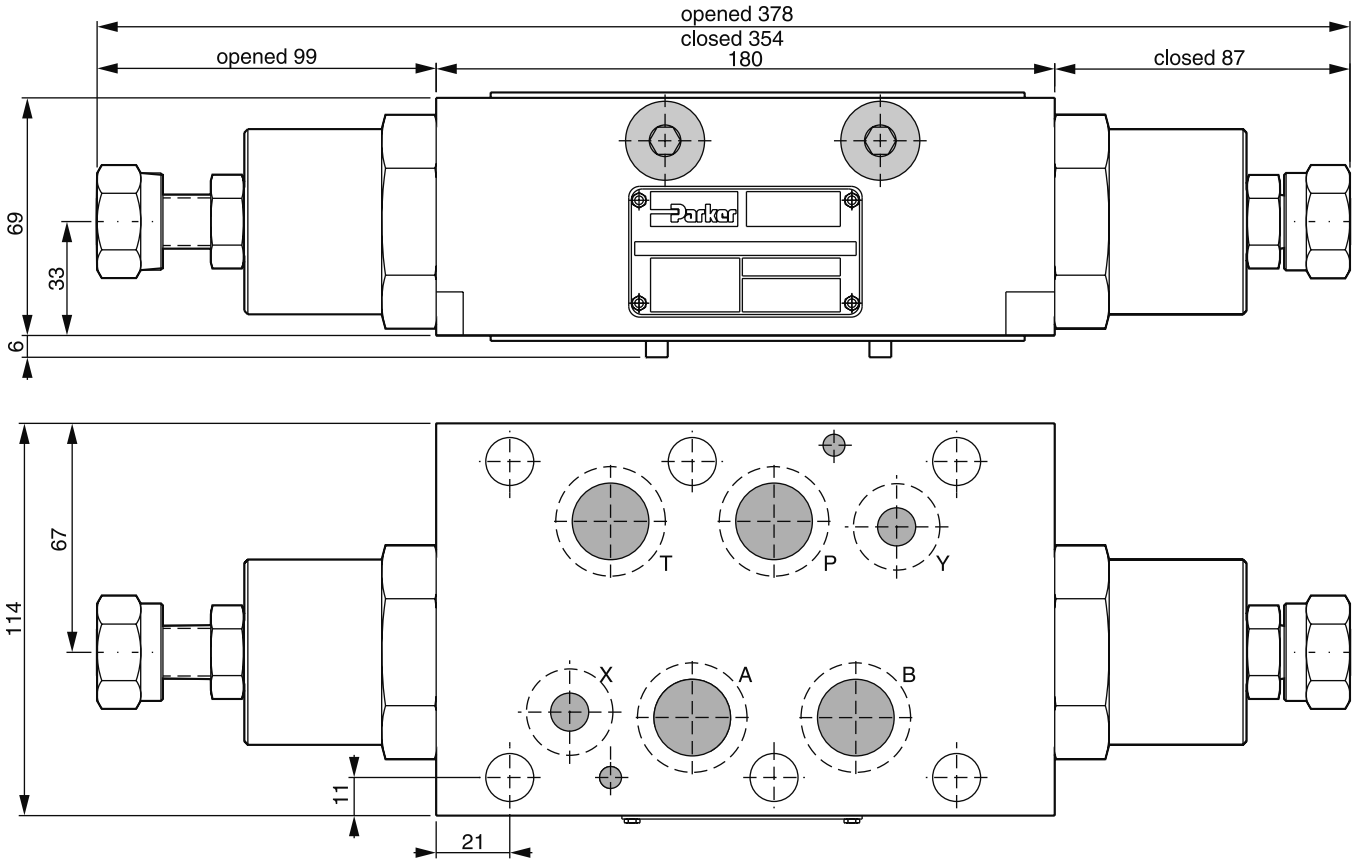

Meter-out

Adjustment: knob

Meter-in is not available for FM6

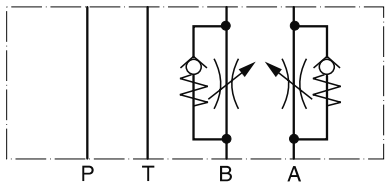

Seal kit FM6	
Seal	**Order code**
V	SK-FM6-V-12

Throttle check valves series ZRD are designed for maximum flow rates.

The throttle check function can be located in port A or B as well as in A + B. Meter-in or meter-out functionality can be selected by model code.

A low flow / high resolution version in NG06 for sensitive shifting time adjustment of pilot operated directional control valves is available on request.

ZRD-ABZ01

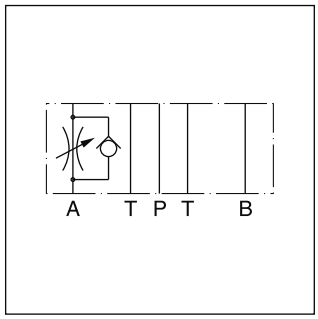

ZRD-AA02

Features

- High flow capacity
- Various functional arrangements
- ZRD01 - NG06 (CETOP 03)
  ZRD02 - NG10 (CETOP 05)

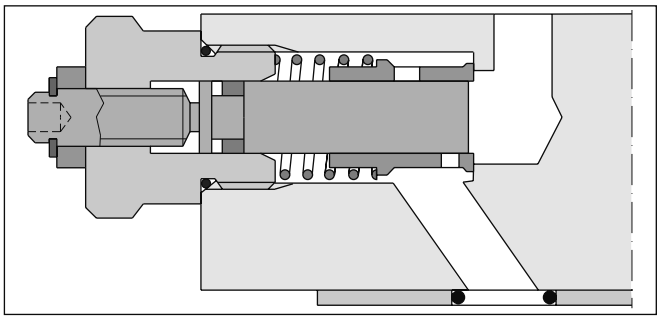

ZRD-AA02

Ordering code

ZRD – [ ] [ ] – **S0** – **D** [ ]

ZRD	[ ]	[ ]	S0	D	[ ]
Throttle valve with check	Pressure control	Nominal size	Hexagon screw with lock nut	Design series	Seal

Code	Pressure control
AA	Meter-out control in A
AZ	Meter-in control in A
BA	Meter-out control in B
BZ	Meter-in control in B
ABA	Meter-out control in A and B
ABZ	Meter-in control in A and B

Code	Seal
1	NBR
5	FPM

Code	Nominal size
01	NG06
02	NG10

Ordering code details see end of chapter.

Technical data

General			
Size		**NG06**	**NG10**
Mounting interface		DIN 24340 A6 ISO 4401 NFPA D03	DIN 24340 A10 ISO 4401 NFPA D05
		CETOP RP 121	
Mounting position		unrestricted	
Ambient temperature	[°C]	-20...+60	
$MTTF_D$ value	[years]	150	
Weight 1 cartridge	[kg]	1.2	2.8
2 cartridges	[kg]	1.3	2.9
Hydraulic			
Max. operating pressure	[bar]	350	315
Nominal flow	[cSt] / [l/min]	80	160
Leakage	[cSt] / [l/min]	0.1...0.2 (at closed throttle)	0.1...0.2 (at closed throttle)
Opening pressure	[bar]	0.7	0.7
Fluid		Hydraulic oil according to DIN 51524	
Fluid temperature	[°C]	-20...+70 (NBR: -25...+70)	
Viscosity, permitted	[cSt] / [mm^2/s]	20 ... 400	
recommended	[cSt] / [mm^2/s]	30 ... 80	
Filtration		ISO 4406 (1999); 18/16/13	

p/Q performance curves

ZRD*01

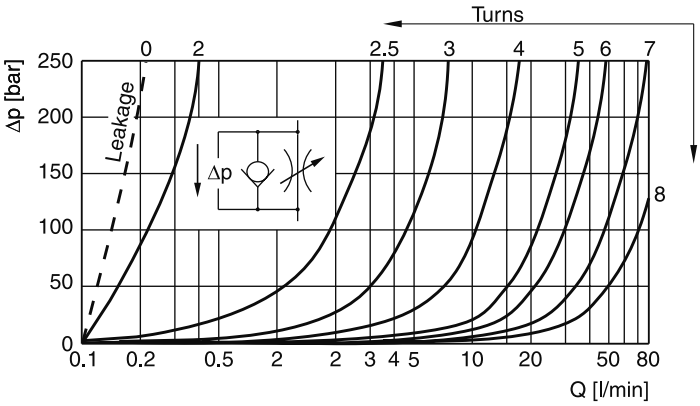

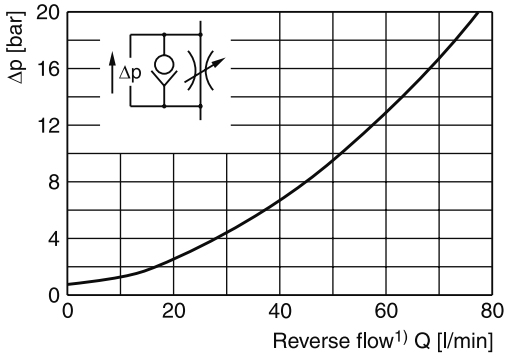

ZRD*02

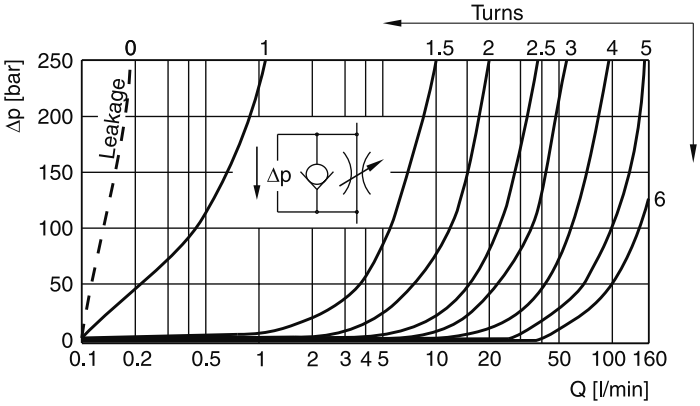

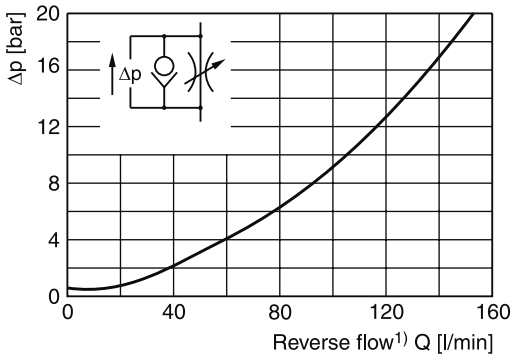

All characteristic curves measured with HLP46 at 50 °C.

[1] Throttle closed.

ZRD*01

Seal kit	
Seal	**Order code**
1	098-91096-0
5	098-91097-0
Complete cartridge	
Order code 098-91119-0	
O-ring plate	
Order code S26-27553-0	

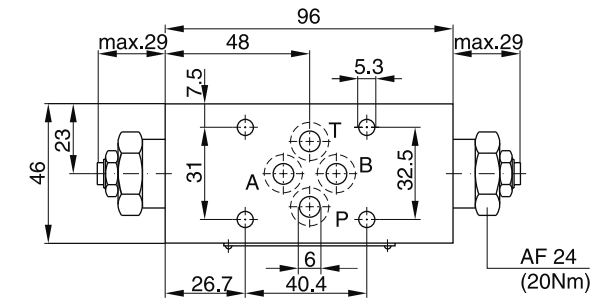

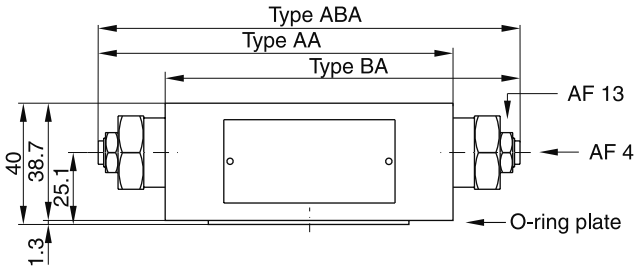

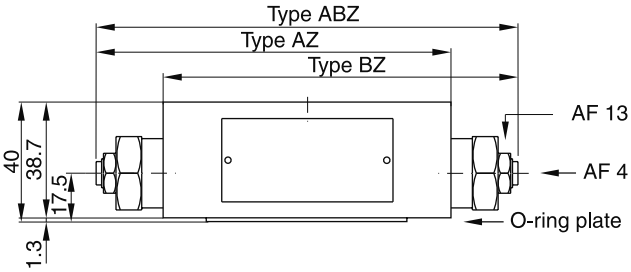

7

ZRD*02

Seal kit	
Seal	**Order code**
1	098-91098-0
5	098-91099-0
Complete cartridge	
Order code 098-91120-0	
O-ring plate	
Order code S16-85742-0	

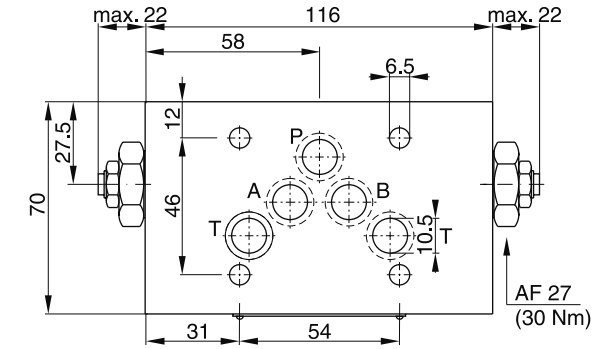

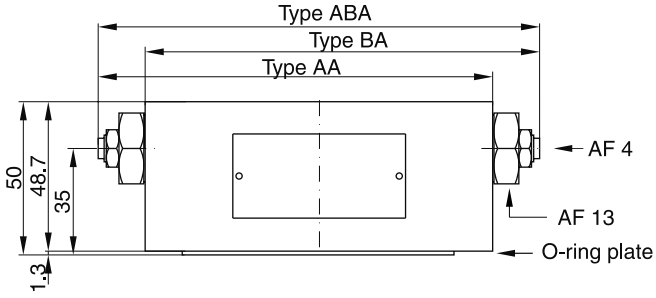

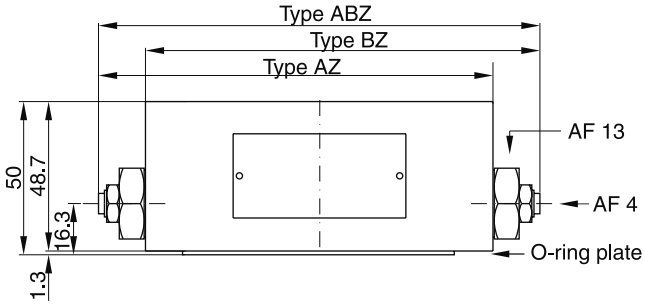

ZRD*01

Meter-in control in A

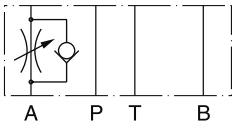

Series ZRD-AZ01-S0-D1 — Order No. 098-91056-0

Meter-out control in B

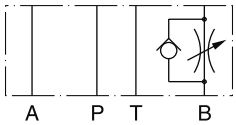

Series ZRD-BA01-S0-D1 — Order No. 098-91013-0

Meter-in control in B

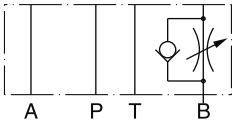

Series ZRD-BZ01-S0-D1 — Order No. 098-91057-0

Meter-in control in A and B

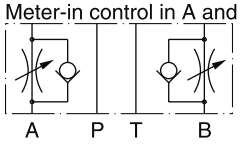

Series ZRD-ABZ01-S0-D1 — Order No. 098-91058-0

Meter-out control in A

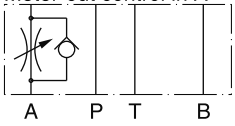

Series ZRD-AA01-S0-D1 — Order No. 098-91012-0

Meter-out control in A and B

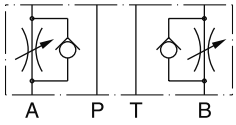

Series ZRD-ABA01-S0-D1 — Order No. 098-91014-0

ZRD*02

7

Meter-in control in A

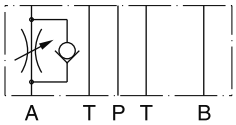

Series ZRD-AZ02-S0-D1 — Order No. 098-91059-0

Meter-out control in B

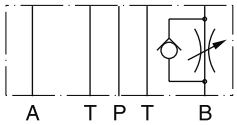

Series ZRD-BA02-S0-D1 — Order no. 098-91016-0

Meter-in control in B

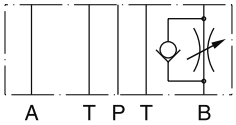

Series ZRD-BZ02-S0-D1 — Order No. 098-91060-0

Meter-in control in A and B

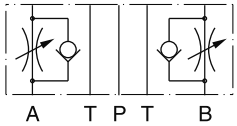

Series ZRD-ABZ02-S0-D1 — Order no. 098-91061-0

Meter-out control in A

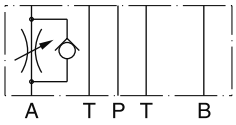

Series ZRD-AA02-S0-D1 — Order no. 098-91015-0

Meter-out control in A and B

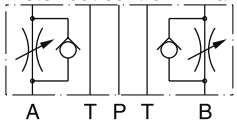

Series ZRD-ABA02-S0-D1 — Order no. 098-91017-0

Check valves from the Parker Manapak series CM are in sandwich design for easy configuration of stack systems. Depending on the function required, one or two check valves are arranged in ports P, T, A, and B. Number and flow direction can be selected from the ordering code.

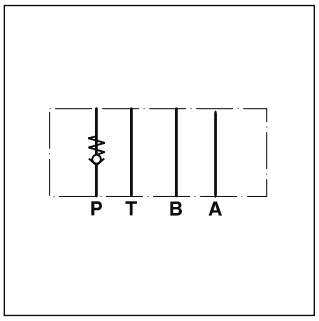

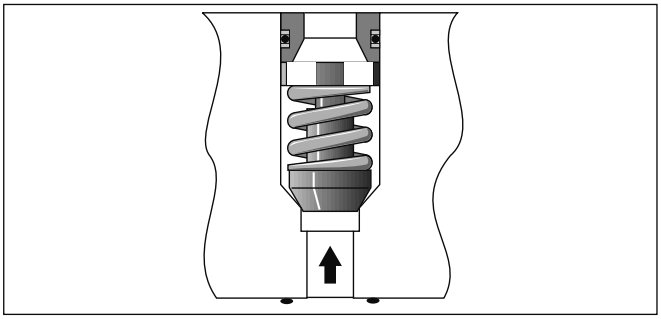

Features

- The valve bodies of the Parker Manapak valve series CM are made of steel.
- Eight options for the arrangement of the check valve in the body offer a multitude of uses for hydraulic switching.
- The function can be changed by turning the valve.
- CM2 - NG06 (CETOP 03)
  CM3 - NG10 (CETOP 05)

Ordering code

CM			V	
Check valve	Nominal size	Port	Seal FPM	Design series (not required for ordering)

Code	Nominal size
2	**Intermediate plate DIN NG06**
3	**Intermediate plate DIN NG10**

Code	Free flow polarity	Check valve in channel
AA	**From directional valve to manifold**	**A**
BB	**From directional valve to manifold**	**B**
DD	**From directional valve to manifold**	**A and B**
PP	**From manifold to directional valve**	**P**
TT	**From directional valve to manifold**	**T**
AAF	From manifold to directional valve	A
BBF	From manifold to directional valve	B
DDF	From manifold to directional valve	A and B

Bold letters =
Short-term availability

Technical data

General			
Series		**CM2**	**CM3**
Size		**NG06**	**NG10**
Mounting interface		DIN 24340 A6 ISO 4401 NFPA D03	DIN 24340 A10 ISO 4401 NFPA D05
Mounting position		unrestricted	
Ambient temperature	[°C]	-20...+60	
$MTTF_D$ value	[years]	150	
Weight	[kg]	0.9	1.7
Hydraulic			
Max. operating pressure	[bar]	350	350
Max. flow	[l/min]	53	76
Opening pressure	[bar]	0.3	0.3
Fluid		Hydraulic oil according to DIN 51524	
Fluid temperature	[°C]	-20...+70	
Viscosity , permitted	[cSt] / [mm²/s]	20...400	
recommended	[cSt] / [mm²/s]	30...80	
Filtration		ISO 4406 (1999); 18/16/13	

Schematics

The valve side is shown at the top of the symbols, the manifold side with channel designation is shown at the bottom.

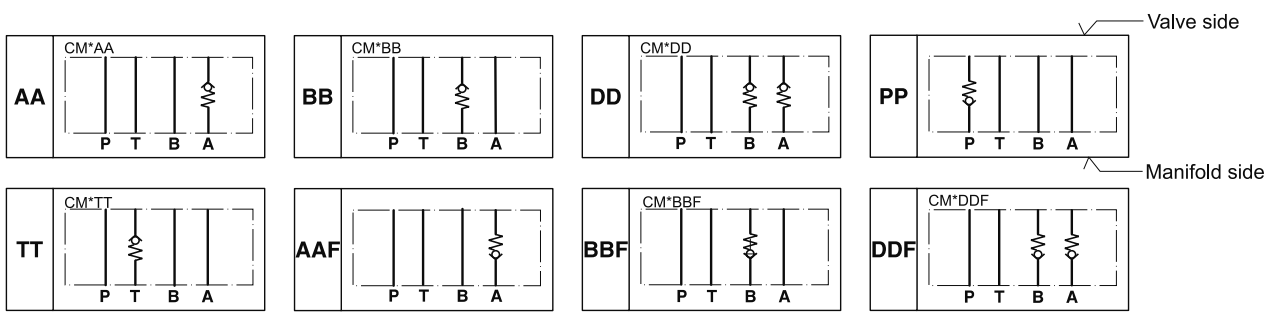

Δp/Q performance curves

CM2

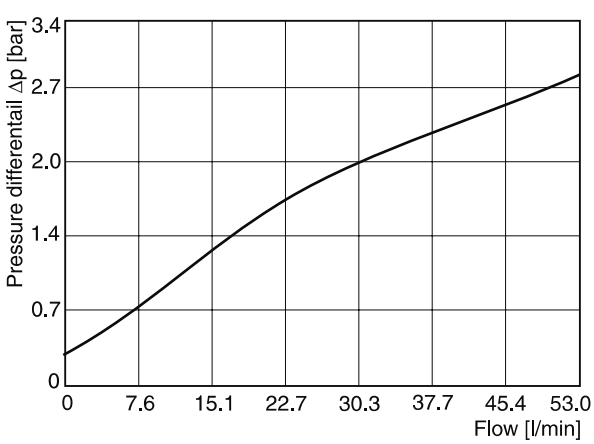

CM3

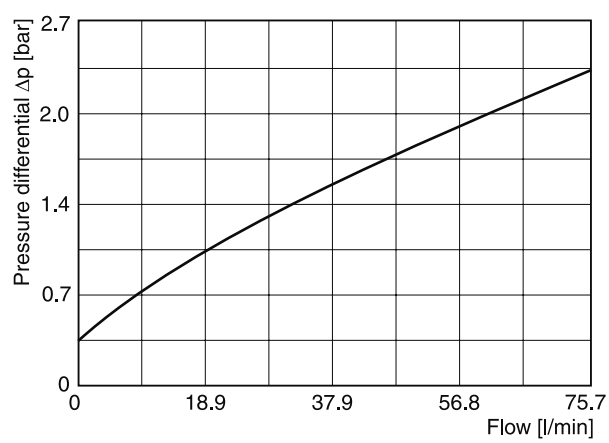

All characteristic curves measured with HLP46 at 50 °C.

CM2

Bottom view[1)]

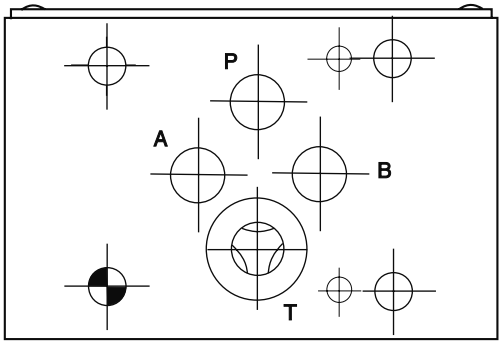

Front side

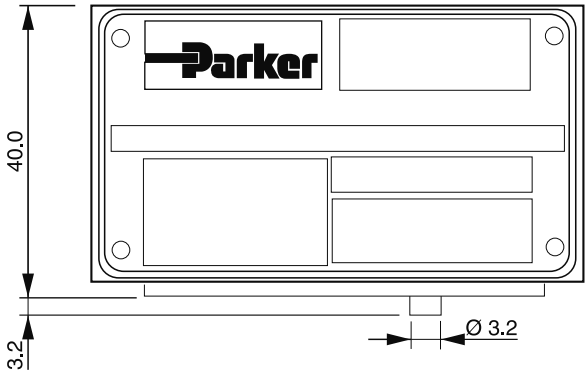

Top view

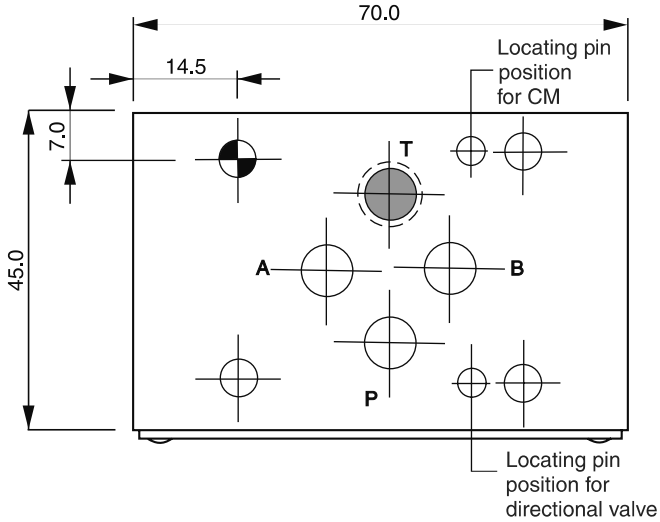

Seal kit CM2	
Seal	**Order code**
V	SK-CM2-V

Note:

The O-ring plate for sealing the connecting surface of the manifold side is included. The O-ring plate and the positioning pin are always mounted on the manifold side.

[1)] O-Ring plate is not shown! This view shows the TT model.

CM2 top views (from directional valve side)

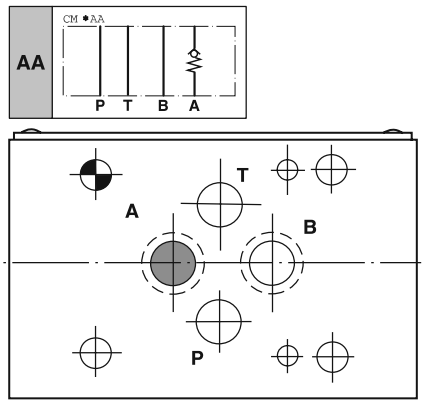

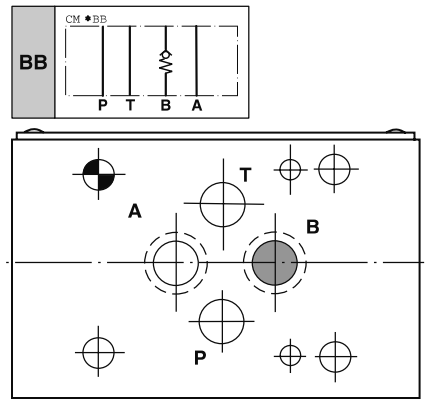

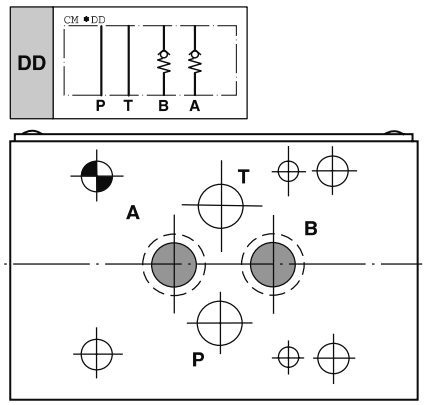

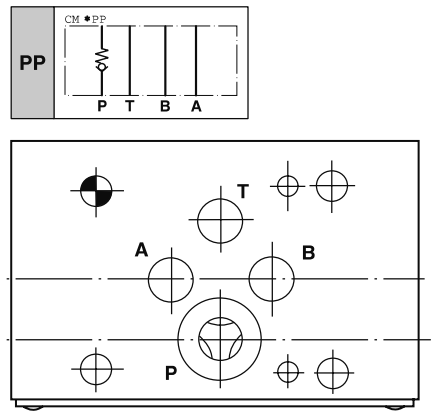

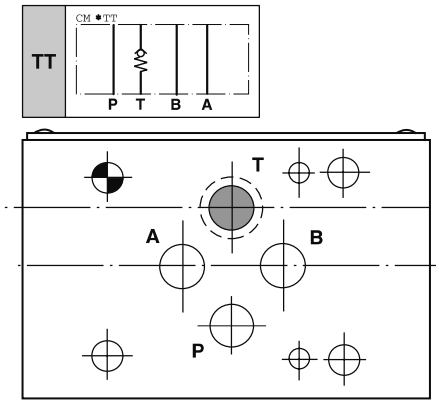

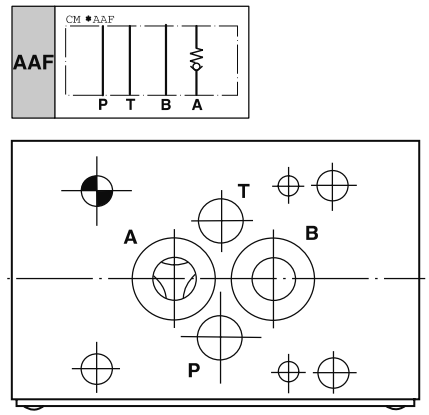

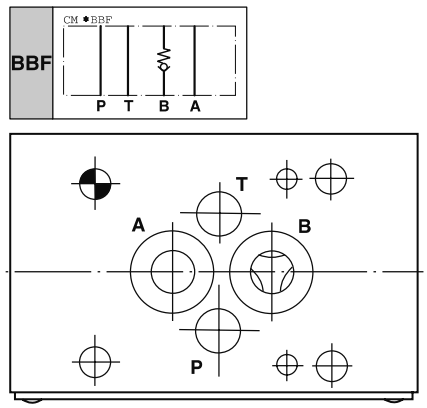

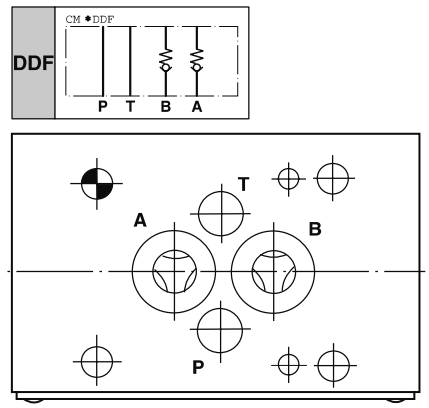

CM3

Bottom view[1)]

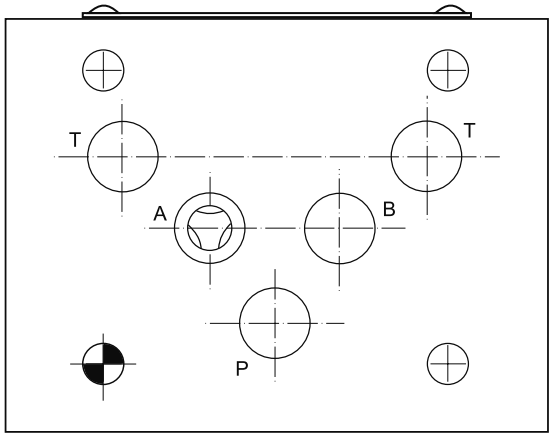

Front side

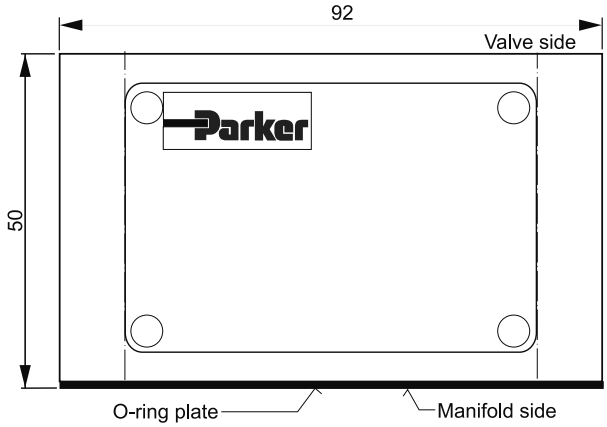

Top view

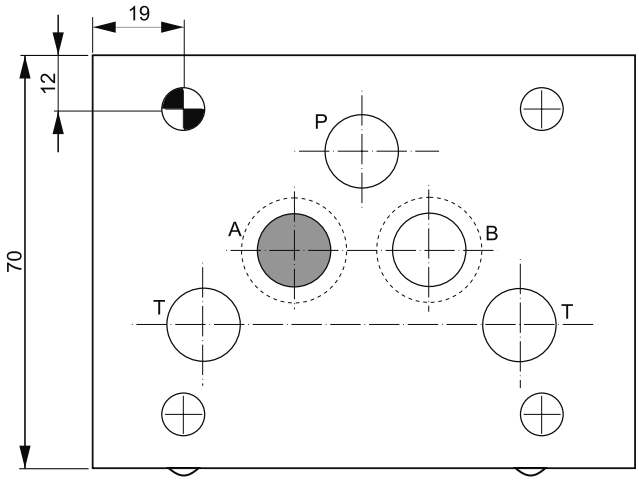

Seal kit CM3	
Seal	**Order code**
V	SK-CM3-V

Note:

The O-ring plate for sealing the connecting surface of the manifold side is included. The O-ring plate and the positioning pin are always mounted on the manifold side.

[1)] O-ring plate is not shown! This view shows the AA model.

CM3 top views (from directional valve side)

AA

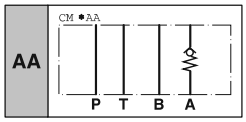

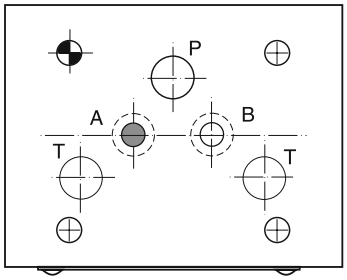

BB

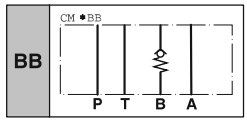

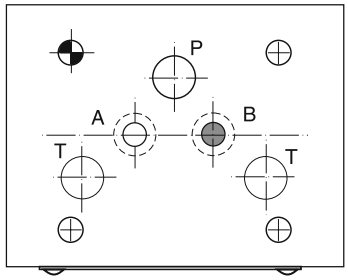

DD

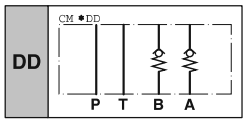

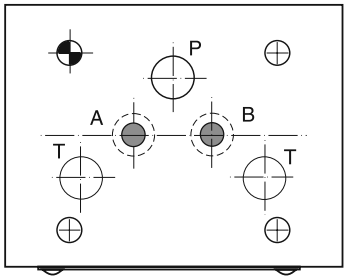

PP

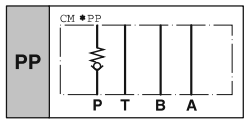

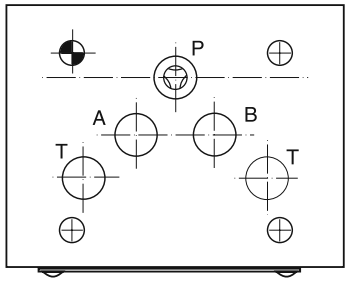

TT

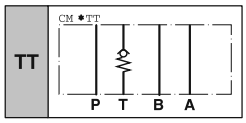

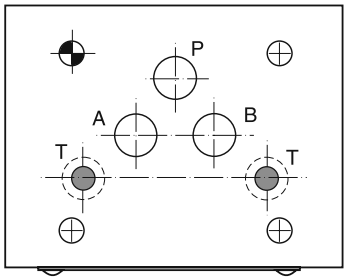

AAF

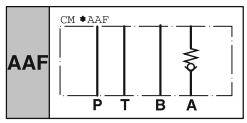

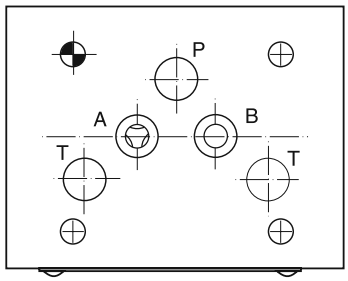

BBF

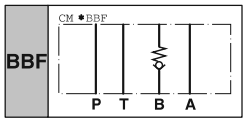

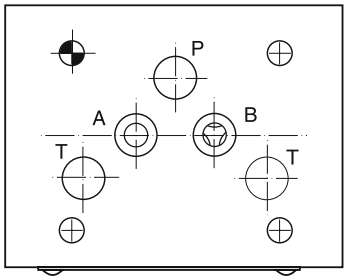

DDF

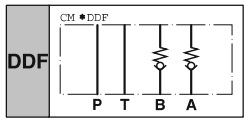

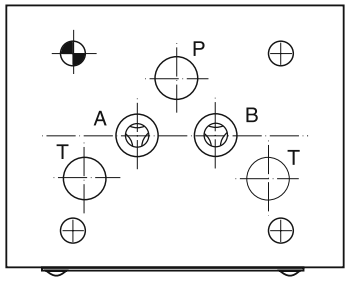

Direct operated check valves series ZRV have a cartridge type insert to provide zero leakage and high life time.

The check function can be located in the P- or in the T-port.

ZRV-P02

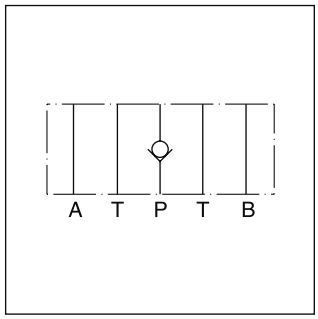

ZRV-P02

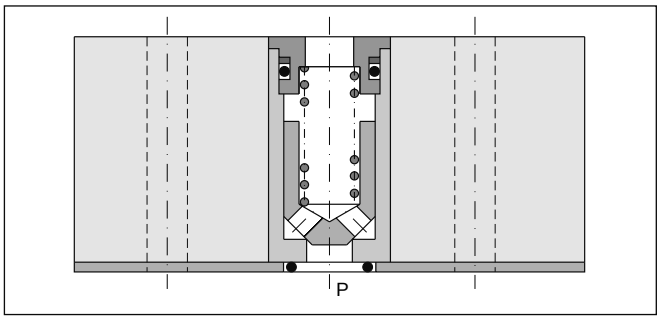

ZRV-P02

Features

- Leakage-free seat
- High life time
- Opening pressure 0.5 bar
- ZRV01 - NG06 (CETOP 03)
  ZRV02 - NG10 (CETOP 05)

Ordering code

ZRV – ☐ ☐

Check valve, direct operated | **Pressure control** | **Nominal size**

Code	Pressure control
P	Blocked in P
T	Blocked in T

Code	Nominal size
01	NG06
02	NG10

Ordering code details see end of chapter.

Technical data

General			
Size		**NG06**	**NG10**
Mounting interface		DIN 24340 A6 ISO 4401 NFPA D03	DIN 24340 A10 ISO 4401 NFPA D05
		CETOP RP 121	
Mounting position		unrestricted	
Ambient temperature	[°C]	-20...+60	
$MTTF_D$ value	[years]	150	
Weight	[kg]	0.7	2.0
Hydraulic			
Max. operating pressure	[bar]	350	315
Nominal flow	[l/min]	40	100
Opening pressure	[bar]	0.5	0.5
Fluid		Hydraulic oil according to DIN 51524	
Fluid temperature	[°C]	-20...+70 (NBR: -25...+70)	
Viscosity permitted	[cSt] / [mm^2/s]	20 ... 400	
Viscosity recommended	[cSt] / [mm^2/s]	30 ... 80	
Filtration		ISO 4406 (1999); 18/16/13	

ZRV UK.INDD CM 30.03.15

p/Q performance curves

ZRV*01

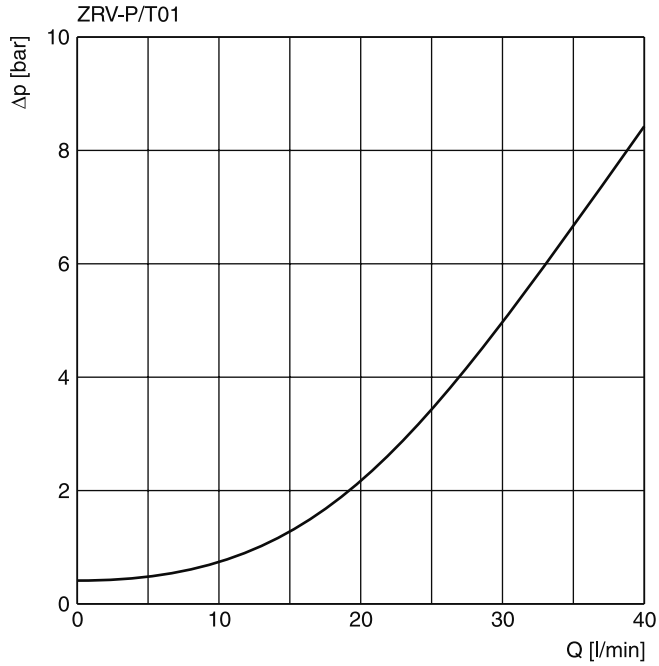

ZRV*02

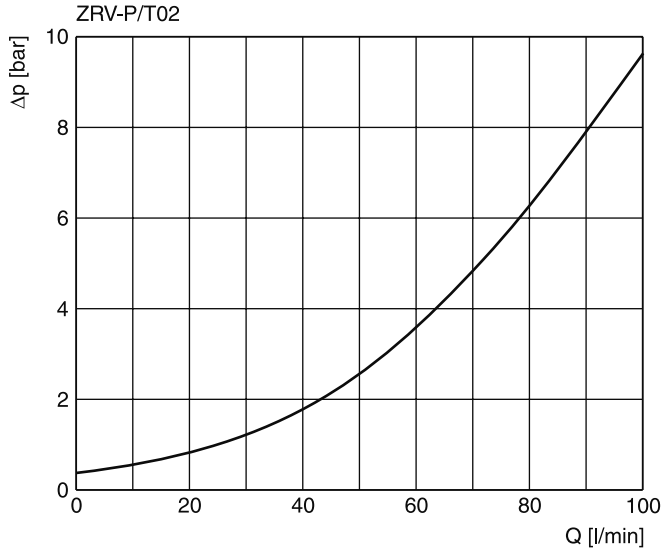

All characteristic curves measured with HLP46 at 50 °C.

ZRV01

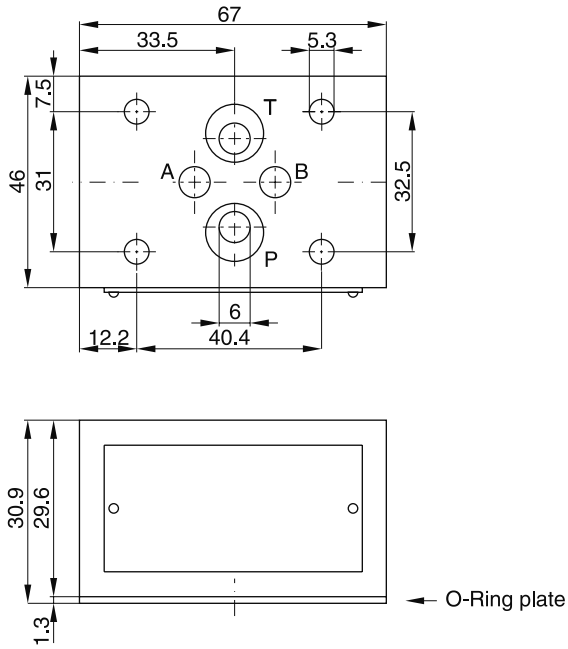

Seal kit	
Seal	**Order code**
NBR	SK-CM2-10
FPM	SK-CM2-V-10

ZRV02

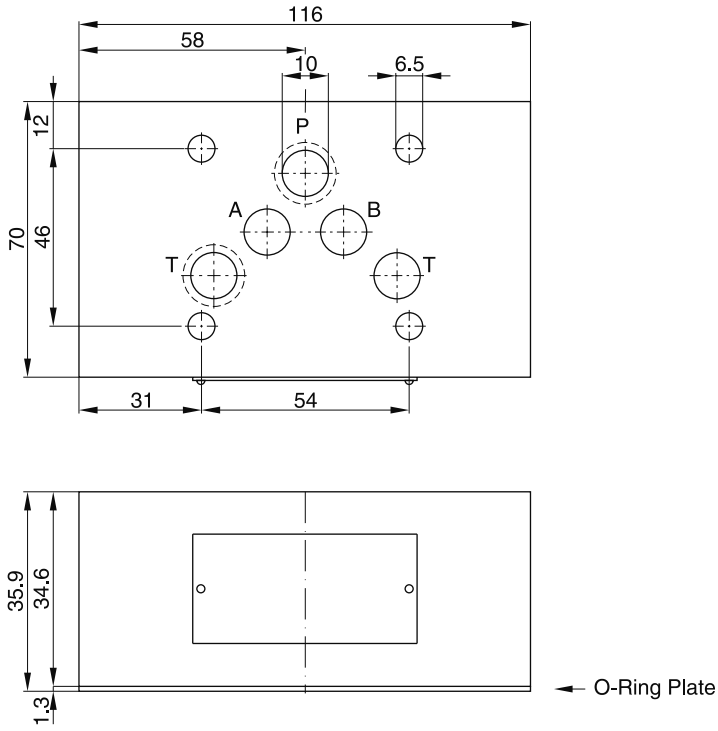

Seal kit	
Seal	**Order code**
NBR	SK-CM3-10
FPM	SK-CM3-V-50

ZRV01

blocked in P

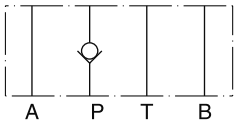

Series
ZRV-P01

Order No.
098-90025-0

blocked in T

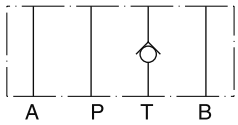

Series
ZRV-T01

Order No.
098-90026-0

ZRV02

blocked in P

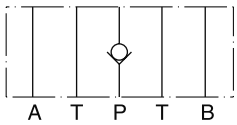

Series
ZRV-P02

Order No.
098-90043-0

blocked in T

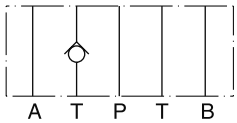

Series
ZRV-T02

Order No.
098-90044-0

Pilot operated check valves from the Parker Manapak series CPOM are in sandwich design for easy configuration of stack systems. Depending on the function required, one or two pilot operated check valves are arranged in the ports A and/or B. The free flow direction is always from the valve side to the manifold side.

Function

The check valves open when flowing to the consumer side, where the opposing check valve is hydraulically-mechanically pilot operated simultaneously by a control spool, and thus the return flow is enabled from other consumer sides.

Features

- The valve bodies of the Parker Manapak valve series CPOM are made of steel.
- The valve poppet is precisely guided into the steel sleeve and ensures a good seal on the seat.
- When the valve poppet is open, the large cross-section allows high flow rates at low differential pressure.
- Different control ratios can be chosen with the NG06 and NG10 valves.
- Pre-opening for CPOM*HT to achieve smooth opening.

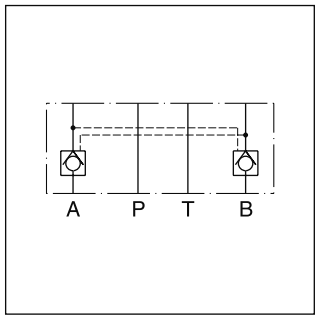

CPOM3

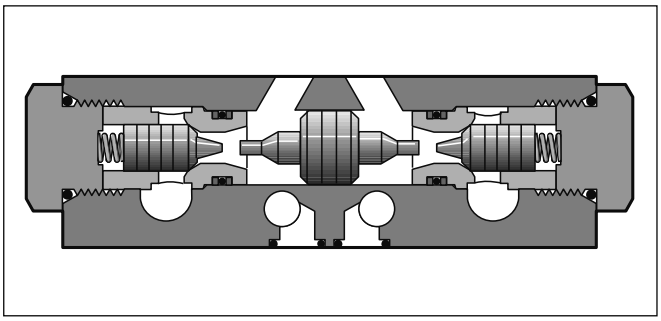

Ordering code

Without pre-opening

CPOM				V	
Hydraulically operated check valve pilot ratio 3 : 1	**Size**	**Poppet style**	**Opening pressure**	**Seal FPM**	**Design series** (not required for ordering)

Code	Size
2	**NG06**
3	**NG10**
6	NG25

Code	Pressure	Size
omit	**1.0 bar**	**NG06/10/25**
25	2.5 bar	NG06
50	5.0 bar	NG06
70	7.0 bar	NG06

Code	Connection
AA	**only A**
BB	**only B**
DD	**A and B**

With pre-opening

CPOM	4		HT	V	
Hydraulically operated check valve	**Size NG16**	**Poppet style**	**Pilot ratio 13:1**	**Seal FPM**	**Design series** (not required for ordering)

Code	Connection
AA	**only A**
BB	**only B**
DD	**A and B**

Bold letters =
Short-term availability

CPOM UK.INDD CM 30.03.15

Technical data

General					
Series		**CPOM2**	**CPOM3**	**CPOM4**	**CPOM6**
Nominal size		**NG06**	**NG10**	**NG16**	**NG25**
Mounting interface		ISO 4401			
Ambient temperature	[°C]	-20...+60			
$MTTF_D$ value	[years]	150			
Weight	[kg]	1.8	4.0	7.65	9.5
Hydraulic					
Max. operating pressure	[bar]	350	350	350	210
Opening pressure	[bar]	1.0	0.8	2.0	0.4
Opening ratio		1 : 3	1 : 3	1 : 13	1 : 3
Fluid		Hydraulic oil according to DIN 51524			
Fluid temperature	[°C]	-20...+70			
Viscosity, permitted	[cSt] / [mm²/s]	20...400			
recommended	[cSt] / [mm²/s]	30...80			
Filtration		ISO 4406 (1999); 18/16/13			

Schematics

CPOM2 / CPOM3

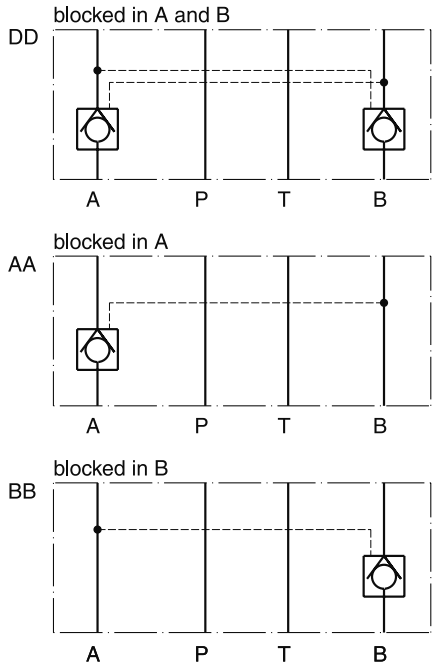

CPOM4 / CPOM6

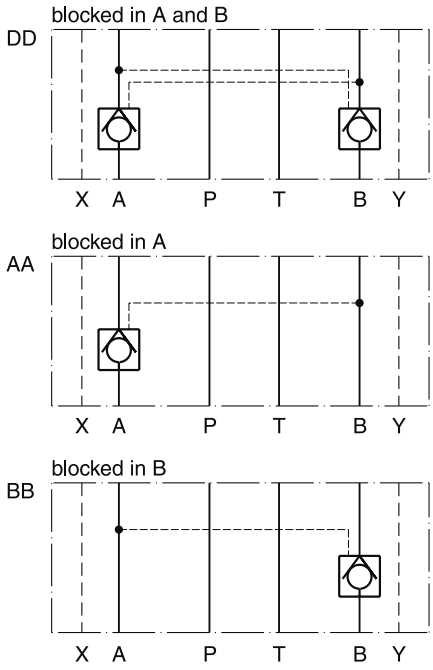

Δp/Q performance curves

CPOM2

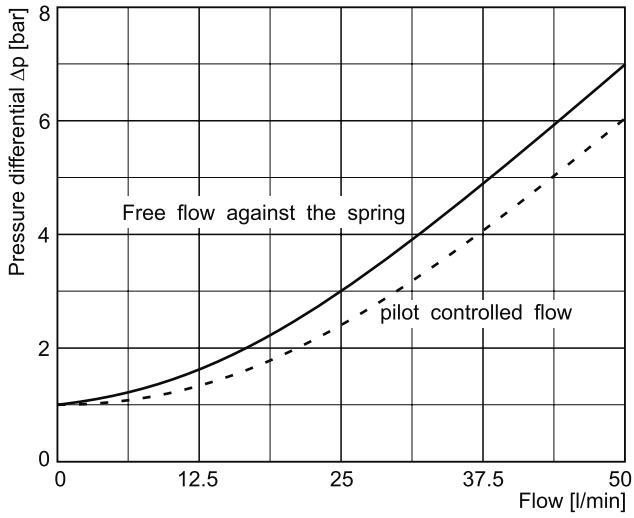

CPOM3

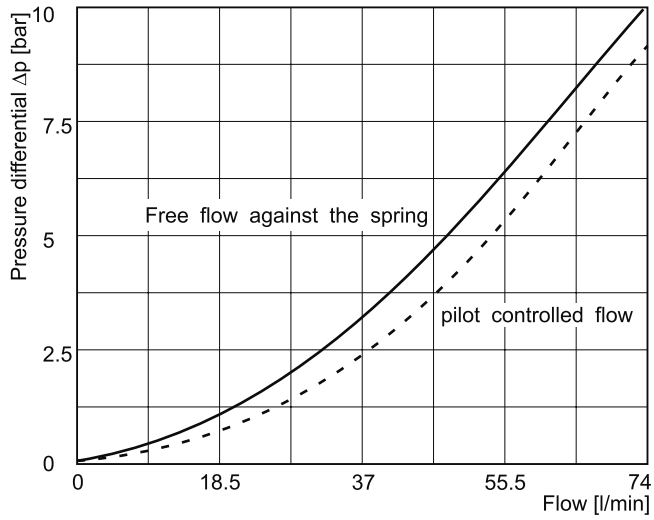

CPOM4 (type HT)

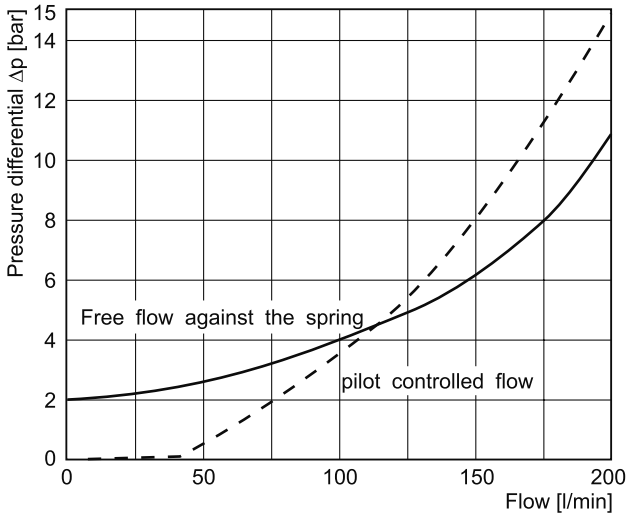

CPOM6

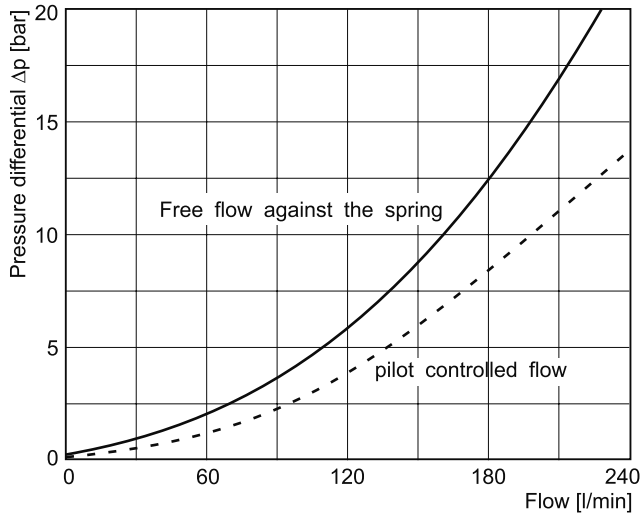

All characteristic curves measured with HLP46 at 50 °C.

CPOM2

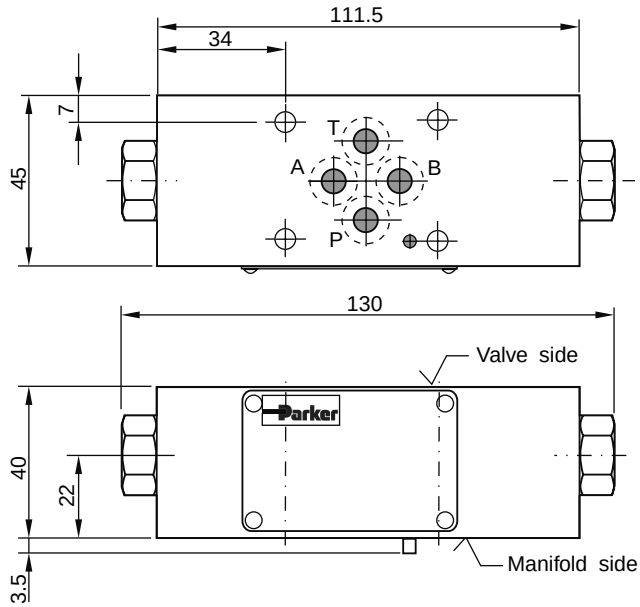

Seal kit CPOM2	
Seal	**Order code**
V	SK-CPOM2-V-11

CPOM3

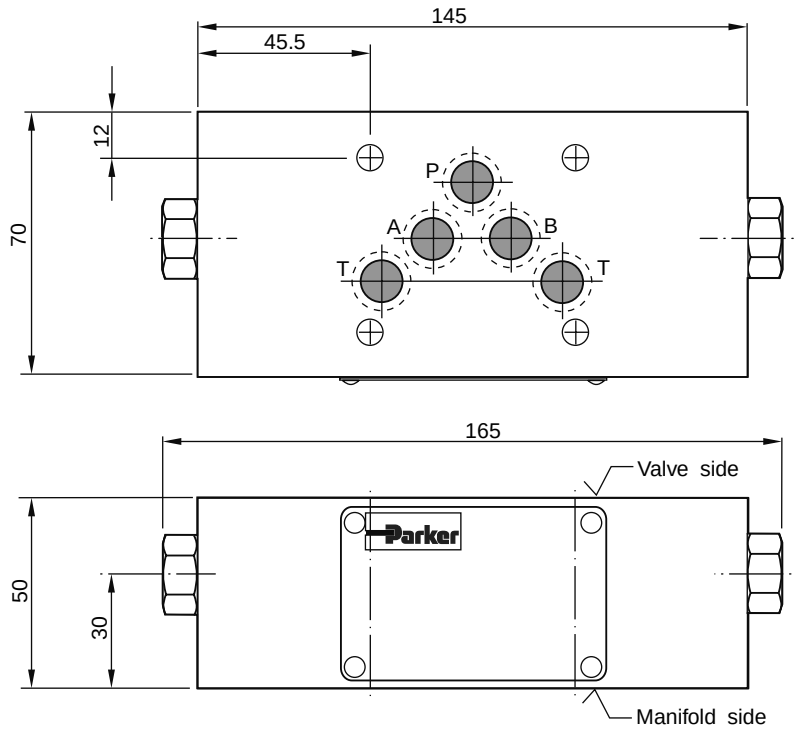

Seal kit CPOM3	
Seal	**Order code**
V	SK-CPOM3-V-11

Note:

The O-ring plate for sealing the connecting surface of the manifold side is included. The O-ring plate and the positioning pin are always mounted on the manifold side.

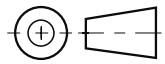

CPOM4

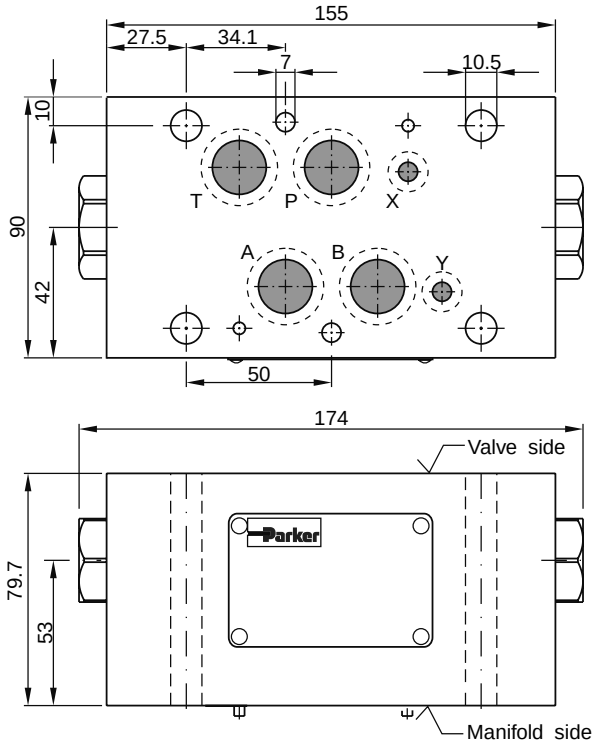

Seal kit CPOM4	
Seal	**Order code**
V	SK-CPOM4HTV

CPOM6

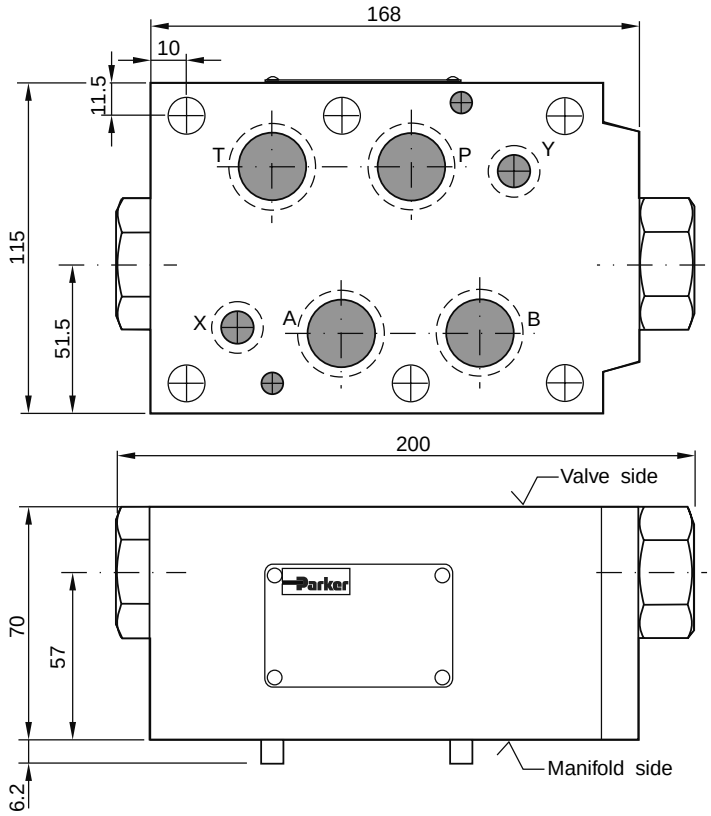

Seal kit CPOM6	
Seal	**Order code**
V	SK-CPOM6-V-20

Note:

The O-ring plate for sealing the connecting surface of the manifold side is included. The O-ring plate and the positioning pin are always mounted on the manifold side.

Pilot operated check valves series ZRE are designed for maximum flow rates and long life time.

The valves are typically used in combination with spool type directional control valves to ensure nearly leak free positioning of the actuator.

The inlet flow is free while the outlet flow is blocked. Pressure in the inlet line opens the check valve and allows free outlet flow.

ZRE-B01

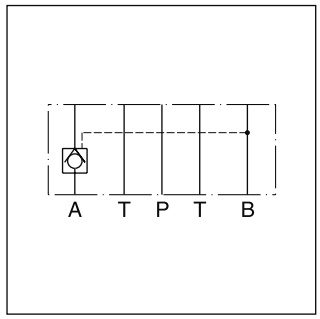

ZRE-A02

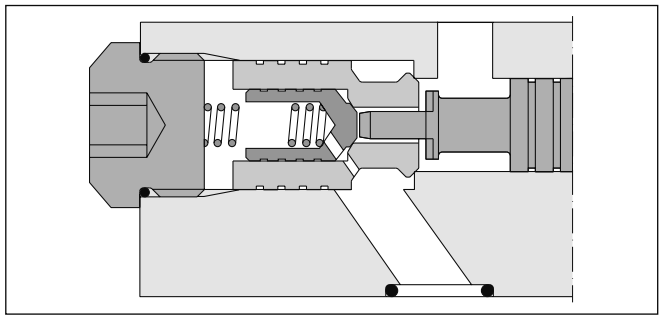

ZRE-A02

Features

- High flow capacity
- High life time
- Check function in A, B or A + B
- ZRE01 - NG06 (CETOP 03)
  ZRE02 - NG10 (CETOP 05)

Ordering code

ZRE – [ ] [ ] – [ ] [ ]

Check valve pilot operated | **Pressure control** | **Nominal size** | **Design series** | **Seal**

Code	Pressure control
A	Blocked in A
B	Blocked in B
AB	Blocked in A and B

Code	Nominal size
01	NG06
02	NG10

Code	Seal
1	NBR
5	FPM

Code	Design series
D	NG06
E	NG10

Ordering code details see end of chapter.

Technical data

General			
Size		**NG06**	**NG10**
Mounting interface		DIN 24340 A6 ISO 4401 NFPA D03	DIN 24340 A10 ISO 4401 NFPA D05
		CETOP RP 121	
Mounting position		unrestricted	
Ambient temperature	[°C]	-20...+60	
$MTTF_D$ value	[years]	150	
Weight	[kg]	1.2	3.1
Hydraulic			
Max. operating pressure	[bar]	up to 350	315
Nominal flow	[l/min]	60	120
Opening ratio (pilot cone / main cone)		1:6	1:6
Opening pressure	[bar]	1.2	2.0
Leakage		on request	
Fluid		Hydraulic oil according to DIN 51524	
Fluid temperature	[°C]	-20...+70 (NBR: -25...+70)	
Viscosity permitted	[cSt] / [mm^2/s]	20 ... 400	
Viscosity recommended	[cSt] / [mm^2/s]	30 ... 80	
Filtration		ISO 4406 (1999); 18/16/13	

ZRE UK.INDD CM 30.03.15

p/Q performance curves

ZRE*01

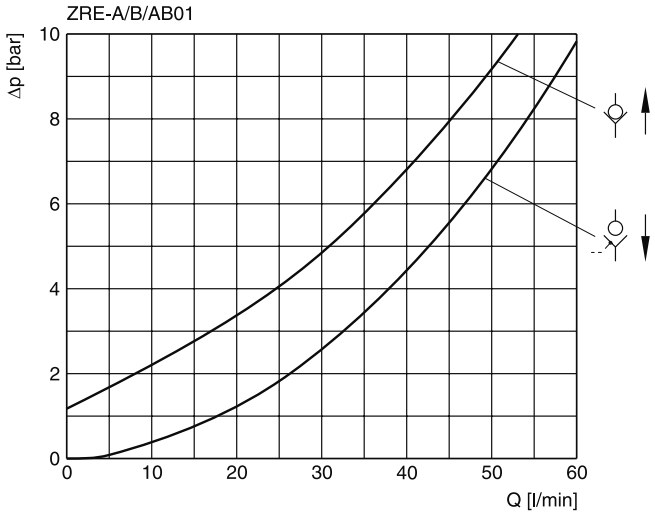

ZRE*02

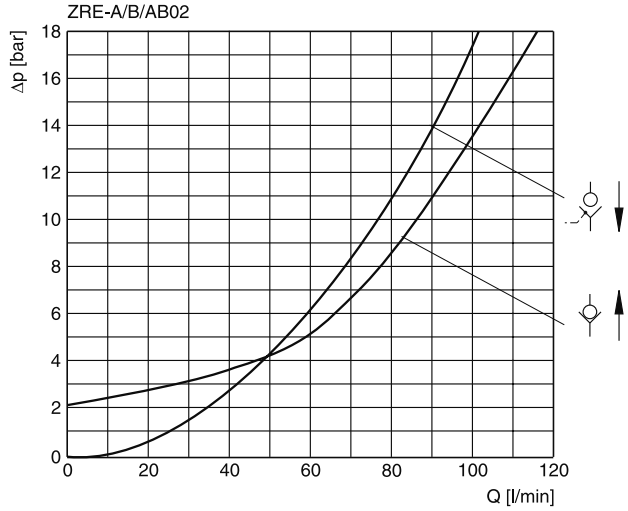

All characteristic curves measured with HLP46 at 50 °C.

Dimensions

ZRE*01

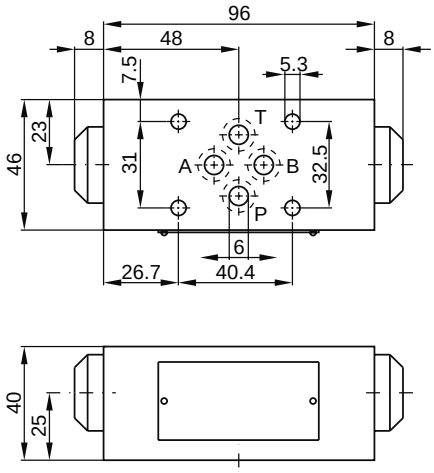

Seal kit	
Seal	**Order code**
1	098-91088-0
5	098-91089-0

ZRE*02

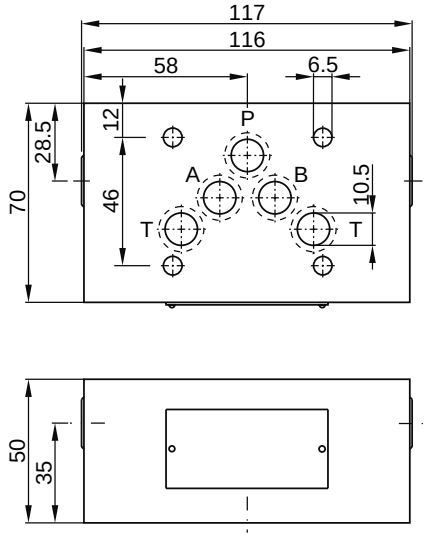

Seal kit	
Seal	**Order code**
1	098-91090-0
5	098-91091-0

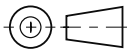

ZRE*01

blocked in A and B

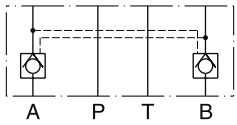

Series ZRE-AB01-D1 — Order No. 098-91020-0

blocked in A

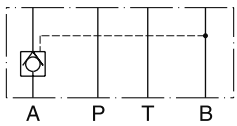

Series ZRE-A01-D1 — Order No. 098-91018-0

blocked in B

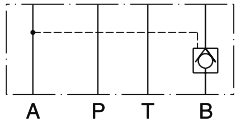

Series ZRE-B01-D1 — Order No. 098-91019-0

ZRE*02

blocked in A and B

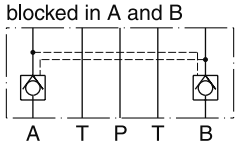

Series ZRE-AB02-E1 — Order No. 098-91300-0

blocked in A

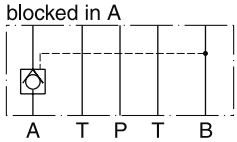

Series ZRE-A02-E1 — Order No. 098-91298-0

blocked in B

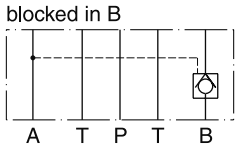

Series ZRE-B02-E1 — Order No. 098-91304-0

The counterbalance valve series ZNS controls the actuator movement at overrunning loads.

The return flow from the actuator is piloted and controlled by the inlet flow to the actuator, ensuring a cavitation-free lowering of the load.

The counter balance valve operates as a pressure relief valve. The setting pressure is lowered by the pressure in the inlet line. To ensure safe load holding the setting pressure should be approximately 30 % higher than the max. load pressure.

ZNS-AB01

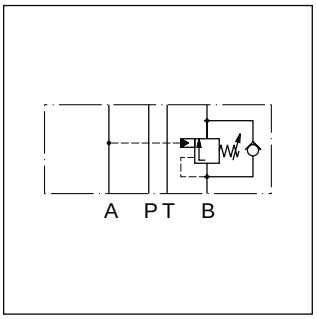

ZNS-B01

Features

- Controlled movement loads
- Load holding via leak-free poppet valve
- Secondary relief protection for the actuator
- ZNS*01 – NG06 (CETOP 03)
  ZNS*02 – NG10 (CETOP 05)

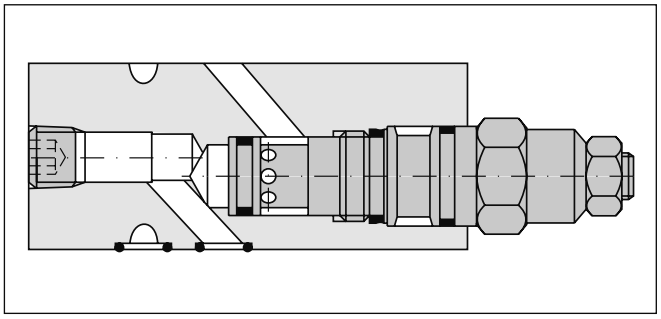

ZNS-B01

Ordering code

ZNS				S0	D	
Counterbalance valve	Pressure control	Nominal size	Pressure stages	Hexagon screw with lock nut	Design series	Seal

Code	Pressure control
A	in A
B	in B
AB	in A and B

Code	Nominal size
01	NG06
02	NG10

Code	Seal
1	NBR
5	FPM

Code	Pressure stages
2	70 - 175 bar
5 [1)]	140 - 350 bar

Ordering code details see end of chapter.

[1)] NG10 to 315 bar.

Technical data

General			
Size		**NG06**	**NG10**
Mounting interface		DIN 24340 A6 ISO 4401 NFPA D03	DIN 24340 A10 ISO 4401 NFPA D05
Mounting position		unrestricted	
Ambient temperature	[°C]	-20...+60	
Weight 1 cartridge	[kg]	1.3	1.6
Weight 2 cartridges	[kg]	3.0	3.9
Hydraulic			
Max. operating pressure	[bar]	350	315
Pressure stages	[bar]	175, 350	
Pilot ratio		4.5 : 1	
Leakage		on request	
Nominal flow	[l/min]	60	120
Opening pressure	[bar]	0.3	0.3
Fluid		Hydraulic oil according to DIN 51524	
Fluid temperature	[°C]	-20...+70 (NBR: -25...+70)	
Viscosity, permitted	[cSt] / [mm²/s]	20 ... 400	
Viscosity, recommended	[cSt] / [mm²/s]	30 ... 80	
Filtration		ISO 4406 (1999); 18/16/13	

ZNS UK.INDD CM 30.03.15

p/Q performance curves

ZNS*01

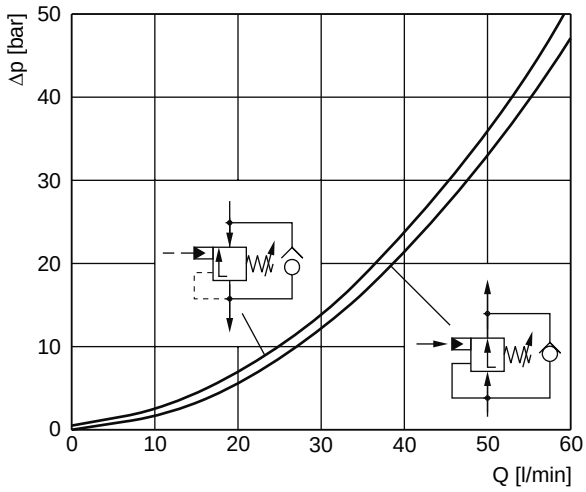

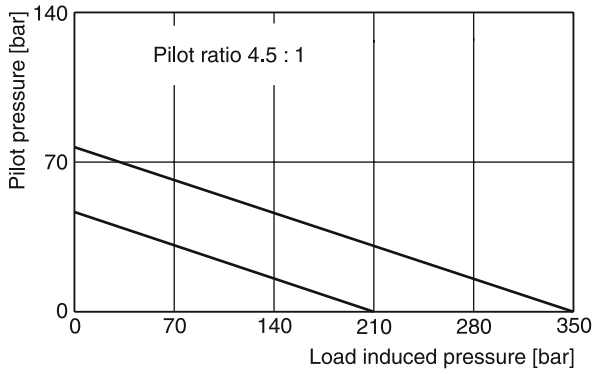

ZNS*02

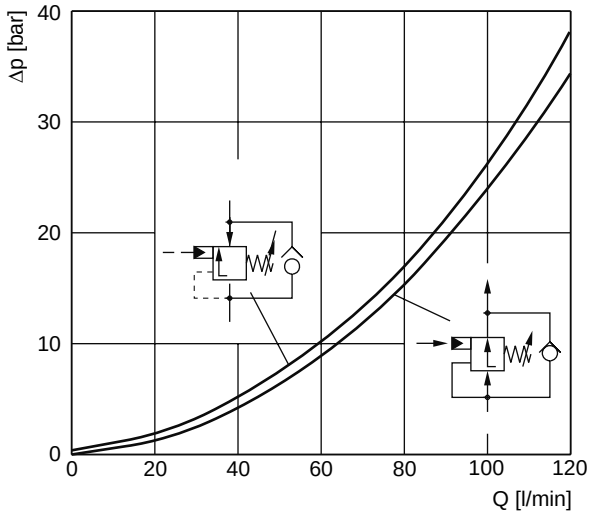

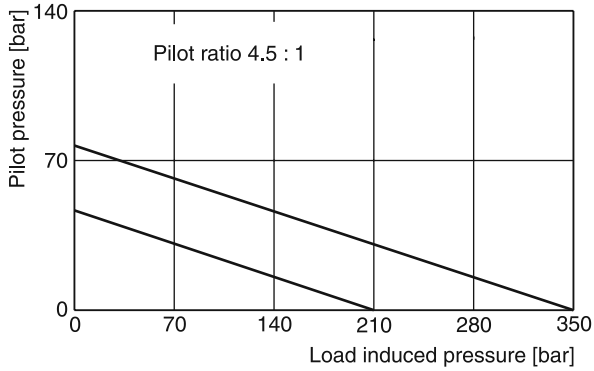

All characteristic curves measured with HLP46 at 50 °C.

ZNS*01

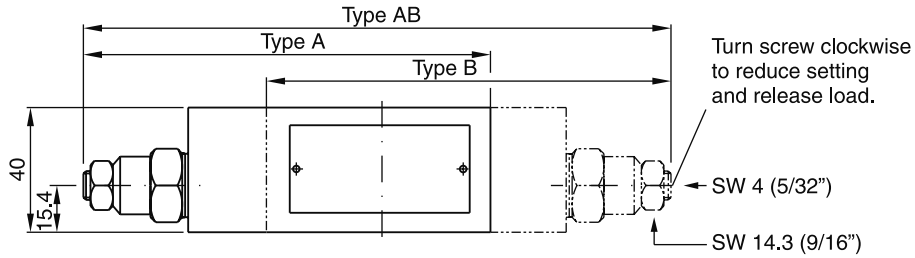

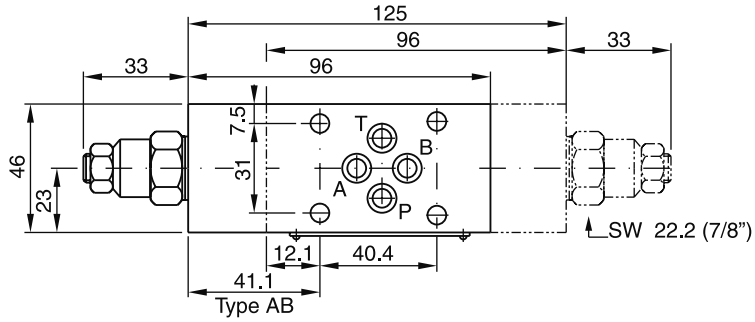

Seal kit ZNS*01	
Seal	**Order code**
NBR	098-91153-0
FPM	098-91154-0
Complete cartridge ZNS*01	
Pressure stage	**Order code**
2	517-01017-2
5	517-00448-8

ZNS*02

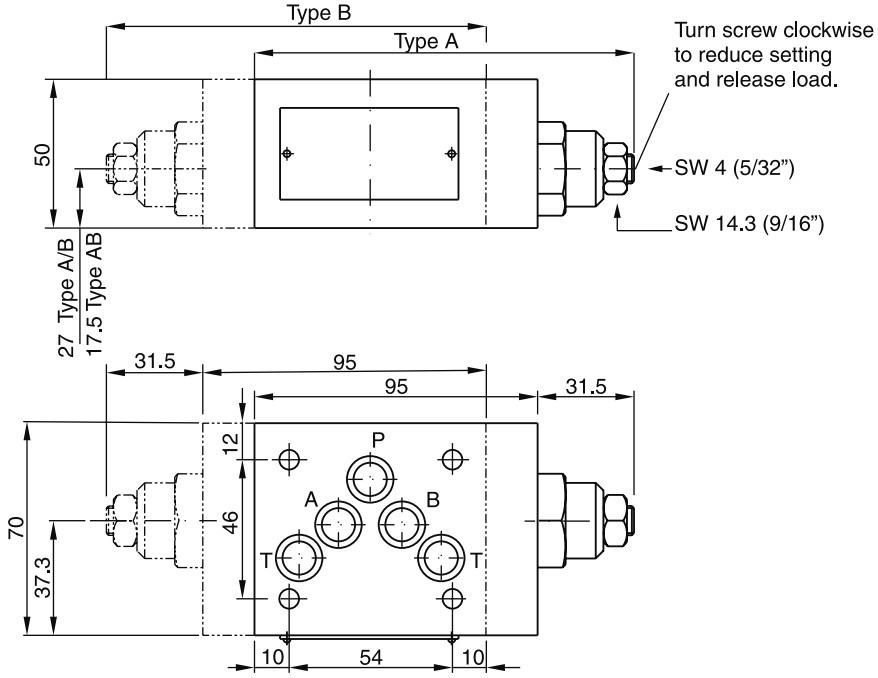

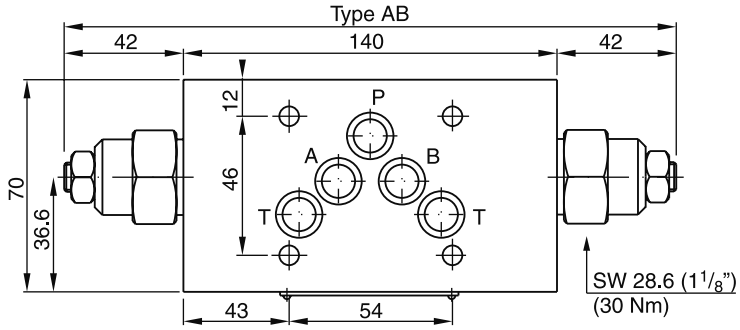

Seal kit ZNS*02	
Seal	**Order code**
NBR	098-91155-0
FPM	098-91156-0
Complete cartridge ZNS*02	
Pressure stage	**Order code**
2	517-00449-8
5	517-00450-8

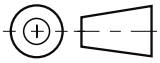

7

ZNS UK.INDD CM 30.03.15

	ZNS*01		ZNS*02	
Counterbalance in A				
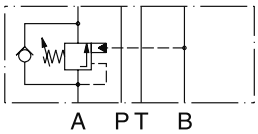	Series	Order no.	Series	Order no.
	ZNS-A01-2-S0-D1	098-91126-0	ZNS-A02-2-S0-D1	098-91132-0
	ZNS-A01-5-S0-D1	098-91127-0	ZNS-A02-5-S0-D1	098-91133-0
Counterbalance in B				
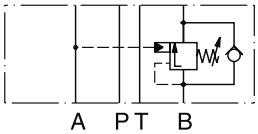	Series	Order no.	Series	Order no.
	ZNS-B01-1-S0-D1	098-91128-0	ZNS-B02-1-S0-D1	098-91134-0
	ZNS-B01-5-S0-D1	098-91129-0	ZNS-B02-5-S0-D1	098-91135-0
Counterbalance in A and B				
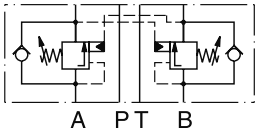	Series	Order no.	Series	Order no.
	ZNS-AB01-1-S0-D1	098-91130-0	ZNS-AB02-1-S0-D1	098-91136-0
	ZNS-AB01-5-S0-D1	098-91131-0	ZNS-AB02-5-S0-D1	098-91137-0
	2 = 70 ... 175 bar 5 = 140… 350 bar		2 = 70 ... 175 bar 5 = 140 …315 bar	

7

NG06

Code: ISO 4401-03-02-0-94

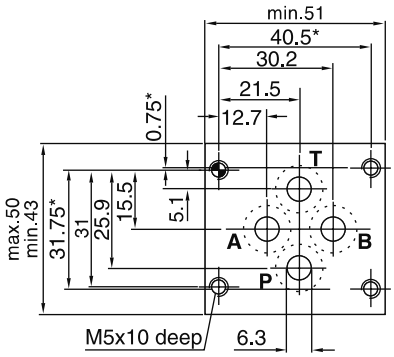

NG16

Code: ISO 4401-07-06-0-94

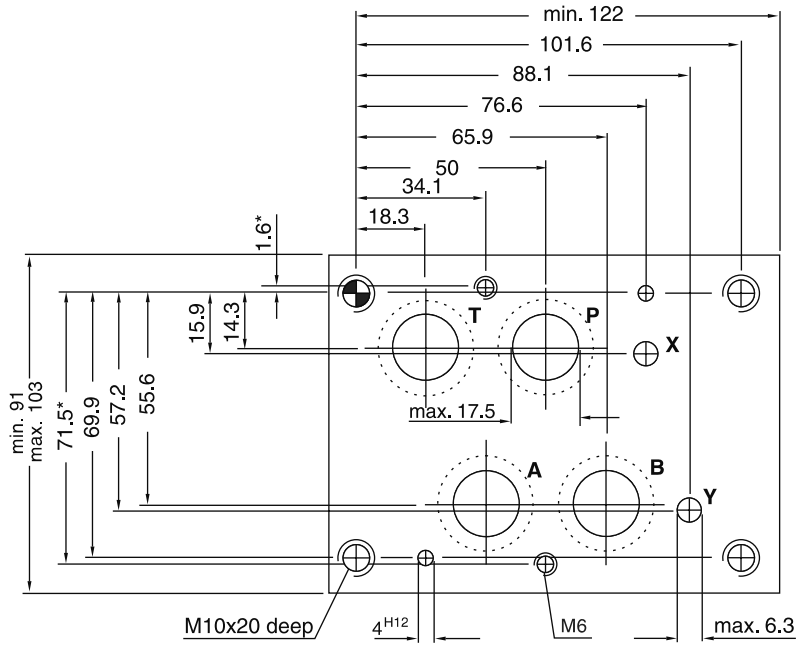

NG10

Code: ISO 4401-05-05-0-94

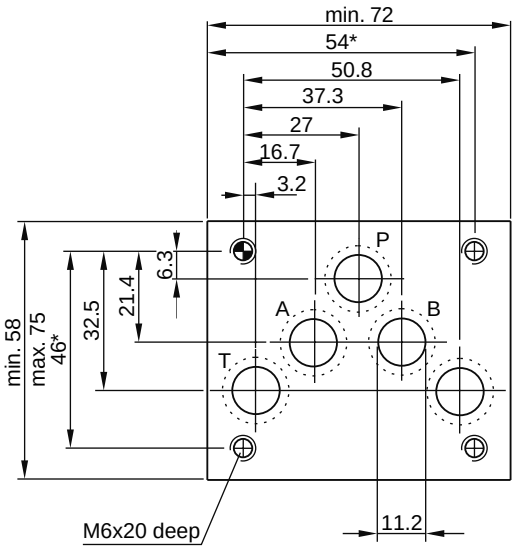

NG25

Code: ISO 4401-08-07-0-94 (Port diameter acc. to NFPA)

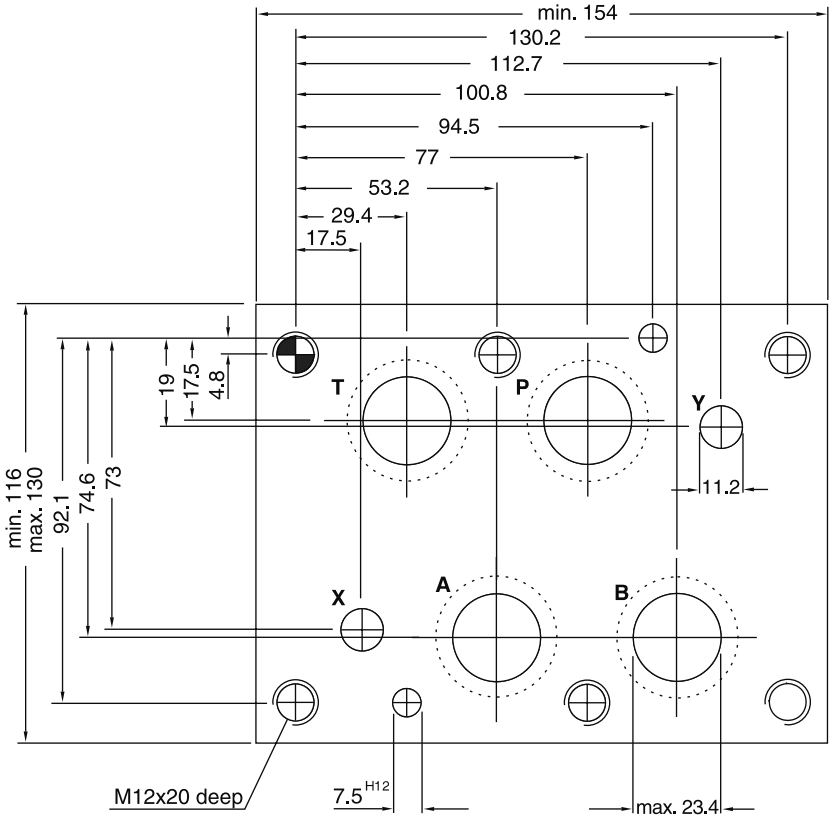

Dimensions marked with*: ± 0.1 mm.
All other dimensions: ± 0.2 mm.

Information07.INDD CM 30.03.15

Mounting

Parker sandwich valves can be installed as desired. Each has a mounting pattern, whose dimensions correspond to the following standards.

ISO 4401
DIN 24430
CETOP RP121
NFPA

Mounting screws

Cylinder head bolts as per ISO 4762-12.9, or studs as per DIN 835 10.9 with cylindrical nuts are used to mount the height stacking Manapak sandwich valves.

Bolt kits and tie rods see chapter 12, "Accessories".

Length of the mounting screws

The screw length is the sum of the engagement depth plus the stacking length. The stud length is the sum of the stacking length plus the thread depth of the nut.

Torques

The mounting screws or studs must be tightened with the prescribed tightening torque so that safety and proper seal are ensured.

See chapter 12 “Accessories“ for BK bolt kits and TK tie rod kits.

Threads length

Threads	M5	M6	M10	M12
thread length	1.5 x Ø thread			

Series	Description	Size									Page
	DIN / ISO	16	25	32	40	50	63	80	100	125	
	2-way slip-in cartridge valves										
	Introduction, hydraulic symbols, installation dimensions										8-2
CE / CP	2-way cartridge	•	•	•	•	•	•	•	•		8-4
C*A	Cover without auxilary function	•	•	•	•	•	•	•	•		8-8
C*B	Cover with stroke limiter	•	•	•	•	•	•	•	•		8-9
C*C	Cover for pilot system mounting	•	•	•	•	•	•	•	•		8-11
C*F	Cover for pressure relief function	•	•	•							8-14
C*G	Cover for pressure relief function plus pilot system mounting	•	•	•							8-15
C*H	Cover with stroke limiter and DC valve mounting	•	•	•	•	•	•	•	•		8-16
C*V	Cover with shuttle valve	•	•	•	•	•	•				8-19
C*W	Cover with shuttle valve plus pilot system mounting	•	•	•	•	•	•				8-20
	Accessories										
	Pilot valves										8-21
	Cover-, sandwich, adaptor plates										8-29
	Spare parts, seal kits										8-31
	Orifice diagram, orifice kits										8-32
	Extracting tools										8-33
	Complete valves and combination examples, pressure function										
R / RS*E	Pressure relief valves, manual adjustment	•	•	•	•	•	•				8-34
DSDU	Pilot operated pressure relief valve	•	•	•							8-40
RE*E*W	Pressure relief valves, proportional adjustment	•	•	•	•	•	•				8-43
RE*E*T	Pressure relief valves, proportional adjustment, OBE	•	•	•	•	•	•				8-47
UR*E/US*E	Pressure unloading valves	•	•	•	•	•	•				8-53
	Combination examples, pressure function	•	•	•	•	•	•				8-59
	Complete valves and combination examples, 2-way and check function										
C1DB	Direct operated check valve	•	•	•	•	•	•	•	•		8-77
SVLB	Pilot operated check valve	•	•	•	•	•					8-79
	Combination examples 2-way and check functions	•	•	•	•	•	•	•	•		8-82
	Complete valves, directional function with position control										
C10D*C		•	•	•	•	•	•	•	•		8-87
	Complete valves, active cartridges										
TDW			•	•	•	•	•	•	•	•	8-94
	Complete valves, flow function										
TDA	2-way proportional throttle valve	•	•	•	•	•	•	•	•		8-106
TEA	2-way proportional throttle valve with shut-off valve			•	•	•	•	•	•		8-110
TDP	2-way high-response valve		•	•	•	•	•	•	•	•	8-113
TEP	2-way high-response valve with shut-off valve		•	•	•	•	•	•	•	•	8-124
TPQ	3-way high-response valve		•	•	•	•	•	•			8-136

8

content08.INDD CM 16.04.15

Port identifications - graphics

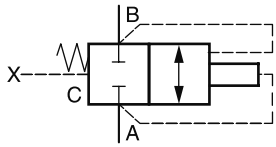

Description

Depending on valve function and design, power ports A and B can be used for inlet or outlet.

The control port C is the connection between cover and cartridge unit.

Control ports

X control oil connection, inlet

Y control oil connection, outlet

Further control ports

Z_1 control oil connection, preferred inlet

Z_2 control oil connection, preferred outlet

Control surfaces - graphics

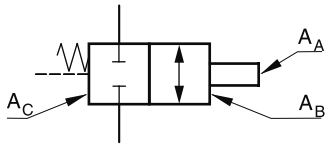

Description

A_A Area, which is subjected to the pressure at port A

A_B Area, which is subjected to the pressure at port B

A_C Area, which is subjected to the pressure at port C

Port identifications - schematics

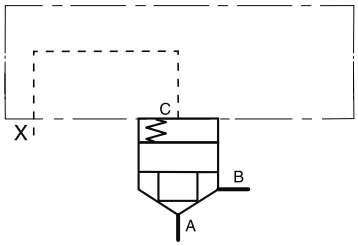

Control surfaces - schematics

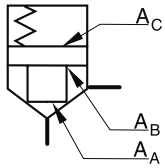

Area representation

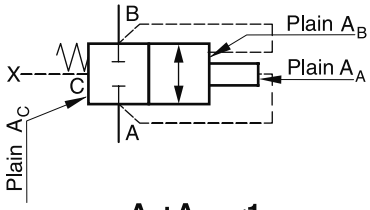

$A_A : A_C = <1$

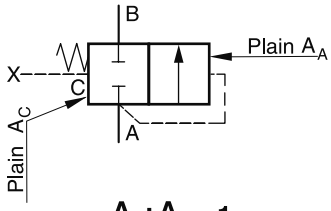

$A_A : A_C = 1$

Design representation

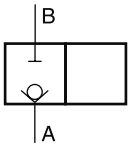

Seat design

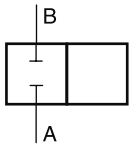

Spool design

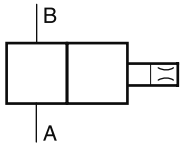

Dampening poppet

Code: ISO 7368-B*-*-2-A/B
NG16 to NG63

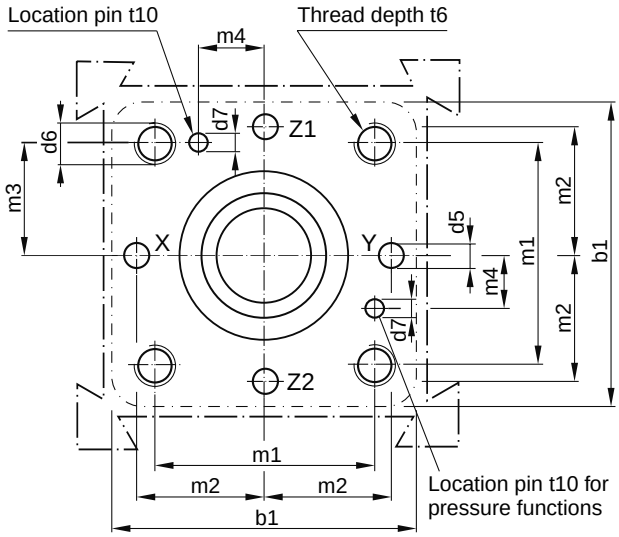

Code: ISO 7368-B*-*-2-A
NG80 to NG100

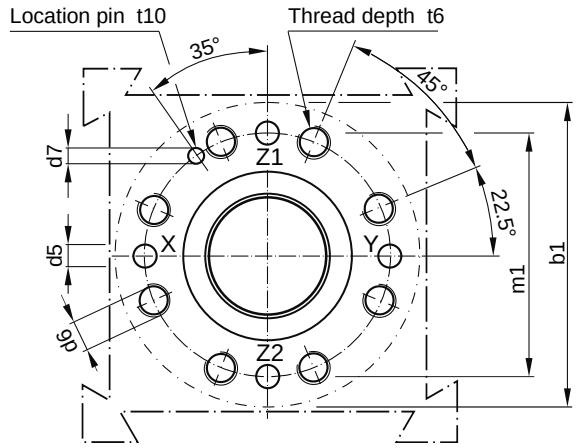

Hole and mounting pattern acording ISO 7368

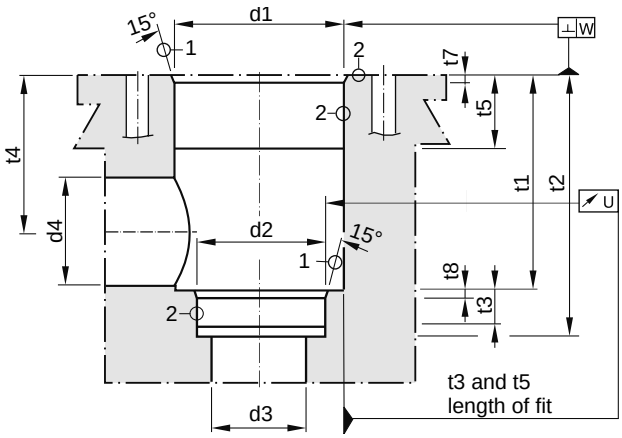

Required surface finish:

(1) = $\sqrt{R_{max}16}$, (2) = $\sqrt{R_{max}8}$

Cartridge manifold block series CB see chapter 12.

Nom. size	b1	d1 H7	d2 H7	d3	d3 max	d4	d4 max[1)]	d5 max	d6	d7 H13	m1±0.2	m2±0.2	m3±0.2
16	65	32	25	16	18	16	25	4	M 8	4	46	25	23
25	85	45	34	25	25.5	25	32	6	M 12	6	58	33	29
32	102	60	45	32	36	32	40	8	M 16	6	70	41	35
40	125	75	55	40	43	40	50	10	M 20	6	85	50	42.5
50	140	90	68	50	56	50	63	10	M 20	8	100	58	50
63	180	120	90	63	74	63	80	12	M 30	8	125	75	62.5
80	250	145	110	80	93	80	100	16	M 24	10	200	–	–
100	300	180	135	100	115	100	125	20	M 30	10	245	–	–

Nom. size	m4±0.2	t1+0.1	t2+0.1	t3	t4	t4 max[1)]	t5	t6	t7	t8	t10	U	W
16	10.5	43	56	11	34	29.5	20	20	2	2	10	0.03	0.05
25	16	58	72	12	44	40.5	30	25	2.5	2.5	10	0.03	0.05
32	17	70	85	13	52	48.0	30	35	2.5	2.5	10	0.03	0.1
40	23	87	105	15	64	59.0	30	45	3	3	10	0.05	0.1
50	30	100	122	17	72	65.5	35	45	4	3	10	0.05	0.1
63	38	130	155	20	95	86.5	40	65	4	4	10	0.05	0.2
80	–	175	205	25	130	120	40	50	5	5	10	0.05	0.2
100	–	210	245	29	155	142	50	53	5	5	10	0.05	0.2

[1)] Only together with $d4_{max}$ and $t4_{max}$

intro08.INDD CM 16.04.15

2-way slip-in cartridge valves are hydraulically controlled seat valves that are designed for compact block installation. Slip-in cartridge, cover, and pilot system are valve elements that permit single and combined functions.

Series CE offers poppet and sleeve combinations for directional functions. Series CP offers a cartridge for pressure functions and has to be combined with corresponding covers.

Features

- Installation cavity and mounting pattern according to ISO 7368
- 5 poppet shapes
- 5 poppet springs
- Optional seal between ports B and C
- Cover with adjustable stroke limitation
- Cover with mounting pattern for pilot valve assembly
- Combinations for complex functions
- Normally open cartridge (CE*F*)

CE

C*B

C*A

C*C

Pilot control for directional functions

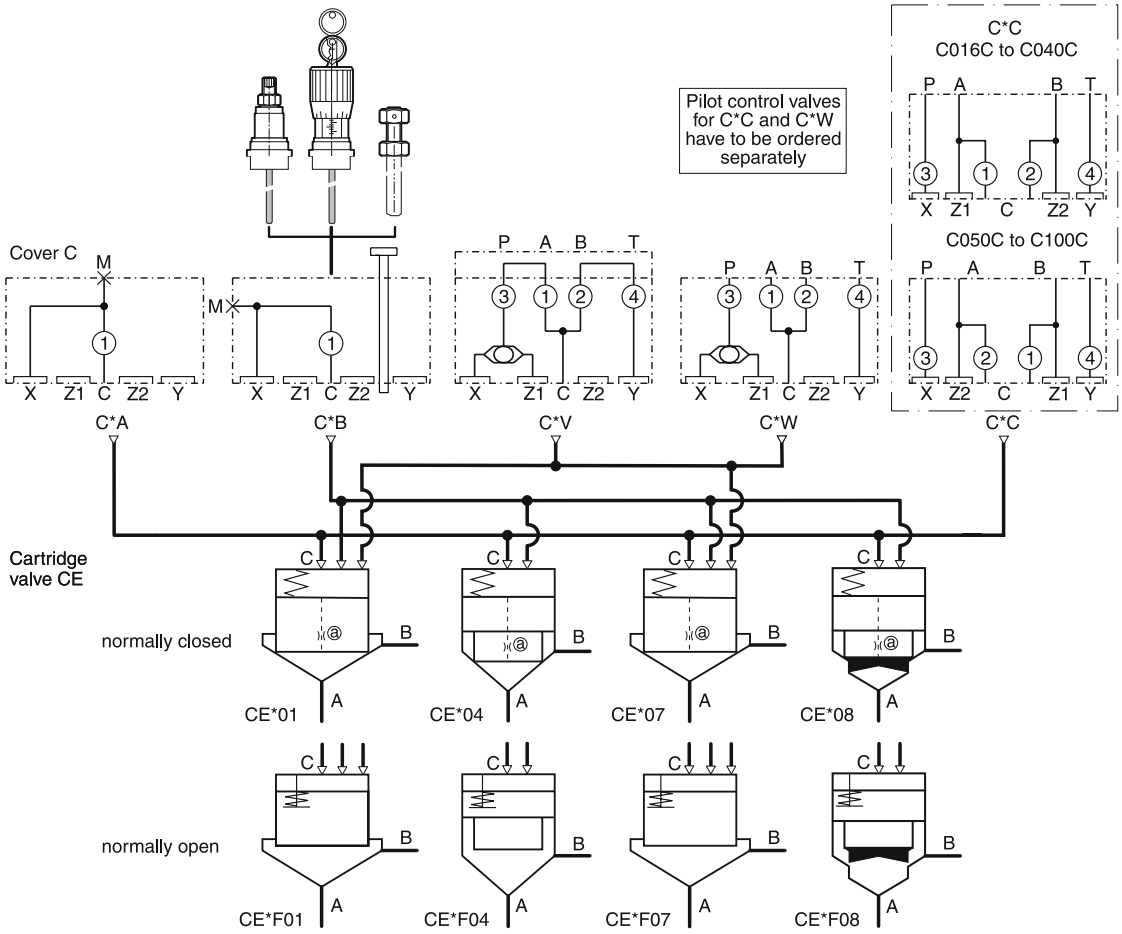

Cartridge valve for directional function normally closed

CE*_01	CE*_04	CE*_07	CE*_08
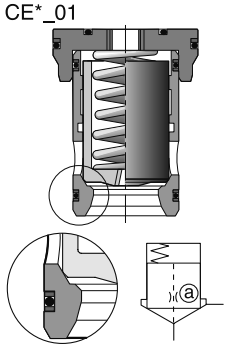	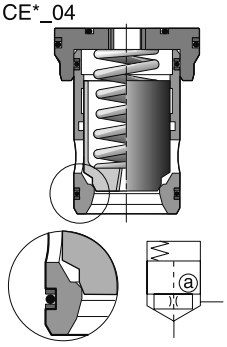	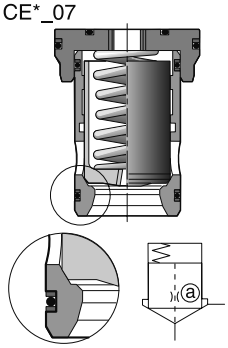	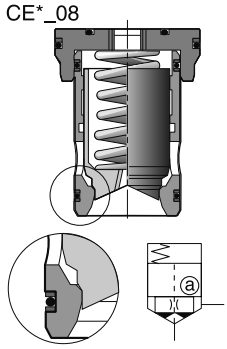
1 : 1 $A_A = A_C$	1 : 1.67 $A_A = 0.6\ A_C$ $A_B = 0.4\ A_C$	1 : 1.04 $A_A = 0.96\ A_C$	1 : 1.67 $A_A = 0.6\ A_C$ $A_B = 0.4\ A_C$ dampening poppet

normally open

CE*F01	CE*F04	CE*F07	CE*F08
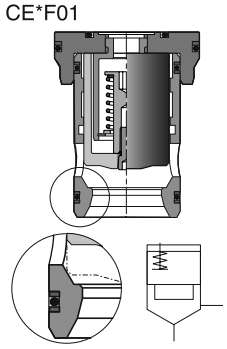	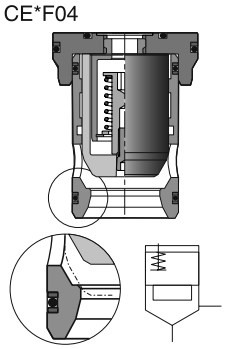	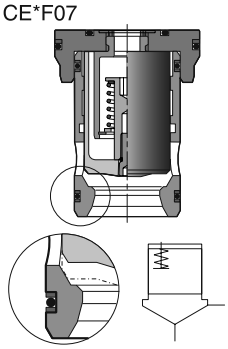	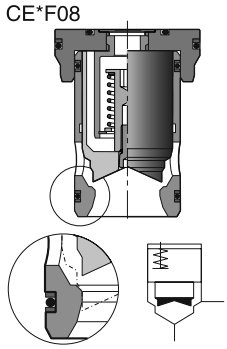
1 : 1 $A_A = A_C$	1 : 1.67 $A_A = 0.6\ A_C$ $A_B = 0.4\ A_C$	1 : 1.04 $A_A = 0.96\ A_C$	1 : 1.67 $A_A = 0.6\ A_C$ $A_B = 0.4\ A_C$ dampening poppet

8

Cartridge valve for pressure function

CP*_07
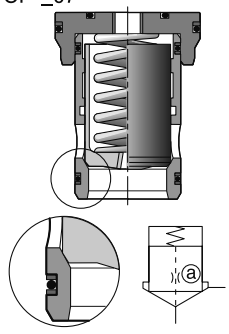
1 : 1.04 $A_A = 0.96\ A_C$ normally closed

Pilot control for pressure function

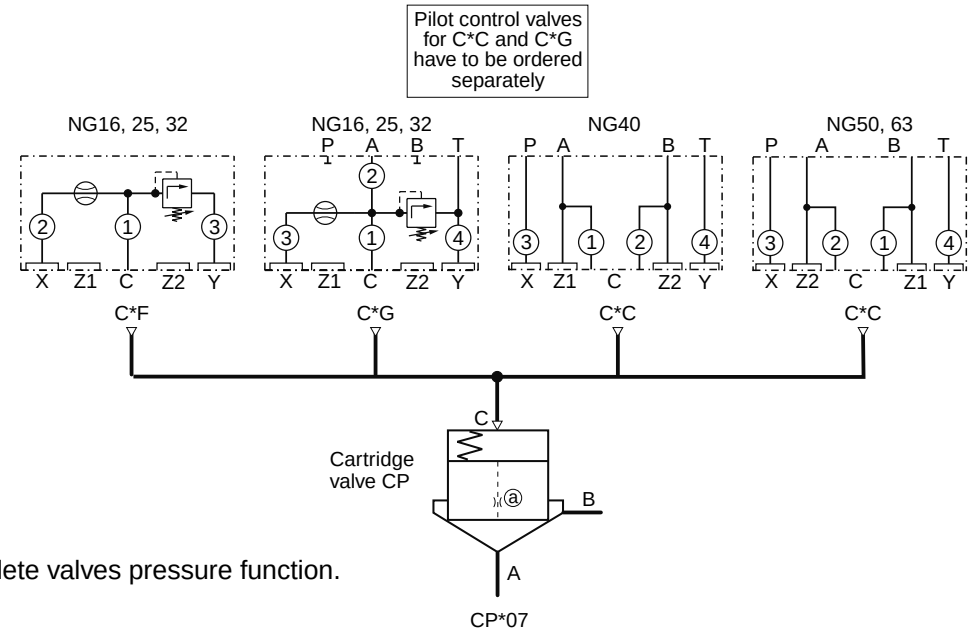

Characteristic curves see complete valves pressure function.

CE							
Cartridge	**Nominal size**	**Design**	**Poppet area ratio**	**Spring**	**Orifice**	**Seal**	**Design series** (not required for ordering)

Code	Size
016	**NG16**
025	**NG25**
032	**NG32**
040	**NG40**
050	**NG50**
063	**NG63**
080	**NG80**
100	**NG100**

Code	Normal position	Description
C	**Closed**	**No poppet sealing**
S [1]	Closed	With poppet sealing
F [2]	Open	No poppet sealing

Code	Poppet area ratio
01	**$A_A = A_C$**
04	**$A_A = 0.6A_C$, $A_B = 0.4A_C$**
07 [3]	$A_A = 0.96A_C$
08	**$A_A = 0.6A_C$, $A_B = 0.4A_C$ with dampening**

Code	Seal
N	**NBR**
V	FPM

Code	Size	Poppet	Orifice [4]
99	all	all	without orifice, open
00	NG16-NG50	01, 04	closed bottom
00	NG16-NG50	07, 08	plug
00	NG63-NG100	all	plug

Code	Spring
L	Opening pressure 0.1 bar
N	Opening pressure 0.5 bar
S	**Opening pressure 1.6 bar**
T	Opening pressure 2.5 bar
U	Opening pressure 4.0 bar

8

[1] Only for spring S, T and U. Not for poppet code 01 (NG16 to NG63).
[2] Only with spring code L, only with closed bottom.
[3] Not for NG80 and NG100.
[4] Orifice size in 1/10 mm, eg. 1.2 mm orifice - code 12. Thread size 1/16 NPTF.

CP			07				
Cartridge	**Nominal size**	**Design**	**Poppet area ratio $A_A = 0.96A_C$**	**Spring**	**Orifice**	**Seal**	**Design series** (not required for ordering)

Code	Size
016	**NG16**
025	**NG25**
032	**NG32**
040	**NG40**
050	**NG50**
063	**NG63**

Code	Normal position	Description
C	**Closed**	**No poppet sealing**
S	Closed	With poppet sealing

Code	Spring
S	**Opening pressure 1.6 bar**
T	Opening pressure 2.5 bar
U	Opening pressure 4.0 bar

Code	Seal
N	**NBR**
V	FPM

Code	Orifice [1]
00	**Plug**
09	0.9 mm for NG16
11	1.1 mm for NG25
12	1.2 mm for NG32
13	1.3 mm for NG40
14	1.4 mm for NG50
15	1.5 mm for NG63

[1] Recommended diameter.

Bold letters =
Short-term availability

For spare parts see "Accessories" in this chapter.
For orifice recommendations see "Combination Examples" in this chapter.

CE-C UK.INDD CM 16.04.15

Technical data

General										
Design type			2-way slip-in cartridge valves according to ISO 7368							
Actuation			hydraulic							
Mounting position			unrestricted							
Ambient temperature		[C°]	-20....+60							
$MTTF_D$ value		[years]	150							
Nominal size			**NG16**	**NG25**	**NG32**	**NG40**	**NG50**	**NG63**	**NG80**	**NG100**
Weight	cartridge	[kg]	0.3	0.6	1.1	1.7	3.7	7.1	12.8	27
Hydraulic										
Operating pressure	without pilot valve	[bar]	420							
	port A, B, X, Z1, Z2	[bar]	350, 420 (depending on p_{max} of pilot valves)							
	port Y	[bar]	According to pilot system, max. 350 (depending on p_{max} of pilot valves)							
Nominal flow at Δp 5 bar	poppet 01, 04, 07	[l/min]	250	450	900	1350	1800	3600	5250	8000
	poppet 08	[l/min]	230	400	800	1250	1625	3400	5000	7500
Pilot volume requirement	at poppet 01	[cm^3]	2.0	6.5	10.2	17.4	34.5	77.4	190.1	342.6
	at poppet 04		2.0	6.5	12.2	20.3	39.4	94.6	190.1	363.4
	at poppet 07		2.0	6.5	10.2	17.4	34.5	77.4	—	—
	at poppet 08		2.0	7.4	15.3	23.2	49.2	111.8	217.3	415.3
Opening pressure	flow direction A → B	[bar]	Poppet 01 / 07		spring:	L = 0.1	N = 0.5	S = 1.6	T = 2.5	U = 4.0
			Poppet 04 / 08		spring:	L = 0.2	N = 0.9	S = 2.7	T = 4	U = 6.6
Opening pressure	flow direction B → A	[bar]	Poppet 01 / 07		not possible					
			Poppet 04 / 08		spring:	L = 0.3	N = 1.3	S = 4.0	T = 6.3	U = 10.0
Fluid			Hydraulic oil according to DIN 51524							
Fluid temperature		[C°]	-20...+70 (NBR: -25...+70)							
Viscosity,	permitted	[mm^2/s]	20...400							
	recommended	[mm^2/s]	30...80							
Filtration			ISO 4406 (1999); 18/16/13							

Performance curves (without spring and poppet seal, C-chamber unloaded)

Poppet 01, 04, 07

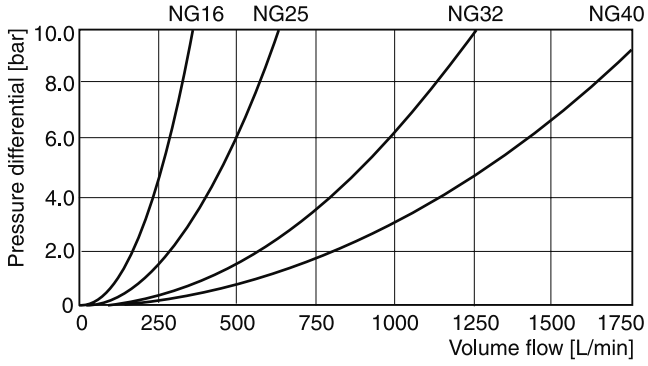

Poppet 08

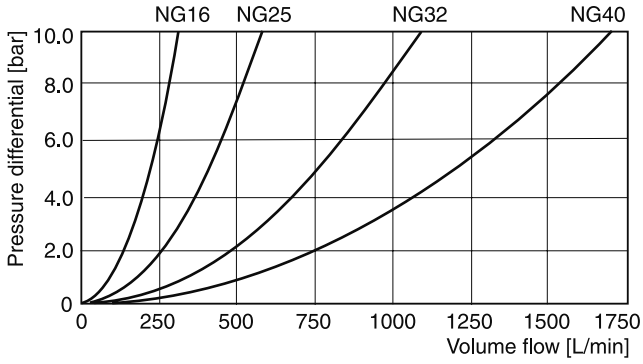

Poppet 01, 04, 07

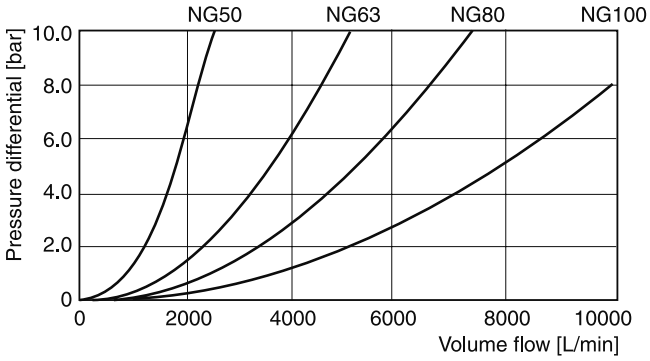

Poppet 08

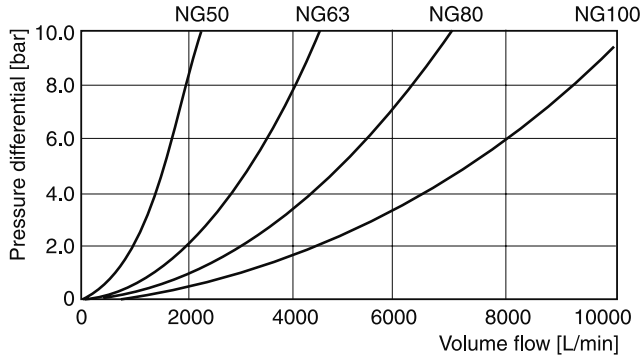

All characteristic curves measured with HLP46 at 50 °C.

CE-C UK.INDD CM 16.04.15

C		A	A			
Cover	**Nominal size**	**Cover with X-connection and gauge port G¼"**	**Without auxilliary function**	**Orifice**	**Seal**	**Design series** (not required for ordering)

Code	Size
016	**NG16**
025	**NG25**
032	**NG32**
040	**NG40**
050	**NG50**
063	**NG63**
080	**NG80**
100	**NG100**

Code	Seal
N	**NBR**
V	FPM

Code	Orifice
99	**Without orifice, open**

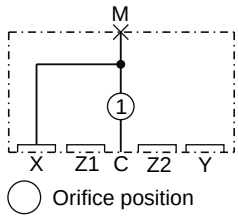

For orifice recommendations, bolt and seal kits see "Accessories" in this chapter.

Bold letters =
Short-term availability

Dimensions
NG16 to NG63

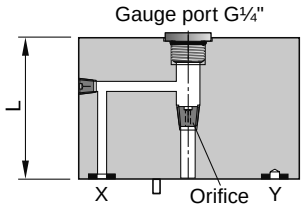

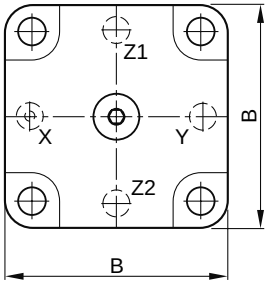

NG80 to NG100

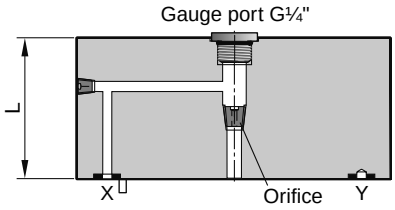

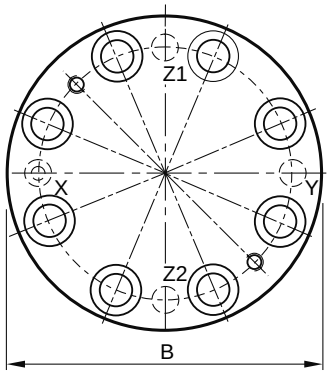

Ports Y, Z1 and Z2: O-ring recess diameter on valve body

Size	B	L	Orifice thread	Weight [kg]
NG16	65	36	1/16 NPT	0.9
NG25	85	45	1/16 NPT	1.9
NG32	102	50	1/16 NPT	2.9
NG40	125	60	1/8 NPT	5.3
NG50	140	70	1/8 NPT	8.5
NG63	180	85	1/8 NPT	15.5
NG80	Ø 250	105	1/8 NPT	34
NG100	Ø 300	120	1/8 NPT	58

C		B	N			
Cover	**Nominal size**	**Cover with X-connection and stroke limiter**	**Adjustment screw/ spindle**	**Orifice**	**Seal**	**Design series** (not required for ordering)

Code	Size
016	**NG16**
025	**NG25**
032	**NG32**
040	**NG40**
050	**NG50**
063	**NG63**
080	**NG80**
100	**NG100**

Code	Seal
N	**NBR**
V	FPM

Code	Orifice
99	**Without orifice, open**

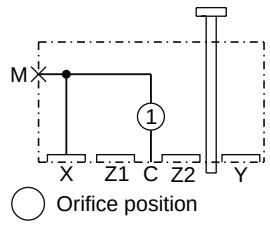

For orifice recommendations, bolt and seal kits see "Accessories" in this chapter.

Bold letters =
Short-term availability

Dimensions NG16 - NG25

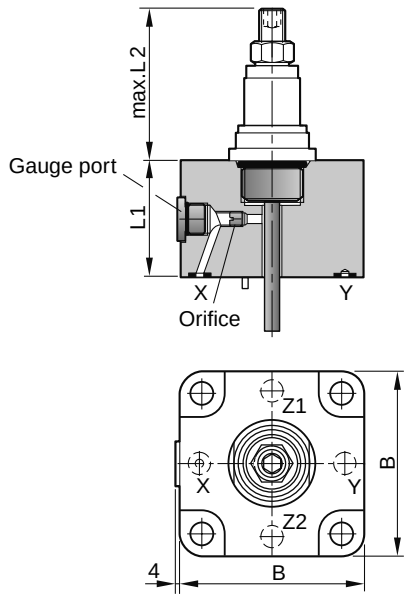

Ports Y, Z1 and Z2: O-ring recess diameter on valve body

Size	B	L1	L2 max.	Gauge port	Orifice thread	Weight [kg]
NG16	65	36	72	G 1/4"	M6	0.9
NG25	85	45	72			1.9

CE-C UK.INDD CM 16.04.15

Dimensions NG32 - NG50

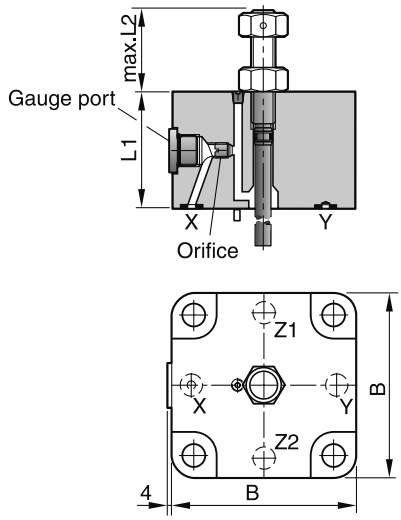

Ports Y, Z1 and Z2: O-ring recess diameter on valve body

Dimensions NG63

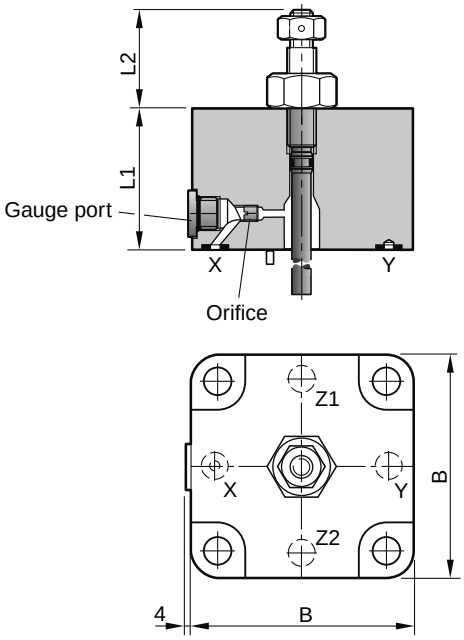

Dimensions NG80-100

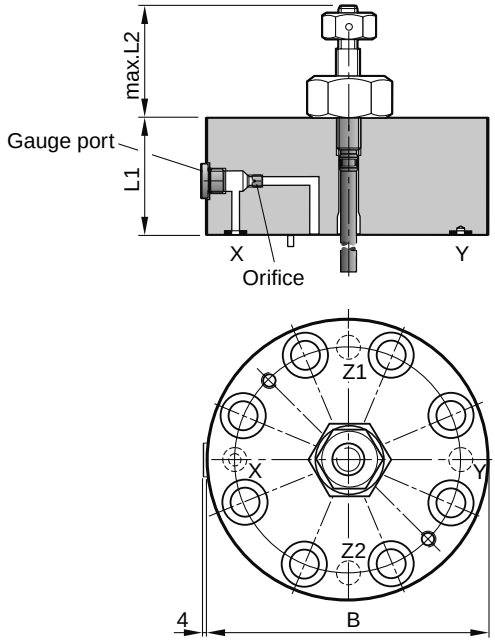

Ports Y, Z1 and Z2: O-ring recess diameter on valve body

Size	B	L1	L2 max.	Gauge port	Orifice thread	Weight [kg]
NG32	102	50	48	G¼"	1/16 NPT	2.91
NG40	125	60	50	G¼"	1/16 NPT	5.39
NG50	140	70	50	G¼"	1/16 NPT	8.41
NG63	180	85	65	G¼"	1/8 NPT	15.1
NG80	Ø 250	105	95	G¼"	1/8 NPT	34.0
NG100	Ø 300	120	120	G¼"	1/8 NPT	60.0

CE-C UK.INDD CM 16.04.15

C		C	A						
				1	2	3	4		
Cover	**Nominal size**	**Cover for pilot system mounting**	**Without auxilliary function**	**Orifice / choke**				**Seal**	**Design series** (not required for ordering)

Code	Size
016	**NG16**
025	**NG25**
032	**NG32**
040	**NG40**
050	**NG50**
063	**NG63**
080	**NG80**
100	**NG100**

Code	Seal
N	**NBR**
V	FPM

Code	Orifice
99	**Without orifice, open**
00	**Plug**

NG16 to NG40

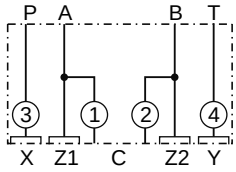

NG50 to NG100

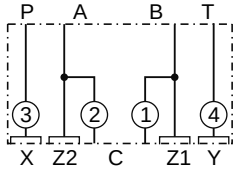

Orifice position

Attention:

For NG50 and larger:
If pilot system NG06 should be used, mount adapter plate PADA 1007/A-B/B-A or PADA 1007/A-A/B-B (NG10 to NG06) see "Accessories" in this chapter.

For orifice recommendations, bolt and seal kits see "Accessories" in this chapter.

Bold letters =
Short-term availability

8

Dimensions NG16

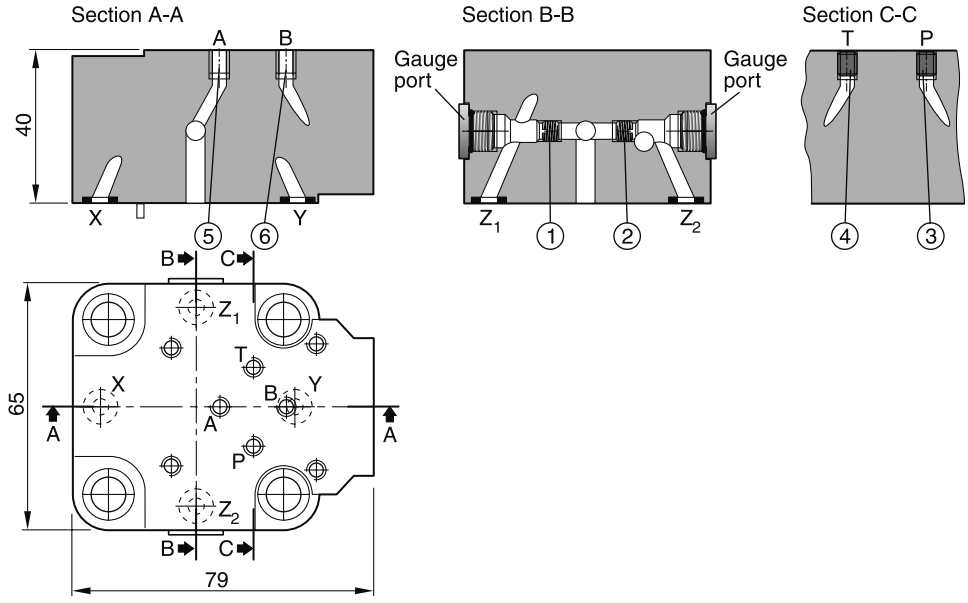

Dimensions NG25 to NG40

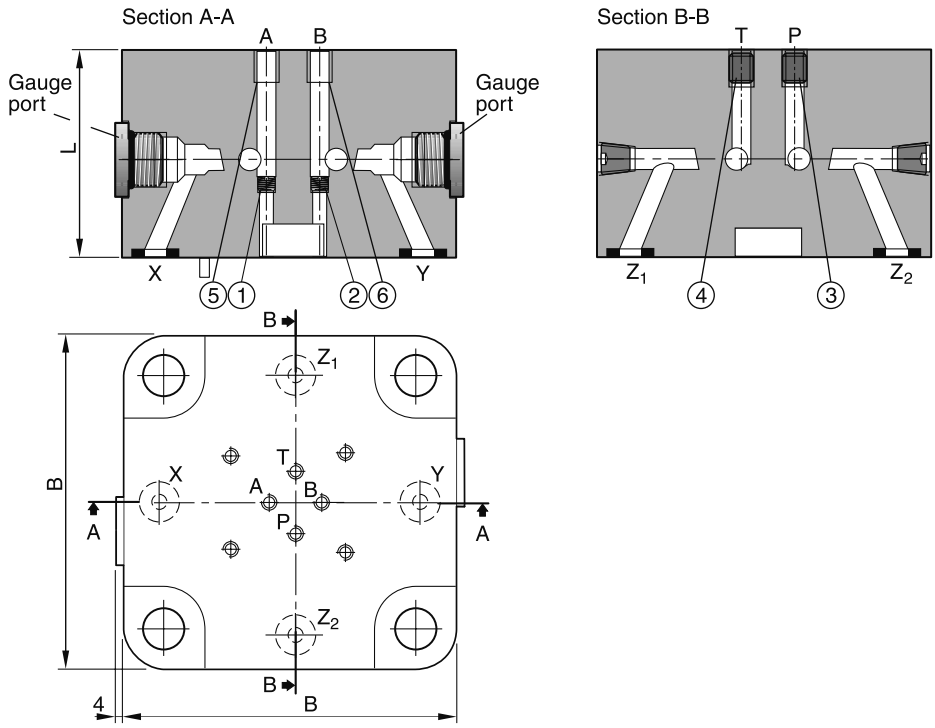

Dimensions NG50 to NG63

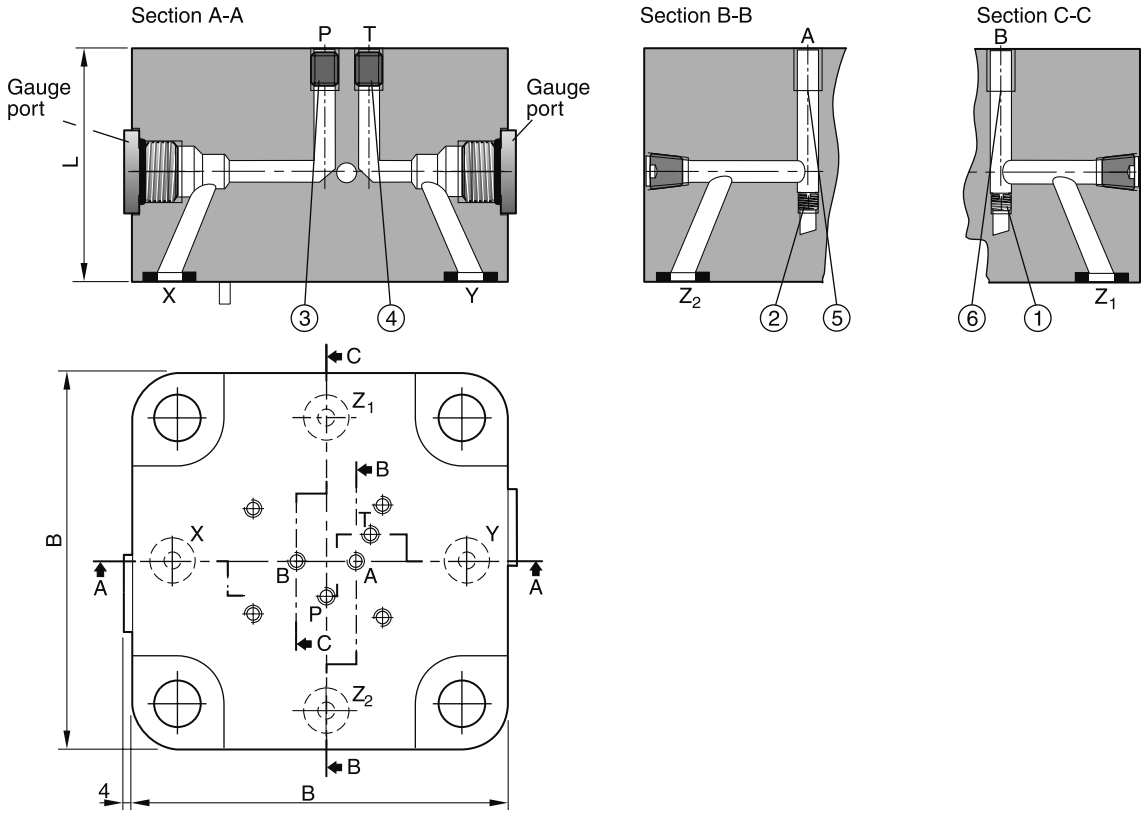

CE-C UK.INDD CM 16.04.15

Dimensions NG80 to NG100

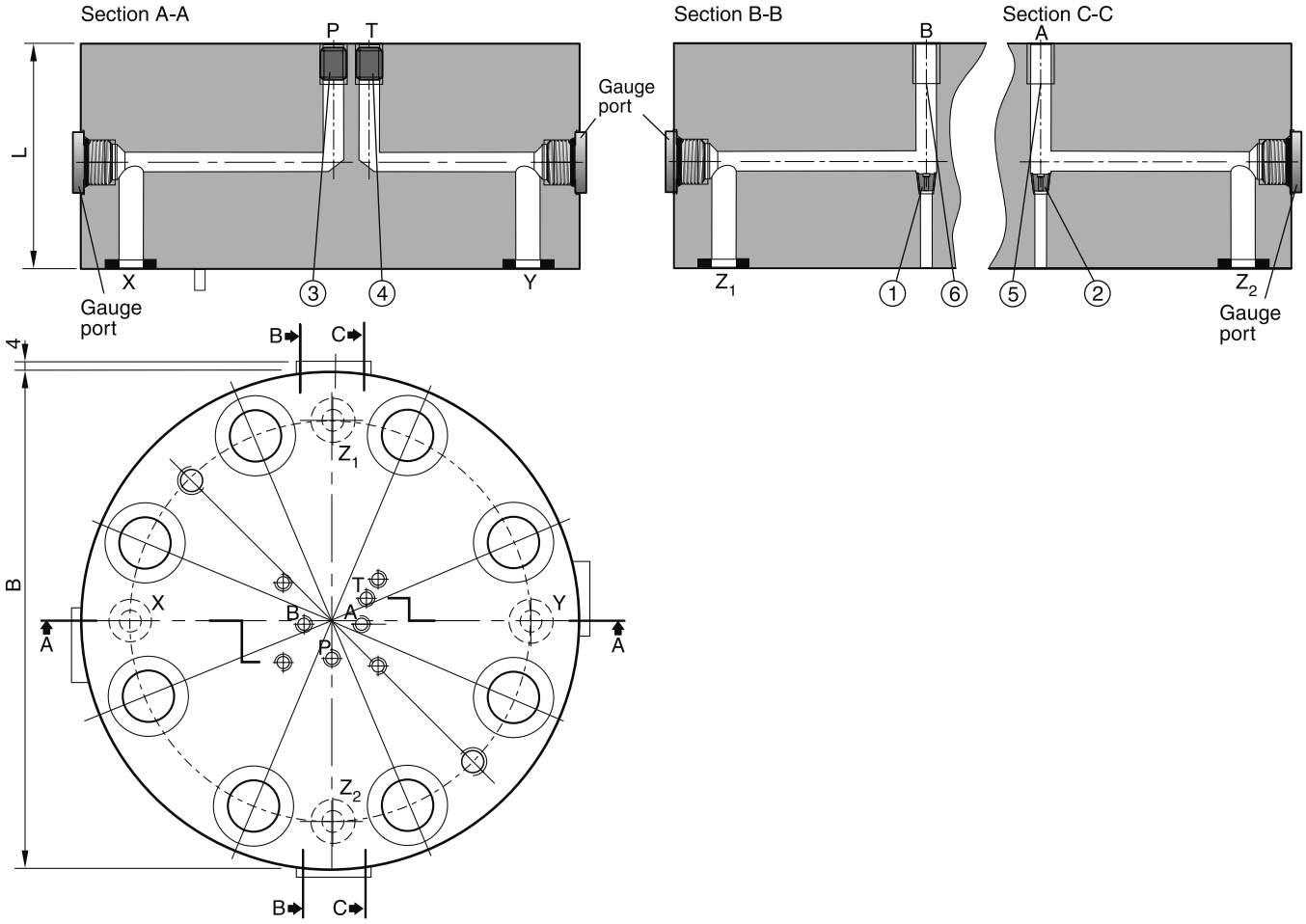

Size	B	L	Gauge port	Weight [kg]	Orifice thread					
					1	2	3	4	5	6
NG16	79 [1)]	40	G¼"	1.0	M5	M5	M5	M5	M5	M5
NG25	85	45	G¼"	1.9	M5	M5	M6	M6	M6	M6
NG32	102	50	G¼"	2.9	M5	M5	M6	M6	M6	M6
NG40	125	60	G¼"	5.3	M5	M5	M6	M6	M6	M6
NG50	140	70	G¼"	8.5	M6	M6	M8	M8	M8	M8
NG63	180	85	G¼"	15.3	M6	M6	M8	M8	M8	M8
NG80	Ø 250	105	G¼"	34	1/16 NPT	1/16 NPT	1/8 NPT	1/8 NPT	1/8 NPT	1/8 NPT
NG100	Ø 300	120	G¼"	60	1/16 NPT	1/16 NPT	1/8 NPT	1/8 NPT	1/8 NPT	1/8 NPT

[1)] Width 65 mm.

C		F						
					1	2	3	
Cover	**Nominal size**	**Cover with pressure relief valve**	**Pressure range**	**Pressure adjustment**	**Orifice / choke**			**Seal**	**Design series** (not required for ordering)

Code	Size
016	**NG16**
025	**NG25**
032	**NG32**

Code	Seal
N	**NBR**
V	FPM

Code	Pressure range [bar]
07	**75**
10	**105**
17	**175**
21	**210**
25	**250**
35	**350**

Code	Orifice
99	**Without orifice, open**

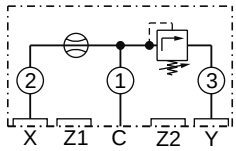

Orifice position

Code	Adjustment
S	**Hand knob (standard)**
A	Acorn nut with lead seal
L	Cylinder lock

Bold letters =
Short-term availability

For orifice recommendations, bolt and seal kits see "Accessories" in this chapter.

8

Dimensions

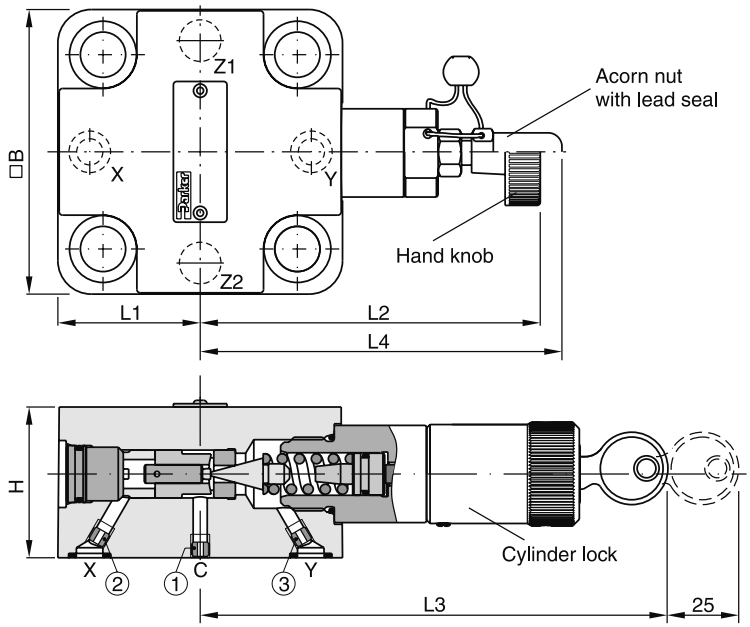

Ports Z1 and Z2: O-ring recess diameter on valve body

Size	B	H	L1	L2 max.	L3	L4	Orifice thread		
							1	2	3
NG16	65 [1)]	40	32.5	114	125.5	117	M5	M4	M5
NG25	85	45	42.5	102	114	105	M5	M5	M5
NG32	102	50	51	95	106	97.5	M6	M6	M6

[1)] Width 79 mm.

CE-C UK.INDD CM 16.04.15

C		G							
					1	2	3	4	

Cover — **Nominal size** — **Cover with pressure relief valve and pilot system mounting** — **Pressure range** — **Pressure adjustment** — **Orifice / choke** (1, 2, 3, 4) — **Seal** — **Design series** (not required for ordering)

Code	Size
016	**NG16**
025	**NG25**
032	**NG32**

Code	Seal
N	**NBR**
V	FPM

Code	Pressure range [bar]
07	**75**
10	**105**
17	**175**
21	**210**
25	**250**
35	**350**

Code	Orifice
99	**Without orifice, open**

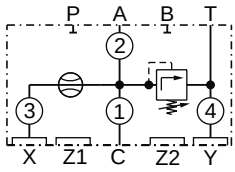

Orifice position

Code	Adjustment
S	**Hand knob (standard)**
A	Acorn nut with lead seal
L	Cylinder lock

Bold letters =
Short-term availability

For orifice recommendations, bolt and seal kits see "Accessories" in this chapter.

Dimensions

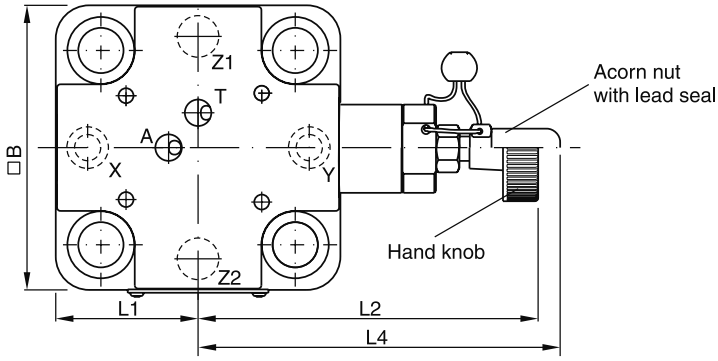

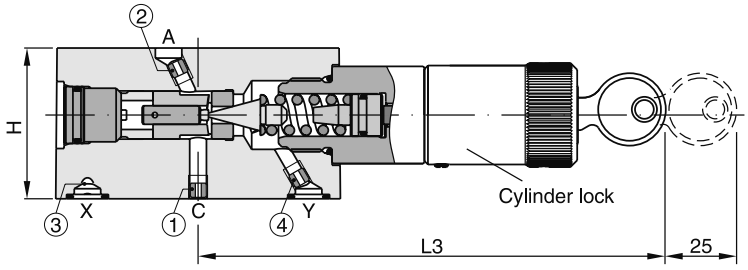

Ports Z1 and Z2: O-ring recess diameter on valve body

Size	B	H	L1	L2 max.	L3	L4	Orifice thread			
							1	2	3	4
NG16	65 [1)]	40	32.5	114	125.5	117	M5	M5	M4	M5
NG25	85	45	42.5	102	114	105	M5	M5	M5	M5
NG32	102	50	51	95	106	97.5	M6	M6	M6	M6

[1)] Width 79 mm.

CE-C UK.INDD CM 16.04.15

Ordering code

C		H	N					N	
				1	2	3	4		
Cover	Nominal size	Stroke limiter and DC valve mounting pattern	Screws with lock nut	Orifice / choke				Seal NBR	Design series (not required for ordering)

Code	Size
016	**NG16**
025	**NG25**
032	**NG32**
040	**NG40**
050	**NG50**
063	**NG63**
080	**NG80**
100	**NG100**

Code	Orifice
99	**Without orifice, open**
00	**Plug**

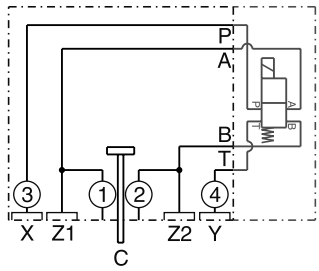

Orifice position

Attention:

For NG63, 80 and 100:
If pilot system NG06 should be used, mount adapter plate PADA 1007/A-B/B-A or PADA 1007/A-A/B-B (NG10 to NG06), see "Accessories" in this chapter.

For orifice recommendations, bolt and seal kits see "Accessories" in this chapter.

Bold letters =
Short-term availability

8

Dimensions NG16

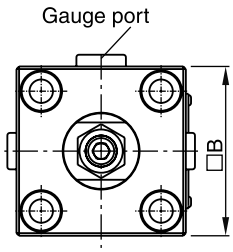

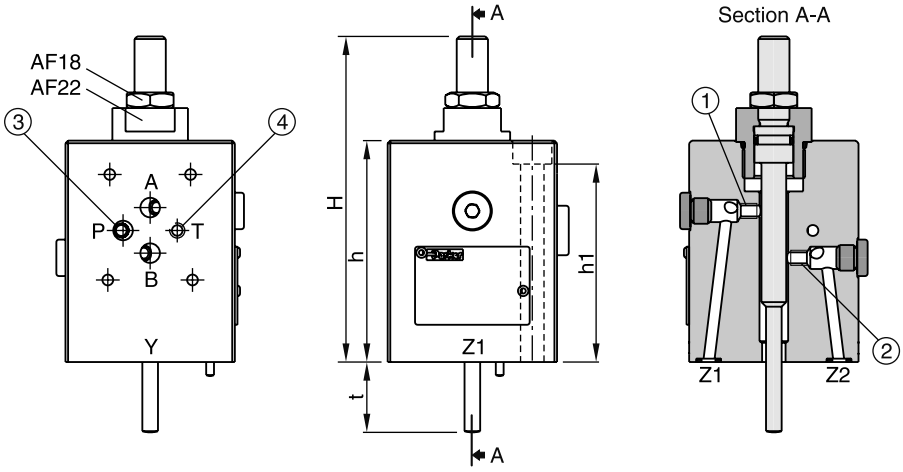

Dimensions NG25 to NG63

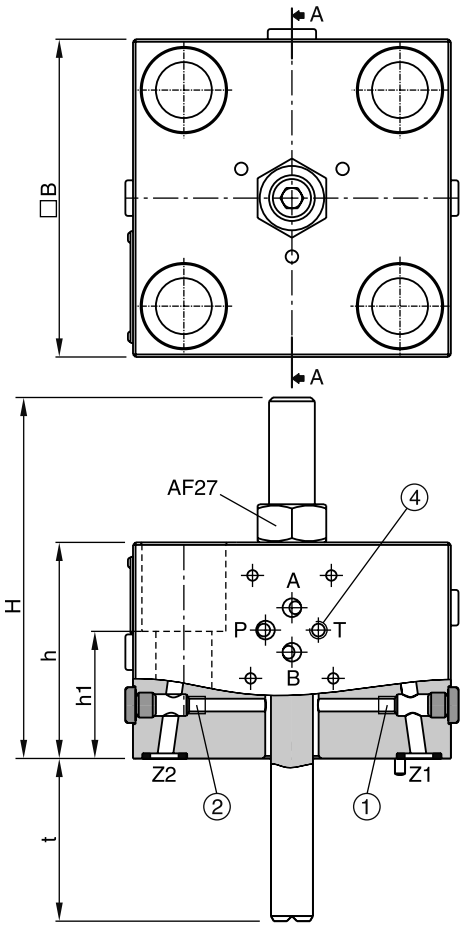

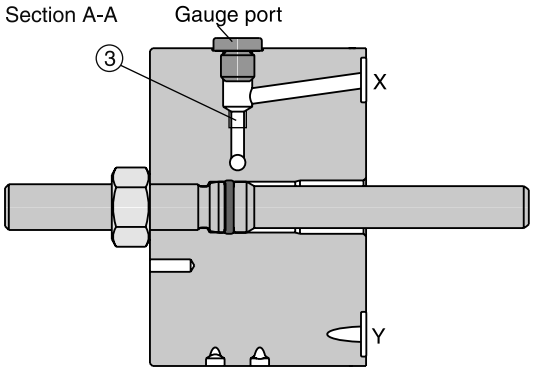

8

Dimensions NG80 to NG100

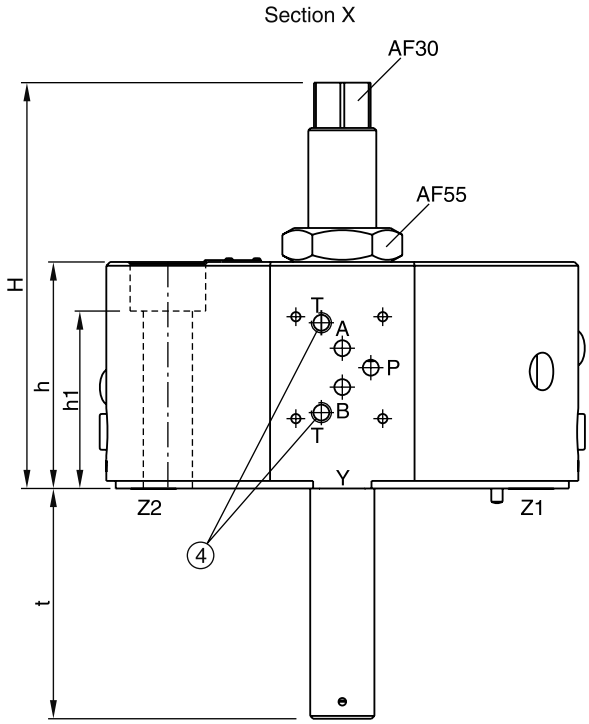

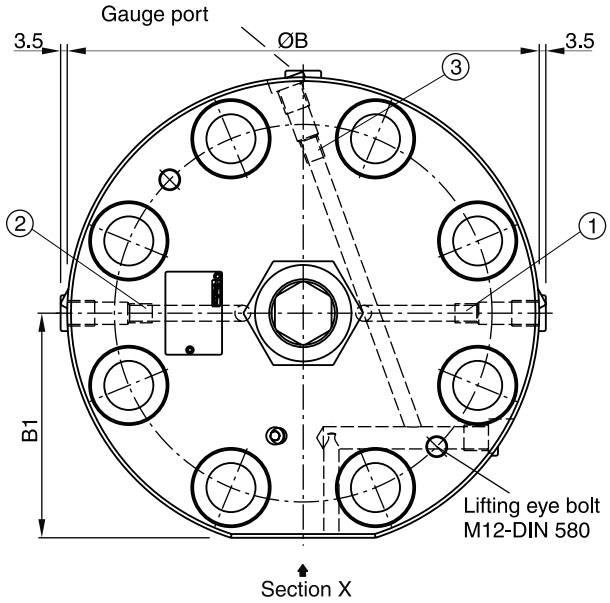

8

Size	B	B1	H	h	h1	t	Gauge port	Orifice thread			
								1	2	3	4
NG16	65	–	125	85	76	27	G1/4	M5	M5	M5	M5
NG25	85	–	114	85	70	36.5	G1/4	M6	M6	M6	M6
NG32	102	–	132.5	85	56	47.5	G1/4	M6	M6	M6	M6
NG40	125	–	142	85	50	64	G1/4	M6	M6	M6	M6
NG50	140	–	147.5	85	60	72.5	G1/4	M8	M8	M8	M8
NG63	180	–	161	110	75	90	G1/4	M8	M8	M8	M8
NG80	Ø 250	119	215	120	94	122	G1/4	1/8 NPT	1/8 NPT	1/8 NPT	1/8 NPT
NG100	Ø 300	144	240	120	85	145	G1/4	1/8 NPT	1/8 NPT	1/8 NPT	1/8 NPT

Ordering code

C		V	A						
				1	2	3	4		
Cover	Nominal size	Cover with shuttle valve	w/o additional option	Orifice / choke				Seal	Design series (not required for ordering)

Code	Size
016	**NG16**
025	**NG25**
032	**NG32**
040	**NG40**
050	**NG50**
063	**NG63**

Bold letters =
Short-term availability

Code	Seal
N	**NBR**
V	FPM

Code	Orifice
99	**Without orifice, open**

For orifice recommendations, bolt and seal kits see "Accessories" in this chapter.

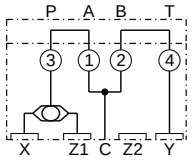

Orifice position

Dimensions

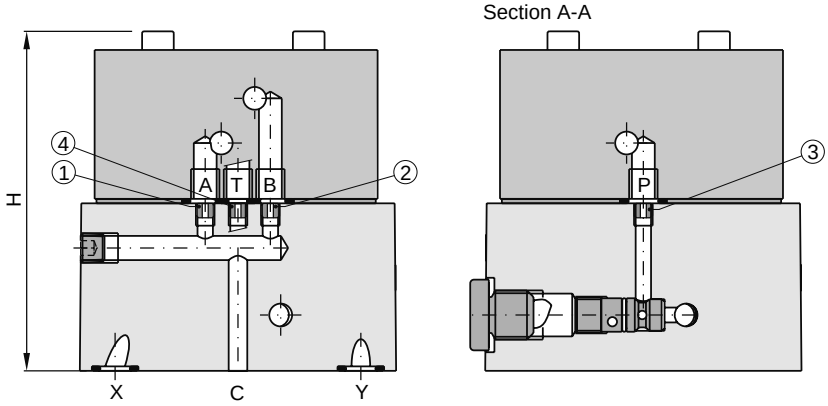

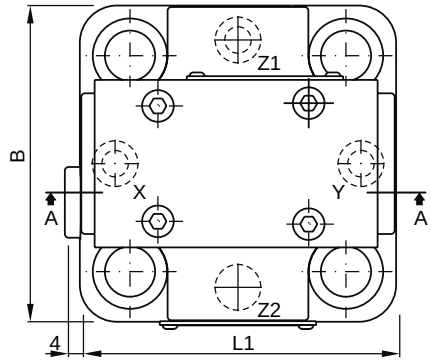

Port Z2: O-ring recess diameter on valve body

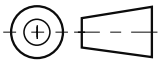

Size	B	H	L1	Orifice thread			
				1	2	3	4
NG16	65	86.5	85	M5	M5	M5	M5
NG25	85	91.5	85	M5	M5	M5	M5
NG32	102	96.5	102	M5	M5	M5	M5
NG40	125	106.5	125	M6	M6	M6	M6
NG50	140	126.5	140	M8	M8	M8	M8
NG63	180	141	180	M8	M8	M8	M8

CE-C UK.INDD CM 16.04.15

C		W	A						
				1	2	3	4		
Cover	**Nominal size**	**Cover with shuttle valve and pilot system mounting**	**w/o additional option**		**Orifice / choke**			**Seal**	**Design series** (not required for ordering)

Code	Size
016	**NG16**
025	**NG25**
032	**NG32**
040	**NG40**
050	**NG50**
063	**NG63**

Bold letters =
Short-term availability

Code	Seal
N	**NBR**
V	FPM

Code	Orifice
99	**Without orifice, open**

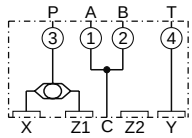

Orifice position

For orifice recommendations, bolt and seal kits see "Accessories" in this chapter.

Dimensions

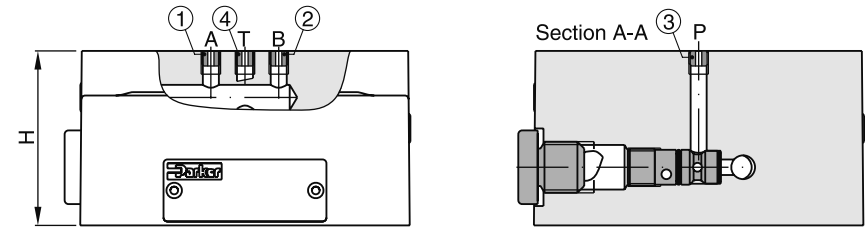

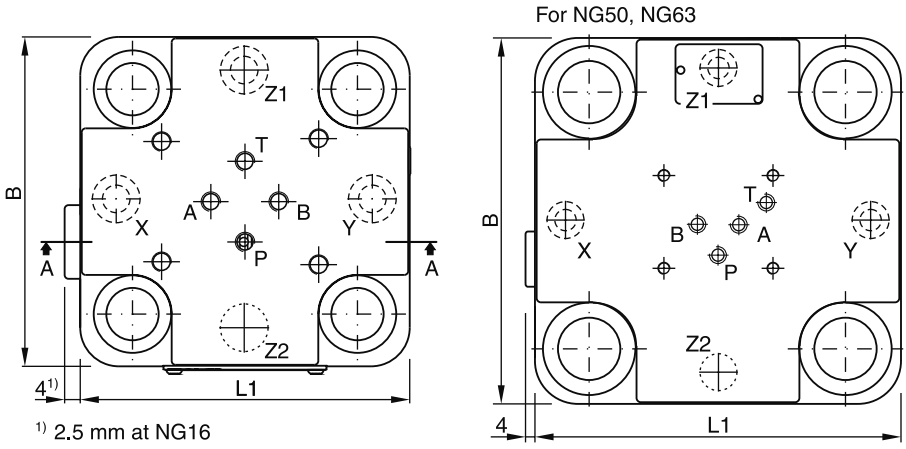

[1] 2.5 mm at NG16

Port Z2: O-ring recess diameter on valve body

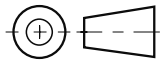

Size	B	H	L1	Orifice thread			
				1	2	3	4
NG16	65	40	77.5	M5	M5	M5	M5
NG25	85	45	85	M5	M5	M5	M5
NG32	102	50	102	M5	M5	M5	M5
NG40	125	60	125	M6	M6	M6	M6
NG50	140	70	140	M8	M8	M8	M8
NG63	180	85	180	M8	M8	M8	M8

CE-C UK.INDD CM 16.04.15

Pilot valve with pressure relief function R06M, sub-plate mounting NG06, see combination examples. $MTTF_D$ value 150 years, flow rate maximum 5 l/min.

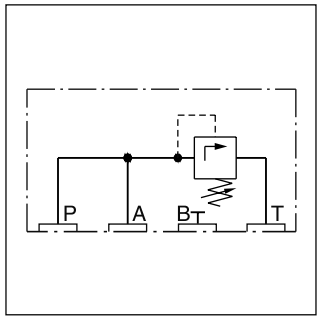

Ordering code

R06M [ ] [ ] **4** [ ] [ ]

Pressure range — **Pressure adjustment** — **Pilot oil** — **Seal** — **Design series** (not required for ordering)

Code	Pressure range [bar]
10	**105**
17	**175**
21	**210**
25	**250**
35	**350**

Code	Seal
N	**NBR**
V	FPM

Code	Adjustment
S	**Hand knob (standard)**
A	Acorn nut with lead seal
L	Cylinder lock

Bold letters =
Short-term availability

8

Dimensions

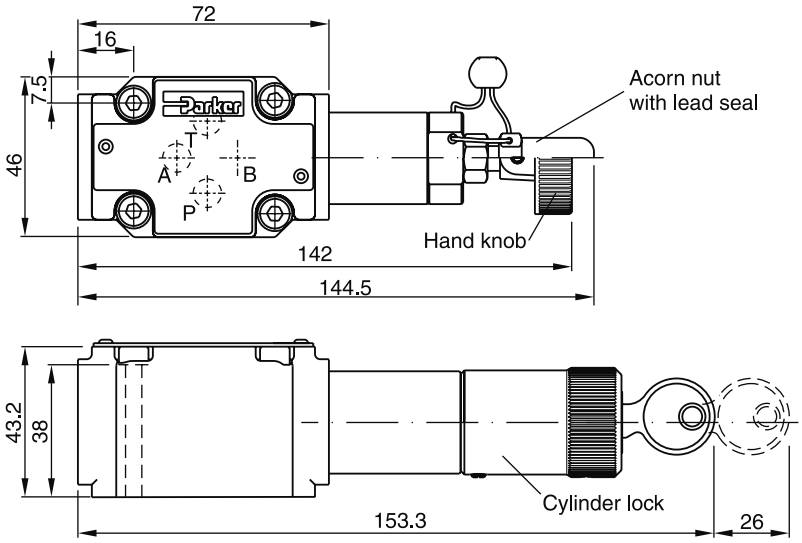

Pilot valve with pressure relief function RS06M, sandwich plate mounting NG06, see combination examples. $MTTF_D$ value 150 years, flow rate maximum 5 l/min.

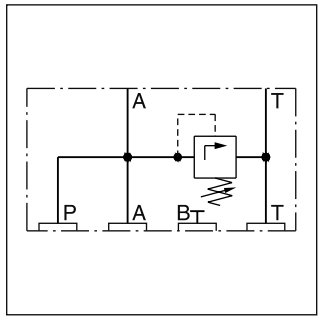

Ordering code

RS06M [ ] [ ] **4** [ ] [ ]

Pressure range | **Pressure adjustment** | **Pilot oil** | **Seal** | **Design series** (not required for ordering)

Code	Pressure range [bar]
10	**105**
17	**175**
21	**210**
25	**250**
35	**350**

Code	Seal
N	**NBR**
V	FPM

Code	Adjustment
S	**Hand knob (standard)**
A	Acorn nut with lead seal
L	Cylinder lock

Bold letters =
Short-term availability

8

Dimensions

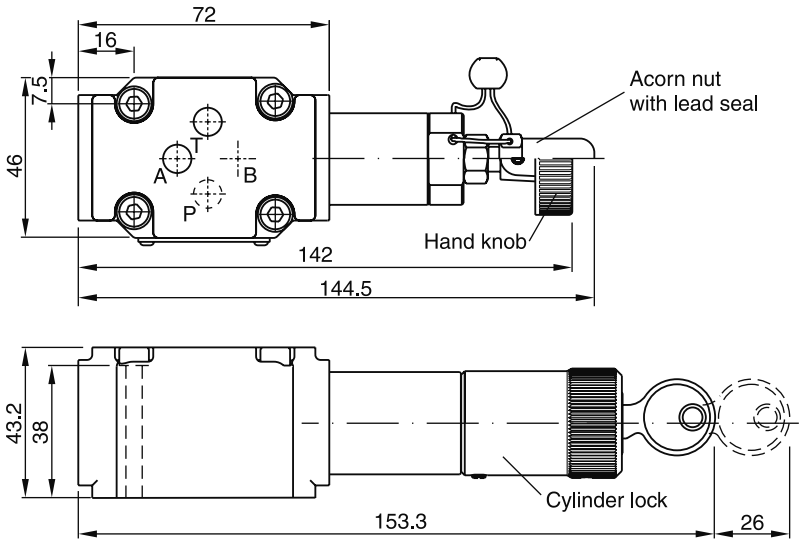

Pilot valve with proportional relief function RPDM2*,
sandwich mounting NG06.
$MTTF_D$ value 150 years, flow rate maximum 5 l/min.

*For technical details see series RE06M*W.

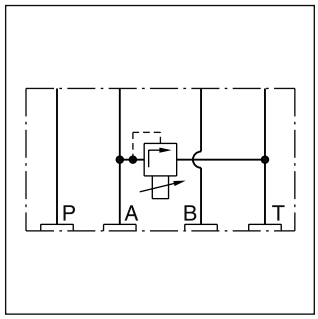

RPDM2AT

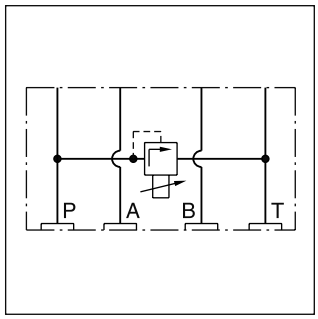

RPDM2PT

Ordering code

RPDM	2				V	
	Pressure adjustment	**Pressure relief**	**Pressure range**	**Solenoid voltage**	**Seal FPM**	**Design series** (not required for ordering)

Code	Adjustment
AT	A to T
PT	P to T

Code	Solenoid voltage
K	**12 V, 2.3 A**
X	16 V, 1.3 A

Code	Pressure range [bar]
10	105
17	175
25	250
35	350

Bold letters =
Short-term availability

Dimensions

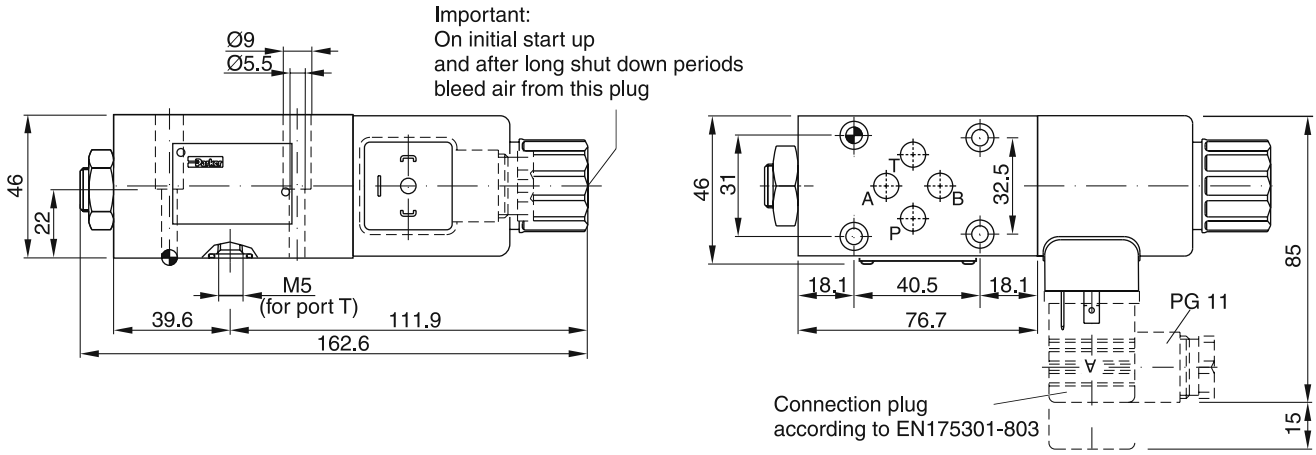

Sandwich valve with pressure relief function ZUDB, sandwich plate mounting NG06, see combination examples. $MTTF_D$ value 150 years, flow rate maximum 5 l/min.

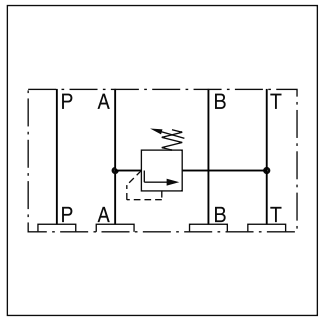

ZUDB1AT*

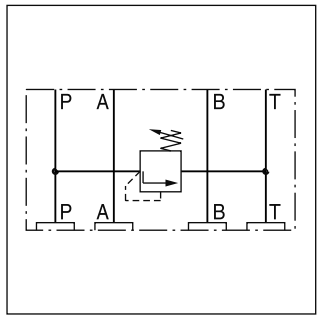

ZUDB1PT*

Ordering code

[ ] – **ZUDB1** [ ] [ ] **Z07** [ ]

Seal | Pressure relief | Pressure adjustment | Pressure range

Code	Seal
omit	**NBR**
V	FPM

Code	Pressure relief
AT	**A to T**
PT	**P to T**

Code	Pressure range [bar]
B	**70**
E	**175**
G	**250**
K	**350**

Code	Adjustment
2	**Hexagon screw with lock nut**
61	Cylinder lock

Bold letters =
Short-term availability

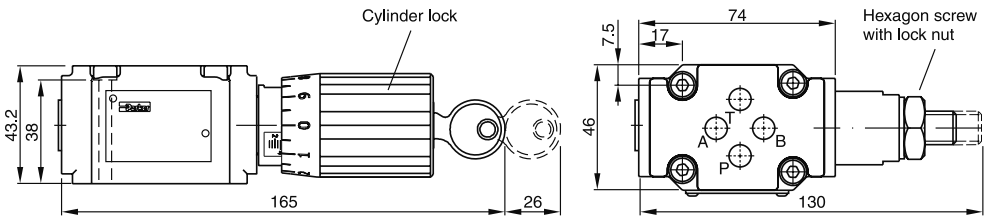

access08.INDD CM 16.04.15

Pilot valve with preload function DSB*P*, subplate mounting NG06, see combination examples.
$MTTF_D$ value 150 years, flow rate maximum 5 l/min.

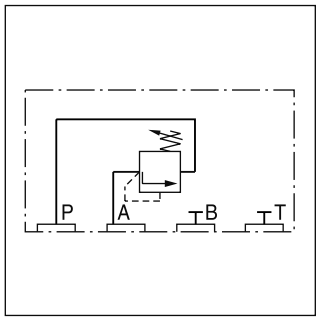

□ – **DSBA100** □ **P07** □

Seal — **Pressure adjustment** — **Pressure range**

Code	Seal
omit	**NBR**
V	FPM

Code	Adjustment
2	**Hexagon screw with lock nut**
61	Cylinder lock

Code	Pressure range [bar]
B	**70**
E	**175**
G	**250**
K	**350**

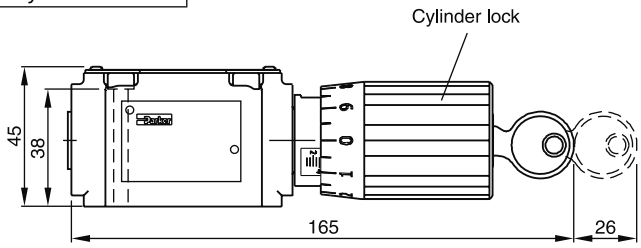

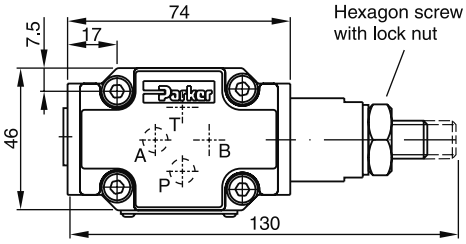

Pilot valve with preload function DSB*Z*, sandwich plate mounting NG06, see combination examples.
$MTTF_D$ value 150 years, flow rate maximum 5 l/min.

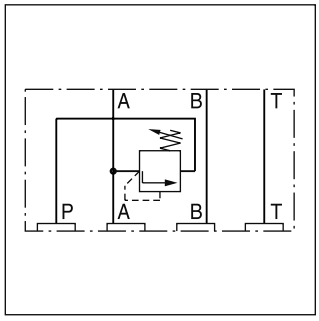

□ – **DSBA100** □ **Z07** □

Seal — **Pressure adjustment** — **Pressure range**

Code	Seal
omit	**NBR**
V	FPM

Code	Adjustment
2	**Hexagon screw with lock nut**
61	Cylinder lock

Code	Pressure range [bar]
B	**70**
E	**175**
G	**250**
K	**350**

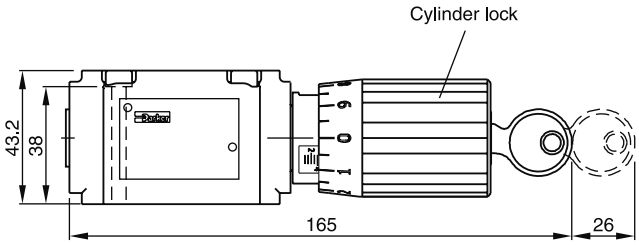

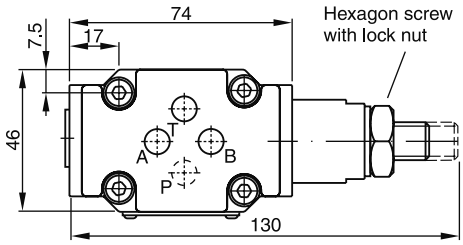

Bold letters =
Short-term availability

Pilot valve with unloading function UR06M, subplate mounting NG06, see combination examples. $MTTF_D$ value 150 years, flow rate maximum 5 l/min.

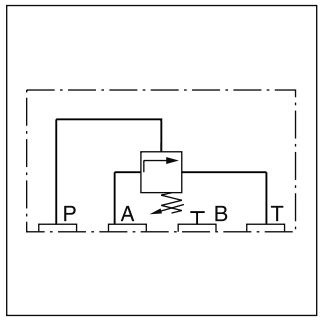

UR	06	M			4	
			Pressure range	Adjustment	Pilot oil drain internal	Seal

Code	Pressure range [bar]
07	70
17	175
25	250
35	350

Code	Seal
N	NBR
V	FPM

Code	Adjustment
S	Hand knob (standard)
A	Acorn nut with lead seal
L	Cylinder lock

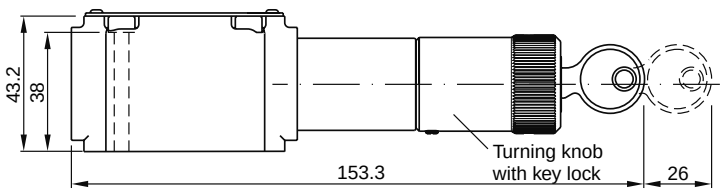

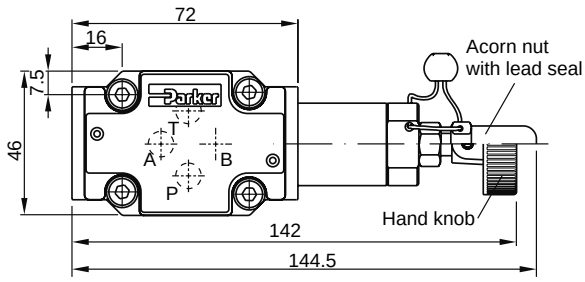

8

Pilot valve with unloading function US06M, sandwich plate NG06, see combination examples. $MTTF_D$ value 150 years, flow rate maximum 5 l/min.

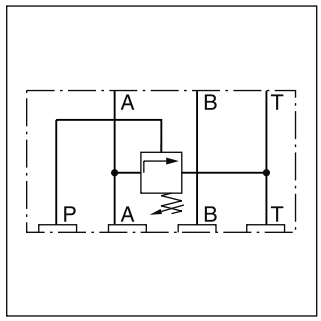

US	06	M			4	
			Pressure range	Adjustment	Pilot oil drain internal	Seal

Code	Pressure range [bar]
07	70
17	175
25	250
35	350

Code	Seal
N	NBR
V	FPM

Code	Adjustment
S	Hand knob (standard)
A	Acorn nut with lead seal
L	Cylinder lock

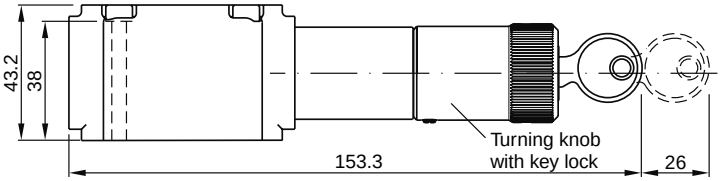

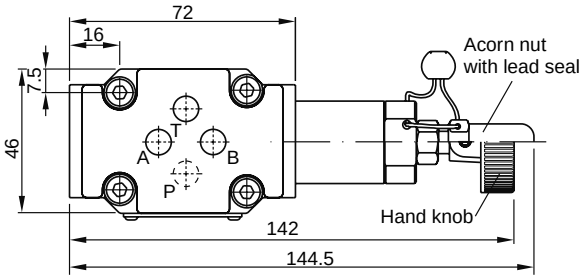

access08.INDD CM 16.04.15

Pilot valve for pressure sequence function S06M, subplate mounting NG06, see combination examples.

$MTTF_D$ value 150 years, flow rate maximum 5 l/min.

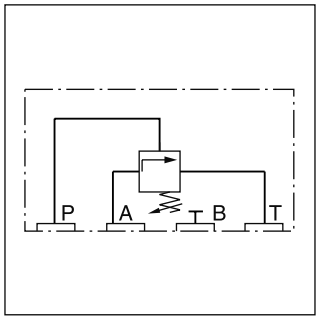

Ordering code

S06M [ ] [ ] **4** [ ] [ ]

Pressure range — **Pressure adjustment** — **Pilot oil inlet internal/ outlet internal** — **Seal** — **Design series** (not required for ordering)

Code	Pressure range [bar]
07	**70**
17	**175**
25	**250**
35	**350**

Code	Seal
N	**NBR**
V	FPM

Code	Adjustment
S	**Hand knob (standard)**
A	Acorn nut with lead seal
L	Cylinder lock

Bold letters =
Short-term availability

8

Dimensions

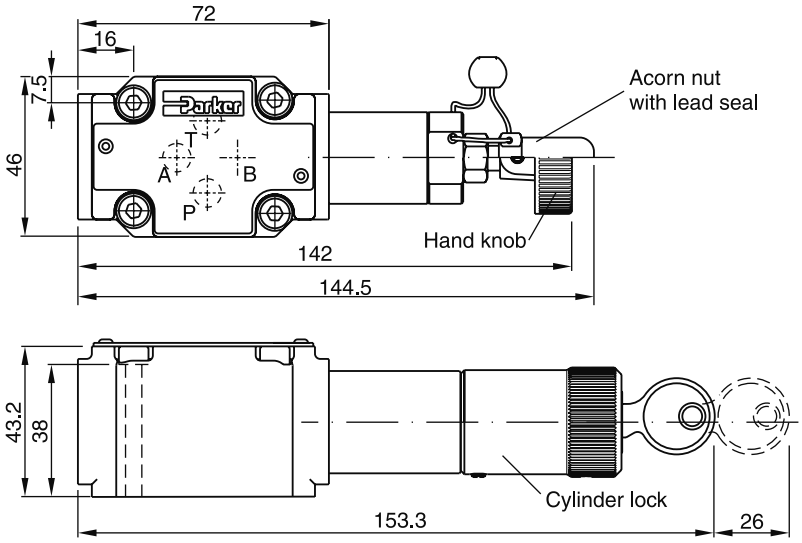

Check valve, hydraulically pilot operated NG06
with pilot control, for subplate mounting.

$MTTF_D$ value 75 years, flow rate maximum 5 l/min.

Ordering code

SVLA1006P07

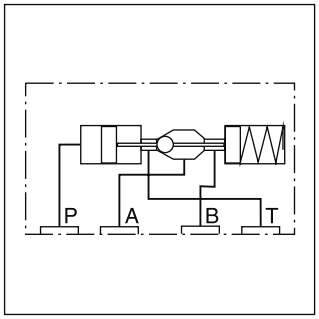

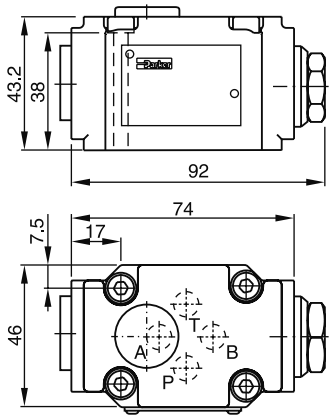

Shuttle valve - sandwich plate mounting NG06

$MTTF_D$ value 150 years, flow rate maximum 5 l/min.

Ordering code

ZSRA1PP0Z07

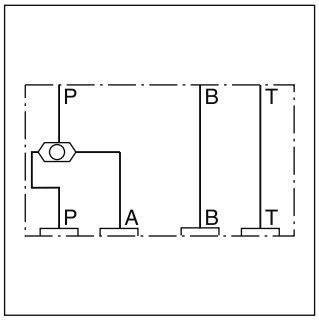

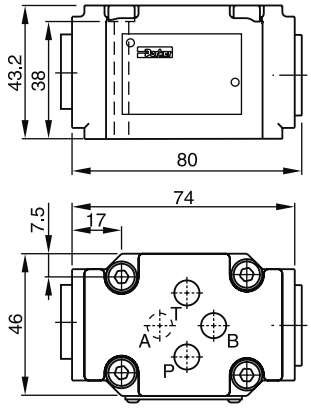

Shuttle valve - sandwich plate mounting NG06

$MTTF_D$ value 150 years, flow rate maximum 5 l/min.

Ordering code

ZSRB1AA0Z07

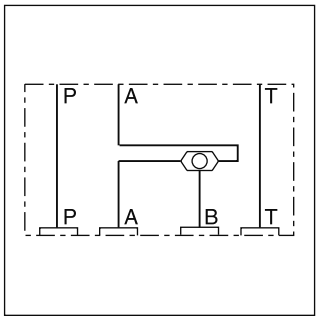

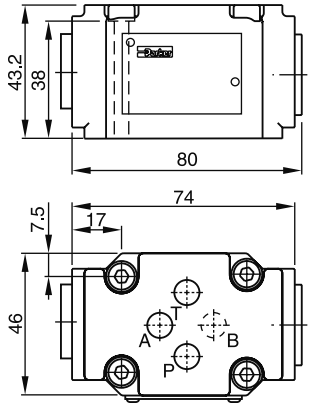

8

access08.INDD CM 16.04.15

Symbol	Type	Size	Hight
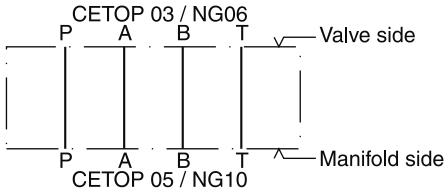	**PADA 1007-AA-BB**	NG10-NG06	25
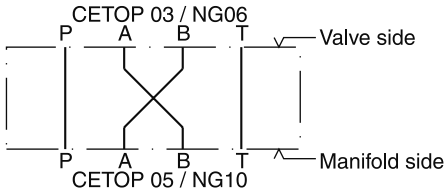	**PADA 1007/A-B/B-A**	NG10-NG06	25
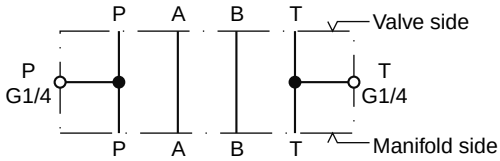	H06-1044	NG06	30
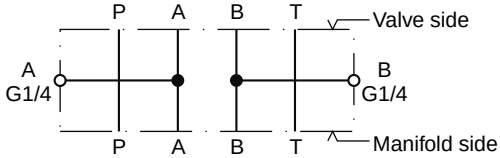	**H06-1039**	NG06	30
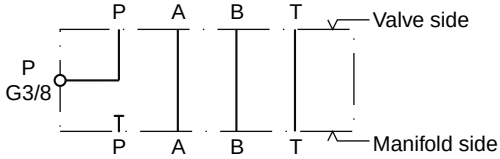	**H06-504**	NG06	30
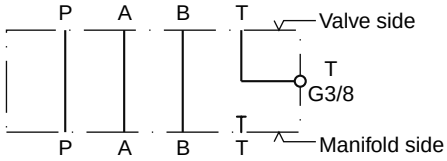	**H06-711**	NG06	30
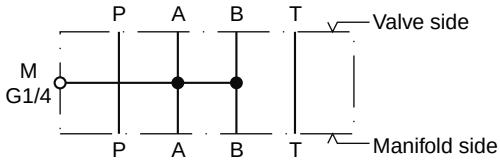	H06-1274	NG06	30
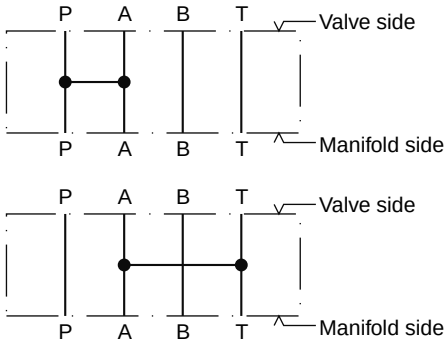	**H06-1040**	NG06	30

Attention:
Details for cover-, sandwich- and adaptor plates see chapter 12.

Bold letters =
Short-term availability

access08.INDD CM 16.04.15

Symbol	Type	Size	Hight
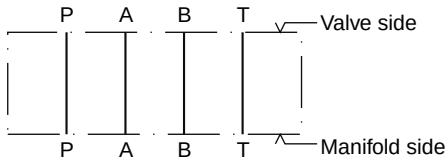	**H06DO-1291**	NG06	10
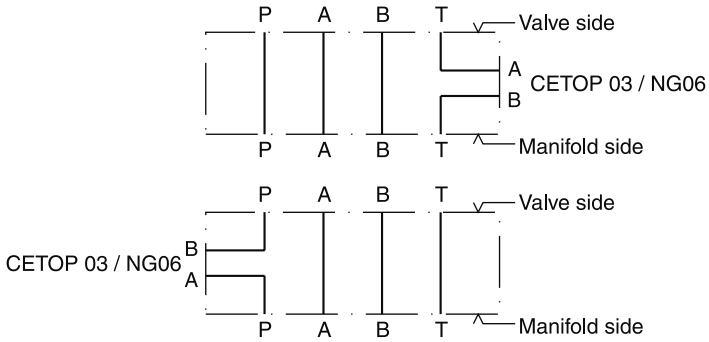	H06DU-814	NG06	71.3
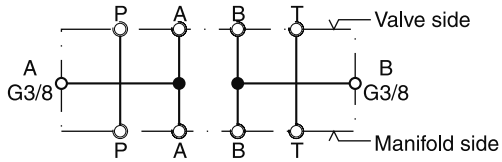 All ports can be equipped with orifices or plugs (1/16NPT)	CS06040N	NG06	40.3
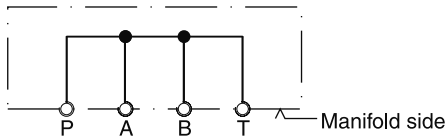 All ports can be equipped with orifices or plugs (1/16NPT)	CS06082N	NG06	40.3
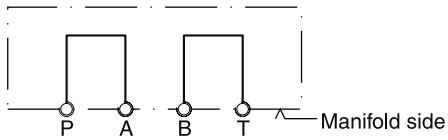 All ports can be equipped with orifices or plugs (1/16NPT)	CS06080N	NG06	40.3
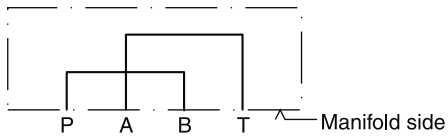	**D51DC071D**	NG06	26.3
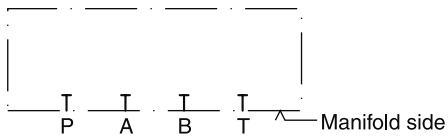	**D51VP071C** **D51VP101D**	NG06 NG10	26.3 26.9

Attention:
Details for cover-, sandwich- and adaptor plates see chapter 12.

Bold letters =
Short-term availability

Poppets, sleeves, spacer rings

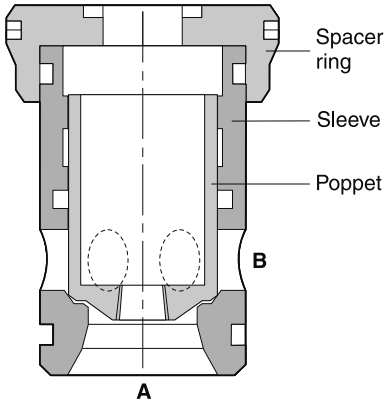

Size	16	25	32	40	50	63	80	100
Poppet 01	RK-45036369	RK-45036379	RK-45036392	RK-45036409	RK-45036421	RK-45036437	RK-35036449	RK-35036467
Poppet 04	RK-45036370	RK-45036380	RK-45036395	RK-45036406	RK-45036422	RK-45036436	RK-35036460	RK-35036468
Poppet 07	RK-35037531	RK-45036964	RK-45036965	RK-45036966	RK-45036967	RK-45036968	—	—
Poppet 08	RK-45036368	RK-45036381	RK-45036391	RK-45036408	RK-45036424	RK-45036438	RK-35036459	RK-35036469
CE-sleeve	RK-35038871	RK-35038872	RK-35038873	RK-35036403	RK-35036417	RK-25036432	RK-25036452	RK-25036470
CP-sleeve	RK-35039384	RK-35039385	RK-35039386	RK-35039387	RK-35039388	RK-35039389	—	—
Spacer ring	RK-35036364	RK-35036375	RK-45036393	RK-35036402	RK-35036416	RK-35036435	RK-25036453	RK-25036471

8

Springs, seals, fitting bolts

Size / Spring [1]	16	25	32	40	50	63	80	100
Type L; 0.1 bar	FK-CE016-L	FK-CE025-L	FK-CE032-L	FK-CE040-L	FK-CE050-L	FK-CE063-L	FK-CE080-L	FK-CE100-L
Type N; 0.5 bar	FK-CE016-N	FK-CE025-N	FK-CE032-N	FK-CE040-N	FK-CE050-N	FK-CE063-N	FK-CE080-N	FK-CE100-N
Type S; 1.6 bar	FK-CE016-S	FK-CE025-S	FK-CE032-S	FK-CE040-S	FK-CE050-S	FK-CE063-S	FK-CE080-S	FK-CE100-S
Type T; 2.5 bar	FK-CE016-T	FK-CE025-T	FK-CE032-T	FK-CE040-T	FK-CE050-T	FK-CE063-T	FK-CE080-T	FK-CE100-T
Type U; 4.0 bar	FK-CE016-U	FK-CE025-U	FK-CE032-U	FK-CE040-U	FK-CE050-U	FK-CE063-U	FK-CE080-U	FK-CE100-U
Seal kits FPM NBR	 SK-CBE160V SK-CBE160	 SK-CBE250V SK-CBE250	 SK-CBE320V SK-CBE320	 SK-CBE400V SK-CBE400	 SK-CBE500V SK-CBE500	 SK-CBE630V SK-CBE630	 SK-CBE800V SK-CBE800	 SK-CBE1000V SK-CBE1000
Bolt kits (ISO 4762-12.9)	BK414 4x M8x40	BK391 4x M12x50	BK415 4x M16x55	BK416 4x M20x70	BK417 4x M20x75	BK418 4x M30x100	BK419 8x M24x120	BK509 8x M30x130
Recommended torque [Nm]	31.8	108	264	517	517	1775	890	1775

Ordering code example:

FK-CE016-U ⇒ 10 pcs., spring for NG16, type U

[1] 1 spring kit contains 10 springs.

Diagram to choose the orifice Ø

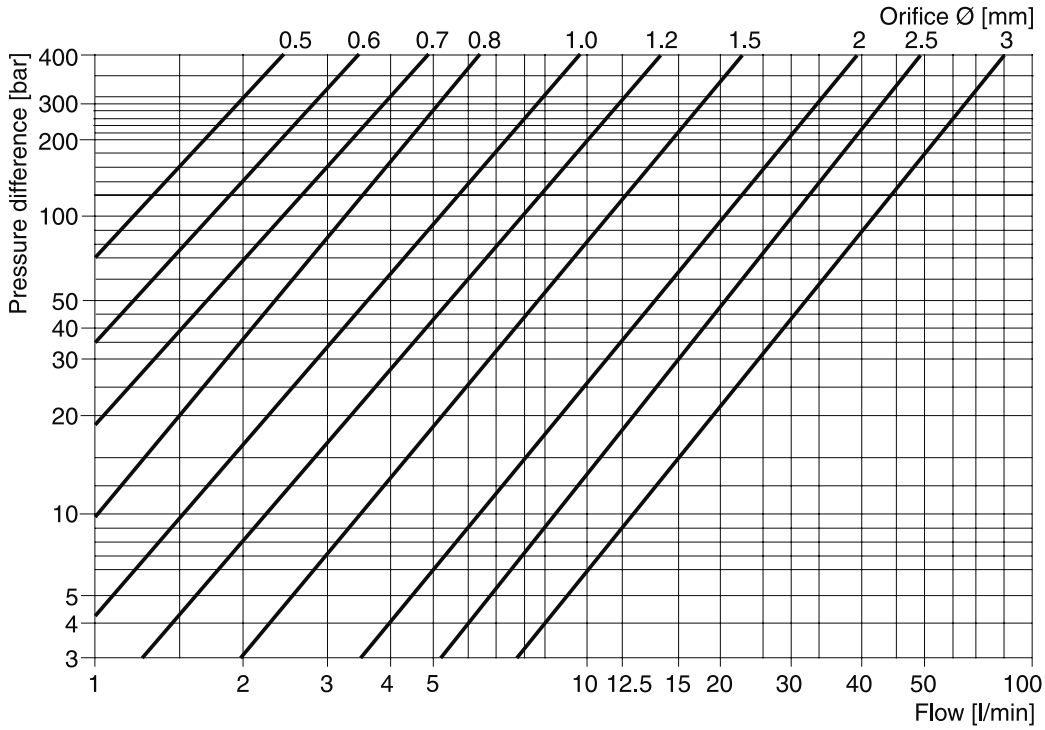

Values measured at a viscosity of 40 cST and a temperature of 50 °C.

Orifices

There are different orifices available to realize different opening / closing velocities.
The control volume of each nominal valve size can be found at the CE series.

8

Orifice kits, sorted by thread with different diameters

Orifice kit	Orifice kit, sorted by thread with different diameters, consisting of 2 pieces of each marked diameter												
Ø	0.0	0.8	0.9	1.0	1.1	1.2	1.3	1.5	1.8	2.0	2.2	2.5	3.0
DK-M4	•	•	•	•	•	•	•	•	–	•	–	–	–
DK-M5	•	•	•	•	•	•	•	•	–	•	–	–	–
DK-M6	•	•	•	•	•	•	•	•	–	•	–	–	–
DK-M8	•	–	–	•	–	•	–	•	•	•	•	•	–
DK-M10x1	•	–	–	•	–	•	–	•	•	•	–	•	•
DK-1/16NPT	•	•	•	•	•	•	•	•	–	•	–	–	–
DK-1/8NPT	•	–	–	•	–	•	–	•	•	•	–	•	•

Orifice kits, thread with one defined diameter 20 pcs per box

Orifice kits of one size:
Ordering Code Examples

DK-M4-08 ⇒ 20 pcs, orifice size 0.8 mm

DK-M5-10 ⇒ 20 pcs, orifice size 1.0 mm

DK-M8-12 ⇒ 20 pcs, orifice size 1.2 mm

Orifice gauge: Order no. DK-05-30

Removal CE016 to CE063

The extracting tools consist of tee bar, slide hammer, support handle, and expanding collet (fig. 1).

At first the spacer ring is removed. Next, spring and poppet are withdrawn. Finally, the expanding collet is inserted into the sleeve and braced by means of the tee bar. Using the slide hammer, collet and sleeve are extracted from the cavity.

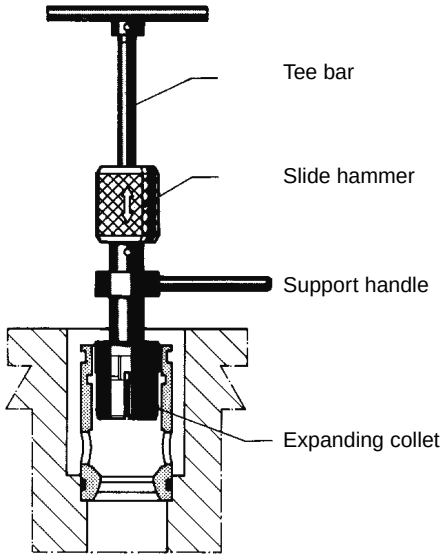

Figure 1

Ordering code

Valve size	Order no.:
CE016 *	090 4600 09779
CE025 *	090 4600 09780
CE032 *	090 4600 09781
CE040 *	090 4600 09782
CE050 *	090 4600 09783
CE063 *	090 4600 09784
CE016 to CE063 *	090 4600 09785

8

Removal CE080 to CE100

The extracting tools consist of spacer ring puller (fig. 4), puller (fig. 3), and puller thrust plate. At first the spacer ring is removed. Next the puller is inserted into the sleeve and aligned by the puller thrust plate. Tightening the nut then extracts the sleeve from the cavity.

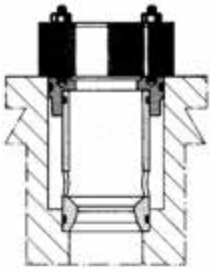

Figure 2

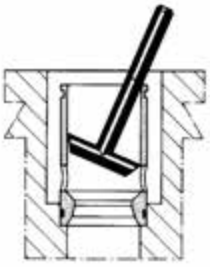

Figure 3

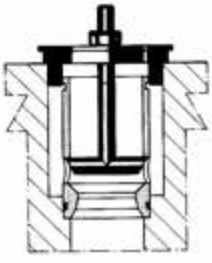

Figure 4

Ordering Code

Valve size	Order no.:
CE080	090 4600 10628
CE100	090 4600 10629

* CE/CP respectively

The pressure relief valve series R consists of a manual adjustment pilot stage and a cartridge main stage.

The pressure relief valve series RS consists of a manual adjusted pilot stage with a directional valve for an electrically controlled vent function and a cartridge main part.

The R/RS*E model codes embrace the pilot valves, covers and cartridges that are also offered as separate items. See combination examples for details.

RS*E

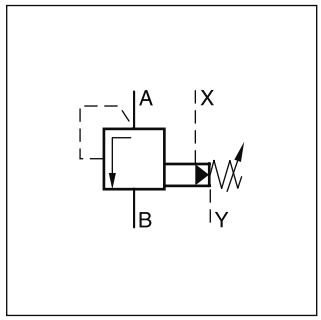

R*E

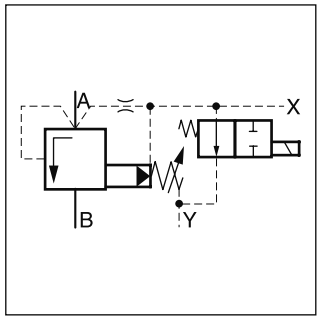

RS*E (simplified symbol)

Features

- Pilot operated with manual adjustment
- Cavity and mounting pattern according to ISO 7368
- 6 pressure stages
- 2 switching types (series RS*E)
- 2 adjustment modes
  - Hand knob
  - Cylinder lock
- Remote control via port X
- 6 sizes, NG16 to NG63

Note

Port X only usable for remote vent function

R25E

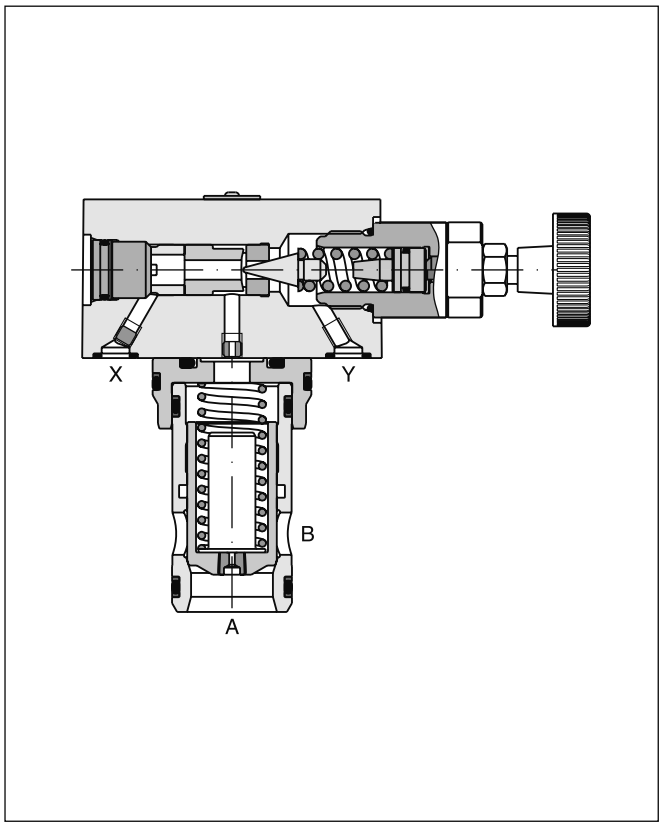

RS25E

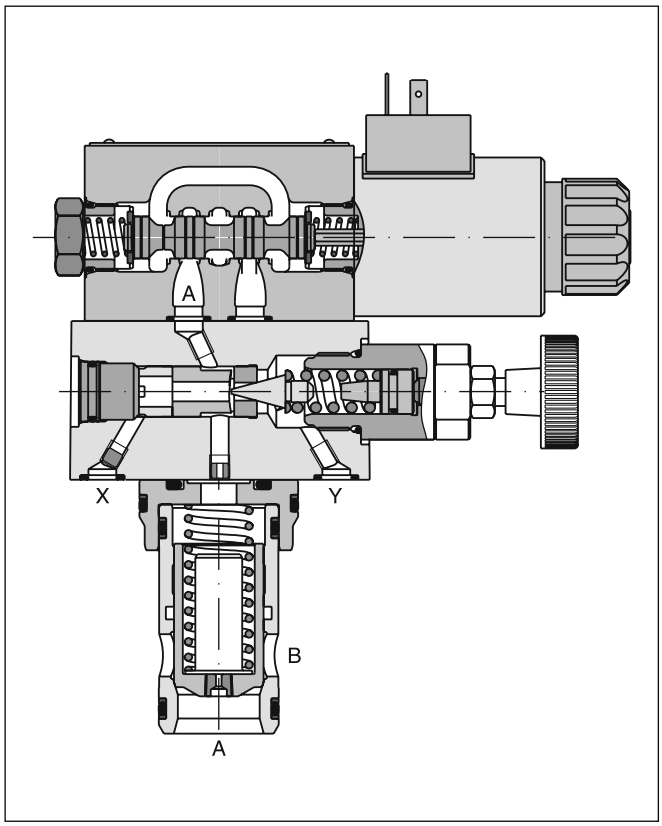

R*E

R		E			1	S			
Pressure relief valve	**Nominal size**	**Slip-in mounting ISO 7368**	**Pressure stages**	**Adjust-ment**	**Pilot oil** (pilot internal, drain external)	**Poppet spring**	**Seal**	**Design series** (not required for ordering)	**Spool type**

Code	Nominal size
16	NG16
25	NG25
32	NG32
40	NG40
50	NG50
63	NG63

Code	Pressure stages
07	up to 70 bar
10	up to 105 bar
17	up to 175 bar
21	up to 210 bar
25	up to 250 bar
35	up to 350 bar

Code	Spool type
omit	Standard
S07	with poppet seals

Code	Seal
N	NBR
V	FPM

Code	Adjustment
S	Hand knob (standard)
A	Acorn nut with lead seal
L	Cylinder lock

RS*E

RS		E			1	S				W			
Pressure relief valve with elec. un-loading	**Nominal size**	**Slip-in mounting ISO 7368**	**Pressure stages**	**Adjust-ment**	**Pilot oil** (pilot int., drain ext.)	**Poppet spring**	**Seal**	**Switching type**	**Solenoid**	**Without plug**	**Options**	**Design series** (not required for ordering)	**Spool type**

Code	Nominal size
16	NG16
25	NG25
32	NG32
40	NG40
50	NG50
63	NG63

Code	Pressure stages
07	up to 70 bar
10	up to 105 bar
17	up to 175 bar
21	up to 210 bar
25	up to 250 bar
35	up to 350 bar

Code	Adjustment
S	Hand knob (standard)
A	Acorn nut with lead seal
L	Cylinder lock

Code	Spool type
omit	Standard
S07	with poppet seals

Code	Options
omit	Standard
S	with slow unloading

Code	Solenoid
K	12 V
J	24 V
U [1)]	98 V
G [1)]	205 V

Code	Switching type
1	Solenoid not activated, unpress. circulation
9	Solenoid activated, unpress. circulation

Code	Seal
N	NBR
V	FPM

[1)] To be used in combination with rectifier plugs at 120 VAC / 230 VAC power supply.

8

R-RS_E UK.INDD CM 16.02.15

R*E

General							
Nominal size		**NG16**	**NG25**	**NG32**	**NG40**	**NG50**	**NG63**
Interface		Slip-in mounting acc. ISO 7368					
Mounting position		as desired, horizontal mounting preferred					
Ambient temperature	[°C]	-20...+60					
$MTTF_D$ value	[years]	75					
Weight	[kg]	2.2	3.5	4.9	8.0	13.7	22.8
Hydraulic							
Max. operating pressure	[bar]	Ports A and X up to 350, Ports B and Y 30					
Pressure stages	[bar]	75, 105, 175, 210, 250, 350					
Nominal flow	[l/min]	220	500	950	1400	2300	4000
Fluid		Hydraulic oil according to DIN 51524					
Fluid temperature	[°C]	-20...+70 (NBR: -25...+70)					
Viscosity, permitted	[cSt] / [mm²/s]	20...400					
recommended	[cSt] / [mm²/s]	30...80					
Filtration		ISO 4406 (1999); 18/16/13					

RS*E

General							
Nominal size		**NG16**	**NG25**	**NG32**	**NG40**	**NG50**	**NG63**
Interface		Slip-in mounting acc. ISO 7368					
Mounting position		as desired, horizontal mounting preferred					
Ambient temperature	[°C]	-20...+60					
$MTTF_D$ value	[years]	75					
Weight	[kg]	2.7	5.2	6.4	9.5	15.2	24.3
Hydraulic							
Max. operating pressure	[bar]	Ports A and X 350, ports B and Y 30					
Pressure stages	[bar]	75, 105, 175, 210, 250, 350					
Nominal flow	[l/min]	220	500	950	1400	2300	4000
Fluid		Hydraulic oil according to DIN 51524					
Fluid temperature	[°C]	-20...+70 (NBR: -25...+70)					
Viscosity, permitted	[cSt] / [mm²/s]	20...400					
recommended	[cSt] / [mm²/s]	30...80					
Filtration		ISO 4406 (1999); 18/16/13					
Electrical (solenoid)							
Duty ratio		100 % ED; CAUTION: coil temperature up to 150 °C possible					
Protection class		IP65 in accordance with EN 60529 (with correctly mounted plug-in connector)					
	Code	K	J	U	G		
Supply voltage	[V]	12 V =	24 V =	98 V =	205 V =		
Tolerance supply voltage	[%]	±10	±10	±10	±10		
Current consumption	[A]	2.72	1.29	0.33	0.13		
Power consumption	[W]	32.7	31	31.9	28.2		
Solenoid connection		Connector as per EN175301-803, solenoid identification as per ISO 9461					
Wiring min.	[mm²]	3 x 1.5 recommended					
Wiring length max.	[m]	50 recommended					

p/Q performance curve [1)]

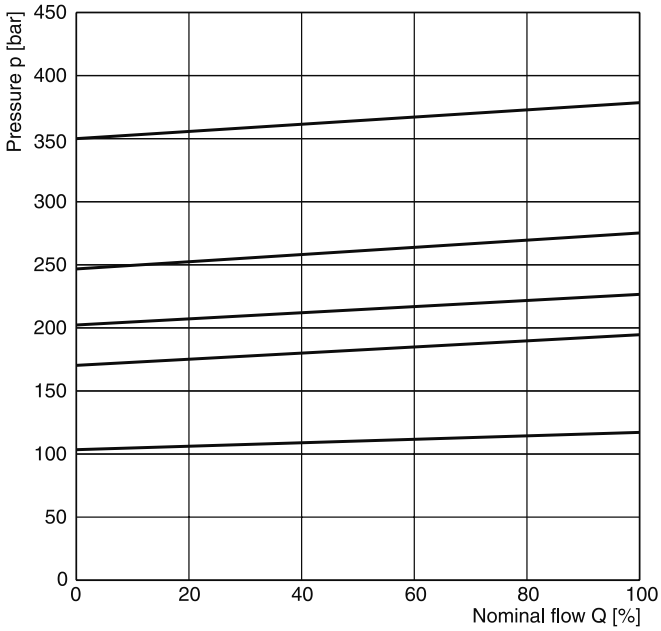

Minimum pressure curve

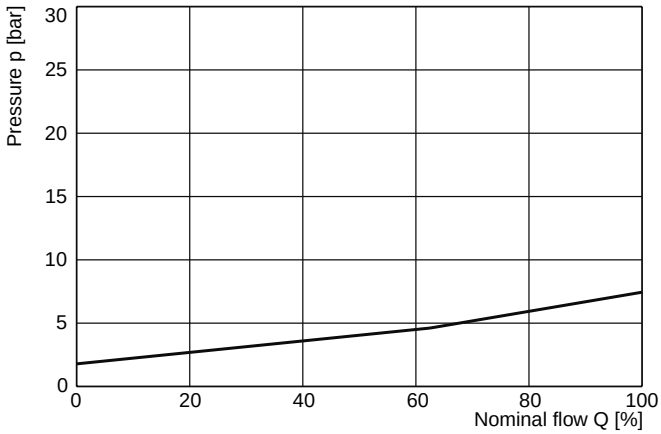

All characteristic curves measured with HLP46 at 50 °C.

8

[1)] The performance curves are measured with external drain.
For internal drain the tank pressure has to be added to curve.

Dimensions R*E

NG16 - NG32

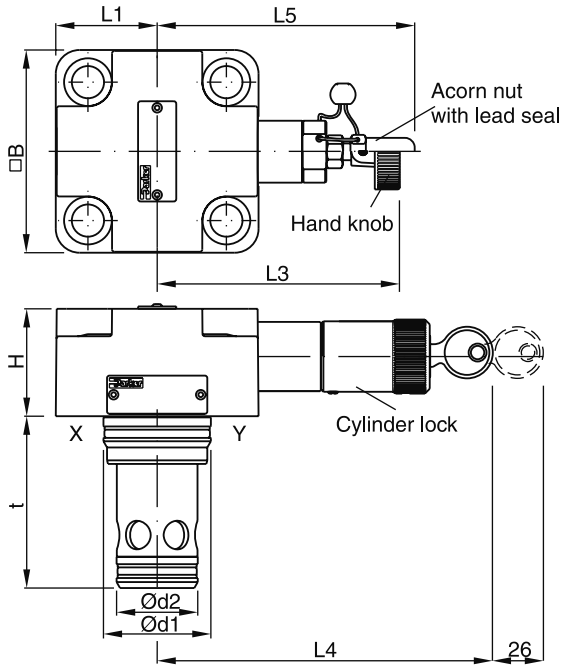

NG40 - NG63 [1]

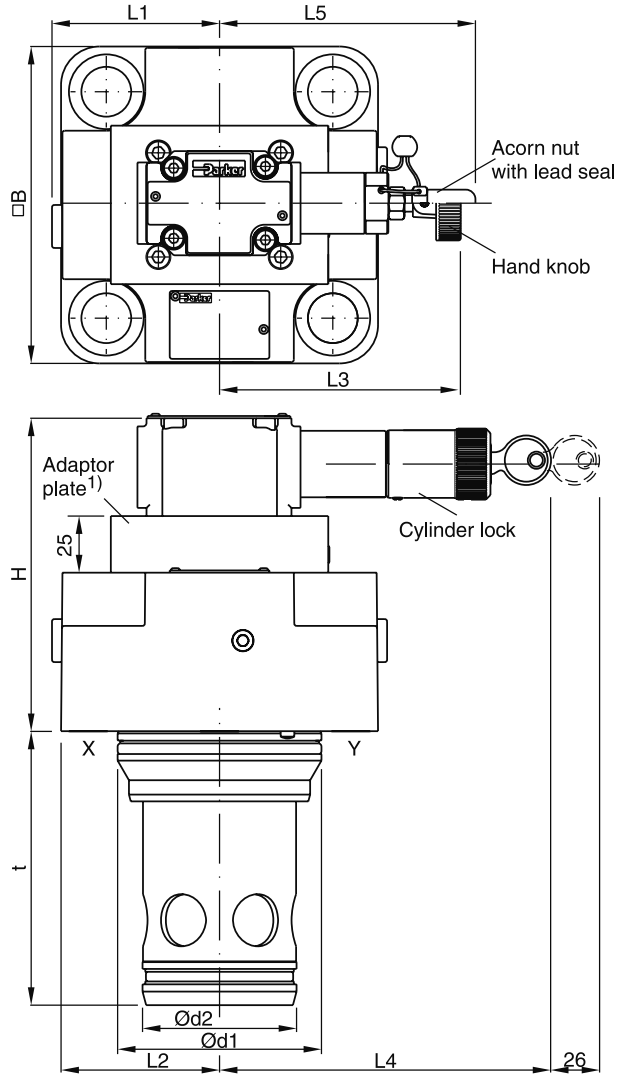

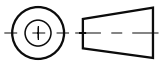

Size	H	B	L1	L2	L3	L4	L5	d1	d2	t
NG16	40	65 [2]	32.5	–	114	125.5	117	32	25	56
NG25	47	85	42.5	–	102	114	105	45	34	71
NG32	50	102	51	–	95	106	97.5	60	45	85
NG40	106	125	62.5	66.5	106	144	110.5	75	55	105
NG50	141	140	70	74	106	144	110.5	90	68	121
NG63	155	180	90	94	106	144	110.5	120	90	155

NG	Kit	ISO 4762-12.9	[Nm]	Kit NBR	Kit FPM
16	BK414	4 x M8x40	31.8	SK-R16EN	SK-R16EV
25	BK391	4 x M12x50	108	SK-R25EN	SK-R25EV
32	BK415	4 x M16x55	264	SK-R32EN	SK-R32EV
40	BK416	4 x M20x70	517	SK-R40EN	SK-R40EV
50	BK417	4 x M20x75	517	SK-R50EN	SK-R50EV
63	BK418	4 x M30x100	1775	SK-R63EN	SK-R63EV

[1] NG40 without adaptor plate.
[2] Width 79 mm.

R-RS_E UK.INDD CM 16.02.15

Dimensions RS*E

NG16 - NG32

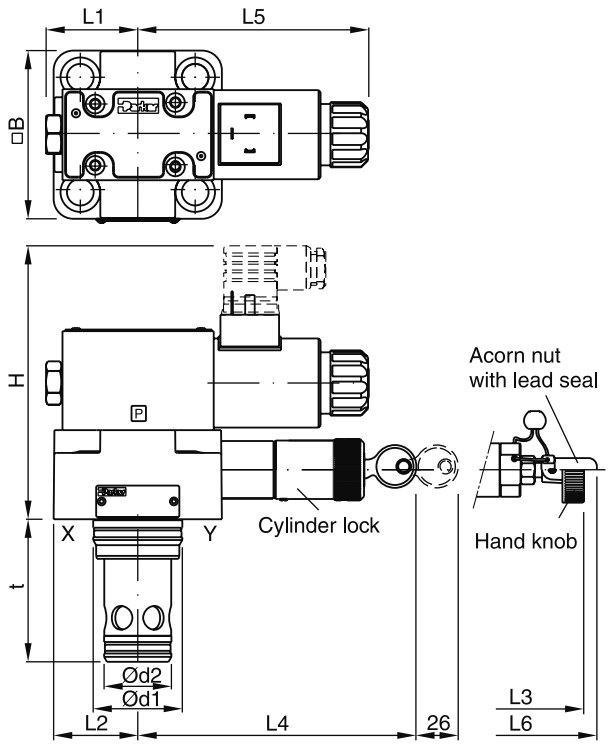

NG40 - NG63 [1]

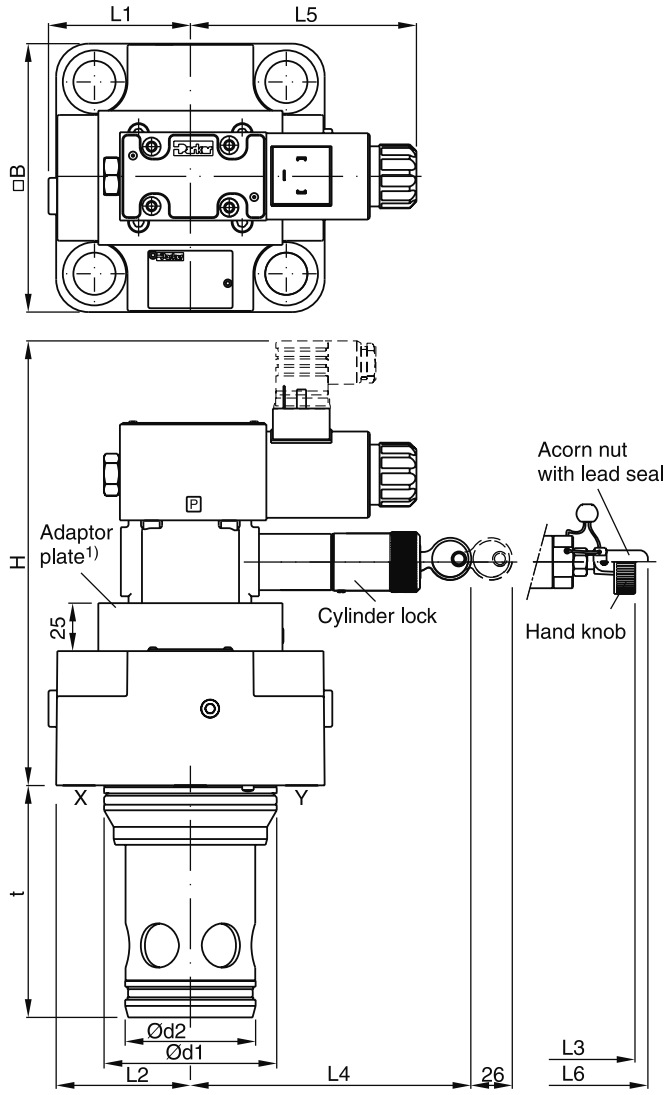

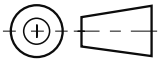

Size	H	B	L1	L2	L3	L4	L5	L6	d1	d2	t
NG16	133	65 [2]	32.5	–	114	125.5	117	117	32	25	56
NG25	137	85	42.5	–	102	114	117	105	45	34	71
NG32	143	102	51	–	95	106	117	97.5	60	45	85
NG40	196	125	62.5	66.5	106	144	117	110.5	75	55	105
NG50	231	140	70	74	106	144	117	110.5	90	68	121
NG63	246	180	90	94	106	144	117	110.5	120	90	155

NG	Kit	ISO 4762-12.9	[Nm]	Kit NBR	Kit FPM
16	BK414	4 x M8x40	31.8	SK-RS16EN	SK-RS16EV
25	BK391	4 x M12x50	108	SK-RS25EN	SK-RS25EV
32	BK415	4 x M16x55	264	SK-RS32EN	SK-RS32EV
40	BK416	4 x M20x70	517	SK-RS40EN	SK-RS40EV
50	BK417	4 x M20x75	517	SK-RS50EN	SK-RS50EV
63	BK418	4 x M30x100	1775	SK-RS63EN	SK-RS63EV

[1] NG40 without adaptor plate.
[2] Width 79 mm.

R-RS_E UK.INDD CM 16.02.15

The pilot operated pressure relief valves series DSDU limit the system pressure by opening the pressure port to tank. They are mostly used for accumulator pressure relief. The valve is set and sealed by the German technical monitoring association TÜV. The valve delivery includes a copy of the TÜV certificate of conformity.

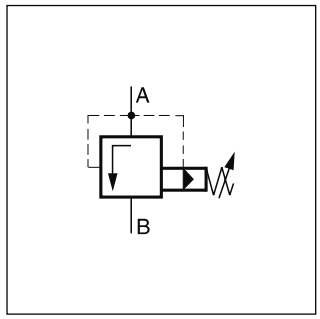

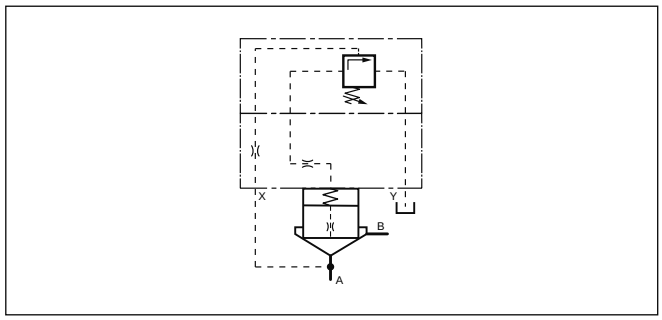

Detailed symbol

Features

- TÜV certificate
- CE certification (module G) according to directive 97/23/EC
- Installation cavity and mounting pattern according to ISO 7368
- 3 sizes, NG16 to NG32
- Remote control via port X

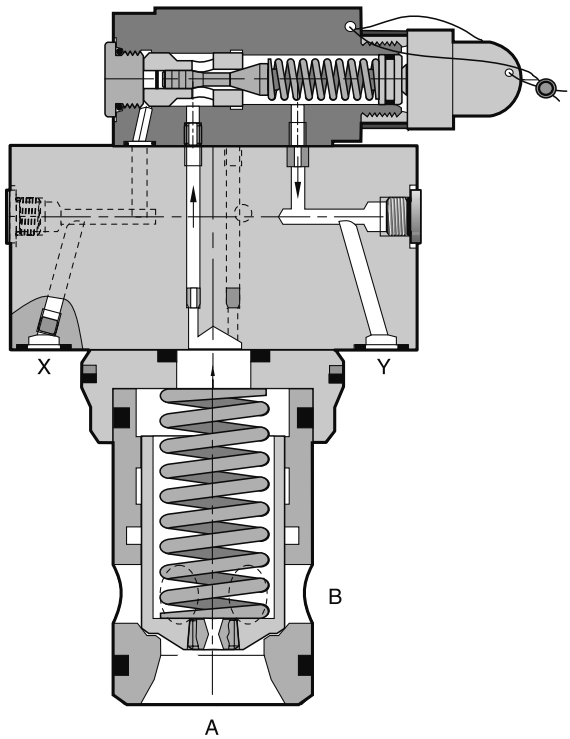

Ordering code

[ ]	DSDU	[ ]	[ ]	TÜV	[ ]
Seals	**Pressure relief valve**	**Type code**	**Pressure stage**		**Desired opening pressure in bar (please specify)**

Code	Seals
omit	NBR
V	FPM

Type Code			Pressure stage	Opening pressure ranges [bar]
1078 E16	1078 E25	1078 E32		
Q_{max} [l/min] depending on opening pressure				
150	215	500	B	50 - 75
165 190	235 280	550 640	E	76 - 125 126 - 175
215 230	310 355	750 800	G	176 - 200 201 - 250
255 280	390 400	900 950	K	251 - 300 301 - 350

Ordering examples

DSDU 1078 E32E - 120 bar matches Q_{max} 550 l/min, opening pressure 120 bar

DSDU 1078 E32E - 150 bar matches Q_{max} 640 l/min, opening pressure 150 bar

Technical data

General				
Size		**NG16**	**NG25**	**NG32**
Interface		Slip-in mounting according to ISO 7368		
Mounting position		as desired, horizontal mounting preferred		
Ambient temperature	[°C]	-20...+60		
$MTTF_D$ value	[years]	150		
Weight	[kg]	2.2	3.5	4.9
Hydraulic				
Max. operating pressure	[bar]	Ports A and X 350, B and Y depressurized		
Pilot oil		External / external		
Adjustment pressure	[bar]	See ordering code		
Nominal flow	[l/min]	See ordering code		
Fluid		Hydraulic oil according to DIN 51524		
Fluid temperature	[°C]	-20...+70 (NBR: -25...+70)		
Viscosity, permitted	[cSt] / [mm²/s]	20...400		
recommended	[cSt] / [mm²/s]	30...80		
Filtration		ISO 4406 (1999); 18/16/13		

p/Q curve

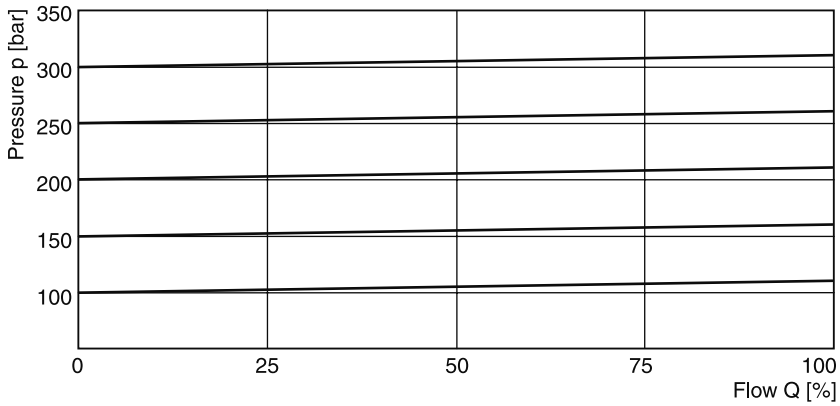

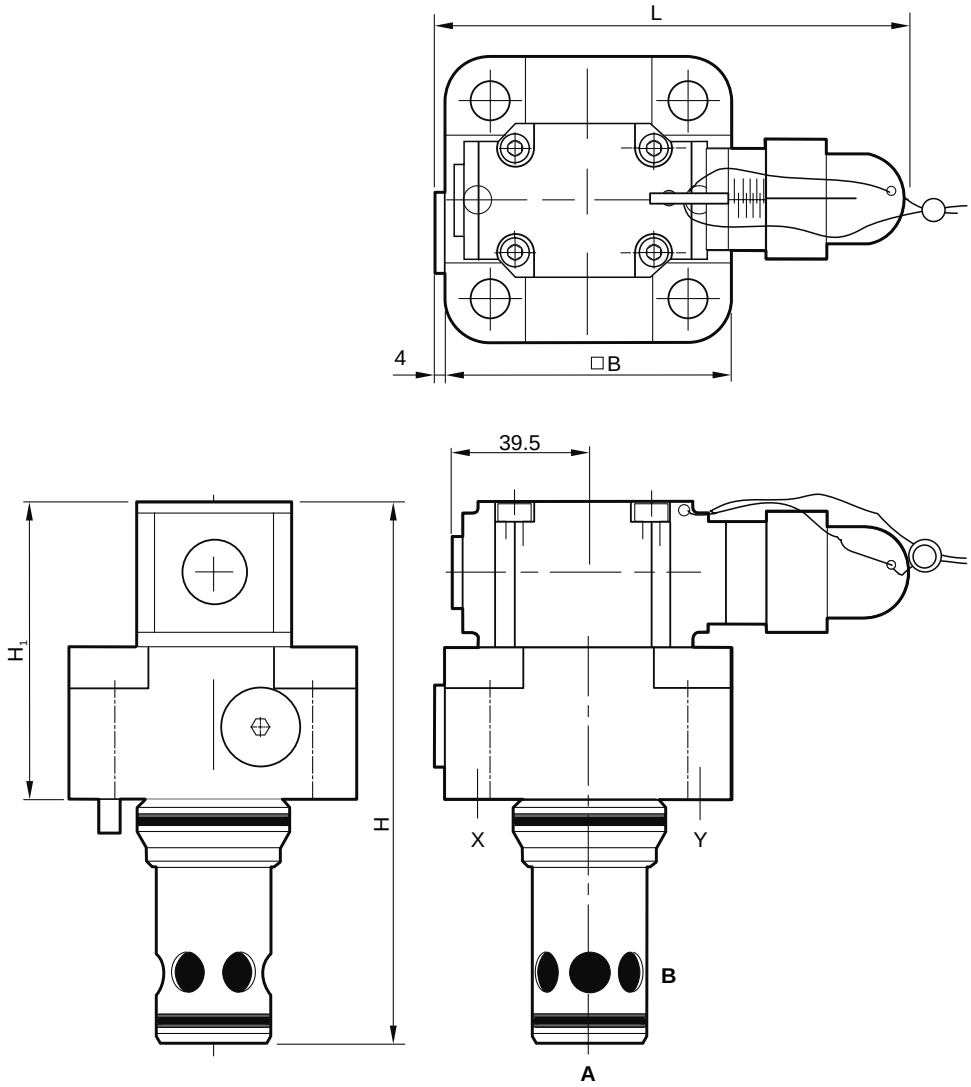

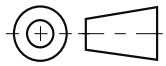

NG	H	H_1	B	L
16	140	84	79 *	142
25	160	88	85	135
32	178	93	102	143

NG	Kit	ISO 4762-12.9	[Nm]	Kit NBR	Kit FPM
16	BK414	4 x M8x40	31.8	SK-DSDU10-E16	SK-DSDU10-E16V
25	BK391	4 x M12x50	108	SK-DSDU10-E25	SK-DSDU10-E25V
32	BK415	4 x M16x55	264	SK-DSDU10-E32	SK-DSDU10-E32V

* Width 65 mm.

The proportional pressure relief valve series RE*E*W consists of a proportional pilot stage and a slip-in cartridge main stage. A mechanical maximum pressure stage is optionally available. For sizes NG25 and NG32 a screw-in cartridge is used, for sizes NG40, NG50 and NG63 an additional sandwich unit.

The RE*W model code embraces the pilot valves, covers and cartridges that are also offered as separate items. See combination examples for details.

In combination with the digital power amplifier PC-D00A-400 the valve parameters can be saved, changed and duplicated.

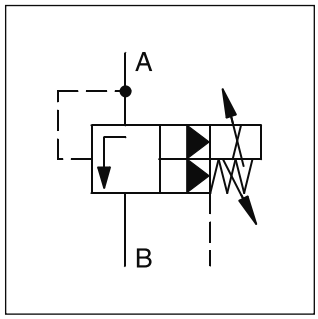

Features

- Pilot operated with proportional solenoid
- Continuous adjustment by proportional solenoid
- Optional mechanical max. pressure stage
- Cavity and mounting pattern according to ISO 7368
- 4 pressure stages
- 6 sizes, NG16 to NG63

Note

Port X only usable for remote vent function

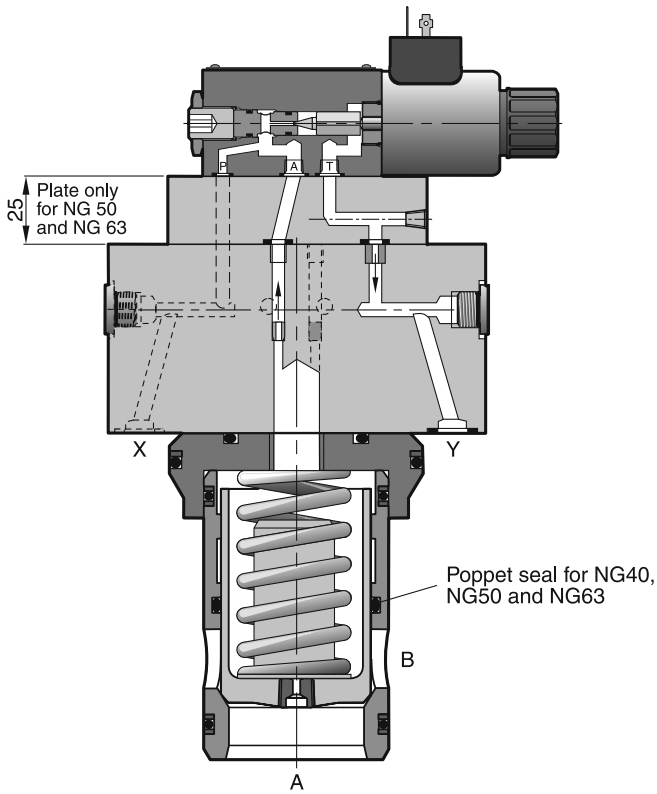

8

Ordering code

RE		E		W	1	S		1		W			
Prop. pressure relief valve	**Nominal size**	**Slip-in mounting ISO 7368**	**Pressure stages**	**Off-board electronics**	**Pilot oil** (pilot int., drain ext.)	**Poppet spring**	**Seal**	**Normally open**	**Solenoid**	**Without plug**	**Options**	**Design series**	**Spool type**

Code	Nominal size
16	NG16
25	NG25
32	NG32
40 [1)]	NG40
50 [1)]	NG50
63 [1)]	NG63

Code	Pressure stages
10	up to 105 bar
17	up to 175 bar
25	up to 250 bar
35	up to 350 bar

Code	Spool type
omit	Standard
S07	with poppet seals

Code	Options
omit	Standard
M	Mech. max. adjustment

Code	Solenoid
K	12 V, 2.1 A
X	16 V, 1.3 A

Code	Seal
N	NBR
V	FPM

[1)] With poppet seal.

8

Technical data

General							
Nominal size		**NG16**	**NG25**	**NG32**	**NG40**	**NG50**	**NG63**
Interface		Slip-in mounting acc. ISO 7368					
Mounting position		as desired, horizontal mounting preferred					
Ambient temperature	[°C]	-20...+60					
$MTTF_D$ value	[years]	75					
Weight	[kg]	2.7	5.2	6.4	9.5	15.2	24.3
Hydraulic							
Max. operating pressure	[bar]	Ports A and X 350, ports B and Y 30					
Pressure stages	[bar]	105, 175, 250, 350					
Nominal flow	[l/min]	220	500	950	1400	2300	4000
Fluid		Hydraulic oil according to DIN 51524					
Fluid temperature	[°C]	-20...+70 (NBR: -25...+70)					
Viscosity, permitted	[cSt] / [mm²/s]	20...400					
recommended	[cSt] / [mm²/s]	30...80					
Filtration		ISO 4406 (1999); 18/16/13					
Electrical (proportional solenoid)							
Duty ratio		100 % ED; CAUTION: coil temperature up to 150 °C possible					
Protection class		IP65 in accordance with EN 60529 (with correctly mounted plug-in connector)					
Code		K			X		
Supply voltage	[V]	12 V =			16 V =		
Max. current	[A]	2.1			1.3		
Coil resistance at 20 °C	[Ohm]	4.28			12		
Solenoid connection		Connector as per EN 175301-803					
Power amplifier, recommended		PCD00A-400					

RE_E_W UK.INDD CM 16.04.15

Signal/pressure curve

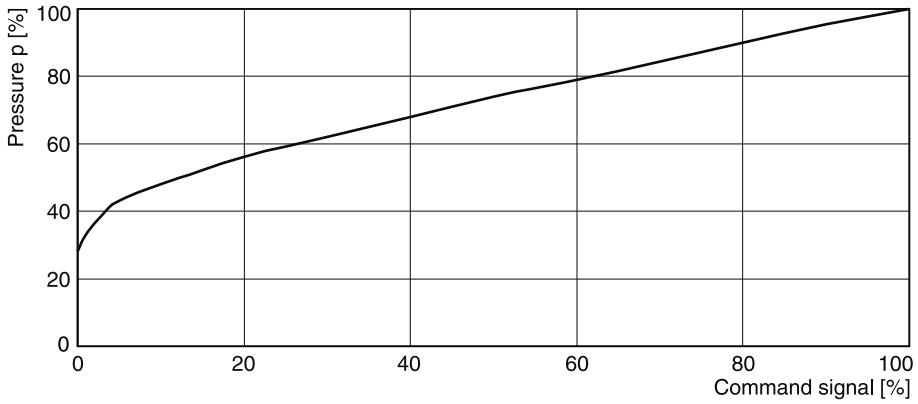

p/Q performance curve

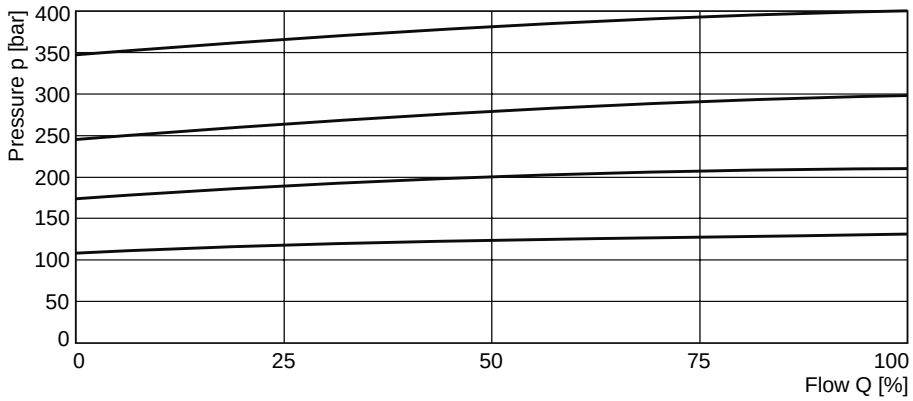

Minimum pressure curve

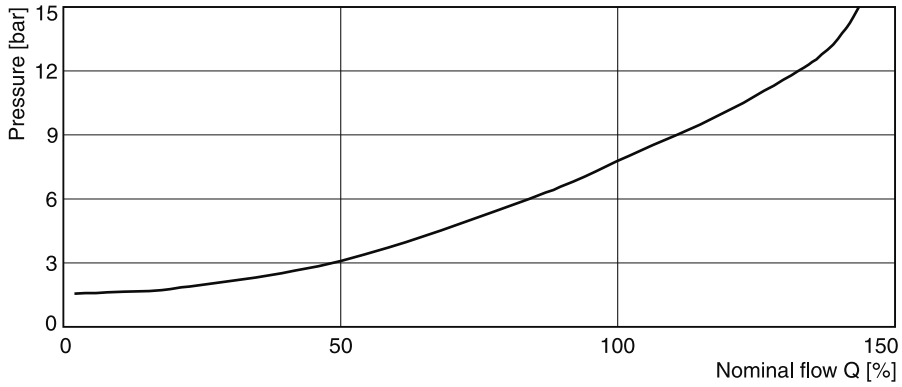

All characteristic curves measured with HLP46 at 50 °C.

The performance curves are measured with external drain. For internal drain the tank pressure has to be added to curve.

RE_E_W UK.INDD CM 16.04.15

NG16 - NG32

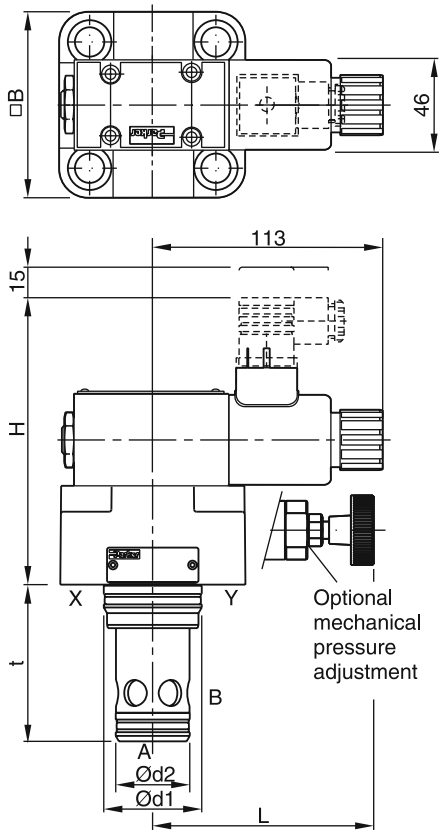

NG40 - NG63 *)

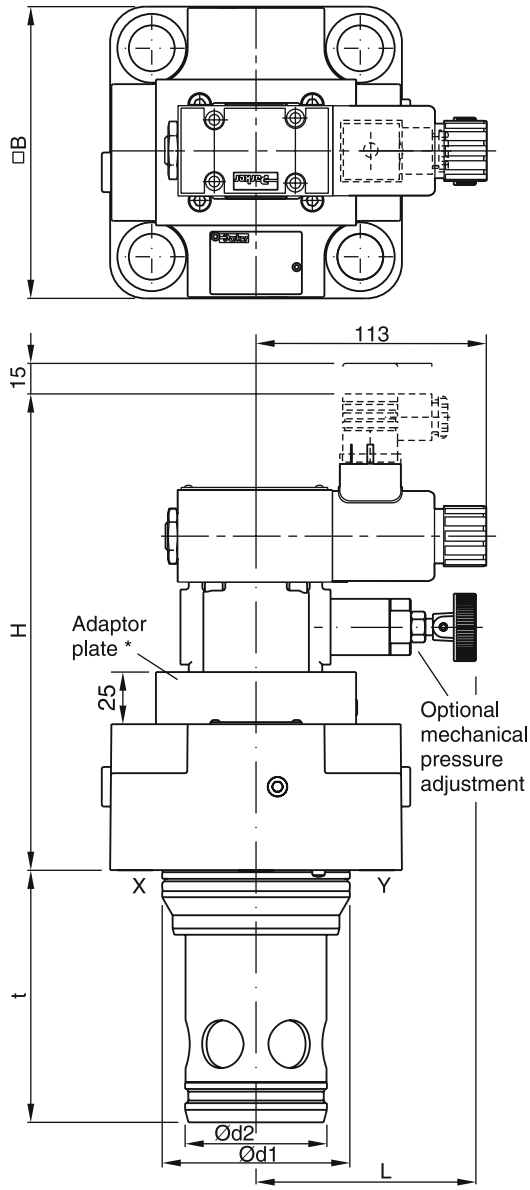

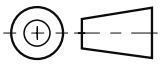

NG	H	B	d_1	d_2	t	L
16	135	79 1)	32	25	56	114
25	140	85	45	34	72	102
32	145	102	60	45	85	95
40	137 (180.2) 2)	125	75	55	105	106
50	172 (215.2) 2)	140	90	68	122	106
63	187 (230.2) 2)	180	120	90	155	106

NG	Kit	ISO 4762-12.9	[Nm]	Kit NBR	Kit FPM
16	BK414	4 x M8x40	31.8	SK-RE16EN	SK-RE16EV
25	BK391	4 x M12x50	108	SK-RE25EN	SK-RE25EV
32	BK415	4 x M16x55	264	SK-RE32EN	SK-RE32EV
40	BK416	4 x M20x70	517	SK-RE40EN	SK-RE40EV
50	BK417	4 x M20x75	517	SK-RE50EN	SK-RE50EV
63	BK418	4 x M30x100	1775	SK-RE63EN	SK-RE63EV

* NG40 without adaptor plate.
1) Width 65 mm.
2) With mechanical pressure adjustment.

RE_E_W UK.INDD CM 16.04.15

The proportional pressure relief valves series RE*E*T with onboard electronics and a slip-in cartridge main stage is electronically based on the functionality of the digital amplifier PCD00.

The digital onboard electronics is situated in a robust metal housing and can be used in rough environments.

The nominal values of the valves are factory set. Additionally the ProPxD software permits the editing of all parameters. The software is also used for the digital electronic modules. The cable for connection to a serial RS232C interface is available as accessory.

The valves are optionally available with a mechanical maximum pressure adjustment.

The RE*E*T model code embraces the pilot valves, covers and cartridges that are also offered as separate items.

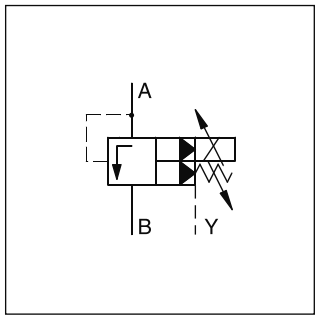

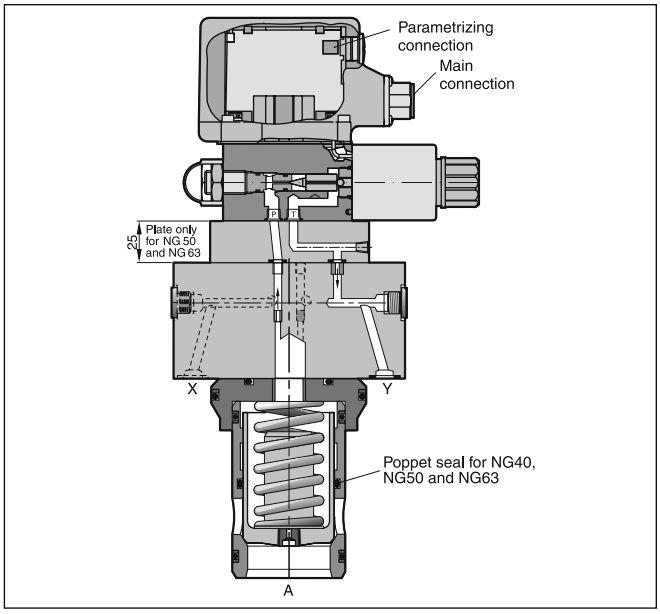

Features

- Pilot operated pressure relief valve
- Onboard electronics
- Optional mechanical max. pressure stage
- Factory setting
- Ramp time adjustment
- Linearized characteristics
- 4 pressure stages
- Cavity and mounting pattern according to ISO 7368
- 6 sizes, NG16 to NG63

Note

Port X only usable for remote vent function.

8

Ordering code

RE		E		T	1	S		1		0			
Prop. pressure relief valve with elec. unloading	**Nominal size**	**Slip-in mounting ISO 7368**	**Pressure stages**	**Onboard electronics**	**Pilot oil** (pilot int., drain ext.)	**Poppet spring**	**Seal**	**Normally open**	**Command signal**	**Electr. attach-ments**	**Options**	**Design series** (not required for ordering)	**Spool type**

Code	Nominal size
16	NG16
25	NG25
32	NG32
40 [1]	NG40
50 [1]	NG50
63 [1]	NG63

Code	Pressure stages
10	up to 105 bar
17	up to 175 bar
25	up to 250 bar
35	up to 350 bar

Code	Spool type
omit	Standard
S07 [2]	with poppet seals

Code	Options
omit	Standard
M	Mechanical max. adjustment

Code	Command signal
F	Voltage input 0...+10 V with ref. output +10 V
R	Current input 4...20 mA

Code	Seal
N	NBR
V	FPM

[1] With poppet seal.
[2] Not for NG16.

Please order plugs separately, item no. 5004072
Parametrizing cable OBE -> RS-232: item no. 40982923

General							
Nominal size		**NG16**	**NG25**	**NG32**	**NG40**	**NG50**	**NG63**
Interface		Slip-in mounting acc. ISO 7368					
Mounting position		as desired, horizontal mounting preferred					
Ambient temperature	[°C]	-20...+60					
$MTTF_D$ value [1)]	[years]	75					
Weight	[kg]	2.7	5.2	6.4	9.5	15.2	24.3
Vibration strength	[g]	10 sinus 5...2000 Hz acc. to IEC 68-2-6 30 noise 20...2000 Hz acc. to IEC 68-2-36 15 shock acc. to IEC 68-2-27					
Hydraulic							
Max. operating pressure	[bar]	Ports A and X 350, ports B and Y 30					
Pressure stages	[bar]	105, 175, 250, 350					
Nominal flow	[l/min]	220	500	950	1400	2300	4000
Fluid		Hydraulic oil according to DIN 51524					
Fluid temperature	[°C]	-20...+70 (NBR: -25...+70)					
Viscosity, permitted	[cSt] / [mm²/s]	20...400					
Viscosity, recommended	[cSt] / [mm²/s]	30...80					
Filtration		ISO 4406 (1999); 18/16/13					
Electrical							
Duty ratio ED	[%]	100					
Supply voltage	VDC	18...30, ripple < 5 % eff., surge free					
Current consumption max.	[A]	2.0					
Pre-fusing	[A]	2.5 medium lag					
Potentiometer supply	[V]	+10 / ±5 % max. 10 mA					
Command signal, Code F voltage	[V]	0...+10, ripple < 0.01 % eff., surge free, Ri = 100 kOhm					
Command signal, Code R current	[mA]	4...20, ripple < 0.01 % eff., surge free, Ri = 200 Ohm < 3.6 mA = enable off, > 3.8 mA = enable on (acc. NAMUR NE43)					
Differential input voltage max.	[V]	30 for terminal D and E against PE (terminal G)					
	[V]	11 for terminal D and E against 0V (terminal B)					
Adjustment ranges, Min current	[%]	0...50					
Adjustment ranges, Max current	[%]	50...100					
Adjustment ranges, Ramp	[s]	0...32.5					
Interface		RS 232C, parametrizing connection 5-pole					
EMC		EN 61000-6-2, EN 61000-6-4					
Central connection		6 + PE acc. EN 175201-804					
Cable specification	[mm²]	7 x 1.0 overall braid shield					
Cable length max.	[m]	50					

8

[1)] If valves with onboard electronics are used in safety-related parts of control systems, in case the safety function is requested, the valve electronics voltage supply is to be switched off by a suitable switching element with sufficient reliability.

Command pressure curve RE*E*T

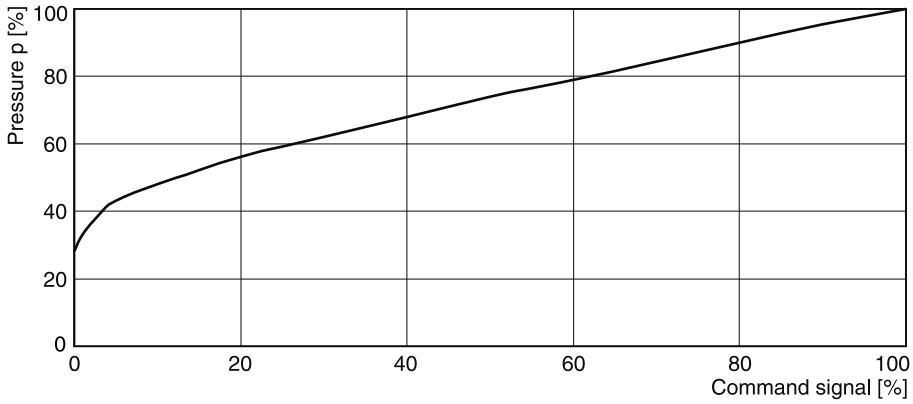

p/Q performance curve RE*E*T

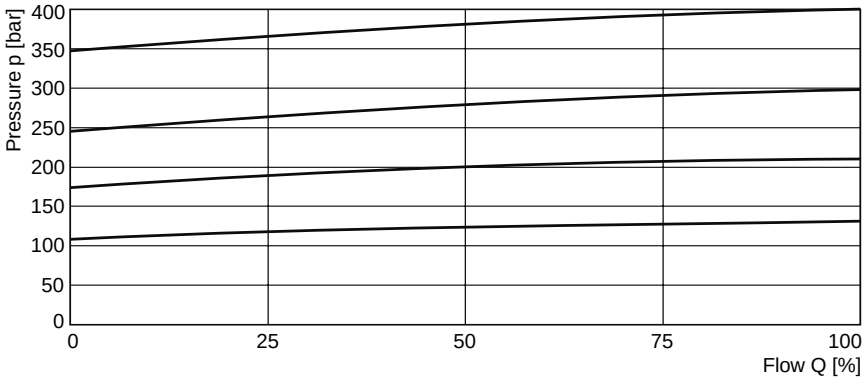

Minimum pressure curve RE*E*T

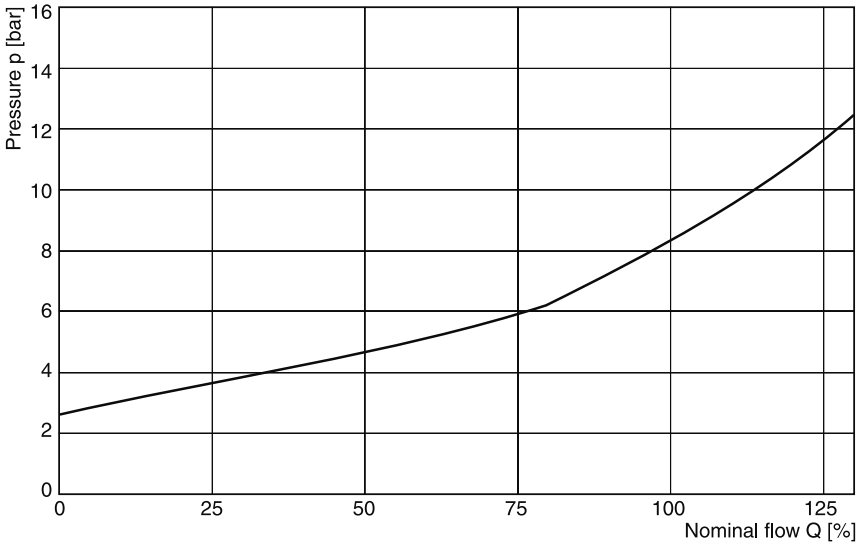

All characteristic curves measured with HLP46 at 50 °C.

The performance curves are measured with external drain. For internal drain the tank pressure has to be added to curve.

Block diagram

Code F
6 + PE acc. EN 175201-804

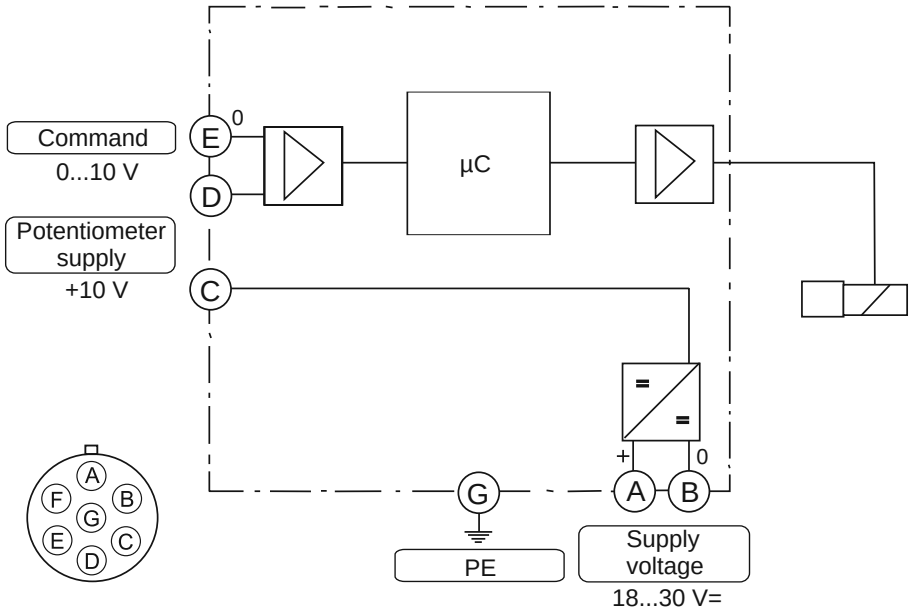

Code R
6 + PE acc. EN 175201-804

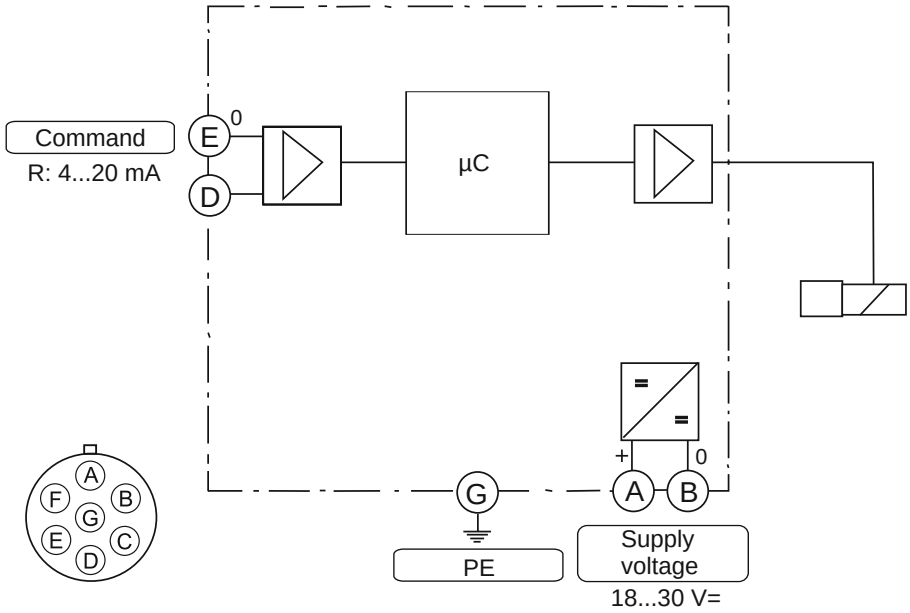

Female connector (EMC conform)

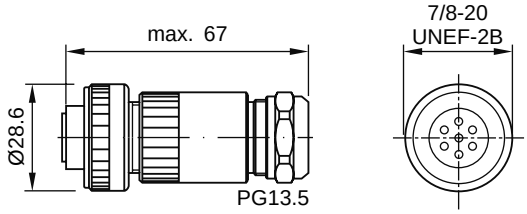

Please order plugs separately,
ID no. 5004072

ProPxD interface program

The ProPxD software permits comfortable parameter setting for the module electronics. Via the clearly arranged entry mask the parameters can be noticed and modified. Storage of complete parameter sets is possible as well as printout or record as a text file for further documentation. Stored parameter sets may be loaded anytime and transmitted to other valves. Inside the electronics a non-volatile memory stores the data with the option for recalling or modification.

The PC software can be downloaded free of charge at www.parker.com/euro_hcd – see page “Support“ or directly at www.parker.com/propxd.

Features

- Comfortable editing of all parameters
- Depiction and documentation of parameter sets
- Storage and loading of optimized parameter adjustments
- Executable with all actual Windows® operating systems from Windows® XP upwards
- Plain communication between PC and electronics via serial interface RS232C

The parametrizing cable may be ordered under item no. 40982923.

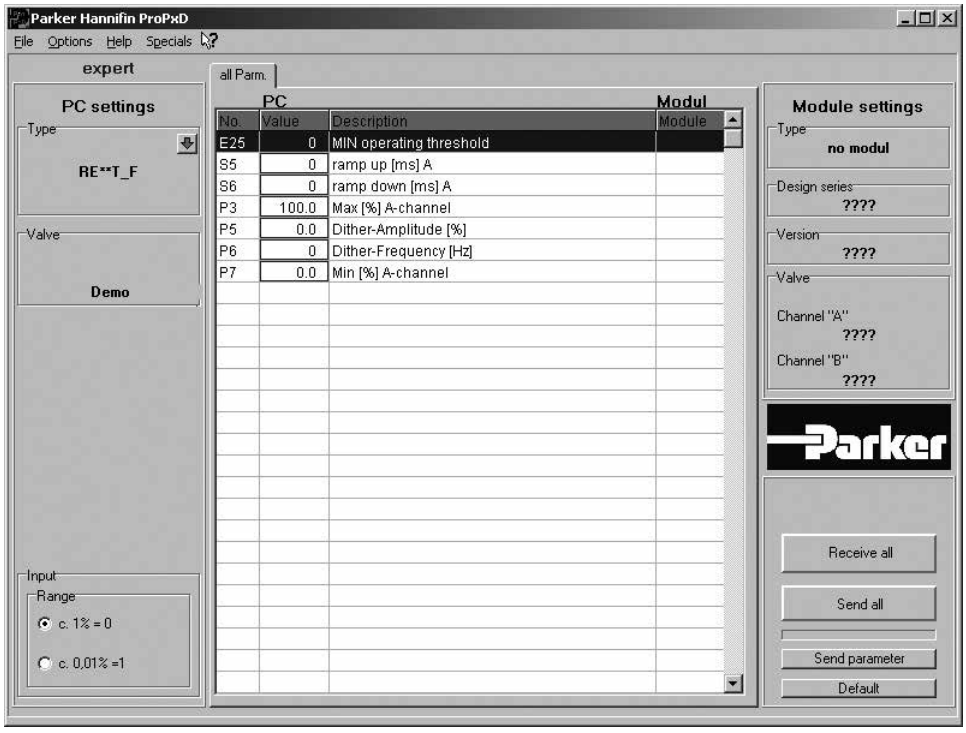

8

NG16 - NG32

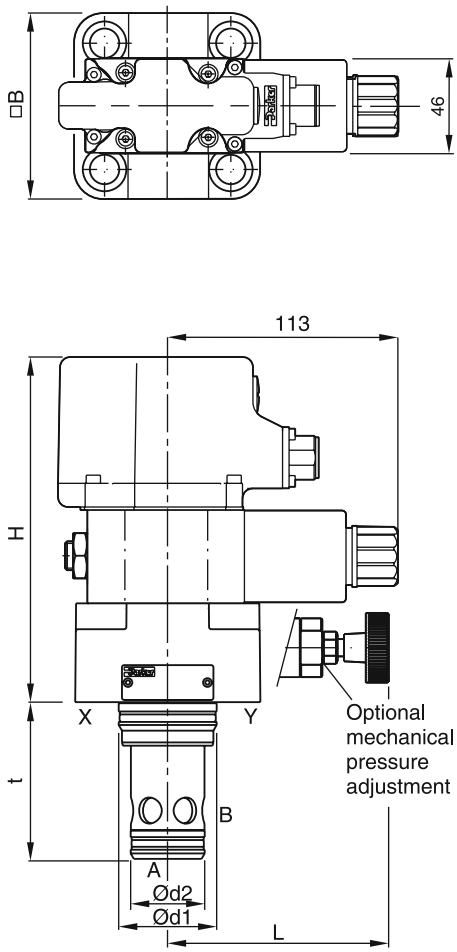

NG40 - NG63 *

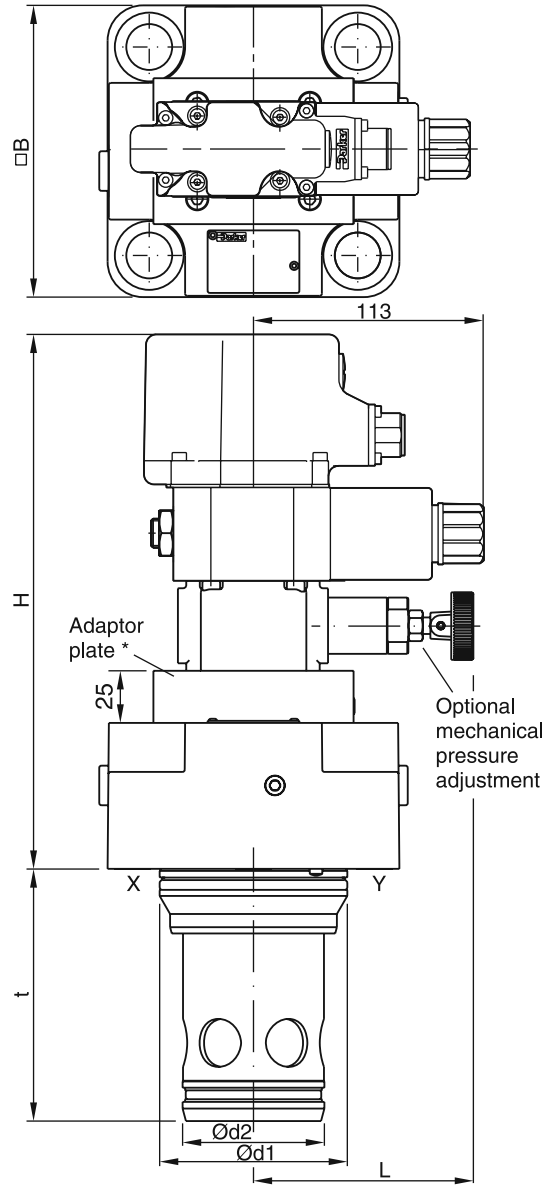

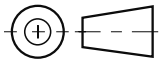

NG	H	B	d_1	d_2	t	L
16	179	79 [1]	32	25	56	114
25	124	85	45	34	72	102
32	129	102	60	45	85	95
40	139 (182.2) [2]	125	75	55	105	106
50	174 (217.2) [2]	140	90	68	122	106
63	189 (232.2) [2]	180	120	90	155	106

NG	Kit	ISO 4762-12.9	[Nm]	Kit NBR	Kit FPM
16	BK414	4 x M8x40	31.8	SK-RE16EN	SK-RE16EV
25	BK391	4 x M12x50	108	SK-RE25EN	SK-RE25EV
32	BK415	4 x M16x55	264	SK-RE32EN	SK-RE32EV
40	BK416	4 x M20x70	517	SK-RE40EN	SK-RE40EV
50	BK417	4 x M20x75	517	SK-RE50EN	SK-RE50EV
63	BK418	4 x M30x100	1775	SK-RE63EN	SK-RE63EV

* NG40 without adaptor plate.
[1] Width 65 mm.
[2] With mechanical pressure adjustment.

RE_E_T UK.INDD CM 16.04.15

Unloading valves series UR*E consist of a mechanical pilot stage and a slip-in cartridge main stage. These valves are used to unload a circuit at low pressure. The mechanically adjustable pressure signal to unload the main stage has to be applied to port X. The nominal pressure differential between opening and closing is 15 %.

In addition the series US*E is vented by electrical operation. The UR*E/US*E model codes embrace the pilot valves, covers and cartridges that are also offered as separate items. See combination examples for details.

US25E

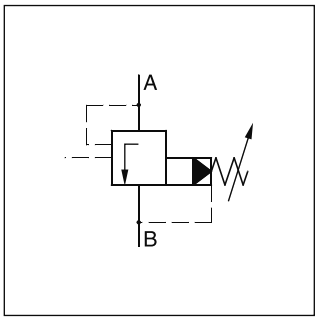

UR*E

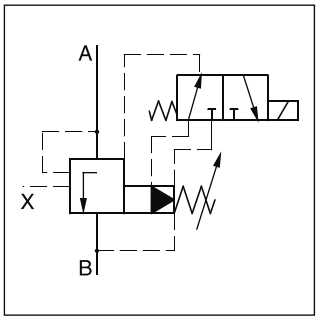

US*E

Features

- Pilot operated unloading valve
- Cavity and mounting pattern according to ISO 7368
- 4 pressure stages
- 2 switching types (series US*E)
- 2 adjustment modes
  - Hand knob
  - Turning knob with key lock
- 6 sizes NG16 to NG63

Note

Port X only usable for remote vent function

UR*E

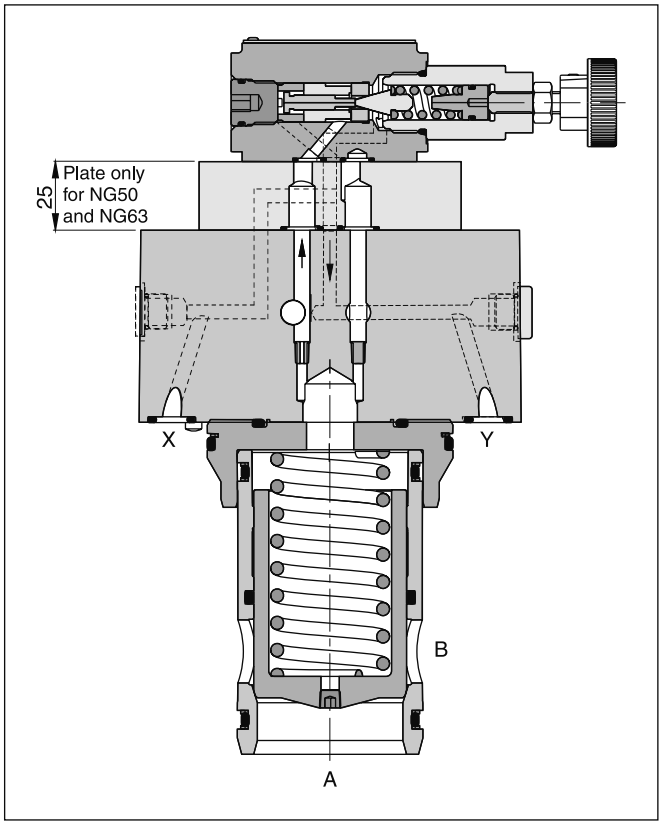

US*E

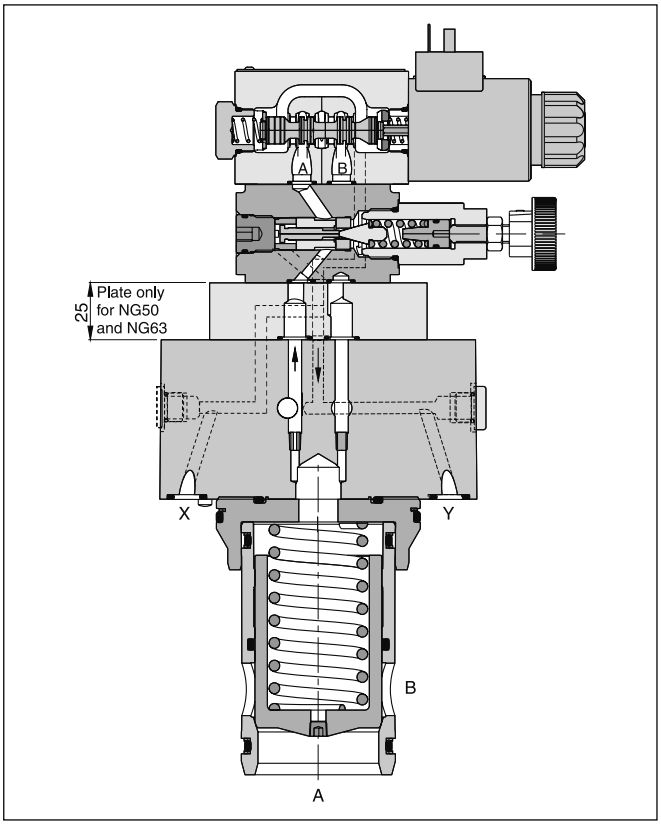

Ordering Code

Series UR*E / US*E

UR*E

UR		E			1	S		
Unloading valve	Nominal size	Slip-in mounting ISO 7368	Pressure stages	Adjust-ment	Pilot oil (pilot internal, drain external)	Poppet spring	Seal	Design series (not required for ordering)

Code	Nominal size
16	NG16
25	NG25
32	NG32
40	NG40
50	NG50
63	NG63

Code	Pressure stages
07	up to 70 bar
17	up to 175 bar
25	up to 250 bar
35	up to 350 bar

Code	Adjustment
S	Hand knob (standard)
A	Acorn nut with lead seal
L	Cylinder lock

Code	Seal
N	NBR
V	FPM

US*E

US		E			1	S				W		
Unloading valve with elec. un-loading	Nominal size	Slip-in mounting ISO 7368	Pressure stages	Adjust-ment	Pilot oil (pilot int., drain ext.)	Poppet spring	Seal	Switching type	Solenoid	Without plug	Options	Design series (not required for ordering)

Code	Nominal size
16	NG16
25	NG25
32	NG32
40	NG40
50	NG50
63	NG63

Code	Pressure stages
07	up to 70 bar
17	up to 175 bar
25	up to 250 bar
35	up to 350 bar

Code	Adjustment
S	Hand knob (standard)
A	Acorn nut with lead seal
L	Cylinder lock

Code	Spool type
omit	Standard
S	with slow unloading

Code	Solenoid
K	12 V
J	24 V
U [1)]	98 V
G [1)]	205 V

Code	Switching type
1	Solenoid not activated, unpress. circulation
9	Solenoid activated, unpress. circulation

Code	Seal
N	NBR
V	FPM

[1)] To be used in combination with rectifier plugs at 120 VAC / 230 VAC power supply.

8

URE-USE UK.INDD CM 16.04.15

UR*E

General							
Nominal size		**NG16**	**NG25**	**NG32**	**NG40**	**NG50**	**NG63**
Interface		Slip-in mounting acc. ISO 7368					
Mounting position		as desired, horizontal mounting preferred					
Ambient temperature	[°C]	-20...+60					
$MTTF_D$ value	[years]	75					
Weight	[kg]	2.2	3.5	4.9	8.0	13.7	22.8
Hydraulic							
Max. operating pressure	[bar]	Ports A and X up to 350, Ports B and Y 30					
Pressure stages	[bar]	75, 175, 250, 350					
Pressure differential, nominal	[%]	15					
Nominal flow	[l/min]	220	500	950	1400	2300	4000
Fluid		Hydraulic oil according to DIN 51524					
Fluid temperature	[°C]	-20...+70 (NBR: -25...+70)					
Viscosity, permitted	[cSt] / [mm²/s]	20...400					
recommended	[cSt] / [mm²/s]	30...80					
Filtration		ISO 4406 (1999); 18/16/13					

US*E

General							
Nominal size		**NG16**	**NG25**	**NG32**	**NG40**	**NG50**	**NG63**
Interface		Slip-in mounting acc. ISO 7368					
Mounting position		as desired, horizontal mounting preferred					
Ambient temperature	[°C]	-20...+60					
$MTTF_D$ value	[years]	75					
Weight	[kg]	2.7	5.2	6.4	9.5	15.2	24.3
Hydraulic							
Max. operating pressure	[bar]	Ports A and X 350, ports B and Y 30					
Pressure stages	[bar]	75, 175, 250, 350					
Pressure differential, nominal	[%]	15					
Nominal flow	[l/min]	220	500	950	1400	2300	4000
Fluid		Hydraulic oil according to DIN 51524					
Fluid temperature	[°C]	-20...+70 (NBR: -25...+70)					
Viscosity, permitted	[cSt] / [mm²/s]	20...400					
recommended	[cSt] / [mm²/s]	30...80					
Filtration		ISO 4406 (1999); 18/16/13					
Electrical (solenoid)							
Duty ratio		100 % ED; CAUTION: coil temperature up to 150 °C possible					
Protection class		IP65 in accordance with EN 60529 (with correctly mounted plug-in connector)					
	Code	K	J	U	G		
Supply voltage	[V]	12 V =	24 V =	98 V =	205 V =		
Tolerance supply voltage	[%]	±10	±10	±10	±10		
Current consumption	[A]	2.72	1.29	0.33	0.13		
Power consumption	[W]	32.7	31	31.9	28.2		
Solenoid connection		Connector as per EN175301-803, solenoid identification as per ISO 9461					
Wiring min.	[mm²]	3 x 1.5 recommended					
Wiring length max.	[m]	50 recommended					

p/Q performance curve [1)]

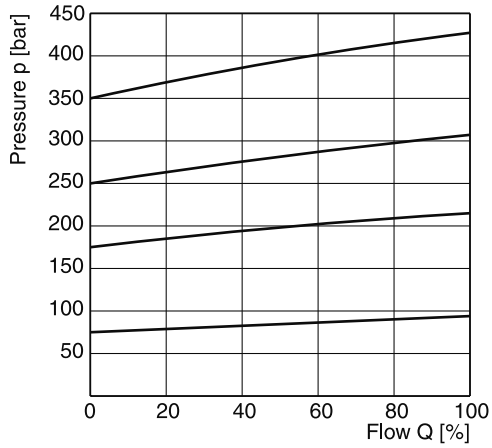

Minimum pressure curve

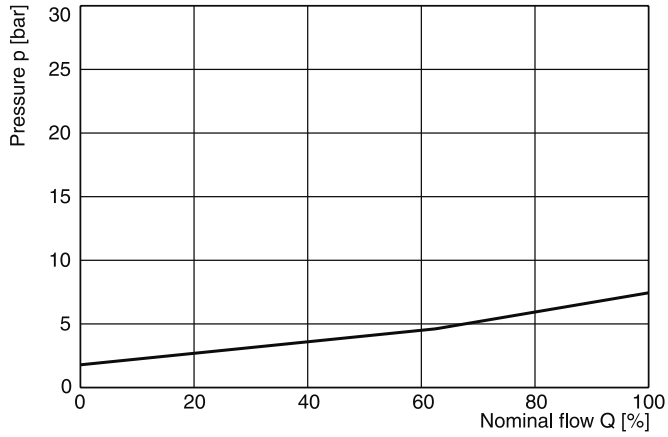

All characteristic curves measured with HLP46 at 50 °C.

8

[1)] The performance curves are measured with external drain.
For internal drain the tank pressure has to be added to curve.

Dimensions UR*E

NG16 to NG32

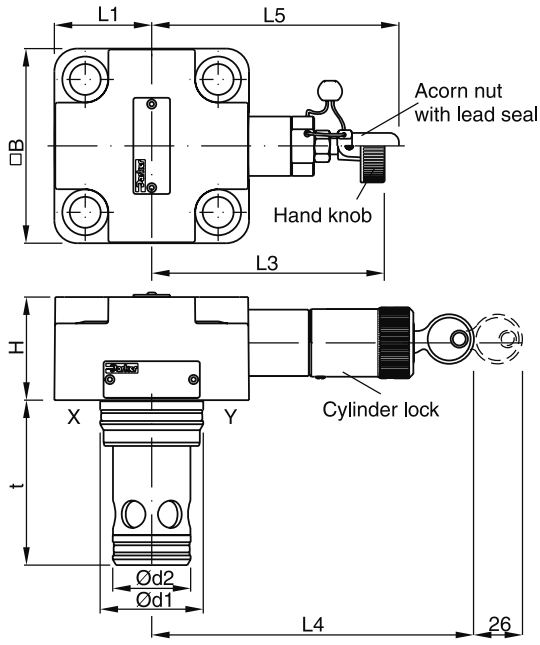

NG40 to NG63 [1]

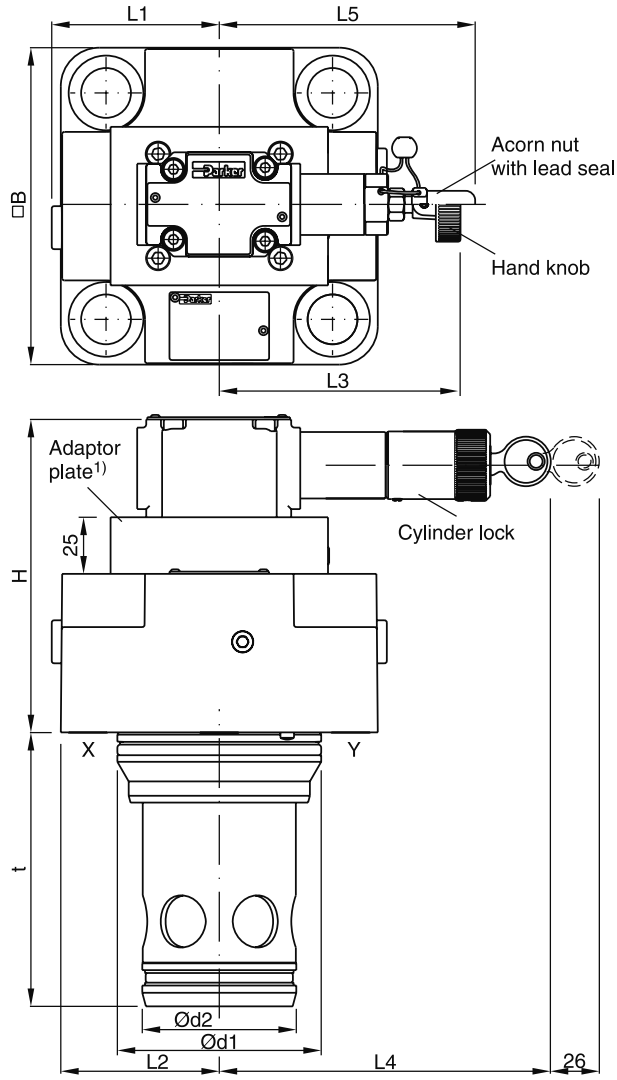

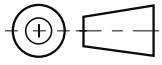

NG	H	B	L1	L2	L3	L4	L5	d1	d2	t
16	40	65 [2]	32.5	—	114	152	117	32	25	56
25	47	85	42.5	—	102	139	106	45	34	71
32	50	102	51	—	95	131	97.5	60	45	85
40	106	125	62.5	66.5	106	144	108	75	55	105
50	141	140	70	74	106	144	108	90	68	121
63	155	180	90	94	106	144	108	120	90	155

NG	Kit	ISO 4762-12.9	[Nm]	Kit	
				NBR	FPM
16	BK414	4 x M8x40	31.8	SK-R16EN	SK-R16EV
25	BK391	4 x M12x50	108	SK-R25EN	SK-R25EV
32	BK415	4 x M16x55	264	SK-R32EN	SK-R32EV
40	BK416	4 x M20x70	517	SK-R40EN	SK-R40EV
50	BK417	4 x M20x75	517	SK-R50EN	SK-R50EV
63	BK418	4x M30x100	1775	SK-R63EN	SK-R63EV

[1] NG40 without adaptor plate.
[2] Width 79 mm.

URE-USE UK.INDD CM 16.04.15

Dimensions US*E

NG16 to NG32

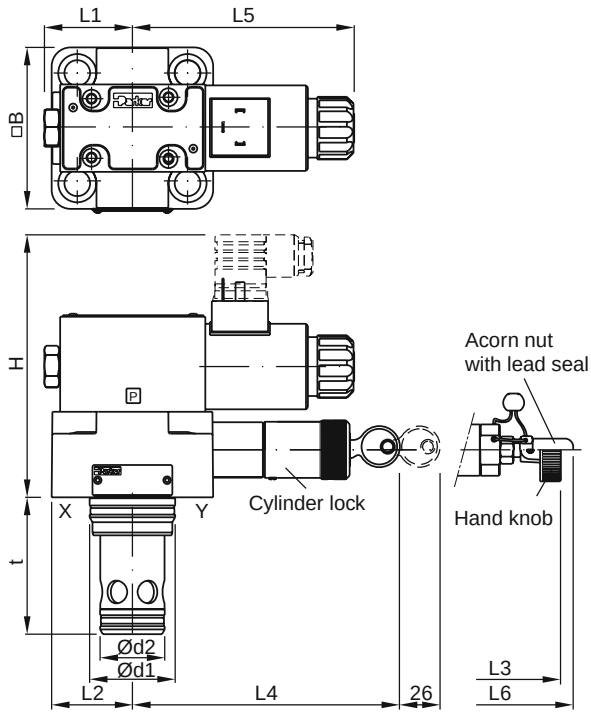

NG40 to NG63 [1]

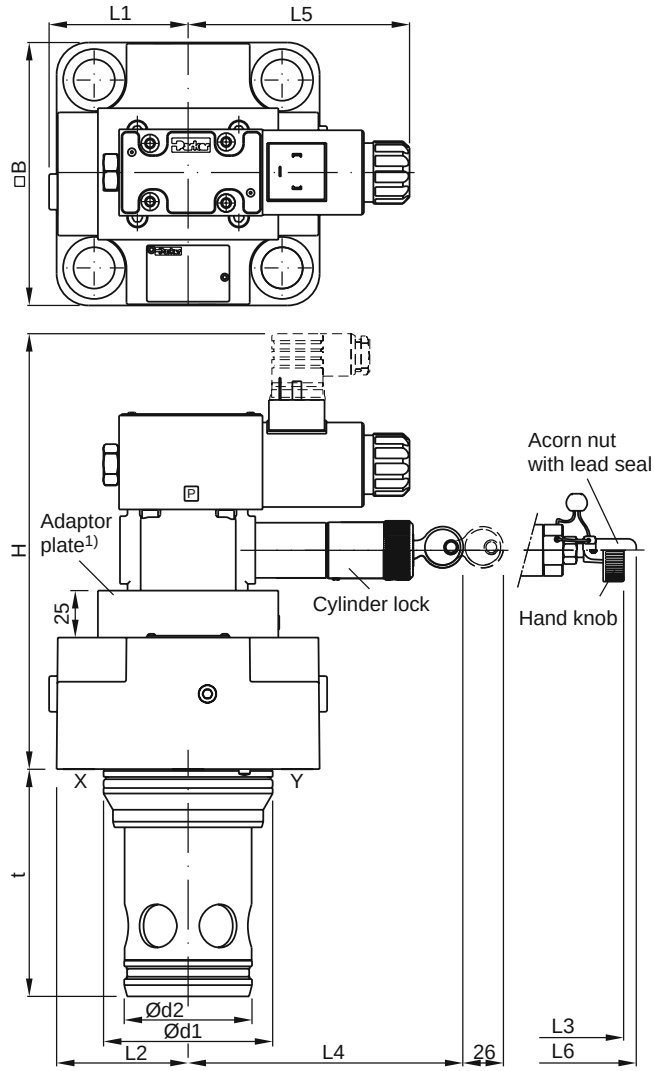

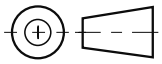

NG	H	B	L1	L2	L3	L4	L5	L6	d1	d2	t
16	40	65 [2]	32	32.5	114	152	127.5	117	32	25	56
25	47	85	46	42.5	102	139	117	106	45	34	71
32	50	102	51	51	95	131	112.5	97.5	60	45	85
40	106	125	66	62.5	106	144	114	108	75	55	105
50	141	140	74	70	106	144	114	108	90	68	121
63	155	180	94	90	106	144	114	108	120	90	155

NG	Kit	ISO 4762-12.9	[Nm]	Kit	
				NBR	FPM
16	BK414	4 x M8x40	31.8	SK-RS16EN	SK-RS16EV
25	BK391	4 x M12x50	108	SK-RS25EN	SK-RS25EV
32	BK415	4 x M16x55	264	SK-RS32EN	SK-RS32EV
40	BK416	4 x M20x70	517	SK-RS40EN	SK-RS40EV
50	BK417	4 x M20x75	517	SK-RS50EN	SK-RS50EV
63	BK418	4 x M30x100	1775	SK-RS63EN	SK-RS63EV

[1] NG40 without adaptor plate.
[2] Width 79 mm.

URE-USE UK.INDD CM 16.04.15

Pressure relief valve with cover with integrated pressure relief function

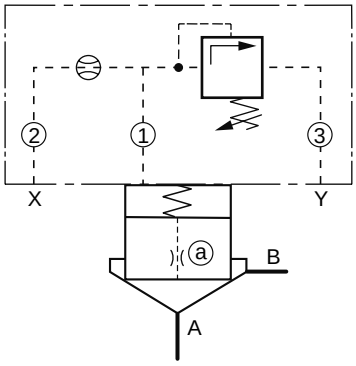

NG16 - NG32

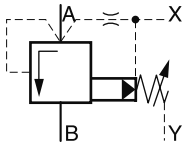

8

Description	Type		
	NG16	NG25	NG32
Cover incl. pressure valve [1]	C016Fxxxxxxxxxx	C025Fxxxxxxxxxx	C032Fxxxxxxxxxx
Cover orifice ①	M5xØ1.0	M5xØ1.1	M6xØ1.2
Cover orifice ②	M4xØ0.8	M5xØ0.9	M6xØ1.0
Cover orifice ③	M5xØ99	M5xØ99	M6xØ99
Cartridge [2]	CP016C07S00X	CP025C07S00X	CP032C07S00X
Poppet orifice ⓐ	1/16NPT x Ø0.9	1/16NPT x Ø1.1	1/16NPT x Ø1.2
Spring	1.6 bar, typ S		
Volume reduction	45036578	45036579	45036580
Bolt kit cover	BK414, 4x M8x40	BK391, 4x M12x50	BK415, 4x M16x55

Shown orifice Ø and springs are recommendations.
xxØ00 = plug
xxØ99 = open

[1] Complete type see ordering code C*F.
[2] Complete type see ordering code CP*.

Examples pressure.INDD CM 16.04.15

Pressure relief valve with separate pilot

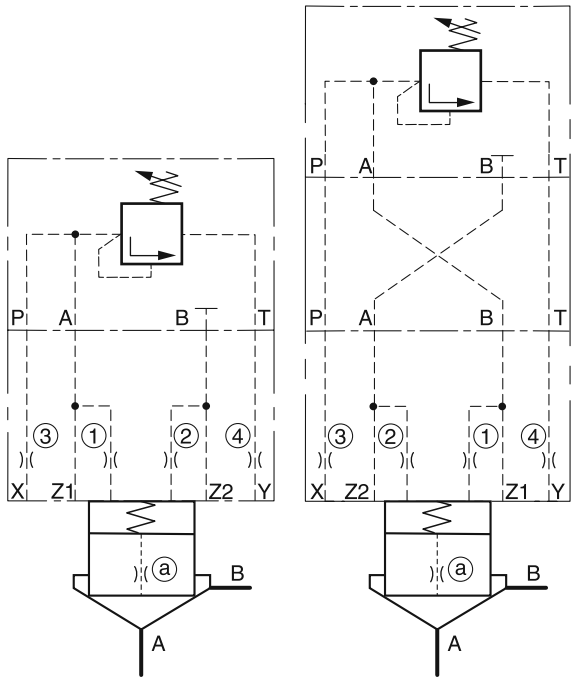

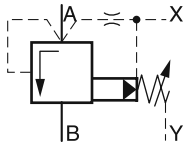

8

Adaptor plates see chapter 12

Description	Type					
	NG16	NG25	NG32	NG40	NG50	NG63
Pressure valve [1]	R06Mxxx4x					
Adaptor plate [2]	without				PADA1007/A-B/B-A	
Cover [3]	C016CA*	C025CA*	C032CA*	C040CA*	C050CA*	C063CA*
Cover orifice ①	M5xØ1.1	M5xØ1.3	M5xØ1.4	M5xØ1.5	M6xØ1.6	M6xØ1.7
Cover orifice ②	M5xØ00				M6xØ00	
Cover orifice ③	M5xØ99	M6xØ99			M8xØ99	
Cover orifice ④	M5xØ1.3	M6xØ1.5	M6xØ1.7	M6xØ1.8	M8xØ2.0	M8xØ2.2
Cartridge [4]	CP016C07*	CP025C07*	CP032C07*	CP040C07*	CP050C07*	CP063C07*
Poppet orifice ⓐ	1/16NPT x Ø0.9	1/16NPT x Ø1.1	1/16NPT x Ø1.2	1/16NPT x Ø1.3	1/16NPT x Ø1.4	1/16NPT x Ø1.5
Spring	1.6 bar, type S					
Volume reduction	45036578	45036579	45036580	45036581	45036582	45036583
Bolt kit cover	BK414, 4x M8x40	BK391, 4x M12x50	BK415, 4x M16x55	BK416, 4x M20x70	BK417, 4x M20x75	BK418, 4x M30x100
Bolt kit pilot	BK443, 4x M5x45					

Shown orifice Ø and springs are recommendations.
xxØ00 = plug
xxØ99 = open

[1] Complete type see pilot valves.
[2] Included O-rings and mounting bolts.
[3] Complete type see ordering code C*C.
[4] Complete type see ordering code CP*.

Pressure relief valve with electrical vent function, normally open and cover with integrated pressure relief function

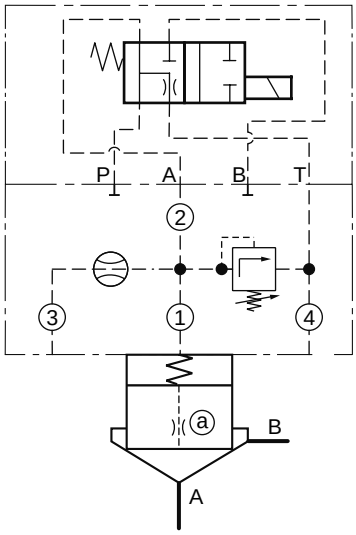

NG16 - NG32

Flow A → B

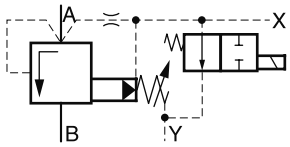

8

Description	Type NG16	NG25	NG32
4/2 DC valve [1]	D1VW104K*		
Cover incl. pressure valve [2]	C016Gxxxxxxxxxx	C025Gxxxxxxxxxx	C032Gxxxxxxxxxx
Cover orifice ①	M5xØ1.0	M5xØ1.1	M6xØ1.2
Cover orifice ②	M5xØ99	M5xØ99	M6xØ99
Cover orifice ③	M4xØ00	M5xØ00	M6xØ00
Cover orifice ④	M5xØ1.2	M5xØ1.3	M6xØ1.4
Cartridge [3]	CP016C07*	CP025C07*	CP032C07*
Poppet orifice ⓐ	1/16NPT x Ø0.8	1/16NPT x Ø0.8	1/16NPT x Ø1.0
Spring	1.6 bar, type S		
Volume reduction	45036578	45036579	45036580
Bolt kit cover	BK414, 4x M8x40	BK391, 4x M12x50	BK415, 4x M16x55
Bolt kit 4/2 DC valve	BK375, 4x M5x30		

Shown orifice Ø and springs are recommendations.
xxØ00 = plug
xxØ99 = open

[1] Complete type see chapter “Directional Control Valves“, series D1VW.
[2] Complete type see ordering code C*G.
[3] Complete type see ordering code CP*.

Examples pressure.INDD CM 16.04.15

Pressure relief valve with electrical vent function, normally open and pilot in sandwich design

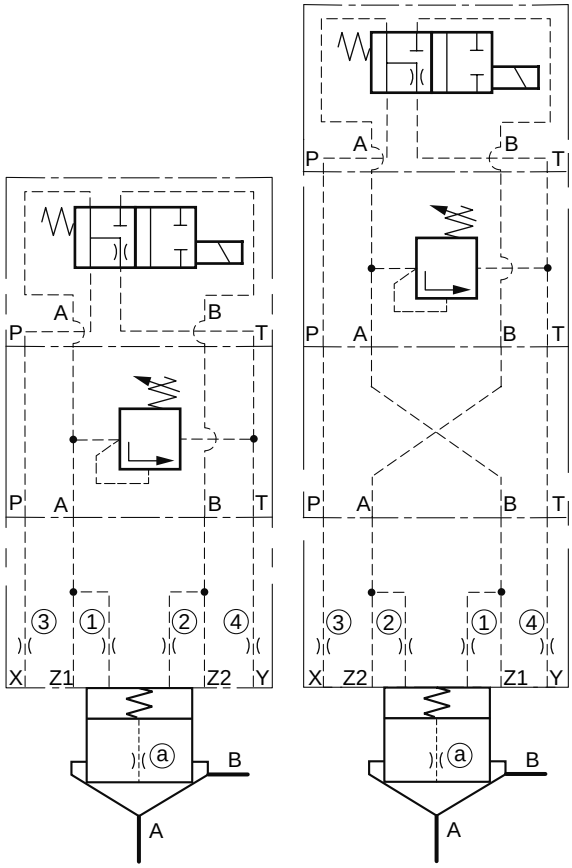

Flow A → B

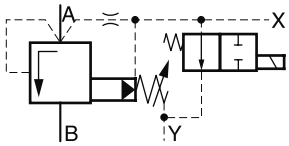

Adaptor plates see chapter 12

8

Description	Type					
	NG16	NG25	NG32	NG40	NG50	NG63
4/2 DC valve [1]	D1VW104K*					
Pressure valve [2]	V-ZUDB1ATxZ07x					
Adaptor plate NG10-NG06 [3]	without				PADA1007/A-B/B-A	
Cover [4]	C016CA*	C025CA*	C032CA*	C040CA*	C050CA*	C063CA*
Cover orifice ①	M5xØ1.1	M5xØ1.3	M5xØ1.4	M5xØ1.5	M6xØ1.6	M6xØ1.7
Cover orifice ②	M5xØ00				M6xØ00	
Cover orifice ③	M5xØ99	M6xØ99			M8xØ99	
Cover orifice ④	M5xØ1.3	M6xØ1.5	M6xØ1.5	M6xØ1.8	M8xØ2.0	M8xØ2.2
Cartridge [5]	CP016C07*	CP025C07*	CP032C07*	CP040C07*	CP050C07*	CP063C07*
Poppet orifice ⓐ	1/16NPT x Ø0.9	1/16NPT x Ø1.1	1/16NPT x Ø1.2	1/16NPT x Ø1.3	1/16NPT x Ø1.4	1/16NPT x Ø1.5
Spring	1.6 bar, type S					
Volume reduction	45036578	45036579	45036580	45036581	45036582	45036583
Bolt kit cover	BK414, 4x M8x40	BK391, 4x M12x50	BK415, 4x M16x55	BK416, 4x M20x70	BK417, 4x M20x75	BK418, 4x M30x100
Bolt kit pilot	TK1482					

Shown orifice Ø and springs are recommendations.
xxØ00 = plug
xxØ99 = open

[1] Complete type see chapter “Directional Control Valves“, series D1VW.
[2] Complete types see pilot valves.
[3] Included O-rings and mounting bolts.
[4] Complete type see ordering code C*C.
[5] Complete type see ordering code CP*.

Examples pressure.INDD CM 16.04.15

Pressure relief valve with electrical vent function, normally closed and cover with integrated pressure relief function

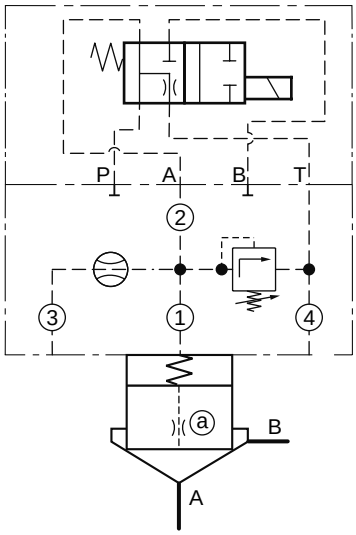

NG16 - NG32

Flow A ⟶ B

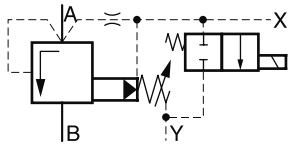

8

Description	Type		
	NG16	NG25	NG32
4/2 DC valve [1]		D1VW105K*	
Cover incl. pressure valve [2]	C016Gxxxxxxxxxxxx	C025Gxxxxxxxxxxxx	C032Gxxxxxxxxxxxx
Cover orifice ①	M5xØ1.0	M5xØ1.1	M6xØ1.4
Cover orifice ②	M5xØ99	M5xØ99	M6xØ99
Cover orifice ③	M4xØ00	M5xØ00	M6xØ00
Cover orifice ④	M5xØ1.2	M5xØ1.3	M6xØ1.4
Cartridge [3]	CP016C07*	CP025C07*	CP032C07*
Poppet orifice ⓐ	1/16NPT x Ø0.8	1/16NPT x Ø0.8	1/16NPT x Ø1.0
Spring		1.6 bar, type S	
Volume reduction	45036578	45036579	45036580
Bolt kit cover	BK414, 4x M8x40	BK391, 4x M12x50	BK415, 4x M16x55
Bolt kit pilot		BK375, 4x M5x30	

Shown orifice Ø and springs are recommendations.
xxØ00 = plug
xxØ99 = open

[1] Complete type see chapter “Directional Control Valves“, series D1VW.
[2] Complete type see ordering code C*G.
[3] Complete type see ordering code CP*.

Examples pressure.INDD CM 16.04.15

Pressure relief valve with electrical vent function, normally closed and pilot in sandwich design

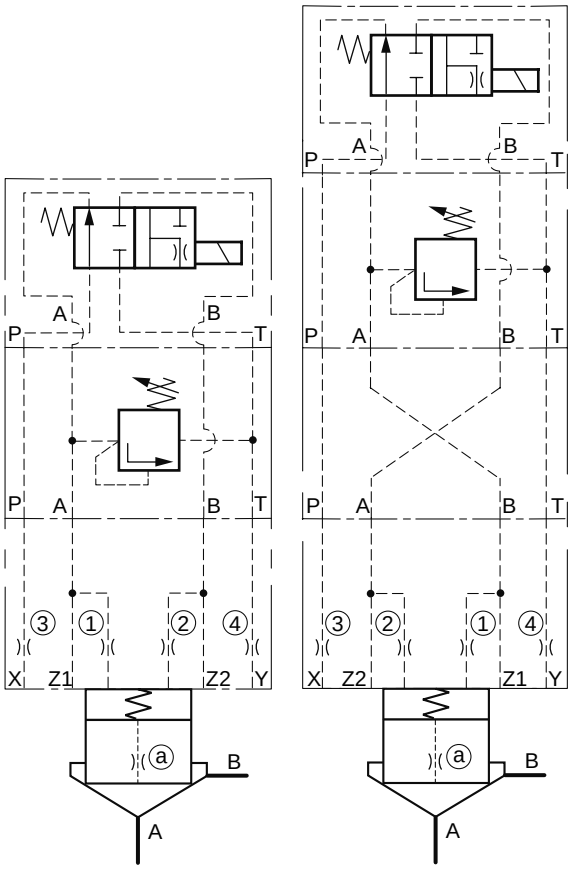

NG16 - NG40

Flow A ⟶ B

NG50 - NG63

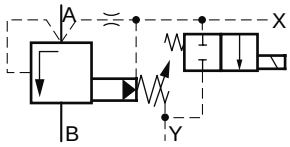

Adaptor plates see chapter 12

Description	Type					
	NG16	NG25	NG32	NG40	NG50	NG63
4/2 DC valve [1]	D1VW105K*					
Pressure valve [2]	V-ZUDB1ATxZ07x					
Adaptor plate [3]	without				PADA1007/A-B/B-A	
Cover [4]	C016CA*	C025CA*	C032CA*	C040CA*	C050CA*	C063CA*
Cover orifice ①	M5xØ1.1	M5xØ1.3	M5xØ1.4	M5xØ1.5	M6xØ1.6	M6xØ1.7
Cover orifice ②	M5xØ00				M6xØ00	
Cover orifice ③	M5xØ99	M6xØ99			M8xØ99	
Cover orifice ④	M5xØ1.3	M6xØ1.5	M6xØ1.7	M6xØ1.8	M8xØ2.0	M8xØ2.2
Cartridge [5]	CP016C07*	CP025C07*	CP032C07*	CP040C07*	CP050C07*	CP063C07*
Poppet orifice ⓐ	1/16NPT x Ø0.9	1/16NPT x Ø1.1	1/16NPT x Ø1.2	1/16NPT x Ø1.3	1/16NPT x Ø1.4	1/16NPT x Ø1.5
Spring	1.6 bar, type S					
Volume reduction	45036578	45036579	45036580	45036581	45036582	45036583
Bolt kit cover	BK414, 4x M8x40	BK391, 4x M12x50	BK415, 4x M16x55	BK416, 4x M20x70	BK417, 4x M20x75	BK418, 4x M30x100
Bolt kit pilot	TK1482					

Shown orifice Ø and springs are recommendations.
xxØ00 = plug
xxØ99 = open

[1] Complete type see chapter “Directional Control Valves“, series D1VW.
[2] Complete types see pilot valves.
[3] Included O-rings and mounting bolts.
[4] Complete type see ordering code C*C.
[5] Complete type see ordering code CP*.

Examples pressure.INDD CM 16.04.15

Proportional pressure relief valve

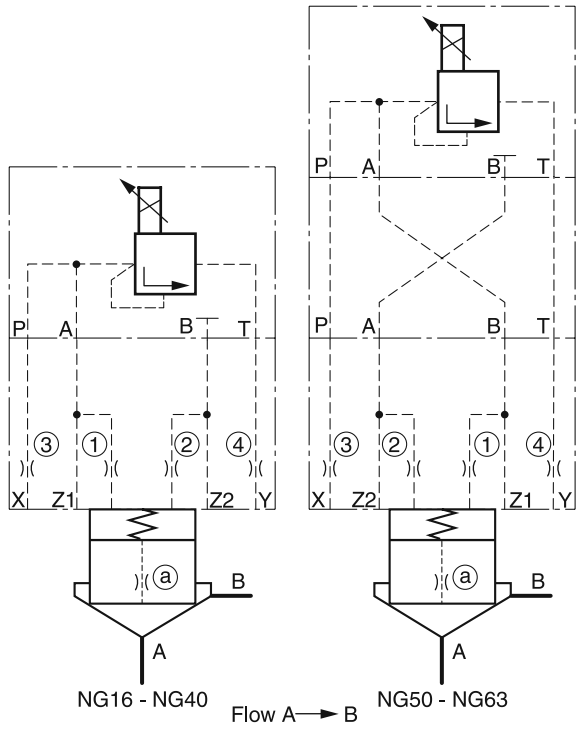

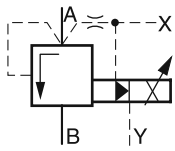

Adaptor plates see chapter 12

Description	Type					
	NG16	NG25	NG32	NG40	NG50	NG63
Prop. pressure valve [1]	RE06MxW2V1KW					
Adaptor plate [2]	without				PADA1007/A-B/B-A	
Cover [3]	C016CA*	C025CA*	C032CA*	C040CA*	C050CA*	C063CA*
Cover orifice ①	M5xØ1.4	M5xØ1.4	M5xØ1.4	M5xØ1.4	M6xØ1.4	
Cover orifice ②	M5xØ00				M6xØ00	
Cover orifice ③	M5xØ99	M6xØ99			M8xØ99	
Cover orifice ④	M5xØ1.5	M6xØ1.5	M6xØ1.5	M6xØ1.5	M8xØ1.5	
Cartridge [4]	CP016C07*	CP025C07*	CP032C07*	CP040S07*	CP050S07*	CP063S07*
Poppet orifice ⓐ	1/16NPT x Ø1.3	1/16NPT x Ø1.3	1/16NPT x Ø1.3	1/16NPT x Ø1.3	1/16NPT x Ø1.3	
Spring	0.5 bar, type S					
Volume reduction	45036578	45036579	45036580	45036581	45036582	45036583
Bolt kit cover	BK414, 4x M8x40	BK391, 4x M12x50	BK415, 4x M16x55	BK416, 4x M20x70	BK417, 4x M20x75	BK418, 4x M30x100
Bolt kit pilot	BK375, 4x M5x30					

Shown orifice Ø and springs are recommendations.
xxØ00 = plug
xxØ99 = open

[1] Complete type see chapter “Pressure Valves“, series RE06M*W.
[2] Inclusive O-Ringe and mounting bolts.
[3] Complete type see ordering code C*C.
[4] Complete type see ordering code CP*.

Proportional pressure relief valve with mechanical maximum pressure protection and cover with integrated pressure relief function

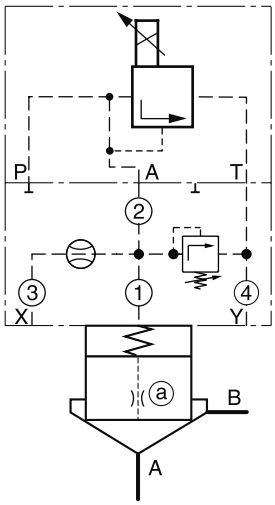

Flow A ⟶ B

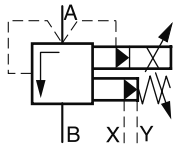

8

Description	Type		
	NG16	NG25	NG32
Prop. pressure valve [1]	RE06MxW2V1xW		
Cover incl. pressure valve [2]	C016Gxxxxxxxxxxxx	C025Gxxxxxxxxxxxx	C032Gxxxxxxxxxxxx
Cover orifice ①	M5xØ1.4	M5xØ1.4	M6xØ1.4
Cover orifice ②	M5xØ99	M5xØ99	M6xØ99
Cover orifice ③	M4xØ99	M5xØ99	M6xØ99
Cover orifice ④	M5xØ1.5	M5xØ1.5	M6xØ1.5
Cartridge [3]	CP016C07*	CP025C07*	CP032C07*
Poppet orifice ⓐ	1/16NPT x Ø1.3	1/16NPT x Ø1.3	1/16NPT x Ø1.3
Spring	1.6 bar, type S		
Volume reduction	45036578	45036579	45036580
Bolt kit cover	BK414, 4x M8x40	BK391, 4x M12x50	BK415, 4x M16x55
Bolt kit pilot	BK375, 4x M5x30		

Shown orifice Ø and springs are recommendations.
xxØ00 = plug
xxØ99 = open

[1] Complete type see chapter “Pressure Valves“, series RE06M*W.
[2] Complete type see ordering code C*G.
[3] Complete type see ordering code CP*.

Examples pressure.INDD CM 16.04.15

Proportional pressure relief valve with mechanical maximum pressure protection in sandwich design

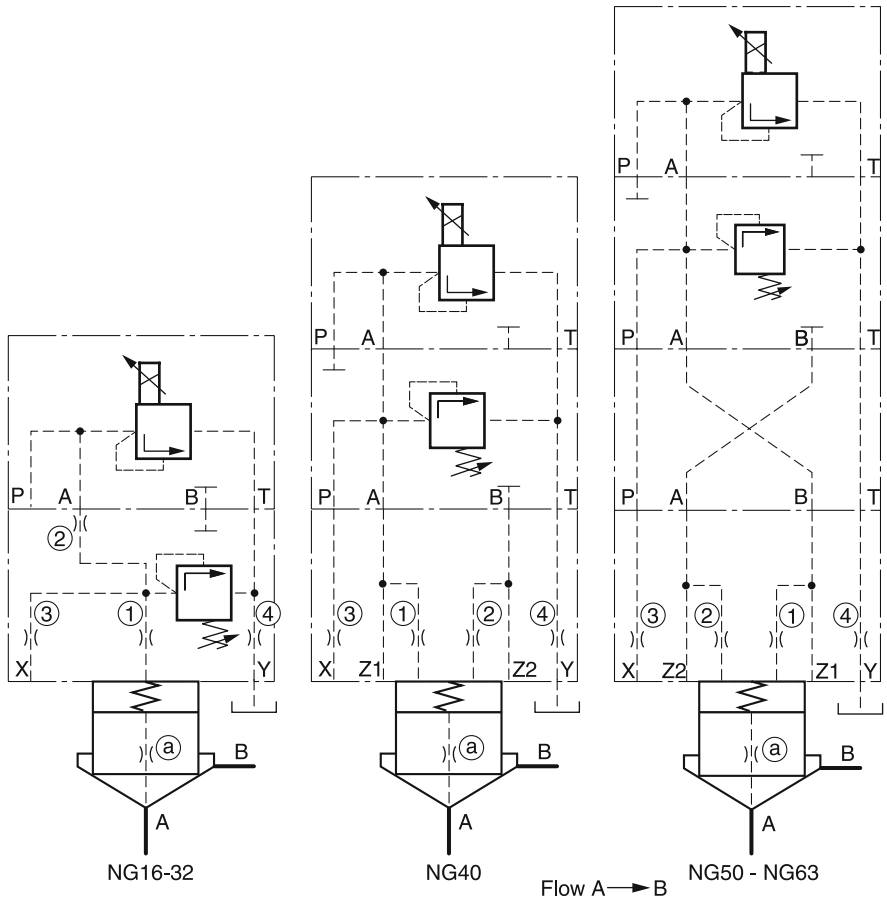

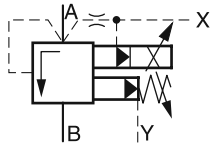

Adaptor plates see chapter 12

8

Description	Type					
	NG16	NG25	NG32	NG40	NG50	NG63
Prop. pressure valve [1]	RE06MxW2V1KW					
Max. pressure valve [2]	V-ZUDB1PTxZ07x					
Adaptor plate NG10-NG06 [3]	without				PADA1007/A-B/B-A	
Cover [4]	C016CA*	C025CA*	C032CA*	C040CA*	C050CA*	C063CA*
Cover orifice ①	M5xØ1.4	M5xØ1.4		M5xØ1.4	M6xØ1.4	
Cover orifice ②	M5xØ99				M6xØ00	
Cover orifice ③	M5xØ99	M6xØ99			M8xØ99	
Cover orifice ④	M5xØ1.5	M6xØ1.5		M6xØ1.5	M8xØ1.5	
Cartridge [5]	CP016C07*	CP025C07*	CP032C07*	CP040S07*	CP050S07*	CP063S07*
Poppet orifice ⓐ	1/16NPT x Ø1.3	1/16NPT x Ø1.3	1/16NPT x Ø1.3	1/16NPT x Ø1.3	1/16NPT x Ø1.3	
Spring	0.5 bar, type N					
Volume reduction	45036578	45036579	45036580	45036581	45036582	45036583
Bolt kit cover	BK414, 4x M8x40	BK391, 4x M12x50	BK415, 4x M16x55	BK416, 4x M20x70	BK417, 4x M20x75	BK418, 4x M30x100
Bolt kit pilot	TK1482					

Shown orifice Ø and springs are recommendations.
xxØ00 = plug
xxØ99 = open

[1] Complete type see chapter "Pressure Valves", series RE06M*W.
[2] Complete types see pilot valves.
[3] Included O-rings and mounting bolts.
[4] Complete type see ordering code C*C.
[5] Complete type see ordering code CP*.

Examples pressure.INDD CM 16.04.15

Unloading valve

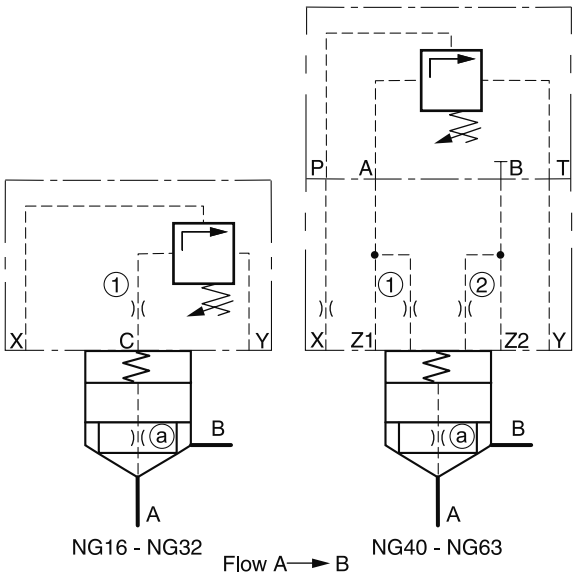

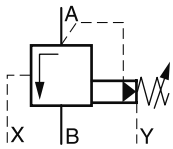

8

Adaptor plates see chapter 12

Description	Type					
	NG16	NG25	NG32	NG40	NG50	NG63
Unloading valve [1]	–			UR06Mxxx4x		
Adaptor plate NG10-NG06 [2]	–	–	–	–	PADA1007/A-B/B-A	
Cover [3]	on request			C040CA*	C050CA*	C063CA*
Cover orifice 1	M5xØ1.4				M6xØ1.4	
Cover orifice 2	M5xØ00				M6xØ00	
Cartridge [4]	CP16C07*	CP25C07*	CP032C07*	CP040S07*	CP050S07*	CP063S07*
Poppet orifice a	1/16NPT x Ø1.2					
Spring	1.6 bar, type S					
Bolt kit cover	BK414, 4x M8x40	BK391, 4x M12x50	BK415, 4x M16x55	BK416, 4x M20x70	BK417, 4x M20x75	BK418, 4x M30x100
Bolt kit pilot	BK443, 4x M5x45					

Shown orifice Ø and springs are recommendations.
xxØ00 = plug
xxØ99 = open

[1] Complete types see pilot valves.
[2] Included O-rings and mounting bolts.
[3] Complete type see ordering code C*C.
[4] Complete type see ordering code CP*.

Unloading valve with electrical vent function, normally open

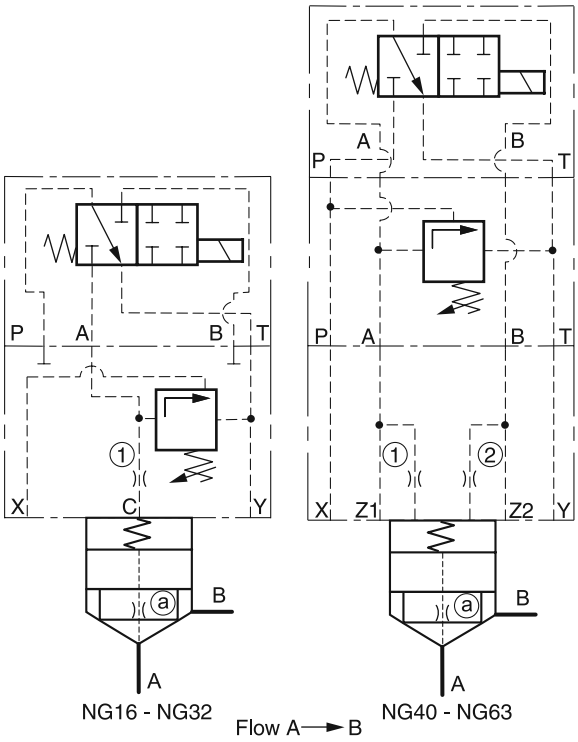

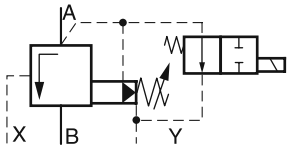

8

Adaptor plates see chapter 12

Description	Type					
	NG16	NG25	NG32	NG40	NG50	NG63
4/2 DC valve [1]	–			D1VW076K*		
Pressure valve [2]	US06Mxxx4x					
Adaptor plate NG10-NG06 [3]	–	–	–	–	PADA1007/A-B/B-A	
Cover [4]	on request			C040CA*	C050CA*	C063CA*
Cover orifice 1	M5xØ1.4				M6xØ1.4	
Cover orifice 2	M5xØ00				M6xØ00	
Cartridge [5]	CP016C07*	CP025C07*	CP032C07*	CP040S07*	CP050S07*	CP063S07*
Poppet orifice a	1/16NPT x Ø1.2					
Spring	1.6 bar, type S					
Bolt kit cover	BK414, 4x M8x40	BK391, 4x M12x50	BK415, 4x M16x55	BK416, 4x M20x70	BK417, 4x M20x75	BK418, 4x M30x100
Bolt kit pilot	BK401, 4x M5x75					

Shown orifice Ø and springs are recommendations.
xxØ00 = plug
xxØ99 = open

[1] Complete type see chapter "Directional Control Valves", series D1VW.
[2] Complete types see pilot valves.
[3] Included O-rings and mounting bolts.
[4] Complete type see ordering code C*C.
[5] Complete type see ordering code CP*.

Unloading valve with electrical vent function, normally closed

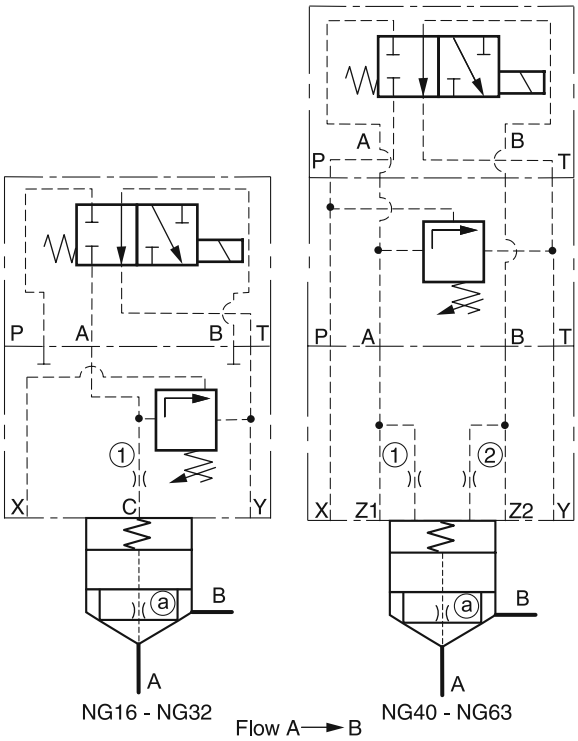

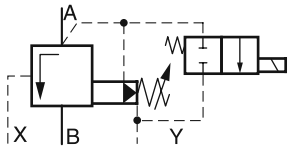

Adaptor plates see chapter 12

8

Description	Type					
	NG16	NG25	NG32	NG40	NG50	NG63
4/2 DC valve [1]	D1VW078K*					
Pressure valve [2]				US06Mxxx4x		
Adaptor plate NG10-NG06 [3]	–	–	–	–	PADA1007/A-B/B-A	
Cover [4]	on request			C040CA*	C050CA*	C063CA*
Cover orifice 1	M5xØ1.4				M6xØ1.4	
Cover orifice 2	M5xØ00				M6xØ00	
Cartridge [5]	CP016C07*	CP025C07*	CP032C07*	CP040S07*	CP050S07*	CP063S07*
Poppet orifice a	1/16NPT x Ø1.2					
Spring	1.6 bar, type S					
Bolt kit cover	BK414, 4x M8x40	BK391, 4x M12x50	BK415, 4x M16x55	BK416, 4x M20x70	BK417, 4x M20x75	BK418, 4x M30x100
Bolt kit pilot	BK401, 4x M5x75					

Shown orifice Ø and springs are recommendations.
xxØ00 = plug
xxØ99 = open

[1] Complete type see chapter “Directional Control Valves“, series D1VW.
[2] Complete types see pilot valves.
[3] Included O-rings and mounting bolts.
[4] Complete type see ordering code C*C.
[5] Complete type see ordering code CP*.

Pressure sequence valve

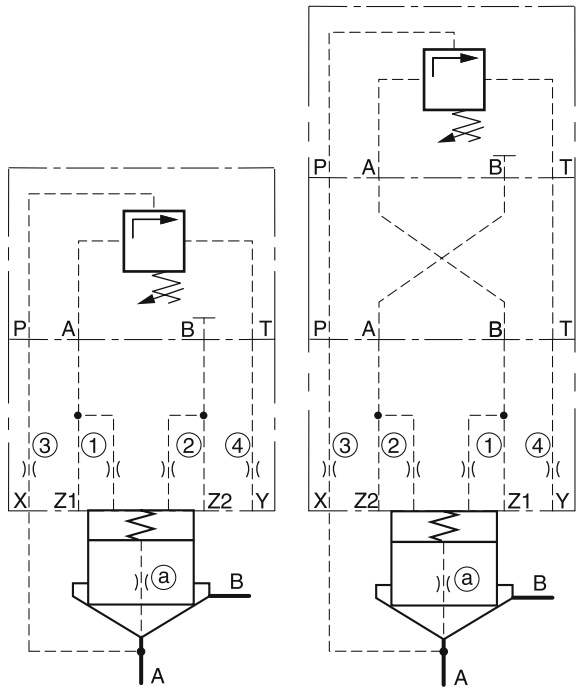

Flow A → B

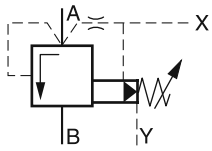

Adaptor plates see chapter 12

8

Description	Type					
	NG16	NG25	NG32	NG40	NG50	NG63
Press. sequ. valve [1]	S06Mxxx4x					
Adaptor plate NG10-NG06 [2]	without				PADA1007/A-B/B-A	
Cover [3]	C016CA*	C025CA*	C032CA*	C040CA*	C050CA*	C063CA*
Cover orifice ①	M5xØ1.1	M5xØ1.3	M5xØ1.4	M5xØ1.5	M6xØ1.6	M6xØ1.7
Cover orifice ②	M5xØ00				M6xØ00	
Cover orifice ③	M5xØ0.9	M6xØ1.1	M6xØ1.2	M6xØ1.3	M8xØ1.4	M8xØ1.5
Cover orifice ④	M5xØ1.3	M6xØ1.5	M6xØ1.7	M6xØ1.8	M8xØ2.0	M8xØ2.2
Cartridge [4]	CE016C01*	CE025C01*	CE032C01*	CE040C01*	CE050C01*	CE063C01*
Poppet orifice ⓐ	1/16NPT x Ø00					
Spring	1.6 bar, type S					
Bolt kit cover	BK414, 4x M8x40	BK391, 4x M12x50	BK415, 4x M16x55	BK416, 4x M20x70	BK417, 4x M20x75	BK418, 4x M30x100
Bolt kit pilot	BK443, 4x M5x45					

Shown orifice Ø and springs are recommendations.
xxØ00 = closed bottom NG16 - NG50, plug NG63
xxØ99 = open

[1] Complete types see pilot valves.
[2] Included O-rings and mounting bolts.
[3] Complete type see ordering code C*C.
[4] Complete type see ordering code CE*.

3-way compensator (in combination with proportional throttle valve)

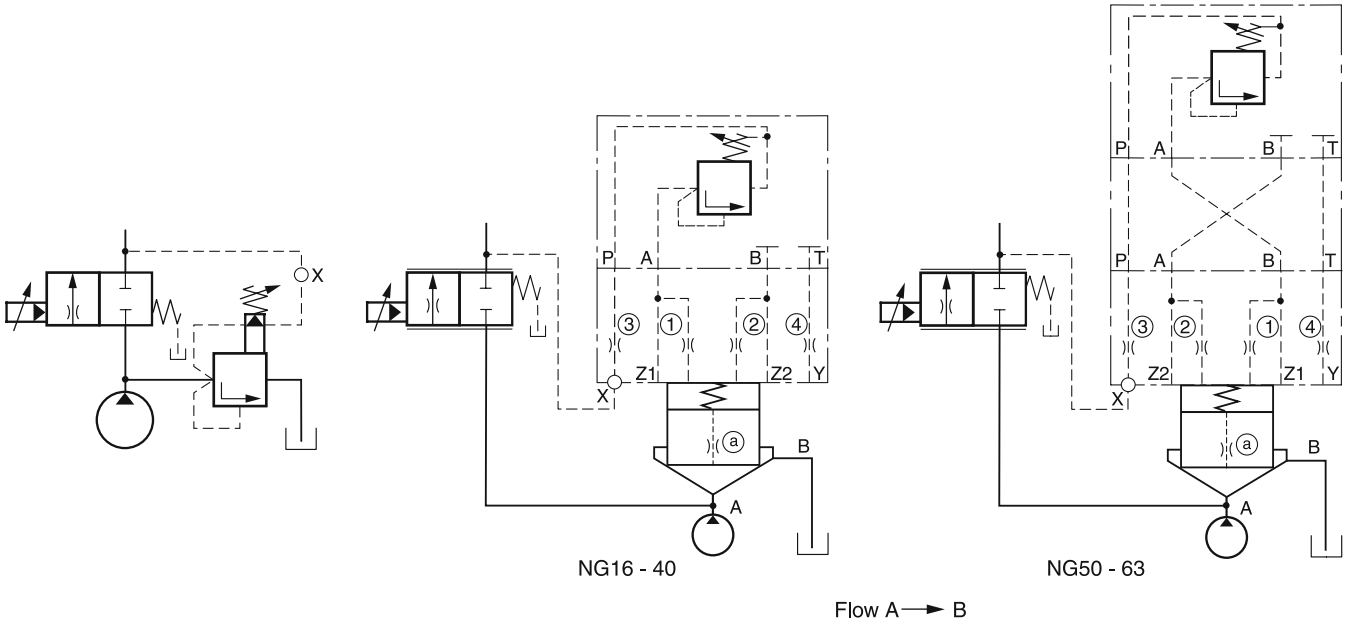

Adaptor plates see chapter 12

Description	Type					
	NG16	NG25	NG32	NG40	NG50	NG63
Preload valve [1]	DSBA100xP07x					
Adaptor plate NG10-NG06 [2]	without				PADA1007/A-B/B-A	
Cover [3]	C016CA*	C025CA*	C032CA*	C040CA*	C050CA*	C063CA*
Cover orifice ①	M5xØ1.1	M5xØ1.3	M5xØ1.4	M5xØ1.5	M6xØ1.6	M6xØ1.7
Cover orifice ②	M5xØ00				M6xØ00	
Cover orifice ③	M5xØ99	M6xØ99			M8xØ99	
Cover orifice ④	M5xØ1.3	M6xØ1.5	M6xØ1.7	M6xØ1.8	M8xØ2.0	M8xØ2.2
Cartridge [4]	CE016C01*	CE025C01*	CE032C01*	CE040C01*	CE050C01*	CE063C01*
Poppet orifice ⓐ	1/16NPT x Ø0.9	1/16NPT x Ø1.1	1/16NPT x Ø1.2	1/16NPT x Ø1.3	1/16NPT x Ø1.4	1/16NPT x Ø1.5
Spring	1.6 bar, type S					
Bolt kit cover	BK414, 4x M8x40	BK391, 4x M12x50	BK415, 4x M16x55	BK416, 4x M20x70	BK417, 4x M20x75	BK418, 4x M30x100
Bolt kit pilot	BK443, 4x M5x45					

Shown orifice Ø and springs are recommendations.
xxØ00 = closed bottom NG16 - NG50, plug NG63
xxØ99 = open

[1] Complete type see pilot valves.
[2] Included O-rings and mounting bolts.
[3] Complete type see ordering code C*C.
[4] Complete type see ordering code CE*.

3-way compensator with mechanical maximum pressure protection (in combination with proportional throttle valve)

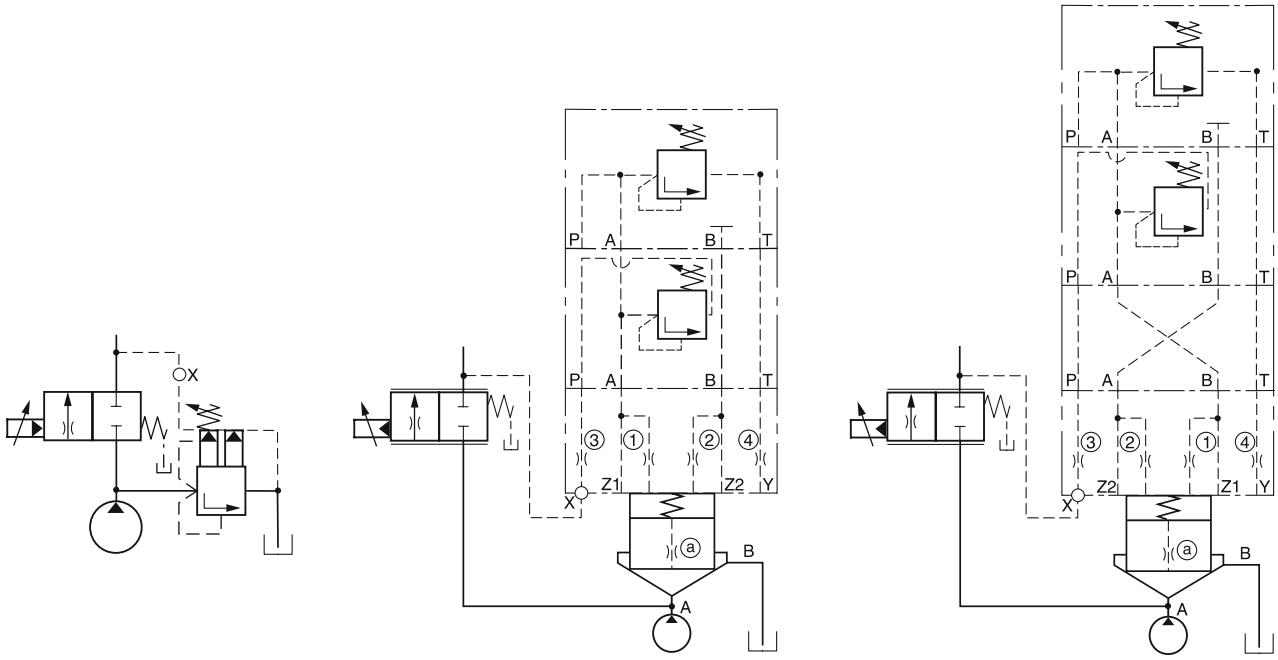

Flow A → B

Adaptor plates see chapter 12

Description	Type					
	NG16	NG25	NG32	NG40	NG50	NG63
Pressure valve [1]	R06Mxxx4x					
Preload valve [1]	DSBA100xZ07x					
Adaptor plate NG10-NG06 [2]	without				PADA1007/A-B/B-A	
Cover [3]	C016CA*	C025CA*	C032CA*	C040CA*	C050CA*	C063CA*
Cover orifice ①	M5xØ1.1	M5xØ1.3	M5xØ1.4	M5xØ1.5	M6xØ1.6	M6xØ1.7
Cover orifice ②	M5xØ00				M6xØ00	
Cover orifice ③	M5xØ99	M6xØ99			M8xØ99	
Cover orifice ④	M5xØ1.3	M6xØ1.5	M6xØ1.7	M6xØ1.8	M8xØ2.0	M8xØ2.2
Cartridge [4]	CE016C01*	CE025C01*	CE032C01*	CE040C01*	CE050C01*	CE063C01*
Poppet orifice ⓐ	1/16NPT x Ø0.9	1/16NPT x Ø1.1	1/16NPT x Ø1.2	1/16NPT x Ø1.3	1/16NPT x Ø1.4	1/16NPT x Ø1.5
Spring	1.6 bar, type S					
Bolt kit cover	BK414, 4x M8x40	BK391, 4x M12x50	BK415, 4x M16x55	BK416, 4x M20x70	BK417, 4x M20x75	BK418, 4x M30x100
Bolt kit pilot	TK1482					

Shown orifice Ø and springs are recommendations.
xxØ00 = closed bottom NG16 - NG50, plug NG63
xxØ99 = open

[1] Complete type see examples pilot valve.
[2] Included O-rings and mounting bolts.
[3] Complete type see ordering code C*C.
[4] Complete type see ordering code CE*.

3-way compensator with proportional pressure relief function (in combination with proportional throttle valve)

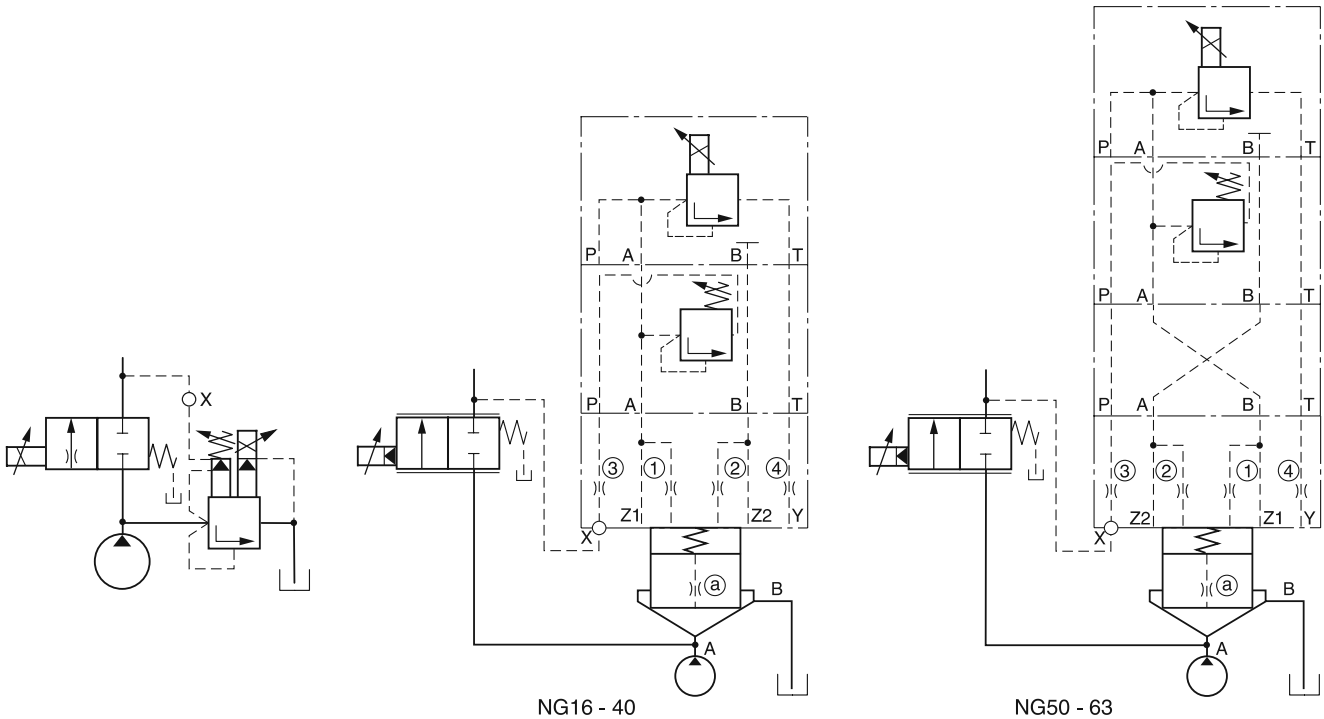

Flow A → B

Adaptor plates see chapter 12

Description	Type					
	NG16	NG25	NG32	NG40	NG50	NG63
Prop. press. valve [1]	RE06MxW2V1KW*					
Preload valve [2]	DSBA100xZ07x					
Adaptor plate NG10-NG06 [3]	without				PADA1007/A-B/B-A	
Cover [4]	C016CA*	C025CA*	C032CA*	C040CA*	C050CA*	C063CA*
Cover orifice ①	M5xØ1.1	M5xØ1.3	M5xØ1.4	M5xØ1.5	M6xØ1.6	M6xØ1.7
Cover orifice ②	M5xØ00				M6xØ00	
Cover orifice ③	M5xØ99	M6xØ99			M8xØ99	
Cover orifice ④	M5xØ1.3	M6xØ1.5	M6xØ1.7	M6xØ1.8	M8xØ2.0	M8xØ2.2
Cartridge [5]	CE016C01*	CE025C01*	CE032C01*	CE040C01*	CE050C01*	CE063C01*
Poppet orifice ⓐ	1/16NPT x Ø0.9	1/16NPT x Ø1.1	1/16NPT x Ø1.2	1/16NPT x Ø1.3	1/16NPT x Ø1.4	1/16NPT x Ø1.5
Spring	1.6 bar, type S					
Volume reduction	45036578	45036579	45036580	45036581	45036582	45036583
Bolt kit cover	BK414, 4x M8x40	BK391, 4x M12x50	BK415, 4x M16x55	BK416, 4x M20x70	BK417, 4x M20x75	BK418, 4x M30x100
Bolt kit pilot	TK1482					

Shown orifice Ø and springs are recommendations.
xxØ00 = closed bottom NG16 - NG50, plug NG63
xxØ99 = open

[1] Complete type see chapter "Pressure Valves", series RE06M*W.
[2] Complete type see pilot valves.
[3] Included O-rings and mounting bolts.
[4] Complete type see ordering code C*C.
[5] Complete type see ordering code CE*.

3-way compensator with mechanical max. pressure protection and electrical vent function, normally open (in combination with proportional throttle valve)

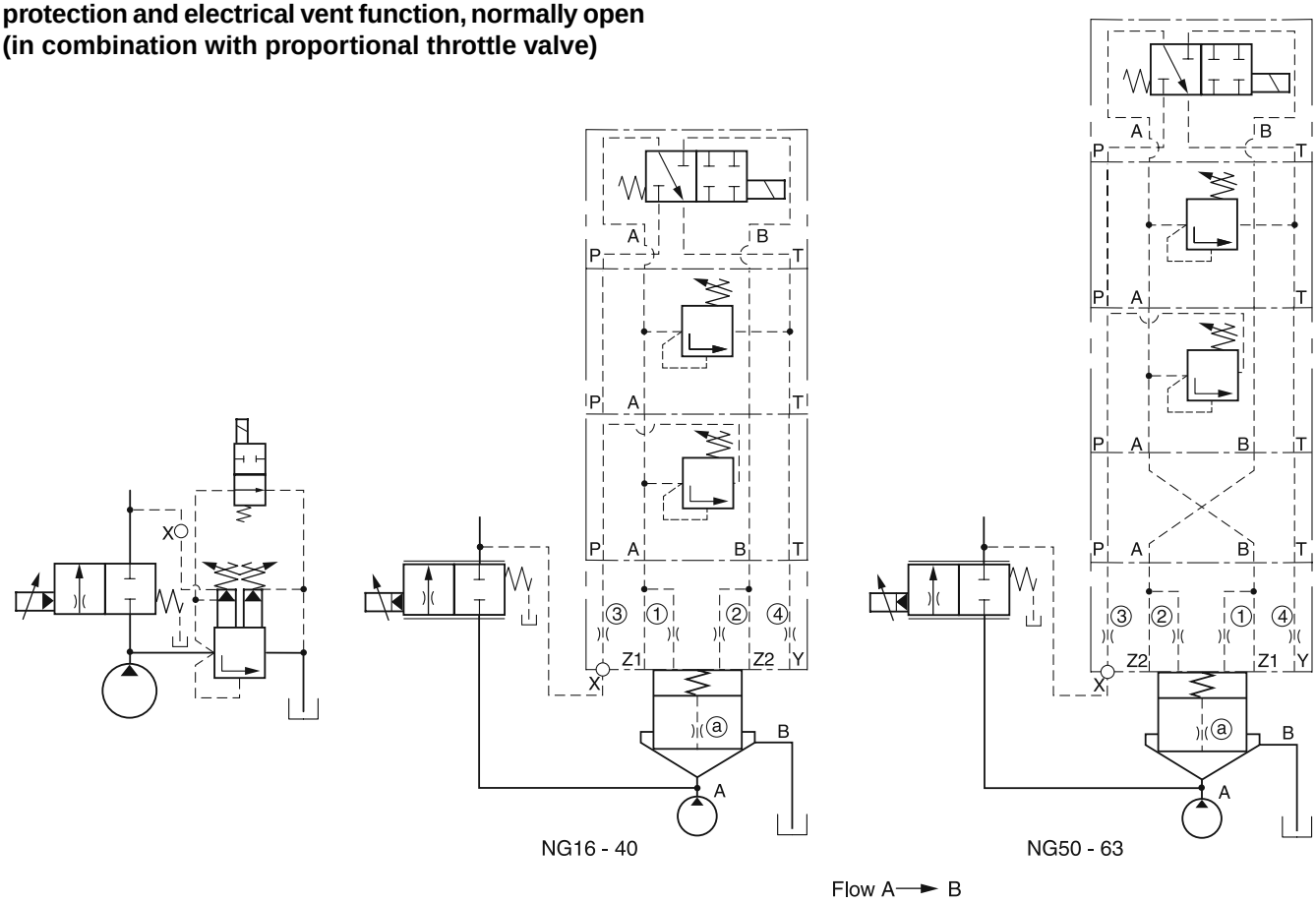

Adaptor plates see chapter 12

Description	Type					
	NG16	NG25	NG32	NG40	NG50	NG63
4/2 DC valve [1]	D1VW076K*					
Press. valve [2]	ZUDB1ATxZ07x					
Preload valve [2]	DSBA100xZ07x					
Adaptor plate NG10-NG06 [3]	without				PADA1007/A-B/B-A	
Cover [4]	C016CA*	C025CA*	C032CA*	C040CA*	C050CA*	C063CA*
Cover orifice ①	M5xØ1.1	M5xØ1.3	M5xØ1.4	M5xØ1.5	M6xØ1.6	M6xØ1.7
Cover orifice ②	M5xØ00				M6xØ00	
Cover orifice ③	M5xØ99	M6xØ99			M8xØ99	
Cover orifice ④	M5xØ1.3	M6xØ1.5	M6xØ1.7	M6xØ1.8	M8xØ2.0	M8xØ2.2
Cartridge [5]	CE016C01*	CE025C01*	CE032C01*	CE040C01*	CE050C01*	CE063C01*
Poppet orifice ⓐ	1/16NPT x Ø0.9	1/16NPT x Ø1.1	1/16NPT x Ø1.2	1/16NPT x Ø1.3	1/16NPT x Ø1.4	1/16NPT x Ø1.5
Spring	1.6 bar, type S					
Bolt kit cover	BK414, 4x M8x40	BK391, 4x M12x50	BK415, 4x M16x55	BK416, 4x M20x70	BK417, 4x M20x75	BK418, 4x M30x100
Bolt kit pilot	TK1473					

Shown orifice Ø and springs are recommendations.
xxØ00 = closed bottom NG16 - NG50, plug NG63
xxØ99 = open

[1] Complete type see chapter "Directional Control Valves", series D1VW.
[2] Complete type see pilot valves.
[3] Included O-rings and mounting bolts.
[4] Complete type see ordering code C*C.
[5] Complete type see ordering code CE*.

Examples pressure.INDD CM 16.04.15

3-way compensator with proportional pressure relief function and mechanical maximum pressure protection (in combination with proportional throttle valve)

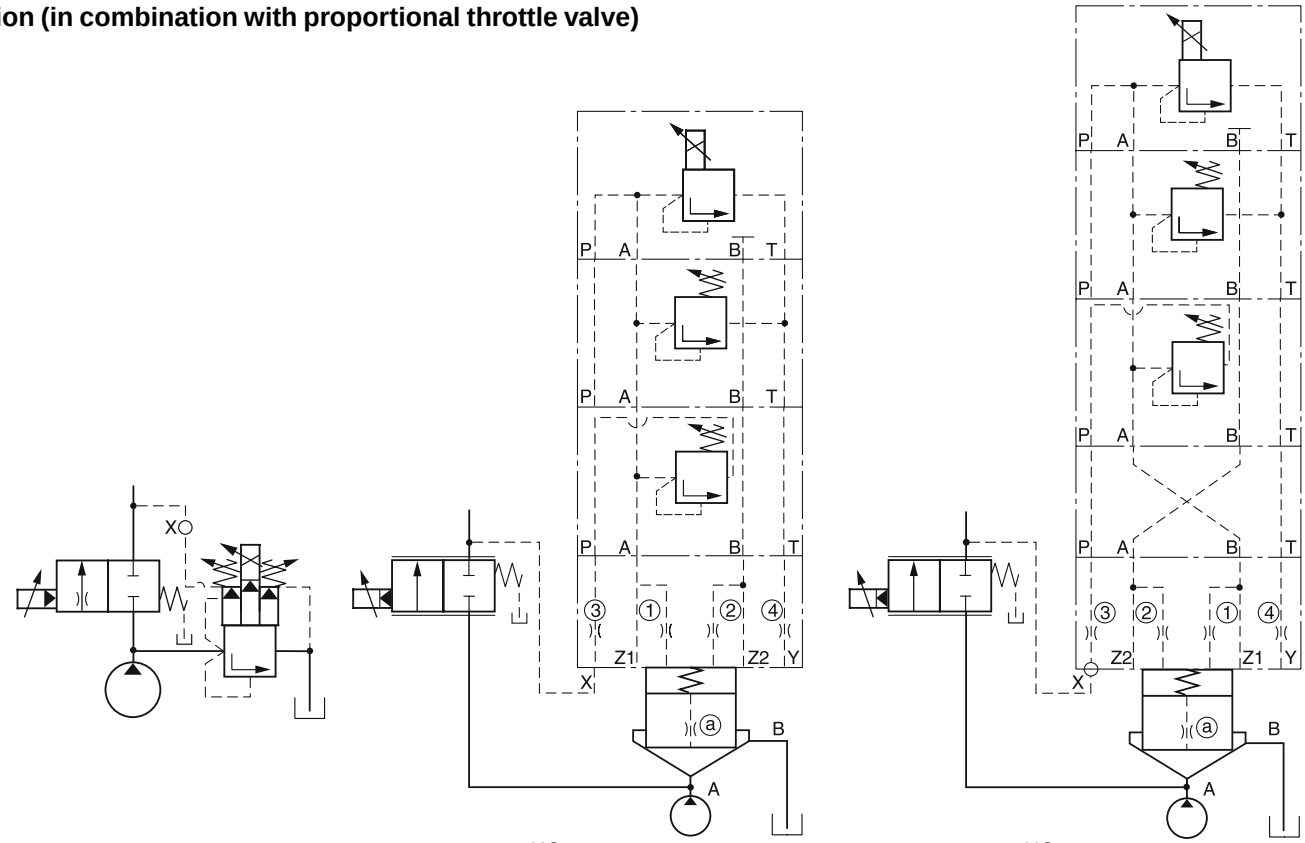

Flow A → B

Adaptor plates see chapter 12

Description	Type					
	NG16	NG25	NG32	NG40	NG50	NG63
Prop. press. valve [1]	RE06MxW2V1KW*					
Press. valve [2]	ZUDB1ATxZ07x					
Preload valve [2]	DSBA100xZ07x					
Adaptor plate NG10-NG06 [3]	without				PADA1007/A-B/B-A	
Cover [4]	C016CA*	C025CA*	C032CA*	C040CA*	C050CA*	C063CA*
Cover orifice ①	M5xØ1.1	M5xØ1.3	M5xØ1.4	M5xØ1.5	M6xØ1.6	M6xØ1.7
Cover orifice ②	M5xØ00				M6xØ00	
Cover orifice ③	M5xØ99	M6xØ99			M8xØ99	
Cover orifice ④	M5xØ1.3	M6xØ1.5	M6xØ1.7	M6xØ1.8	M8xØ2.0	M8xØ2.2
Cartridge [5]	CE016C01*	CE025C01*	CE032C01*	CE040C01*	CE050C01*	CE063C01*
Poppet orifice ⓐ	1/16NPT x Ø0.9	1/16NPT x Ø1.1	1/16NPT x Ø1.2	1/16NPT x Ø1.3	1/16NPT x Ø1.4	1/16NPT x Ø1.5
Spring	1.6 bar, type S					
Volume reduction	45036578	45036579	45036580	45036581	45036582	45036583
Bolt kit cover	BK414, 4x M8x40	BK391, 4x M12x50	BK415, 4x M16x55	BK416, 4x M20x70	BK417, 4x M20x75	BK418, 4x M30x100
Bolt kit pilot	TK1473					

Shown orifice Ø and springs are recommendations.
xxØ00 = closed bottom NG16 - NG50, plug NG63
xxØ99 = open

[1] Complete type see chapter "Pressure Valves", series RE06M*W.
[2] Complete type see pilot valves.
[3] Included O-rings and mounting bolts.
[4] Complete type see ordering code C*C.
[5] Complete type see ordering code CE*.

Check valves of the series C1DB consist of a slip-in valve, that is designed for a compact manifold block installation.

Features

- Cavity and mounting pattern according to ISO 7368
- 4 different springs
- 8 sizes NG16 to NG100

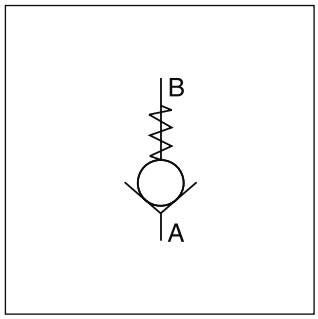

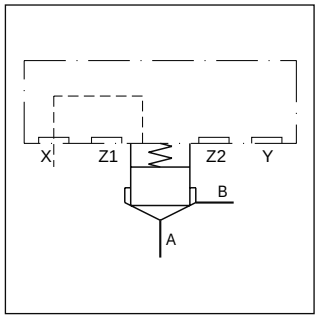

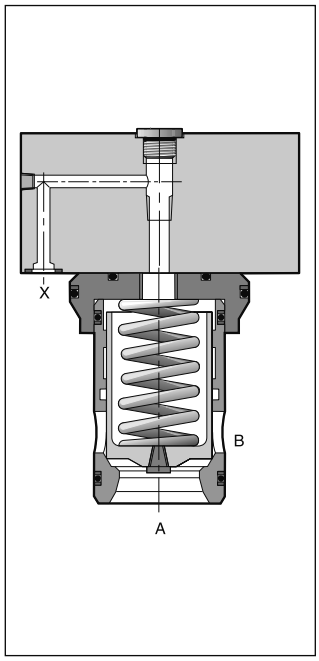

Ordering code

[ ]	–	**C1DB**	**101**	**E**	[ ]	/	**0**	[ ]	**99**	**00**
Seal		Check valve	Cover	Slip-in valve	Nominal size		Design series	Closing spring		

Code	Seal
omit	**NBR**
V	FPM

Code	Nominal size
16	**NG16**
25	**NG25**
32	**NG32**
40	**NG40**
50	**NG50**
63	**NG63**
80	NG80
100	NG100

Code	Spring
L	0.1 bar
N	0.5 bar
S	**1.6 bar**
T	2.5 bar
U	4.0 bar

Bold letters =
Short-term availability

Technical data

General									
Design		2-way cartridge valve, according to ISO 7368							
Nominal size		**NG16**	**NG25**	**NG32**	**NG40**	**NG50**	**NG63**	**NG80**	**NG100**
Actuation		hydraulical							
Mounting position		unrestricted							
Ambient temperature	[°C]	-20 ... +60							
$MTTF_D$ value	[years]	150							
Weight	[kg]	1.2	2.5	3.9	7	11.4	21.8	45	74
Hydraulics									
Flow direction		See symbols							
Fluid		Hydraulic oil according to DIN 51524							
Fluid temperature	[°C]	-20...+70 (NBR: -25...+70)							
Viscosity, permitted	[cSt] / [mm²/s]	20...400							
recommended	[cSt] / [mm²/s]	30...80							
Filtration		ISO 4406 (1999); 18/16/13							
Nominal pressure	[bar]	350							
Flow	[l/min]	250	450	900	1300	1800	3600	5250	8000
Opening pressure, spring	[bar]	L = 0.1; N = 0.5; S = 1.6; U = 4.0							

C1DB UK.INDD CM 16.04.15

Performance curves

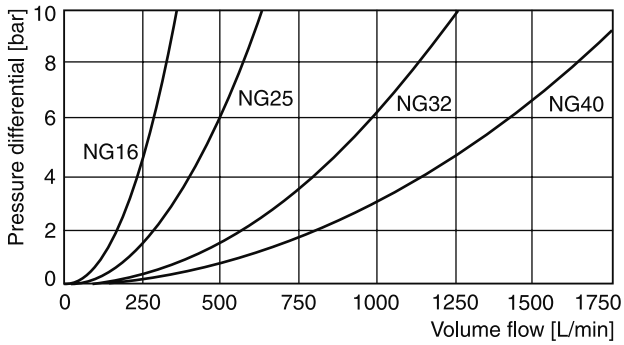

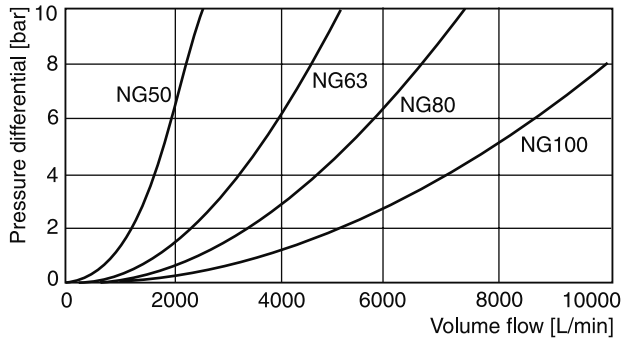

All characteristic curves measured with HLP46 at 50 °C.

Dimensions

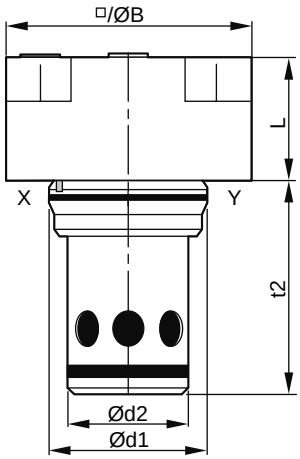

NG	L	B	d1	d2	t2
16	36	65	32	25	56
25	45	85	45	34	72
32	50	102	60	45	85
40	60	125	75	55	105
50	70	140	90	68	122
63	85	180	120	90	155
80	105	Ø 250	145	110	205
100	120	Ø 300	180	135	245

NG	Kit	ISO 4762-12.9	[Nm]	Kit NBR	Kit FPM	Orifice thread
16	BK441	4x M8x50	31.8	SK-CBE160	SK-CBE160V	1/16 NPT
25	BK391	4x M12x50	108	SK-CBE250	SK-CBE250V	1/16 NPT
32	BK415	4x M16x55	264	SK-CBE320	SK-CBE320V	1/16 NPT
40	BK416	4x M20x70	517	SK-CBE400	SK-CBE400V	1/8 NPT
50	BK417	4x M20x75	517	SK-CBE500	SK-CBE500V	1/8 NPT
63	BK418	4x M30x100	1775	SK-CBE630	SK-CBE630V	1/8 NPT
80	BK419	8x M24x120	890	SK-CBE630	SK-CBE630V	1/8 NPT
100	BK420	8x M30x140	1775	SK-CBE630	SK-CBE630V	1/8 NPT

Springs

Spring type	Ordering number							
	NG16	NG25	NG32	NG40	NG50	NG63	NG80	NG100
L (0.1 bar)	45051368	45051375	45051376	45051382	45051384	45051388	45051395	45051400
N (0.5 bar)	45051369	45051374	45051377	45051381	45051385	45051389	45051396	45051401
S (1.6 bar)	45051370	45051372	45051378	45051380	45051386	45051390	45051397	45051402
U (4.0 bar)	45051371	45051373	45051379	45051383	45051387	45051391	45051398	45051403

Hydraulically pilot operated check valves allow free flow from A to B. The counter-flow direction is blocked.

When pressure is applied to control port X, the ring chamber flow from B to A is released. The pilot control ratio is 6:1.

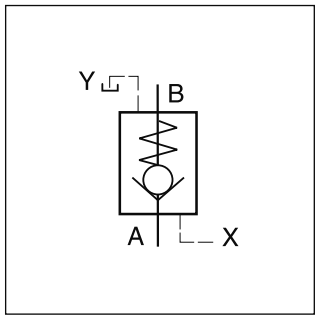

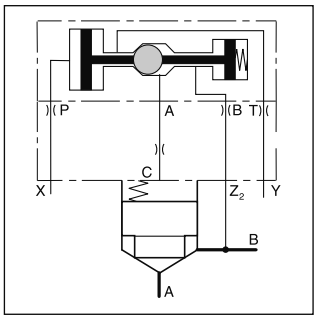

Function

When no pressure is applied to the X-port, the flow from B to A is blocked, because the pressure in B is also effective on top of the poppet.

Pressurizing the X-port relieves the area on top of the poppet to the drain port and allows flow from B to A. The seat design of the SVLB valve series provides leak-free separation of port A and B in the closed position.

Features

- Pilot operated check valve
- Cavity and mounting pattern acc. to ISO 7368
- Dampening poppet optional
- 5 sizes NG16 to NG50

8

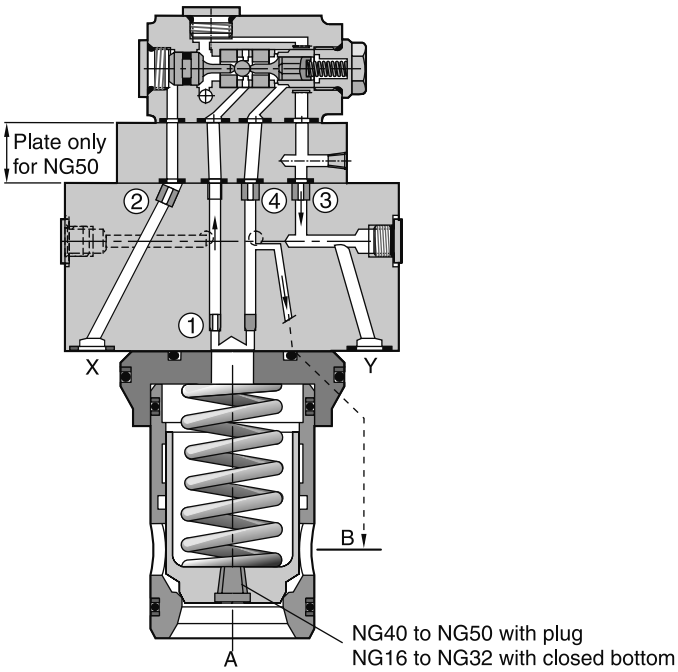

Ordering code

[ ]	SVL	B	10	[ ]	6	E	[ ]	[ ]	[ ]
Seal	**Hydr. operated check valve**	**Slip-in mounting**	**Design style acc. to ISO 7368**	**Poppet type**	**Pilot control ratio 6:1**	**Slip-in cartridge valve**	**Valve size**	**Closing spring**	**Design series** (not required for ordering)

Code	Seal
omit	**NBR**
V	FPM

Code	Poppet type
4	**04**
8 [1)]	08

Code	Spring
N	0.5 bar
S	**1.6 bar**
T	2.5 bar
U	4.0 bar

Code	Size
16	NG16
25	**NG25**
32	**NG32**
40	NG40
50	NG50

[1)] With damping nose.

Bold letters =
Short-term availability

Technical data

General						
Nominal size		**NG16**	**NG25**	**NG32**	**NG40**	**NG50**
Interface		Slip-in mounting acc. ISO 7368				
Mounting position		unrestricted				
Ambient temperature	[°C]	-20...+60				
$MTTF_D$ value	[years]	75				
Weight	[kg]	2.3	3.2	4.6	7.8	12.0
Hydraulics						
Max. operating pressure	[bar]	350				
Nominal flow	[l/min]	250	450	900	1300	1800
Fluid		Hydraulic oil according to DIN 51524				
Fluid temperature	[C°]	-20...+70 (NBR: -25...+70)				
Viscosity, permitted	[cSt] / [mm²/s]	20...400				
Viscosity, recommended	[cSt] / [mm²/s]	30...80				
Filtration		ISO 4406 (1999); 18/16/13				

8

Δp/Q flow curve

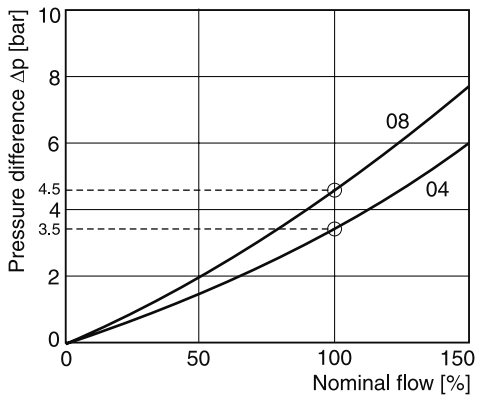

Poppet type 04, 08, without spring.

All characteristic curves measured with HLP46 at 50 °C.

Standard orifices

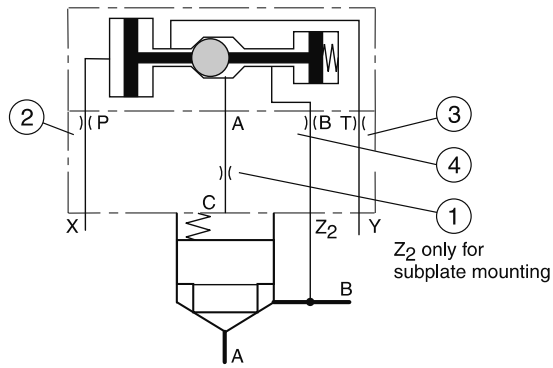

Pos.	E16	E25	E32	E40	E50
1	open (M5)	open (M5)	open (M5)	open (M5)	open (M6)
2	Ø1.2 (M5)	Ø1.2 (M6)	Ø1.2 (M6)	Ø1.2 (M6)	Ø1.2 (M8)
3	open (M5)	open (M6)	open (M6)	open (M6)	open (M8)
4	Ø1.0 (M5)	Ø1.2 (M5)	Ø1.3 (M5)	Ø1.5 (M6)	Ø2.0 (M6)

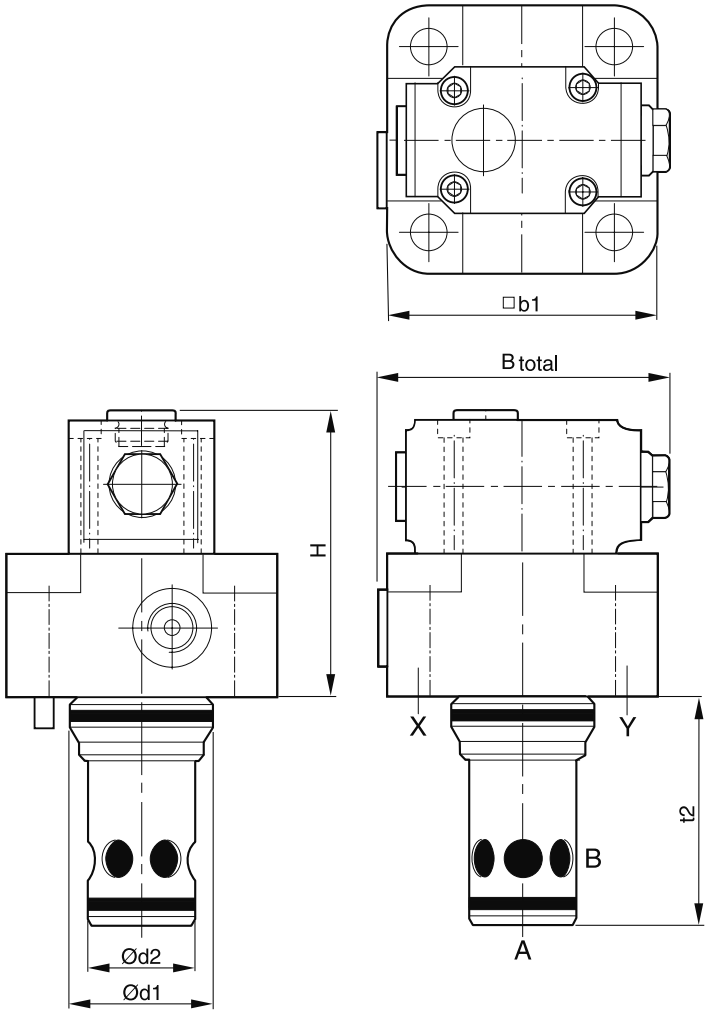

Size	16	25	32	40	50
H	84	88	93	103	138
b1	79*	85	102	125	140
$d1^{H7}$	32	45	60	75	90
$d2^{H7}$	25	34	45	55	68
$t2^{+0.1}$	56	72	85	105	122
Bges.	99	94	103	125	140

NG	Kit	ISO 4762-12.9	[Nm]	Kit NBR	Kit FPM
16	BK441	4x M8x50	31.8	SK-SVLB10E16	SK-SVLB10E16V
25	BK391	4x M12x50	108	SK-SVLB10E25	SK-SVLB10E25V
32	BK415	4x M16x55	264	SK-SVLB10E32	SK-SVLB10E32V
40	BK416	4x M20x70	517	SK-SVLB10E40	SK-SVLB10E40V
50	BK417	4x M20x75	517	SK-SVLB10E50	SK-SVLB10E50V

* Width 65 mm.

SVLB UK.INDD CM 17.02.15

2-way seat valve, flow A ⇒ B

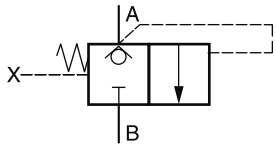

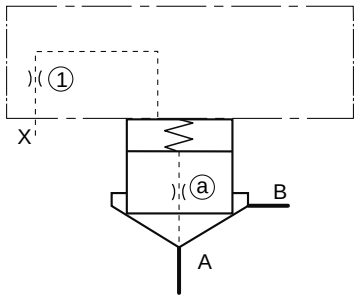

Description	Type							
	NG16	NG25	NG32	NG40	NG50	NG63	NG80	NG100
Cover [1]	C016AA*	C025AA*	C032AA*	C040AA*	C050AA*	C063AA*	C080AA*	C100AA*
Cover orifice ①	1/16xØ0.8	1/16xØ1.0	1/16xØ1.2	1/8xØ1.5	1/8xØ1.8	1/8xØ2.0	1/8xØ2.2	1/8xØ2.5
Cartridge [2]	CE016C01*	CE025C01*	CE032C01*	CE040C01*	CE050C01*	CE063C01*	CE080C01*	CE100C01*
Poppet orifice ⓐ	1/16xØ00							
Spring	1.6 bar, type S							
Bolt kit cover	BK414 4x M8x40	BK391 4x M12x50	BK415 4x M16x55	BK416 4x M20x70	BK417 4x M20x75	BK418 4x M30x100	BK419 8x M24x120	BK509 8x M30x130

Shown orifice Ø and springs are recommendations.
xxØ00 = closed bottom NG16 - NG50, plug NG63 - NG100
xxØ99 = open

[1] Complete type see ordering code C*A.
[2] Complete type see ordering code CE*.

8

2-way seat valve with stroke limiter, flow A ⇒ B

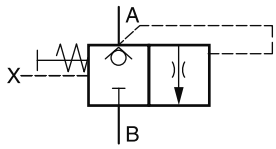

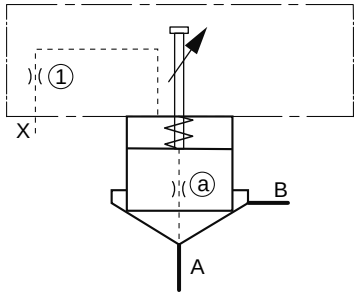

Description	Type							
	NG16	NG25	NG32	NG40	NG50	NG63	NG80	NG100
Cover [1]	C016B**	C025B**	C032B**	C040B**	C050B**	C063B**	C080B**	C100B**
Cover orifice ①	M6xØ0.8	M6xØ1.0	1/16xØ1.2	1/16xØ1.5	1/16xØ1.8	1/8xØ2.0	1/8xØ2.2	1/8xØ2.5
Cartridge [2]	CE016C01*	CE025C01*	CE032C01*	CE040C01*	CE050C01*	CE063C01*	CE080C01*	CE100C01*
Poppet orifice ⓐ	1/16xØ00							
Spring	1.6 bar, type S							
Bolt kit cover	BK414 4x M8x40	BK391 4x M12x50	BK415 4x M16x55	BK416 4x M20x70	BK417 4x M20x75	BK418 4x M30x100	BK419 8x M24x120	BK509 8x M30x130

Shown orifice Ø and springs are recommendations.
xxØ00 = closed bottom NG16 - NG50, plug NG63 - NG100
xxØ99 = open

[1] Complete type see ordering code C*B.
[2] Complete type see ordering code CE*.

2-way functions with dampening poppet, flow A ⇔ B

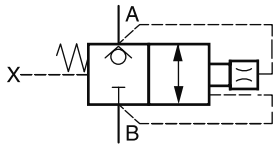

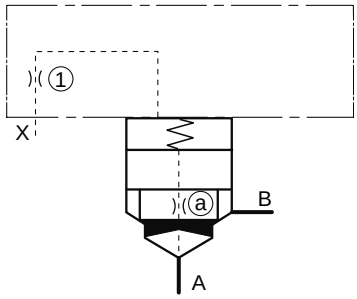

Description	Type							
	NG16	NG25	NG32	NG40	NG50	NG63	NG80	NG100
Cover [1]	C016AA*	C025AA*	C032AA*	C040AA*	C050AA*	C063AA*	C080AA*	C100AA*
Cover orifice ①	1/16xØ0.8	1/16xØ1.0	1/16xØ1.2	1/8xØ1.5	1/8xØ1.8	1/8xØ2.0	1/8xØ2.2	1/8xØ2.5
Cartridge [2]	CE016C08*	CE025C08*	CE032C08*	CE040C08*	CE050C08*	CE063C08*	CE080C08*	CE100C08*
Poppet orifice ⓐ	1/16xØ00							
Spring	1.6 bar, type S							
Bolt kit cover	BK414 4x M8x40	BK391 4x M12x50	BK415 4x M16x55	BK416 4x M20x70	BK417 4x M20x75	BK418 4x M30x100	BK419 8x M24x120	BK509 8x M30x130

Shown orifice Ø and springs are recommendations.
xxØ00 = plug
xxØ99 = open

[1] Complete type see ordering code C*A.
[2] Complete type see ordering code CE*.

2-way functions with stroke limiter and dampening poppet, flow A ⇔ B

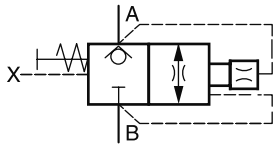

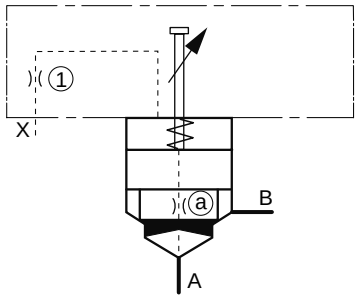

Description	Type							
	NG16	NG25	NG32	NG40	NG50	NG63	NG80	NG100
Cover [1]	C016B*	C025B*	C032B*	C040B*	C050B*	C063B*	C080B*	C100B*
Cover orifice ①	M6xØ0.8	M6xØ1.0	1/16xØ1.2	1/16xØ1.5	1/16xØ1.8	1/8xØ2.0	1/8xØ2.2	1/8xØ2.5
Cartridge [2]	CE016C08*	CE025C08*	CE032C08*	CE040C08*	CE050C08*	CE063C08*	CE080C08*	CE100C08*
Poppet orifice ⓐ	1/16xØ00							
Spring	1.6 bar, type S							
Bolt kit cover	BK414 4x M8x40	BK391 4x M12x50	BK415 4x M16x55	BK416 4x M20x70	BK417 4x M20x75	BK418 4x M30x100	BK419 8x M24x120	BK509 8x M30x130

Shown orifice Ø and springs are recommendations.
xxØ00 = plug
xxØ99 = open

[1] Complete type see ordering code C*B.
[2] Complete type see ordering code CE*.

2-way seat valve with pilot, normally closed, flow A ⇔ B

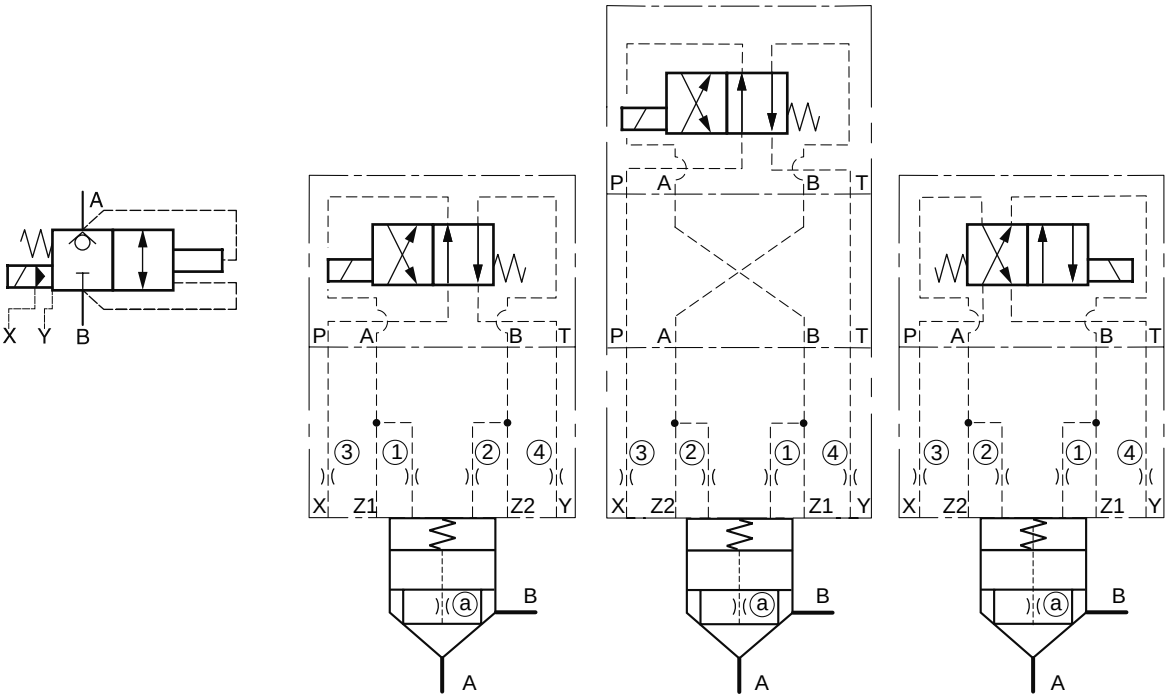

NG16 - 40 with pilot NG06

NG50 - 63 with pilot NG06

NG50 - 100 with pilot NG10

8

Description	Type									
	Pilot NG06						Pilot NG10			
	NG16	NG25	NG32	NG40	NG50	NG63	NG50	NG63	NG80	NG100
4/2-DC valve [1]	D1VW20B*						D3W20H*			
Adaptor plate [2]	without				PADA1007/A-B/B-A		without			
Cover [3]	C016CA*	C025CA*	C032CA*	C040CA*	C050CA*	C063CA*	C050CA*	C063CA*	C080CA*	C100CA*
Cover orifice ①	M5xØ0.8	M5xØ1.0	M5xØ1.2	M5xØ1.5	M6xØ1.8	M6xØ2.0	M6xØ1.8	M6xØ2.0	1/16xØ2.2	1/16xØ2.5
Cover orifice ②	M5xØ00				M6xØ00				1/16xØ00	
Cover orifice ③	M5xØ1.0	M6xØ1.2	M6xØ1.5	M6xØ1.8	M8xØ2.0	M8xØ2.2	M8xØ2.0	M8xØ2.2	M10x1xØ2.5	M10x1xØ3.0
Cover orifice ④	M5xØ99	M6xØ99			M8xØ99C				M10x1xØ99	
Cartridge [4]	CE016C04*	CE025C04*	CE032C04*	CE040C04*	CE050C04*	CE063C04*	CE050C04*	CE063C04*	CE080C04*	CE100C04*
Poppet orifice ⓐ	1/16NPTxØ00									
Spring	1.6 bar, type S									
Bolt kit cover	BK414 4x M8x40	BK391 4x M12x50	BK415 4x M16x55	BK416 4x M20x70	BK417 4x M20x75	BK418 4x M30x100	BK419 8x M24x120	BK509 8x M30x130	BK419 8x M24x120	BK420 8x M30x140
Bolt kit pilot	BK375 4x M5x30						BK385 4x M6x40			

Shown orifice Ø and springs are recommendations.
xxØ00 = closed bottom NG16 - NG50, plug NG63 - NG100
xxØ99 = open

1) Complete type see chapter "Directional Control Valves", series D1VW, D3W.
2) NG10-NG06 inclusive O-rings and mounting bolts.
3) Complete type see ordering code C*C.
4) Complete type see ordering code CE*.

Adaptor plates see chapter 12.

2-way seat valve with pilot and dampening poppet, normally closed, flow A ⇔ B

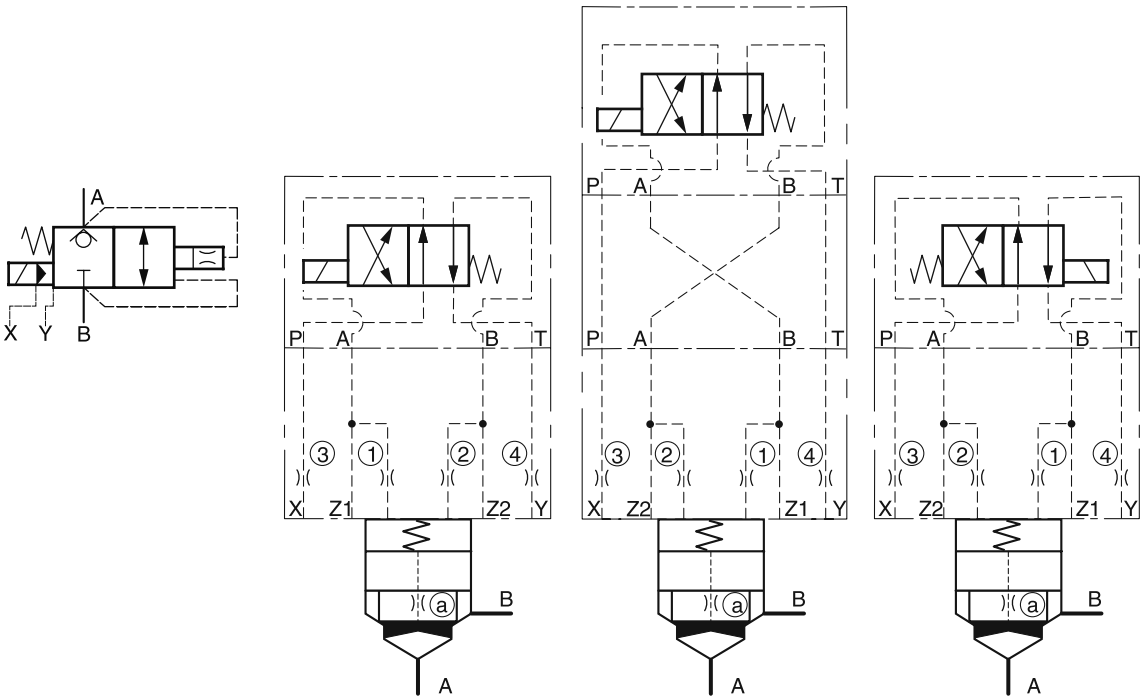

NG16 - 40 with pilot NG06

NG50 - 63 with pilot NG06

NG50 - 100 with pilot NG10

8

Description	Type									
	Pilot NG06						Pilot NG10			
	NG16	NG25	NG32	NG40	NG50	NG63	NG50	NG63	NG80	NG100
4/2-DC valve [1]	D1VW20B*						D3W20H*			
Adaptor plate [2]	without				PADA1007/A-B/B-A		without			
Cover [3]	C016CA*	C025CA*	C032CA*	C040CA*	C050CA*	C063CA*	C050CA*	C063CA*	C080CA*	C100CA*
Cover orifice ①	M5xØ0.8	M5xØ1.0	M5xØ1.2	M5xØ1.5	M6xØ1.8	M6xØ2.0	M6xØ1.8	M6xØ2.0	1/16xØ2.2	1/16xØ2.5
Cover orifice ②	M5xØ00				M6xØ00				1/16xØ00	
Cover orifice ③	M5xØ1.0	M6xØ1.2	M6xØ1.5	M6xØ1.8	M8xØ2.0	M8xØ2.2	M8xØ2.0	M8xØ2.2	M10x1xØ2.5	M10x1xØ3.0
Cover orifice ④	M5xØ99	M6xØ99			M8xØ99C				M10x1xØ99	
Cartridge [4]	CE016C08*	CE025C08*	CE032C08*	CE040C08*	CE050C08*	CE063C08*	CE050C08*	CE063C08*	CE080C08*	CE100C08*
Poppet orifice ⓐ	1/16NPTxØ00									
Spring	1.6 bar, type S									
Bolt kit cover	BK414 4x M8x40	BK391 4x M12x50	BK415 4x M16x55	BK416 4x M20x70	BK417 4x M20x75	BK418 4x M30x100	BK419 8x M24x120	BK509 8x M30x130	BK419 8x M24x120	BK420 8x M30x140
Bolt kit pilot	BK375 4x M5x30						BK385 4x M6x40			

Shown orifice Ø and springs are recommendations.
xxØ00 = plug
xxØ99 = open

[1] Complete type see chapter "Directional Control Valves", series D1VW, D3W.
[2] NG10-NG06 inclusive O-rings and mounting bolts.
[3] Complete type see ordering code C*C.
[4] Complete type see ordering code CE*.

Adaptor plates see chapter 12.

Check valve, flow A ⇒ B

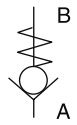

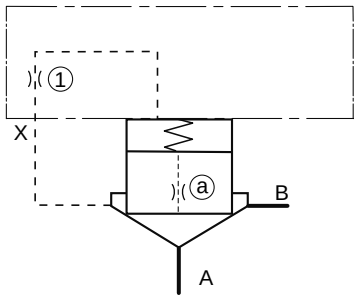

Description	Type							
	NG16	NG25	NG32	NG40	NG50	NG63	NG80	NG100
Cover [1]	C016AA*	C025AA*	C032AA*	C040AA*	C050AA*	C063AA*	C080AA*	C100AA*
Cover orifice 1	M5xØ99				M6xØ99		1/16xØ99	
Cartridge [2]	CE016C01*	CE025C01*	CE032C01*	CE040C01*	CE050C01*	CE063C01*	CE080C01*	CE100C01*
Poppet orifice a	1/16NPTxØ00							
Spring	1.6 bar, type S							
Bolt kit cover	BK414 4x M8x40	BK391 4x M12x50	BK415 4x M16x55	BK416 4x M20x70	BK417 4x M20x75	BK418 4x M30x100	BK419 8x M24x120	BK509 8x M30x130

Shown orifice Ø and springs are recommendations.
xxØ00 = closed bottom NG16 - NG50, plug NG63 - NG100
xxØ99 = open

[1] Complete type see ordering code C*A.
[2] Complete type see ordering code CE*.

8

The 2/2-way seat valves series C10C*E are equipped with an inductive switch to monitor the closed position. The poppet has a 60/40 area ratio (AA = 0.6 AC, AB = 0.4 AC) and is capable for flow in both directions.

The safety overlap of the poppet avoids opening of the valve before the signal of the inductive switch has changed.

For sizes NG80 and NG100 a proximity switch is used.

C10C3E

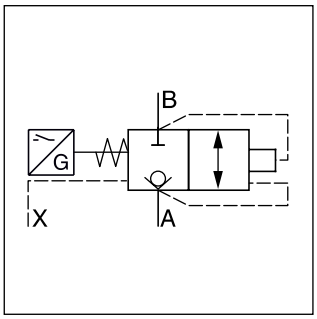

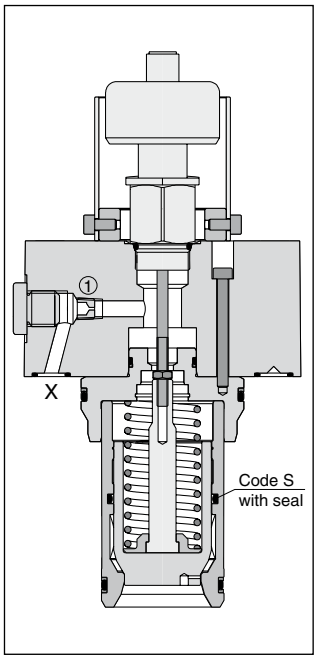

C10C1E

Features

- Cover to mount a directional control valve (on the side) for cover 3
- Cavity and mounting pattern acc. to ISO 7368
- Monitored closed position
- Inductive switch CE conform
- Optional with poppet sealing between pilot flow C and port B.
- 8 sizes, NG16 up to NG100

Ordering code

C	10	C		E									
2/2-way valve	Poppet shape 60/40	Ind. monitoring hydraulic operation	Cover	Slip-in cartridge ISO 7368	Nominal size	Poppet seal	Nominal opening pressure spring	1	2	3	4	Seal	Design series (not required for ordering)

Orifice

Code	Cover
1	without pilot valve interface
3 [1]	with pilot valve interface

Code	Nominal size
016	NG16
025	NG25
032	NG32
040	NG40
050	NG50
063	NG63
080	NG80
100	NG100

Code	Poppet seal
C	without
S [2]	with

Code	Nominal opening pressure spring
L	0.1 bar
N	0.5 bar
S	1.6 bar
T	2.5 bar
U	4.0 bar

Code	Seal
N	NBR
V	FPM

Code	Orifice
ohne	no orifice (2-4 cover 1)
00	Plug
99	open, without orifice

Cover 1

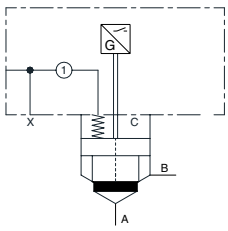

Cover 3

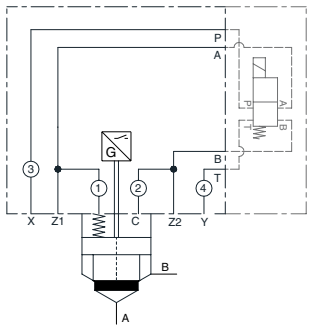

Please order female connector M12x1 separately (order no. 5004109)

[1] The DC valve is not included in the delivery.
We recommend the following pilot valves: D1VW020BN*W or D1VW020HN*W, depending on the required functionality and plug location.

[2] Only with spring S, T and U.

○ Orifices (see 'Accessories')

Technical data

General									
Design		2-way slip-in cartridge valves ISO 7368							
Size		**NG16**	**NG25**	**NG32**	**NG40**	**NG50**	**NG63**	**NG80**	**NG100**
Mounting position		unrestricted							
Operation		hydraulic							
Ambient temperature	[C°]	-20...+60							
$MTTF_D$ value	[years]	150							
Weight	[kg]	1.5	2.7	4.3	7.4	12	23	53	89
Hydraulic									
Max. operating pressure	[bar]	350							
Nominal flow Δp 5 bar	[l/min]	230	400	800	1250	1625	3400	5000	7500
Fluid		Hydraulic oil according to DIN 51524							
Fluid temperature	[C°]	-20...+70 (NBR: -25...+70)							
Viscosity, permitted	[cSt] / [mm²/s]	20...400							
recommended	[cSt] / [mm²/s]	30...80							
Filtration		ISO 4406 (1999); 18/16/13							
Control volume at max. stroke	[cm³]	2.03	6.45	12.21	20.32	39.40	94.56	950	1300
Control surface (surface C = 100 %) A/B	[%]	approx. 60 / 40 related on surface C							
Opening pressure									
flow direction A—>B	[bar]	Spring: L = 0.2; N = 0.9; S = 2.7; T = 4.0; U = 6.6							
flow direction B—>A	[bar]	Spring: L = 0.3; N = 1.3; S = 4.0; T = 6.3; U = 10.0							
Electrical (Inductive switch)		See position control							

Δp/Q performance curve

(without spring and poppet seal, C-chamber unloaded)

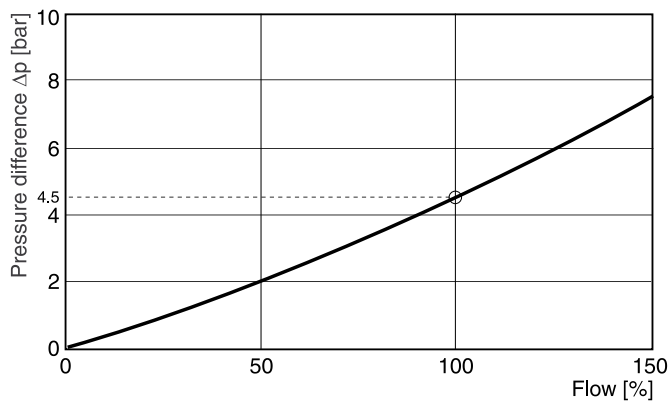

Characteristic curve measured with HLP46 at 50 °C.

Recommended orifice diameter

Cover	Orifice	NG16	NG25	NG32	NG40	NG50	NG63	NG80	NG100
C10C1E	No.: 1	1/16 NPT	1/16 NPT	1/16 NPT	1/8 NPT	1/8 NPT	1/8 NPT	1/8 NPT	1/8 NPT
C10C3E	No.: 1, 2, 3, 4	M5	M6	M6	M6	M8	M8	1/8 NPT	1/8 NPT
Inlet orifice		Ø 0.8	Ø 1.2	Ø 1.5	Ø 2.0	Ø 2.5	Ø 3.0	Ø 3.0	Ø 3.0

Depending on function, plugs must be used (code00).

Dimensions C10C1E

NG16 to NG63 [1)]

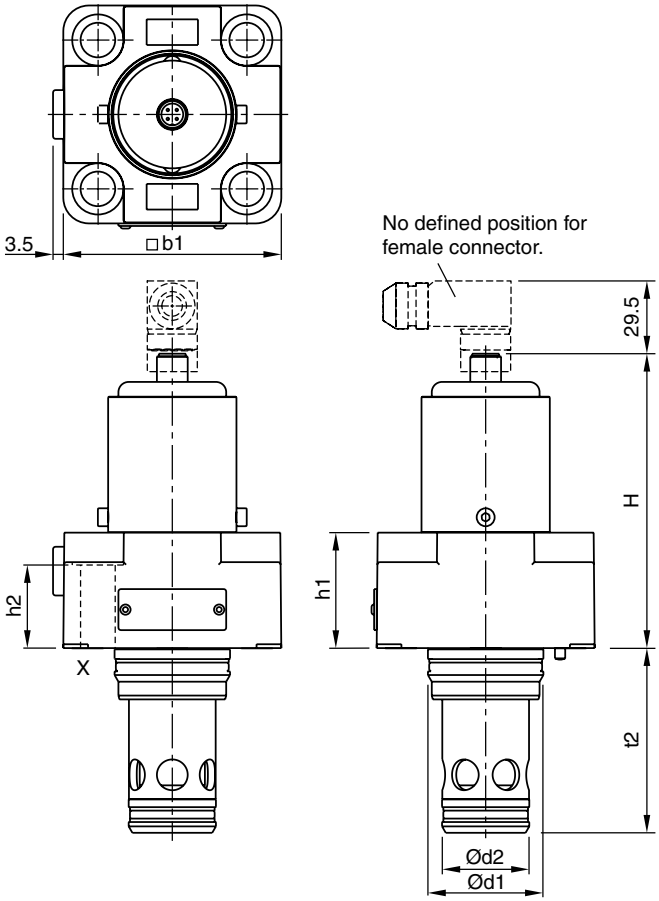

Cavity and mounting pattern acc. to ISO 7368

NG	H	h	h2	b1	d1	d2	t +0.1
16	107	36	28	65	32	25	56
25	116	45	32.5	85	45	34	72
32	122	50	32	102	60	45	85
40	131	60	40	125	75	55	105
50	141	70	45	140	90	68	122
63	156	85	55	180	120	90	155
80	195	105	80	250	145	110	205
100	210	120	89	300	180	135	245

NG80 to NG100 [1)]

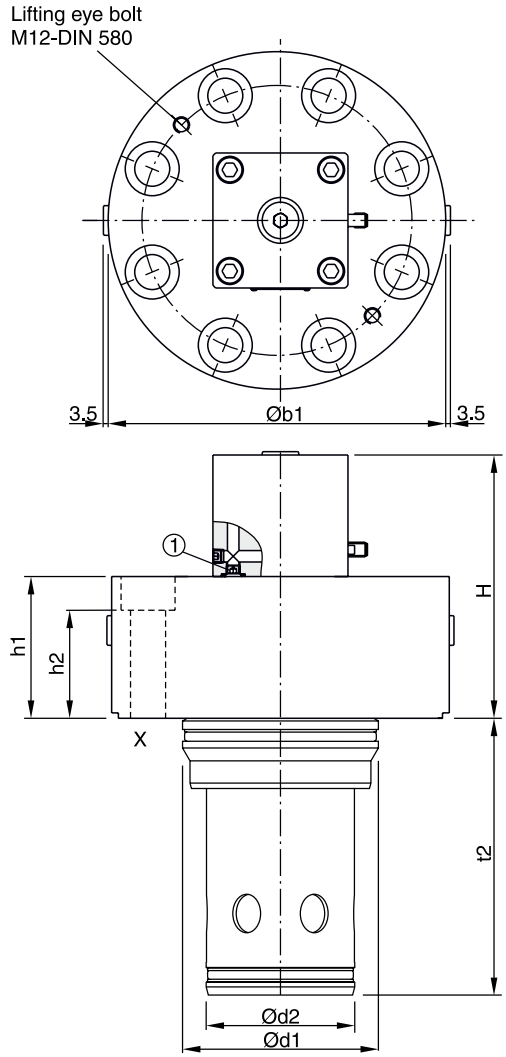

The space necessary to remove the M12x1 female connector is at least 22 mm.

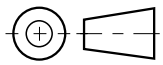

Seal and bolt kits

Nominal size		16	25	32	40	50	63	80	100
Seal kit	FPM	SK-C10C1E16V	SK-C10C1E25V	SK-C10C1E32V	SK-C10C1E40V	SK-C10C1E50V	SK-C10C1E60V	SK-C10C1E80V	SK-C10C1E100V
	NBR	SK-C10C1E16N	SK-C10C1E25N	SK-C10C1E32N	SK-C10C1E40N	SK-C10C1E50N	SK-C10C1E60N	SK-C10C1E80N	SK-C10C1E100N
Bolt kit [ISO 4762-12.9]		BK414 4x M8x40	BK391 4x M12x50	BK415 4x M16x55	BK416 4x M20x70	BK527 4x M20x80	BK418 4x M30x100	BK419 8x M24x120	BK420 8x M30x140
Recommended torque [Nm]		31.8	108	264	517	517	1775	890	1775

Attention!
The switch may only be adjusted by the valve manufacturer. The exchange of individual modules is not permitted.

[1)] Please order female connector M12x1 separately (see accessories directional control valves, female connector M12x1 (order no.: 5004109).

C10 UK.INDD CM 19.11.15

Dimensions C10C3E

NG16 to NG50 [1]
Pilot valve interface NG06.

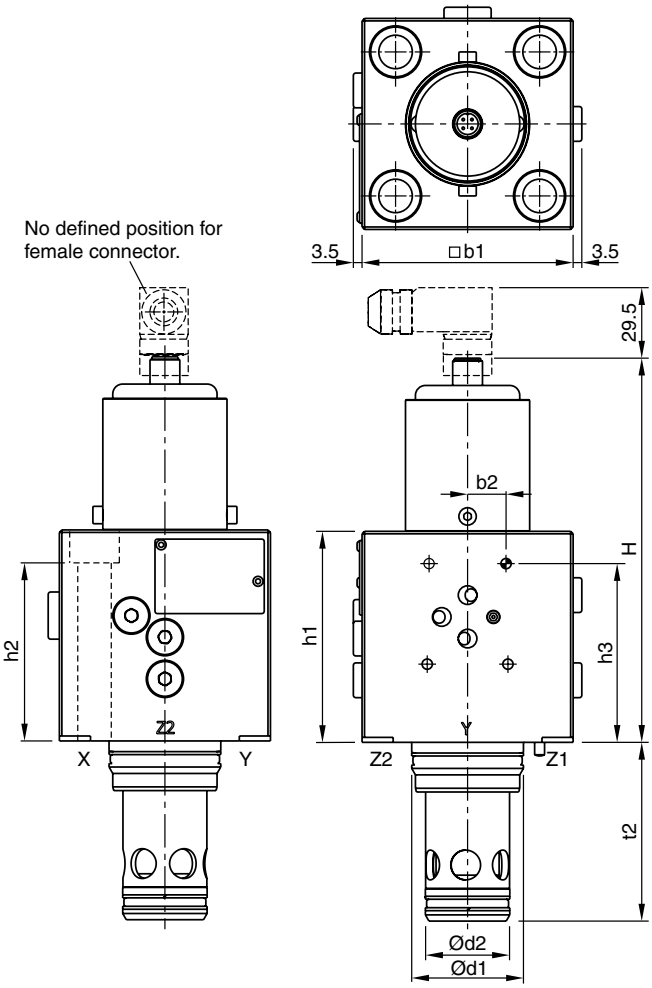

Cavity and mounting pattern acc. to ISO 7368

NG63 [1]
Pilot valve interface NG10.

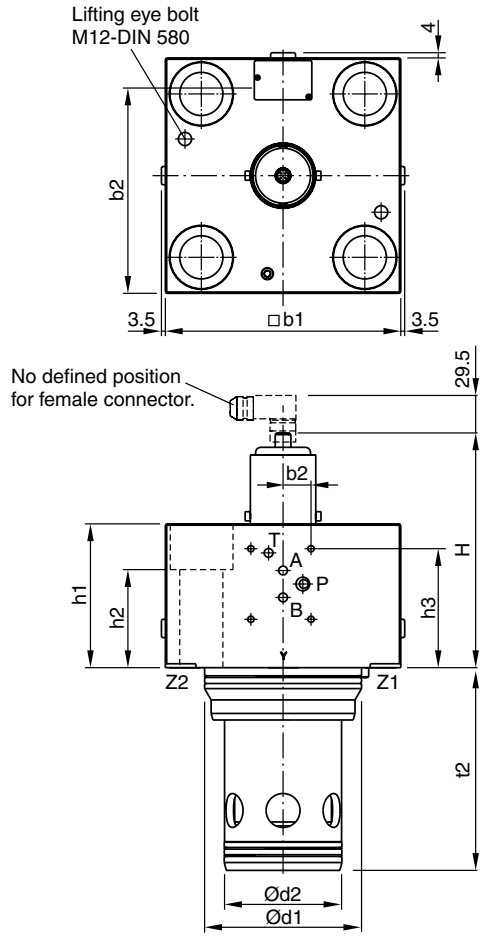

Cavity and mounting pattern acc. to ISO 7368

NG	H	h1	h2	h3	b1	b2	d1	d2	t2
16	156	85	76	72	65	15.5	31	25	56
25	156	85	70	72	85	15.5	45	34	72
32	156	85	56	72	102	15.5	60	45	85
40	156	85	50	72	125	15.5	75	55	105
50	156	85	60	72	140	15.5	90	68	122
63	181	110	75	91	180	21.5	120	90	155

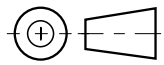

The space necessary to remove the M12x1 female connector is at least 22 mm.

Seal and bolt kits

Nominal size		16	25	32	40	50	63
Seal kit	FPM	SK-C10C3E16V	SK-C10C3E25V	SK-C10C3E32V	SK-C10C3E40V	SK-C10C3E50V	SK-C10C3E63V
	NBR	SK-C10C3E16N	SK-C10C3E25N	SK-C10C3E32N	SK-C10C3E40N	SK-C10C3E50N	SK-C10C3E63N
Bolt kit [ISO 4762-12.9]		BK533 4x M8x90	BK532 4x M12x90	BK526 4x M16x80	BK527 4x M20x80	BK534 4x M20x90	BK536 4x M30x120
Recommended torque ± 15%	[Nm]	31.8	108	264	517	517	1775

Attention!
The switch may only be adjusted by the valve manufacturer. The exchange of individual modules is not permitted.

[1] Please order female connector M12x1 separately (see accessories directional control valves, female connector M12x1 (order no.: 5004109).

C10 UK.INDD CM 19.11.15

Dimensions C10C3E

NG80 to NG100 [1)]
Pilot valve interface NG10.

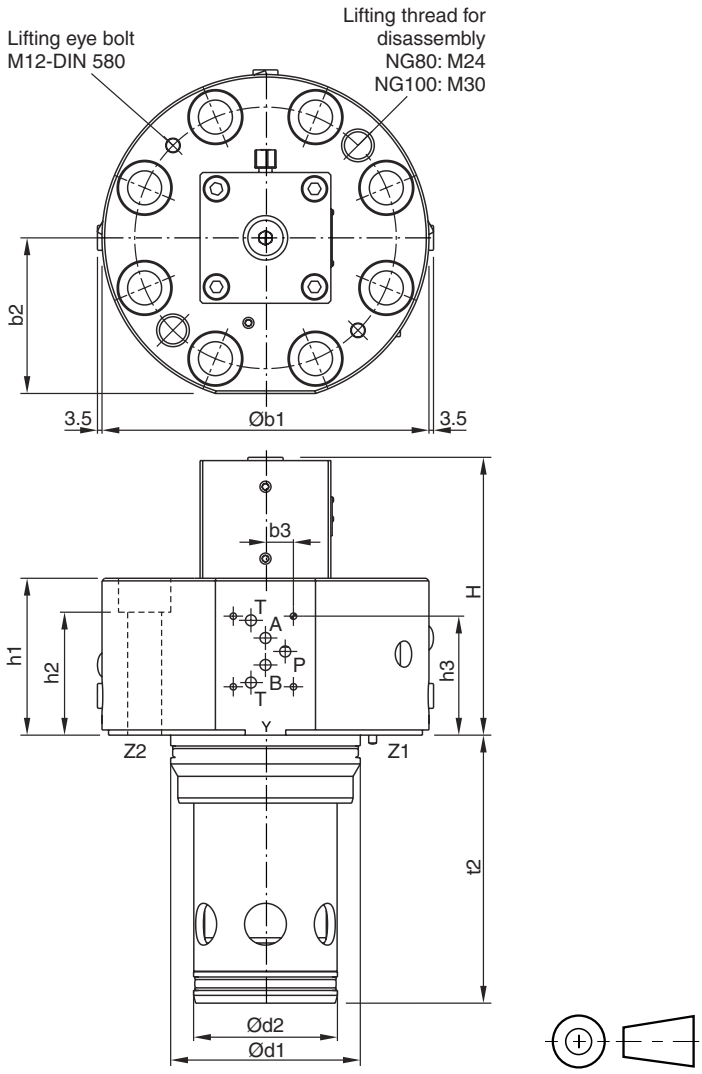

NG	H	h1	h2	h3	b1	b2	b3	d1	d2	t2
80	212.5	120	94	91	250	119	21.5	145	110	205
100	212.5	120	85	91	300	144	21.5	180	135	245

Seal and bolt kits

Nominal size		80	100
Seal kit	FPM	SK-C10D-C12E800V	SK-C10D-C12E1000V
	NBR	SK-C10D-C12E800N	SK-C10D-C12E1000N
Bolt kit [ISO 4762-12.9]		BK535 8x M24x130	BK531 8x M30x150
Recommended torque ± 15%	[Nm]	890	1775

Attention!
The switch may only be adjusted by the valve manufacturer. The exchange of individual modules is not permitted.

[1)] Please order female connector M12x1 separately (see accessories directional control valves, female connector M12x1 (order no.: 5004109).

C10 UK.INDD CM 19.11.15

Electrical characteristics of position control M12x1 as per IEC 61076-2-101, NG16 to NG63

Supply voltage	[VDC]	24
Tolernace supply voltage	[%]	±20
Ripple supply voltage	[%]	≤10
Polarity protection	[V]	300
Current consumption without load	[mA]	≤20
Switching hysteresis	[mm]	<0.06
Max. output current per channel, ohmic	[mA]	250
Ambient temperature	[°C]	-20 … +60
Protection		IP65 acc. EN 60529
CE conform [1)]		EN 61000-4-2 / EN 61000-4-4 / EN 61000-4-6 1) / ENV 50140 / ENV 50204
Min. distance to next AC solenoid	[m]	0.1
Interface		M12x1 to IEC 61076-2-101

M12 pin assignment

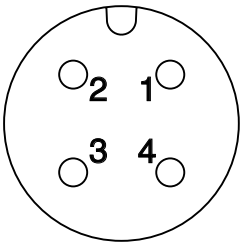

1 + U_S 19.2...28.8 V
2 Out B: normally open
3 0V
4 Out A: normally closed

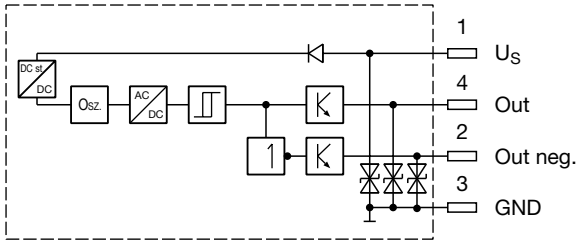

Outputs: Open collector

8

Please order plug M12x1 separately (see accessories directional control valves, plug M12x1; order no.: 5004109)

[1)] Only guaranted with screened cable and female connector

Electrical characteristics of position control M12x1 as per IEC 61076-2-101, NG80 to NG100

Protection class		IP65 in accordance with EN 60529 (with correctly mounted plug-in connector)
Ambient temperature	[°C]	0...+50
Supply voltage U_S / ripple	[V]	10...30 / 10 %
Current consumption without load	[mA]	≤ 10
Max. output current per channel, ohmic	[mA]	200
Min. output load per channel, ohmic	[kOhm]	100
Max. output drop at 0.2 A	[V]	≤ 2
EMC		EN61000-6-4 / EN61000-6-2
Min. distance to next AC solenoid	[m]	>0.1
Interface		M12x1
Wiring min.	[mm²]	3 x 0.14 braid shield recommended
Wiring length max.	[m]	50 recommended

M12 pin assignment

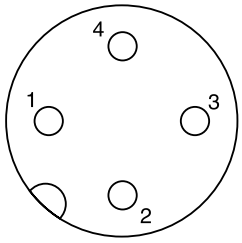

1 + U_S 10...30 V
2 Out A: not connected
3 0V
4 Out A: normally closed

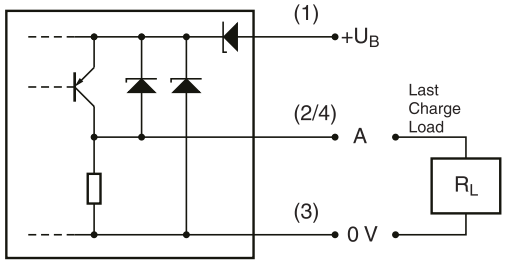

8

Definition

Start position monitored:

The switching point of the inductive switch is within the overlap of the poppet.

After the signal of the inductive switch has changed, the poppet leaves the safety overlapping position.

Please order plug M12x1 separately. Straight plug recommended – no defined position possible for angled plug.

The series of active pilot operated 2/2-way throttle valves TDW enables to open and close the main poppet solely by pilot pressure, independent of pressure build-up in the main ports A and B.

The main poppet is designed hollow and mostly pressure balanced. The operation is accomplished via minimal control surfaces resulting in low pilot oil demand and fast switching operations.

TDW is supplied as one unit to ensure easy installation – sleeve and body are screwed together. Additionally, the lower recess in the standardized mounting cavity is no longer required, providing the possibility to minimize pressure losses in the manifold block.

Features

- Active pilot operated 2/2-way cartridge valves
- Cavity and mounting pattern according to ISO 7368 (except for size NG125)
- Flow direction B to A and A to B
- 8 sizes NG25 up to NG125
- Position monitoring optional
- Stroke limiter optional

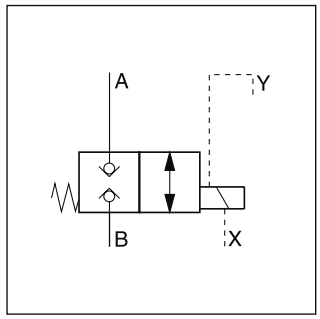

TDW032

Function symbols

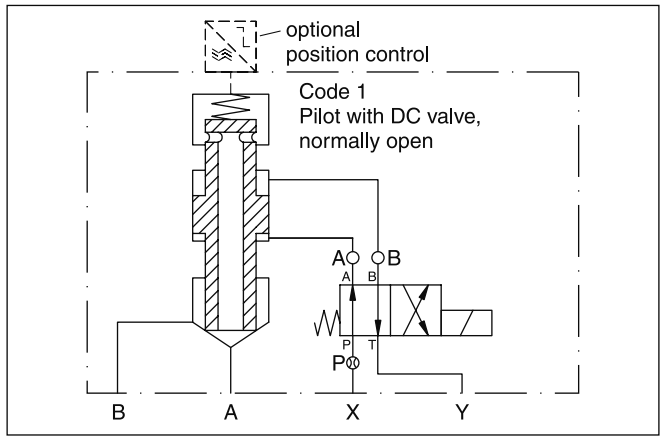

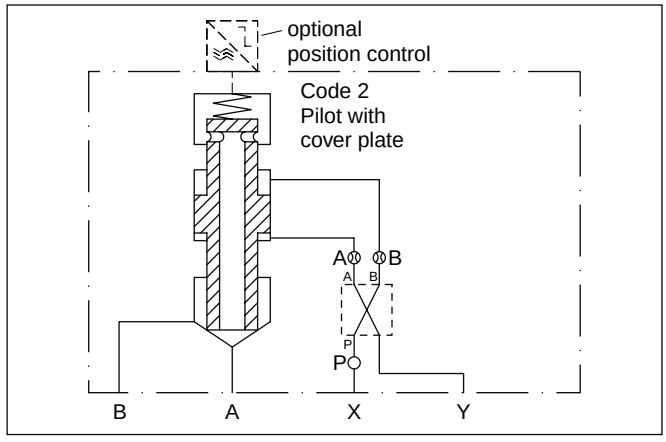

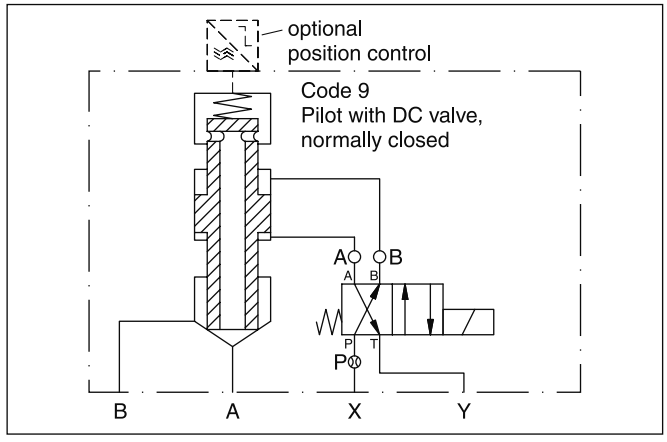

TDW040

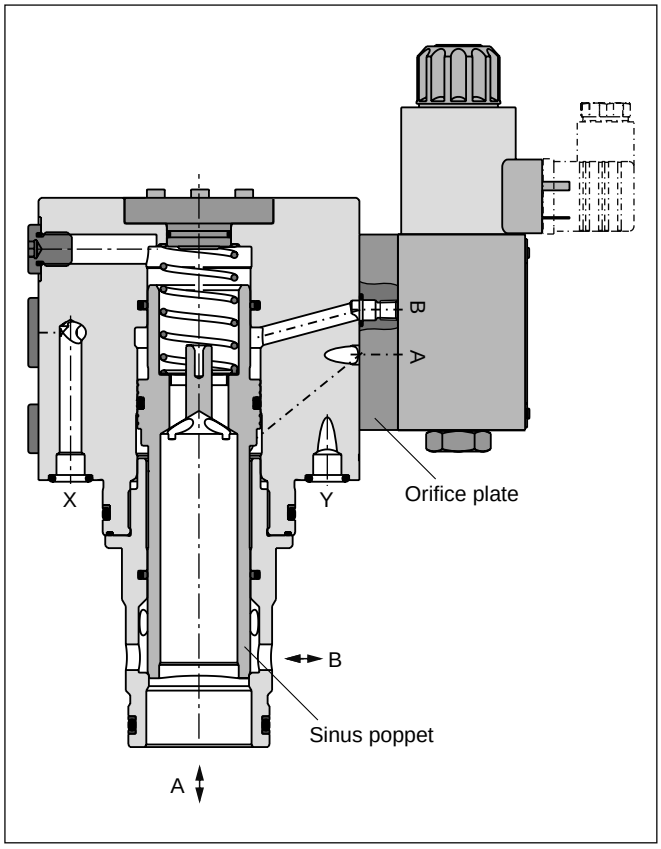

TDW		E	W		9	C	2	N			J	W				
2/2-way cartridge valve DC pilot	**Nominal size**	**Slip-in cartridge**	**Design**	**Sinus poppet**	**Nominal flow 100 %**	**Flow direction B → A A → B**	**Pilot oil** (supply external, drain external)	**Seal NBR**	**Position control**	**Pilot direct operated**	**Solenoid voltage DC valve 24 V =**	Omit for valves without DC valve **Connector as per EN175 301-803**	**Options DC valve**	P A B **Recommended orifice**		

Code	Nominal size
025	NG25
032	NG32
040	NG40
050	NG50
063	NG63
080	NG80
100	NG100
125	NG125

Code	Poppet shape
1 [1]	1:1 standard
8 [2]	with overlap

Code	Position control
0	w/o position control
2 [3]	Stroke limiter
8	Start position monitored

Code	Pilot
1	with DC valve, normally open
2	with cover plate X = closing Y = opening
9	with DC valve, normally closed

Pilot with DC valve	
Code [4]	Nominal size
129999	NG25, NG32
159999	NG40
189999	NG50
209999	NG63
259999	NG80
309999	NG100
359999	NG125
Pilot with cover plate	
Code	Nominal size
991212	NG25, NG32
991515	NG40
991818	NG50
992020	NG63
992525	NG80
993030	NG100
993535	NG125

Code	Options
0	Standard
T	without manual override

8

[1] Not for start position monitored, Code 8.
[2] Only in combination with start position monitored, code 8).
[3] Only for NG25 to NG63.
[4] Example code 129999: 12 = dia. 1.2 mm, 99 = without orifice.

General									
Design		2-way slip-in cartridge valve according to ISO 7368 (except for size NG125)							
Nominal size	DIN	**NG25**	**NG32**	**NG40**	**NG50**	**NG63**	**NG80**	**NG100**	**NG125**
Mounting position		unrestricted							
Ambient temperature	[°C]	-20...+60							
$MTTF_D$ value	[years]	75							
Weight	[kg]	8	10	12	23	49	102	154	193
Hydraulic									
Max. operating pressure	[bar]	Ports A, B, X up to 350, port Y: max. 210 (350 bar with cover plate)							
Fluid		Hydraulic oil according to DIN 51524							
Fluid temperature	[°C]	-25...+70							
Viscosity permitted	[cSt] / [mm²/s]	20...400							
Viscosity recommended	[cSt] / [mm²/s]	30...80							
Filtration		ISO 4406 (1999); 18/16/13							
Nominal flow at Δp = 5 bar	[l/min]	420	850	1500	1900	3600	4500	8000	11500
Recommended max. flow	[l/min]	800	2000	3000	4500	8000	13000	20000	29000
Flow direction		B to A / A to B							
Pilot pressure	[bar]	must be as high as system pressure							
Overlap (for poppet code 8)	[mm]	3.7	3.7	3.7	3.7	3.7	3.7	3.7	3.7
Electrical characteristics									
Duty ratio		100 % ED; CAUTION: coil temperature up to 150 °C possible							
Protection class		IP 65 in accordance with EN 60529 (with correctly mounted plug-in connector)							
	Code	J							
Supply voltage	[V]	24 V =							
Tolerance supply voltage	[%]	±10							
Current consumption hold	[A]	1.29							
Current consumption in rush	[A]	1.29							
Power consumption hold		31 W							
Power consumption in rush		31 W							
Solenoid connection		Connector as per EN 175301-803, solenoid identification as per ISO 9461 (code W).							
Wiring min.	[mm²]	3 x 1.5 recommended							
Wiring length max.	[m]	50 recommended							

8

With electrical connections the protective conductor (PE ⏚) must be connected according to the relevant regulations.

p/Q Performance curves (sinus poppet code 1 and 8)

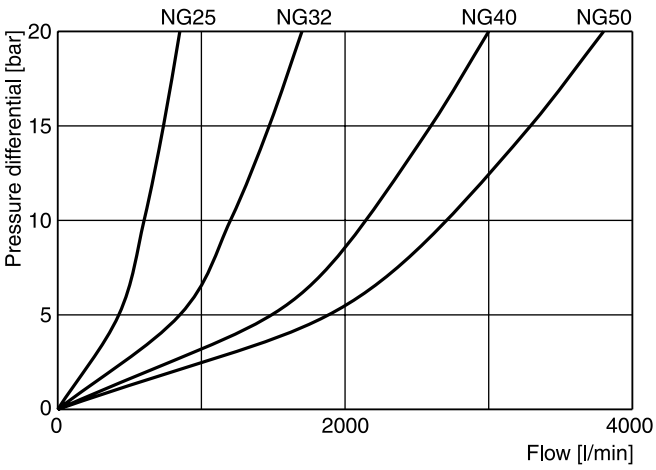

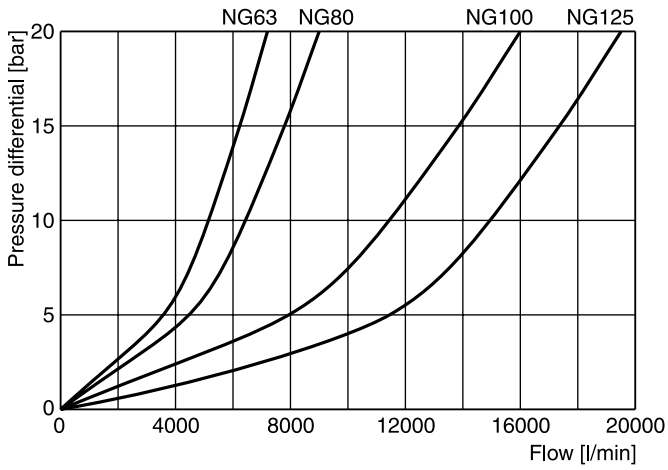

All characteristic curves measured with HLP46 at 50 °C.

Electrical characteristics of position control M12x1 as per IEC 61076-2-101, NG25 to NG63

Protection class		IP65 in accordance with EN 60529 (with correctly mounted plug-in connector)
Ambient temperature	[°C]	0...+60
Supply voltage U_S / ripple	[V]	18...42 / 10 %
Current consumption without load	[mA]	≤ 30
Max. output current per channel, ohmic	[mA]	400
Min. output load per channel, ohmic	[kOhm]	100
Max. output drop at 0.2 A	[V]	≤ 1.1
Max. output drop at 0.4 A	[V]	≤ 1.6
EMC		EN50081-1 / EN50082-2
Max. tolerance ambient field strength	[A/m]	<1200
Min. distance to next AC solenoid	[m]	>0.1
Interface		M12x1
Wiring min.	[mm²]	5 x 0.25 braid shield recommended
Wiring length max.	[m]	50 recommended

M12 pin assignment

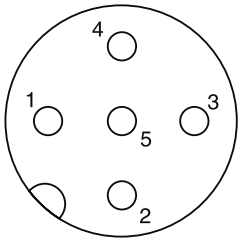

1 + U_S 18...42 V
2 Out B: normally open
3 0 V
4 Out A: normally closed
5 Earth ground

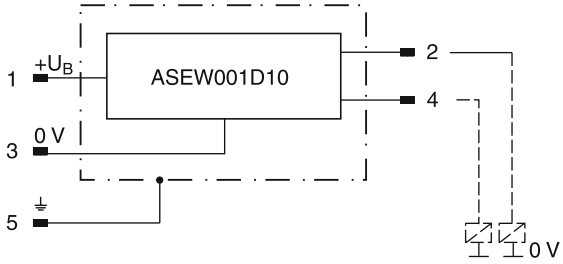

Electrical characteristics of position control M12x1 as per IEC 61076-2-101, NG80 to NG125

Protection class		IP65 in accordance with EN 60529 (with correctly mounted plug-in connector)
Ambient temperature	[°C]	0...+60
Supply voltage U_S / ripple	[V]	10...30 / 10 %
Current consumption without load	[mA]	≤ 10
Max. output current per channel, ohmic	[mA]	200
Min. output load per channel, ohmic	[kOhm]	100
Max. output drop at 0.2 A	[V]	≤ 2
EMC		EN61000-6-4 / EN61000-6-2
Min. distance to next AC solenoid	[m]	>0.1
Interface		M12x1
Wiring min.	[mm²]	3 x 0.14 braid shield recommended
Wiring length max.	[m]	50 recommended

8

M12 pin assignment

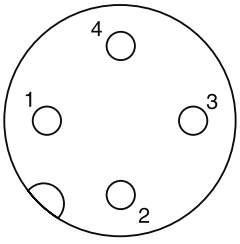

1 + U_S 10...30 V
2 Out A: not connected
3 0 V
4 Out A: normally closed

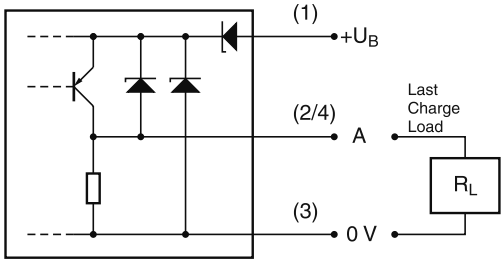

Control surfaces

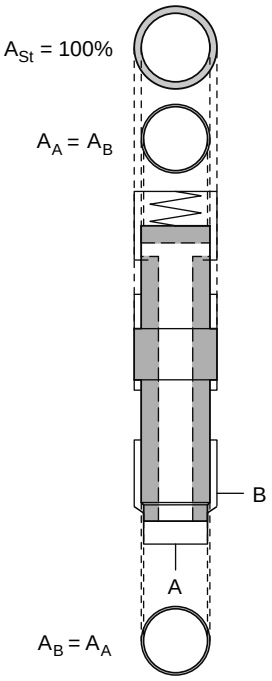

NG	Pilot oil volume for full stroke [cm³]	A_{ST} [%]	Standard poppet 1 A_B / A_{ST} [%]	Overlapped poppet 8 A_B / A_{ST} [%]
25	4.7	100	0	10.6
32	5.3	100	0	10.9
40	8.3	100	0	11.2
50	12.9	100	0	11.5
63	18.9	100	0	11.7
80	28.5	100	0	11.8
100	35.3	100	0	12.0
125 [1)]	–	–	–	–

[1)] On request

The 1:1 standard poppet (Code 1) is pressure balanced. The overlapped poppet (Code 8) shows smaller areas A_A respectively A_B.

E.g. for NG100

A_{Nom} = 7854 mm² = 600 %
A_{St} = 1307 mm² = 100 %
A_A=A_B = 157 mm² = 12 %

Dimensions

NG25

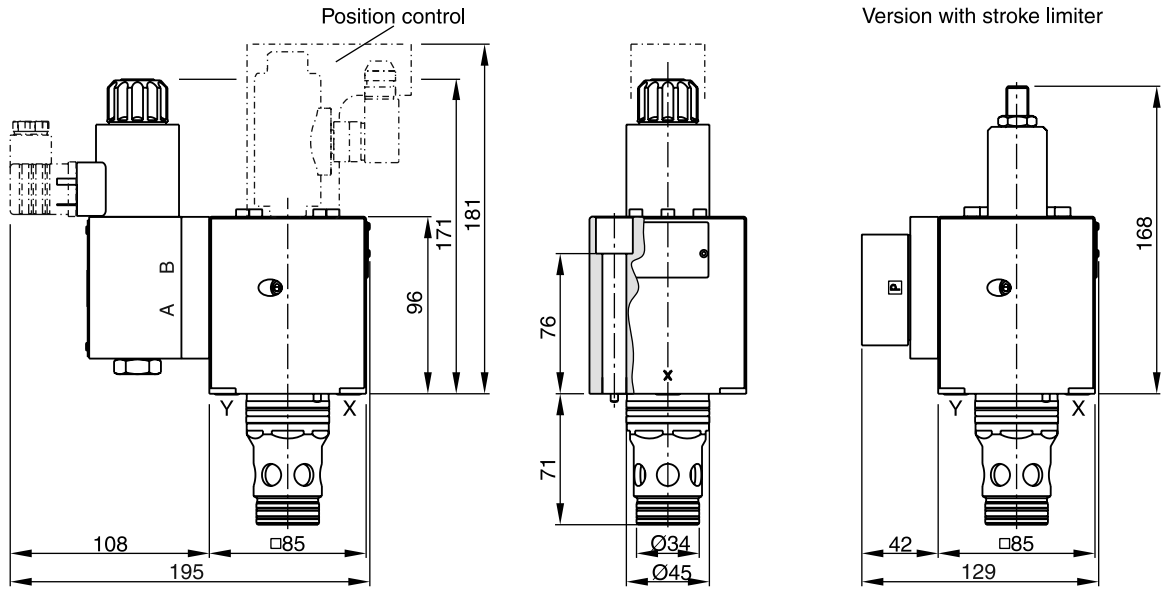

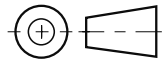

NG	Bolt kit		Kit NBR	Kit FPM
25	BK504 4x M12x100 ISO 4762-12.9	108 Nm	SK-TDW025EN30	SK-TDW025EV30

TDW UK.indd CM 16.04.15

NG32

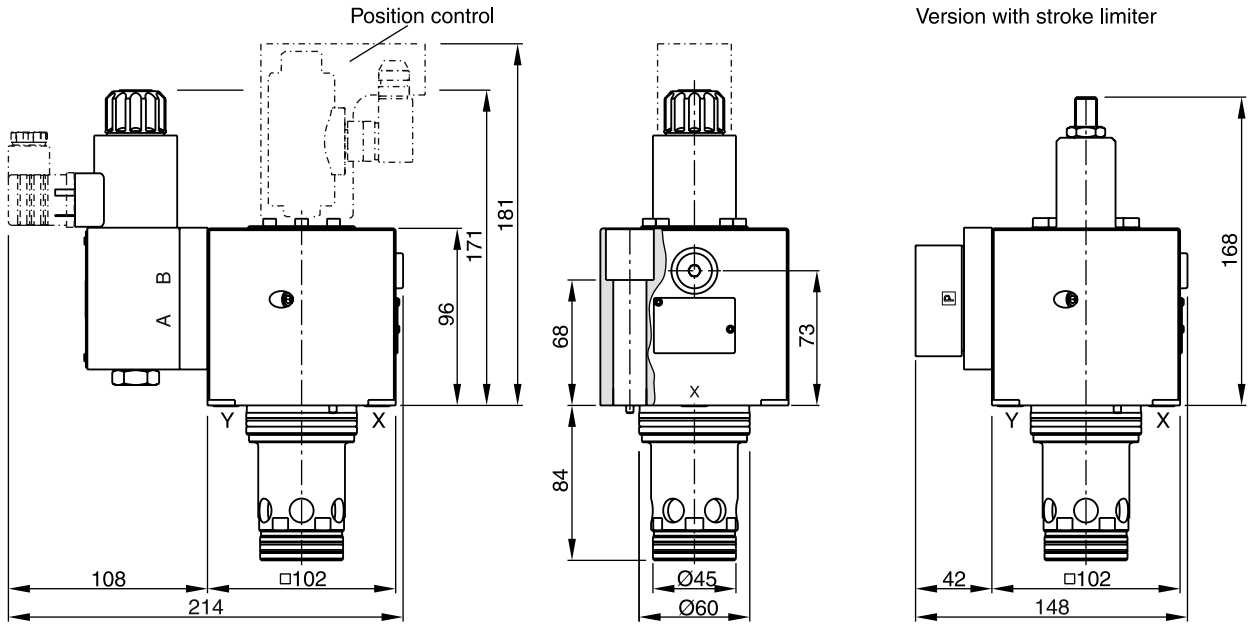

NG40

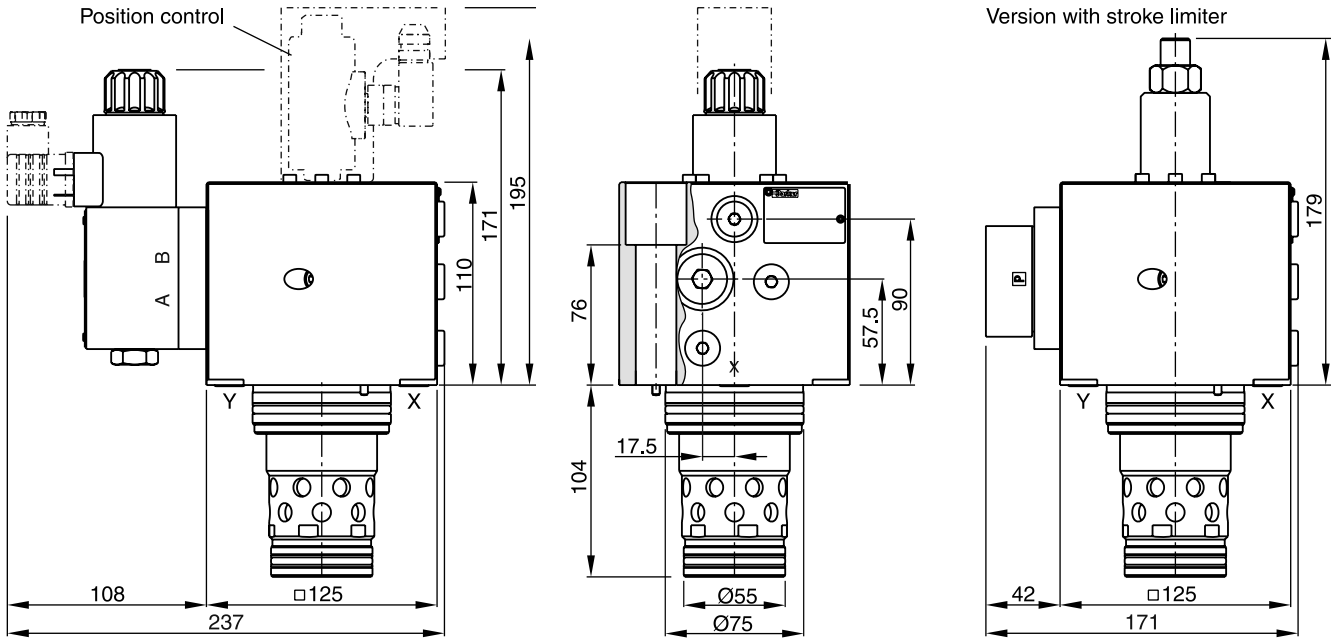

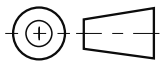

NG	Bolt kit			Kit NBR	Kit FPM
32	BK529	4 x M16x100	ISO 4762-12.9	264 Nm	SK-TDW032EN30	SK-TDW032EV30
40	BK481	4 x M20x110	ISO 4762-12.9	517 Nm	SK-TDW040EN30	SK-TDW040EV30

TDW UK.indd CM 16.04.15

NG50

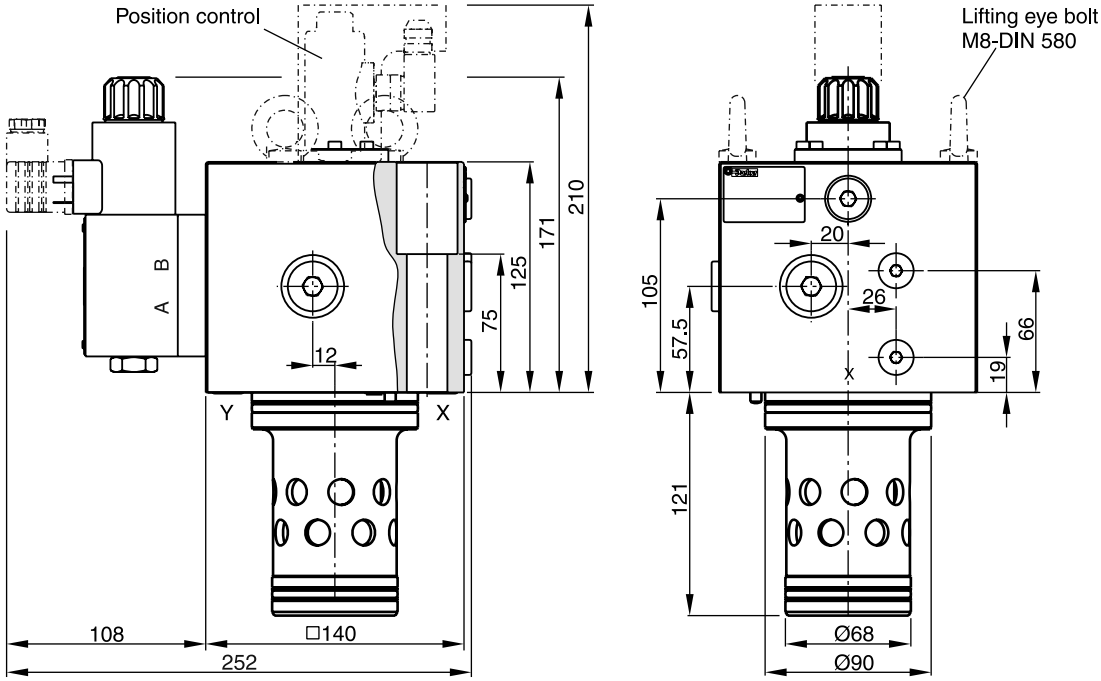

Lifting thread for disassembly M12

Version with stroke limiter

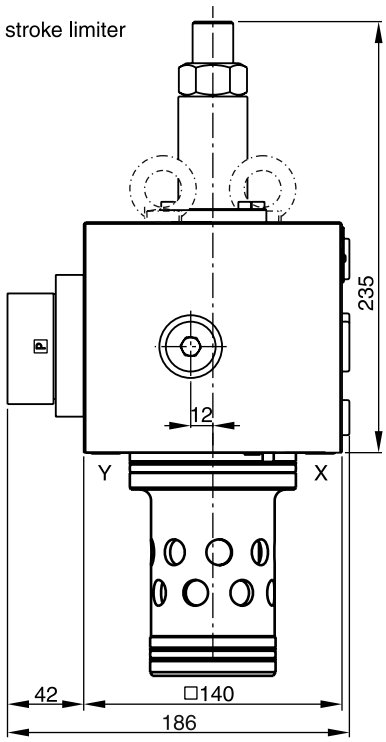

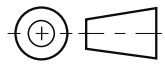

NG	Bolt kit		Kit NBR	Kit FPM
50	BK481 4 x M20x110 ISO 4762-12.9	517 Nm	SK-TDW050EN30	SK-TDW050EV30

TDW UK.indd CM 16.04.15

Dimensions

NG63

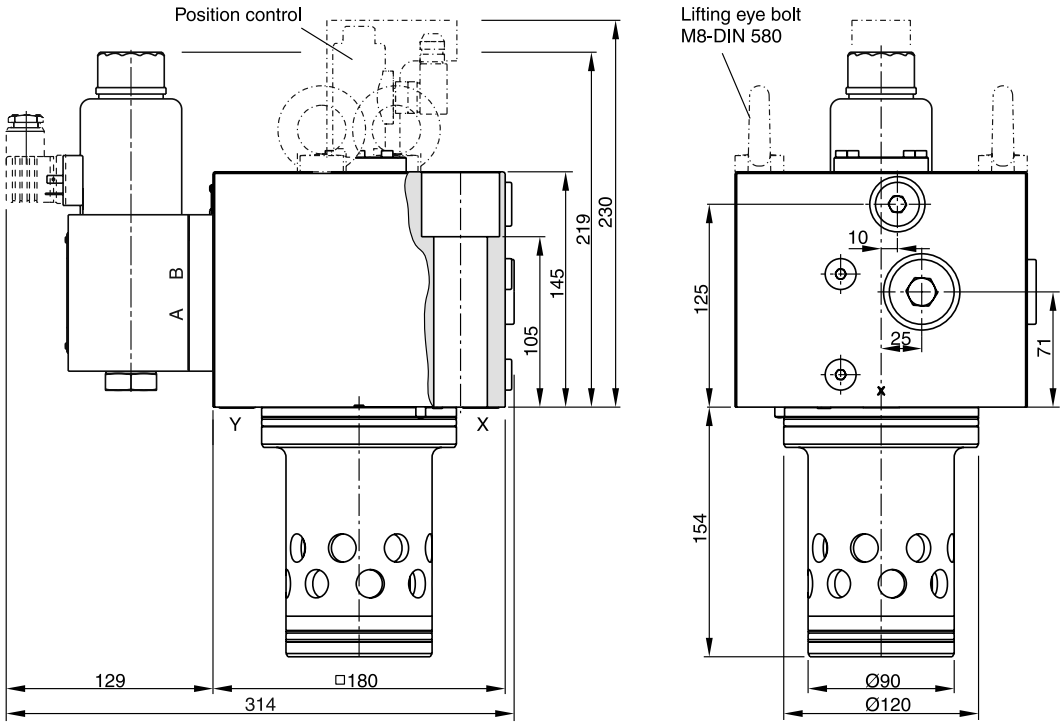

Lifting thread for disassembly M12

Version with stroke limiter

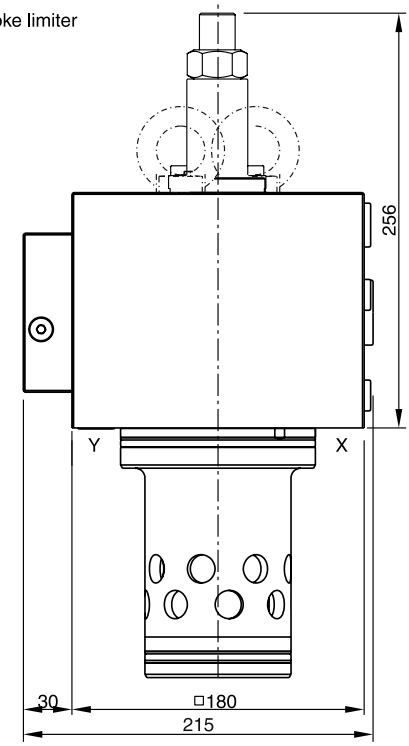

NG	Bolt kit		Kit NBR	Kit FPM
63	BK518 4 x M30x160 ISO 4762-12.9	1775 Nm	SK-TDW063EN30	SK-TDW063EV30

TDW UK.indd CM 16.04.15

NG80

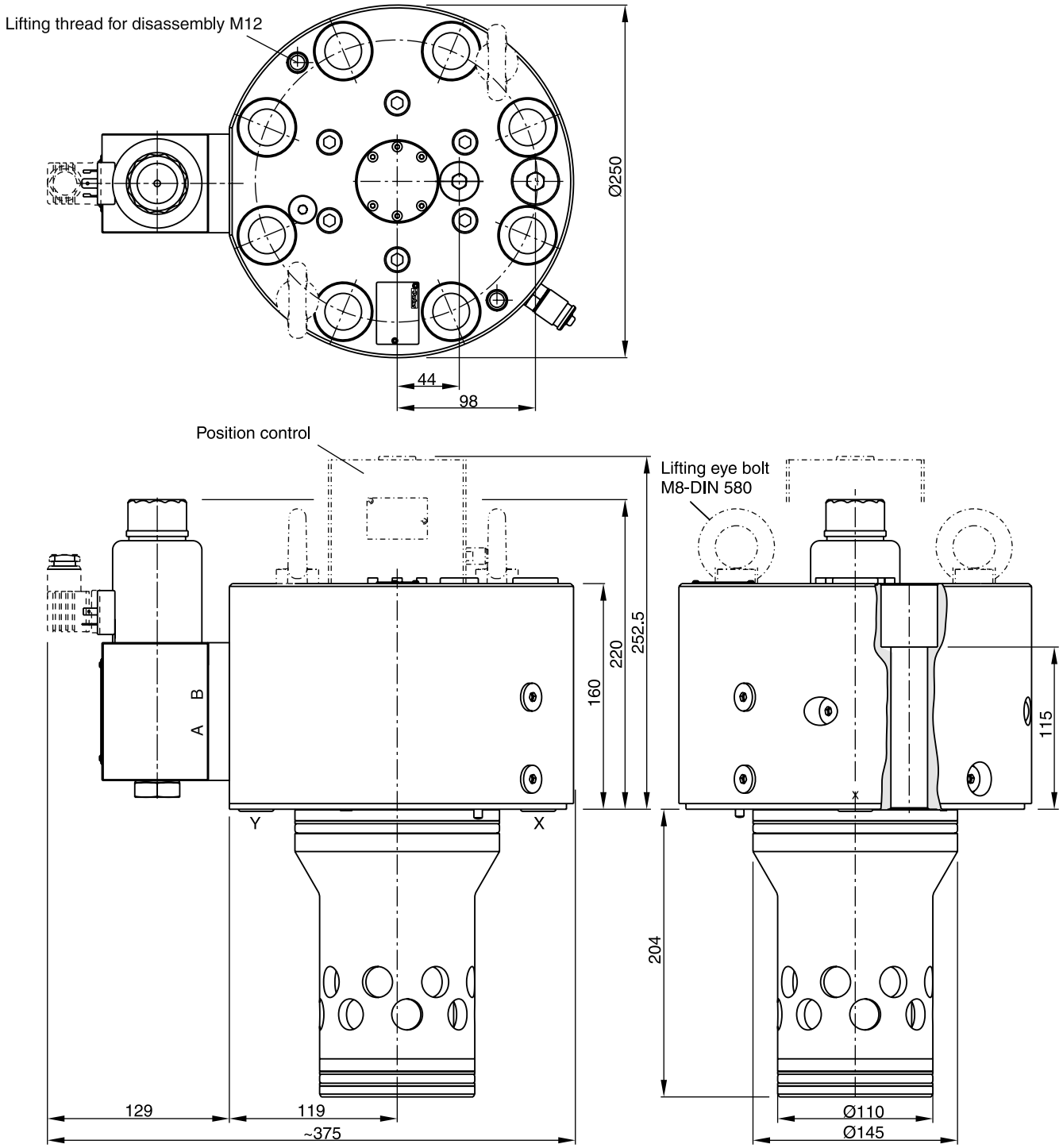

NG	Bolt kit		Kit NBR	Kit FPM
80	BK530 8x M24x160 ISO 4762-12.9	890 Nm	SK-TDW080EN30	SK-TDW080EV30

TDW UK.indd CM 16.04.15

NG100

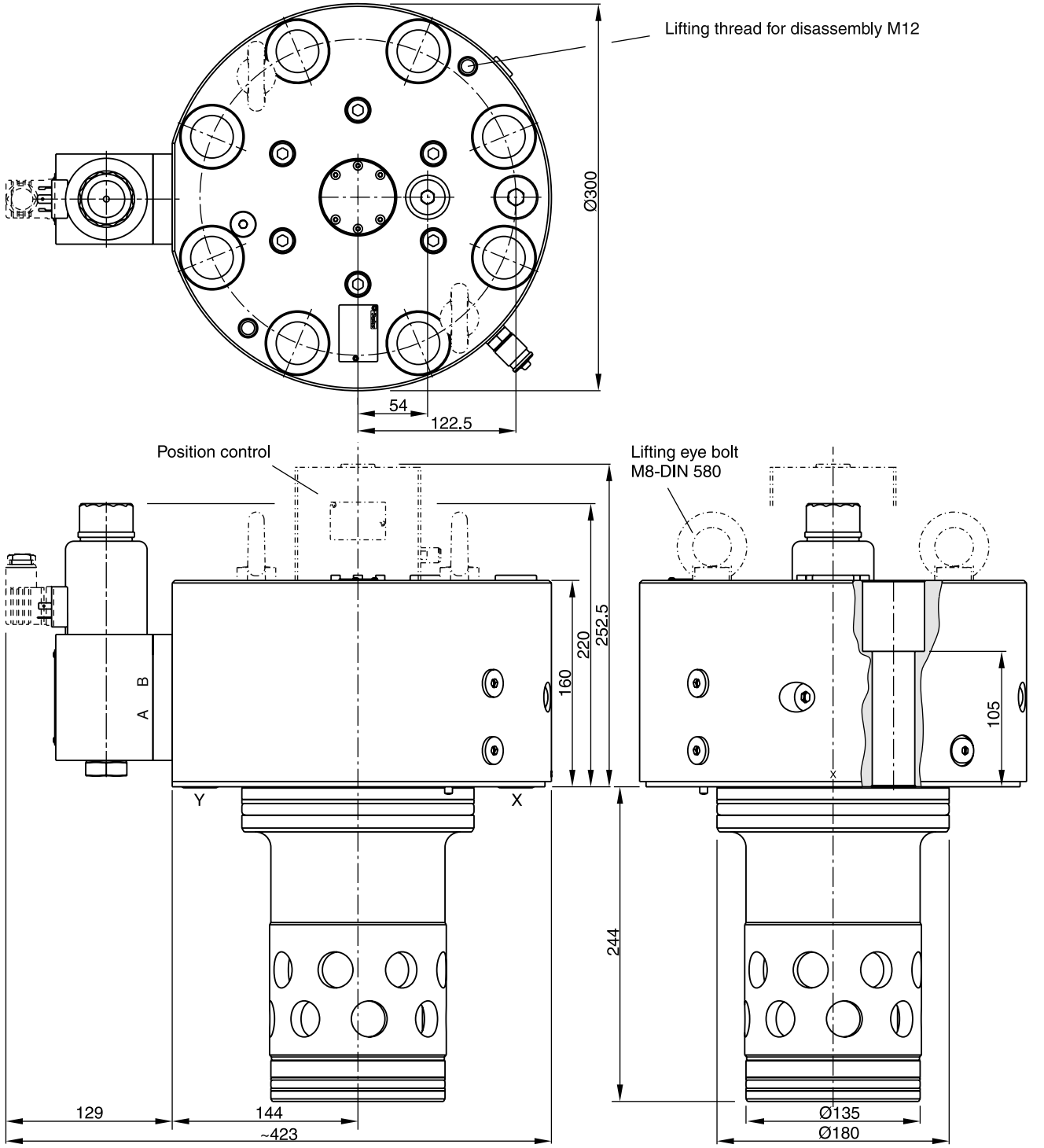

NG	Bolt kit		Kit NBR	Kit FPM
100	BK531 8x M30x150 ISO 4762-12.9	1775 Nm	SK-TDW100EN30	SK-TDW100EV30

TDW UK.indd CM 16.04.15

NG125

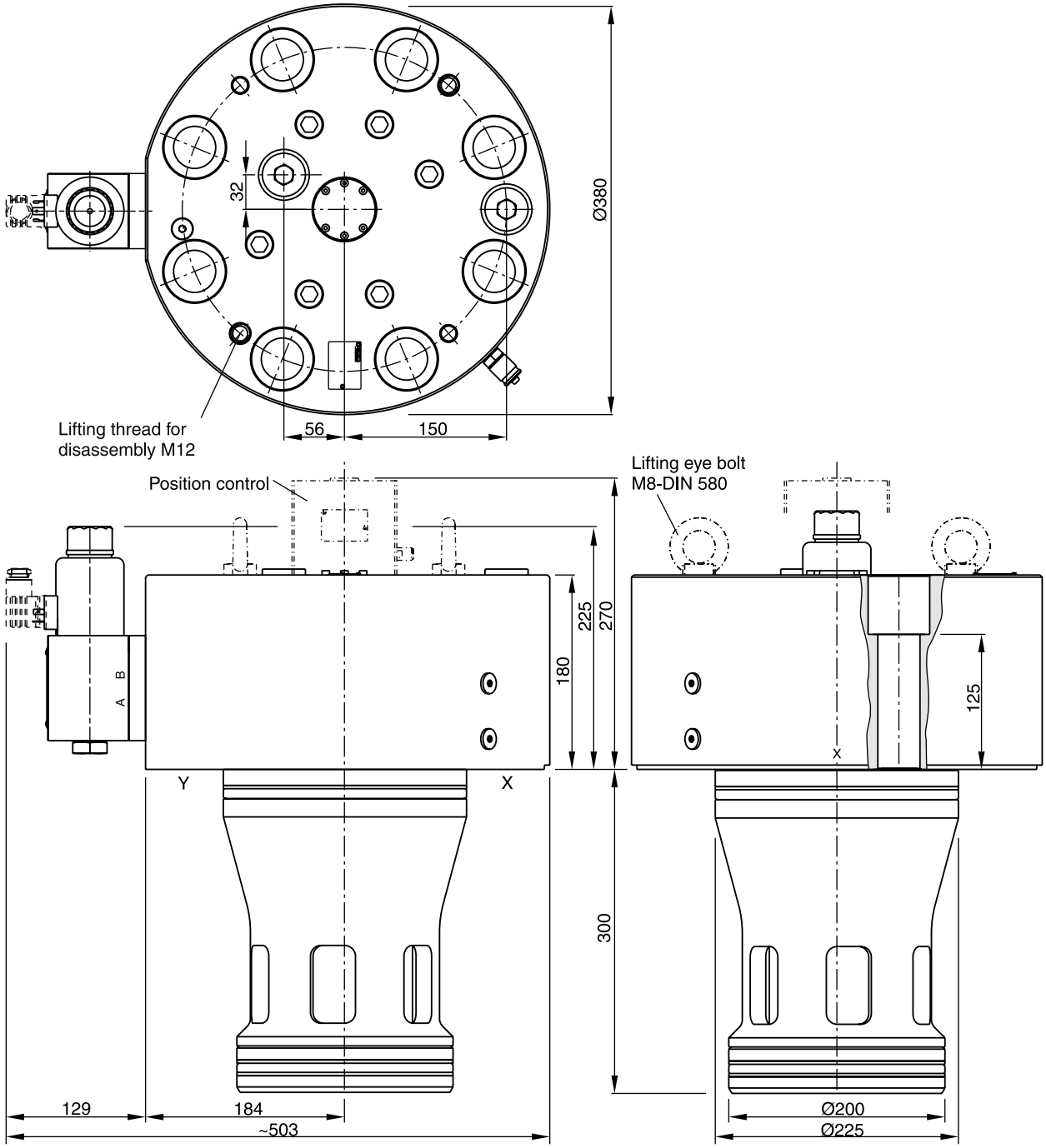

NG	Bolt kit		Kit NBR	Kit FPM
125	BK537 8x M36x180 ISO 4762-12.9	3100 Nm	SK-TDW125EN30	SK-TDW125EV30

TDW UK.indd CM 16.04.15

Code: ISO 7368-B*-*-2-A/B
NG25 to NG63

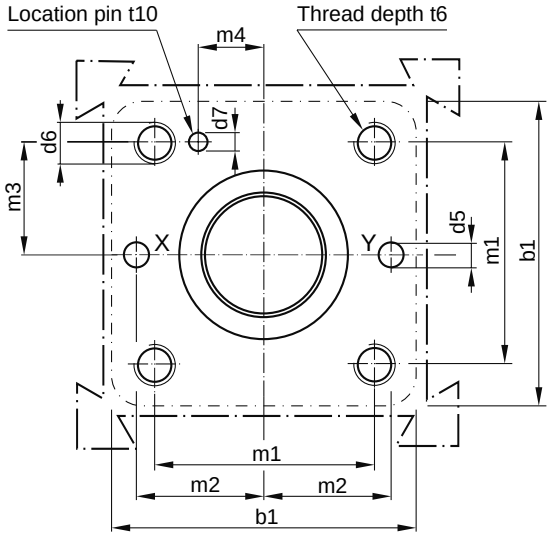

Code: ISO 7368-B*-*-2-A (except for size NG125)
NG80 to NG125

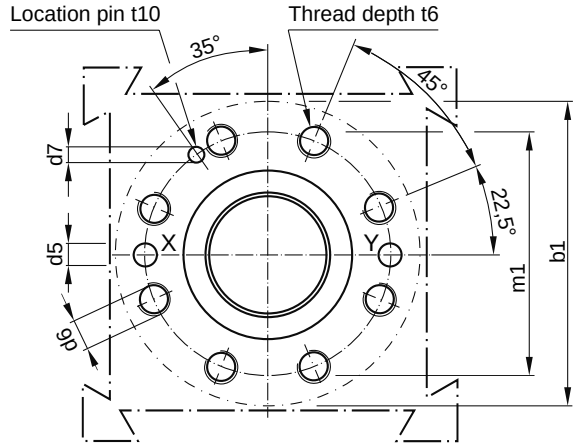

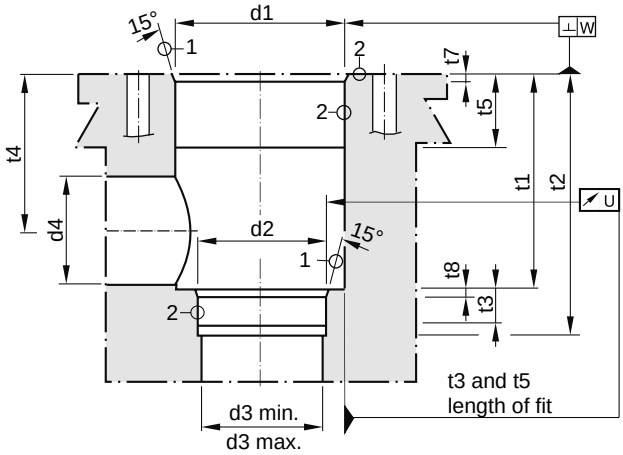

Required surface finish:

1 = $\sqrt{R_{max}16}$, 2 = $\sqrt{R_{max}8}$

Deviating from ISO 7368 it is advisable to increase the diameters d3, d4 and d5.

8

Size	b1	d1 H7	d2 H7	d3	d3 max	d4 max[1)]	d5 max	d6	d7 H13	m1±0.2	m2±0.2	m3±0.2
25	85	45	34	25	27	32	6	M 12	4	58	33	29
32	102	60	45	32	44	50	8	M 16	6	70	41	35
40	125	75	55	40	54	63	10	M 20	6	85	50	42.5
50	140	90	68	50	67	80	10	M 20	8	100	58	50
63	180	120	90	63	89	100	12	M 30	8	125	75	62.5
80	250	145	110	80	109	110	16	M 24	10	200	—	—
100	300	180	135	100	134	150	20	M 30	10	245	—	—
125	380	225	200	125	150	150	32	M 36	9	300	—	—

Size	m4±0.2	t1+0.5	t2+1	t3	t4	t4 max[1)]	t5	t6	t7	t8	t10	U	W
25	16	58	72	12	44	40.5	30	35	2,5	2,5	10	0.03	0.05
32	17	70	85	13	52	44	15	35	2.5	2.5	10	0.03	0.1
40	23	87	105	15	64	54	15	45	3	3	10	0.05	0.1
50	30	100	122	17	72	59	17	45	4	3	10	0.05	0.1
63	38	130	155	20	95	78	19	65	4	4	10	0.05	0.2
80	—	175	205	25	130	115	32	50	5	5	10	0.05	0.2
100	—	210	245	29	155	133	32	53	5	5	10	0.05	0.2
125	—	257	300 $^{+0.15}$	31	192	180	40	62	5.5	7	10	0,05	0.2

[1)] Only in combination with d4max and t4max.

TDW UK.indd CM 16.04.15

The 2-way proportional throttle valves series TDA are used to control large oil flows.

Features

- Cavity and mounting pattern according to ISO 7368
- Fail-safe function at power failure
- Leak-free from port B to A
- Pressure differential up to 350 bar possible
- 8 sizes NG16 up to NG100

Function

The 2-way proportional throttle valves have a 3-stage design consisting of the first solenoid operated pilot stage with a spool in sleeve design, the second pilot stage with the control spring and the sequence spool and as main stage the poppet in the sleeve. The proportional solenoid operates the pilot spool against the feedback of the control spring and controls the position of the sequence spool. The main poppet follows the position of the sequence spool and provides an open area for flow from B to A (optional A to B) in proportion to the solenoid current. The poppet is positioned independently of the differential pressure, which can become as high as the maximum working pressure.

In combination with the digital power amplifier PC-D00A-400 the valve parameters can be saved, changed and duplicated.

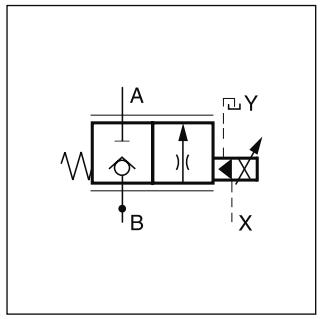

TDA025

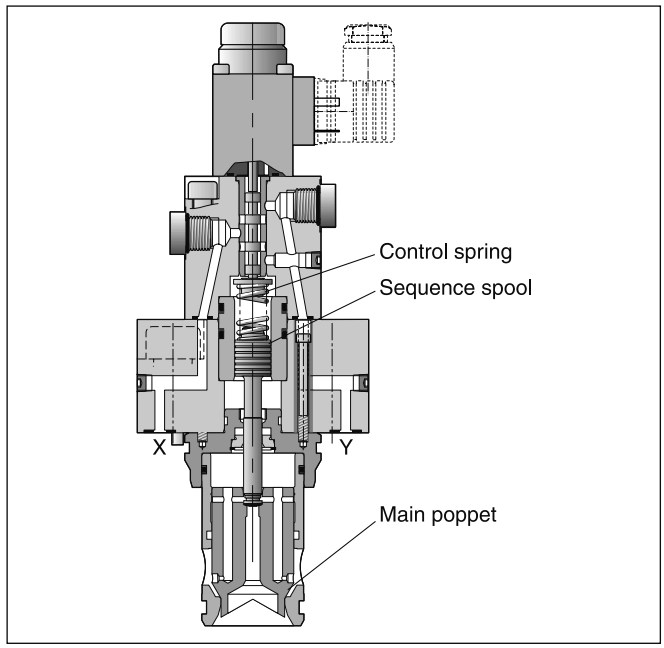

8

Ordering code

TDA		E	W	0			2			W	
2-way proportional throttle valve	Nominal size	Slip-in valve DIN ISO 7368	Design	Poppet shape	Nominal flow	Flow direction	Piloting	Seal	Solenoid voltage	Plug socket without plug	Design series (not required for ordering)

Code	Nominal size
016	NG16
025	**NG25**
032	**NG32**
040	**NG40**
050	**NG50**
063	NG63
080	NG80
100	NG100

Code	Nominal flow
9	**Nominal flow**
6 [1)]	**Reduced flow**

[1)] Only for NG16 and NG25.

Code	Solenoid voltage
X	**16 VDC**
L	6 VDC

Code	Seal
N	**NBR**
V	**FPM**

Code	Flow direction
A	A to B
B	**B to A**

Bold letters =
Short-term availability

TDA UK.INDD CM 16.04.15

General									
Design		2-way proportional throttle valves, slip-in cartridge according to ISO 7368							
Nominal size		**NG16**	**NG25**	**NG32**	**NG40**	**NG50**	**NG63**	**NG80**	**NG100**
Mounting position		unrestricted							
Ambient temperature	[°C]	-20...+60							
MTTF$_D$ value	[years]	75							
Weight	[kg]	3.1	4.3	5.8	9.2	15	33	63	87
Extracting tool		see accessories							
Hydraulics									
Max. operating pressure	[bar]	Ports A, B and X up to 350, port Y: max. 10							
Fluid		Hydraulic oil according to DIN 51524							
Fluid temperature	[°C]	-20...+70 (NBR: -25...+70)							
Viscosity permitted recommended	[cSt] / [mm²/s] [cSt] / [mm²/s]	20...400 30...80							
Filtration		ISO 4406 (1999); 18/16/13							
Nominal flow at Δp = 10 bar	[l/min]	220	500	950	1400	2300	4000	6000	9500
Flow direction		see ordering code							
Pilot pressure, min.	[bar]	> 25 % of system pressure							
Min. operating pressure	[bar]	Port A → B approx. 10; Port B → A approx. 15							
Pilot oil supply drain		Depending on flow direction A or B using X or external X External using port Y max. 10 bar							
Pilot oil at p = 100 bar	[l/min]	Port X → Y <1.5							
Opening point		At 30 % of nominal current							
Manufacturing tolerance	[%]	±5 of Qnom							
Static/dynamic									
Response time at px=50 bar	[ms]	20	25	30	35	45	55	65	80
Hysteresis	[%]	< 3							
Repeatabiltity	[%]	< 1							
Electrical (proportional solenoid)									
Duty ratio		100 % ED							
Protection class		IP65 according to EN 60529 (with correctly mounted plug-in connector)							
Solenoid	Code	L				X			
	at size	16-50		63-100		16-50		63-100	
Solenoid voltage	[V]	6				16			
Nominal current (100 % ED)	[A]	2.6				1.05			
Nominal resistance	[Ohm]	2.2		2.5		11.3		14	
Power amplifier, recommended		PCD 00A-400							
Solenoid connection		Connector as per EN 175301-803							

The pilot pressure in X-line must be at least 25 % (NG16-40) or 45 % (NG50-100) of the pressure in the draining-off line of the cartridge to make sure that the main poppet closes safely without malfunction.

Solenoid current / flow curves
NG16-25 (Δp = 10 bar)

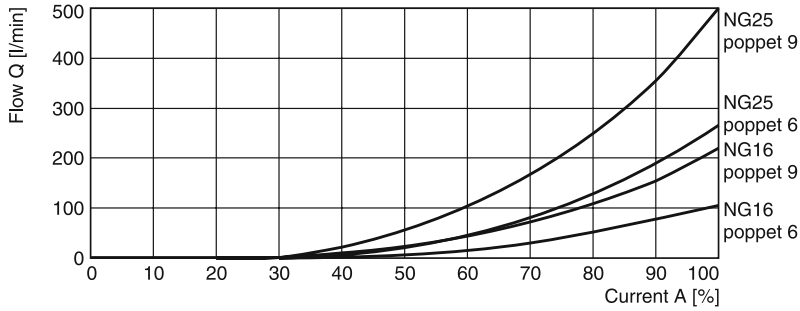

NG32-50 (Δp = 10 bar)

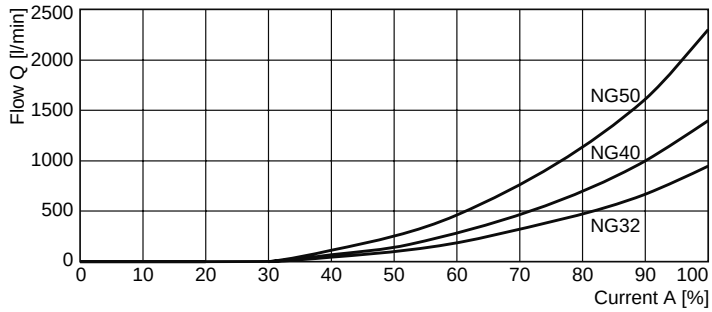

NG63-100 (Δp = 10 bar)

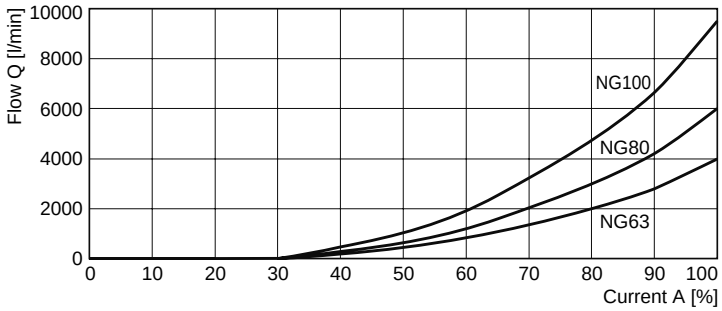

$$\Delta p_{actual} = \left(\frac{Q_{actual}}{Q_{nominal}}\right)^2 \bullet \Delta p_{nominal}$$

Poppet stroke / time curve

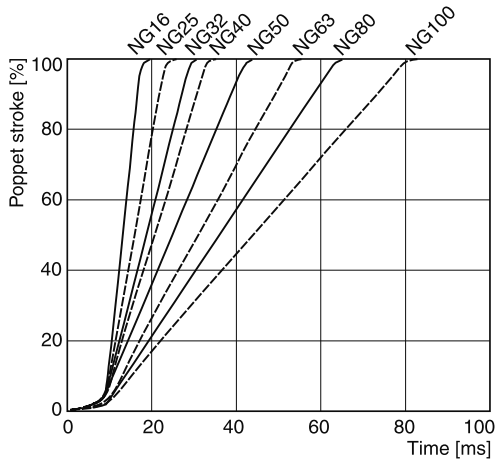

All characteristic curves measured with HLP46 at 50 °C.

TDA UK.INDD CM 16.04.15

Valves

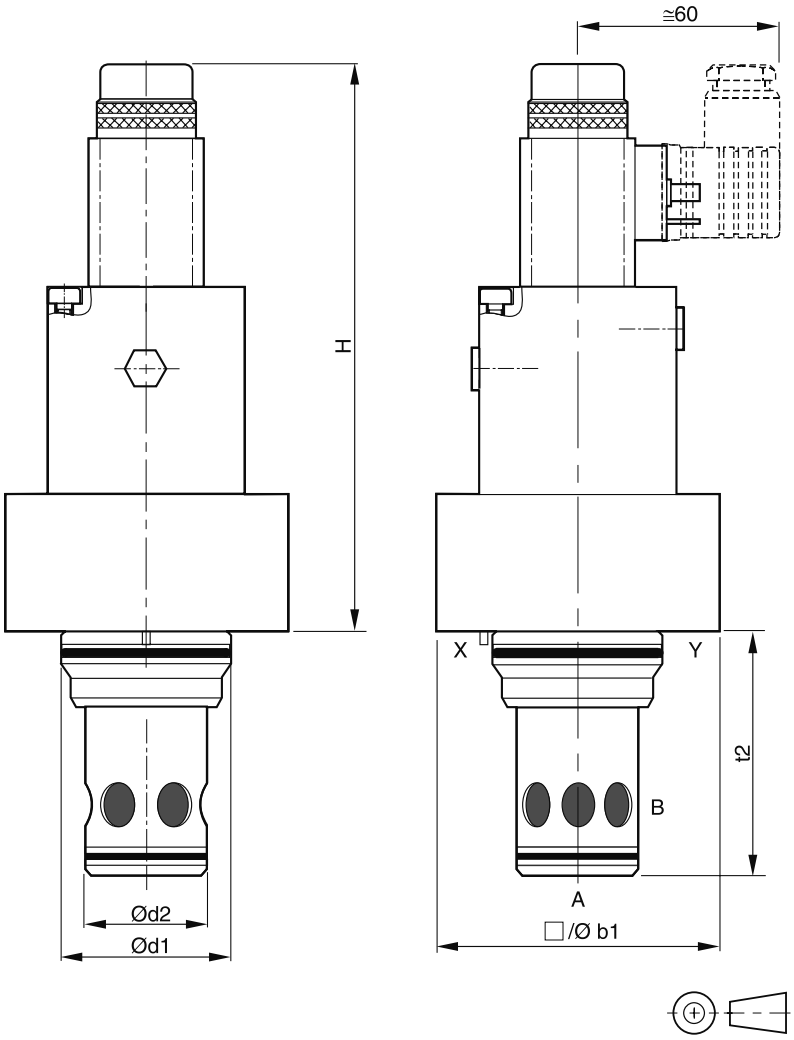

Valve covers

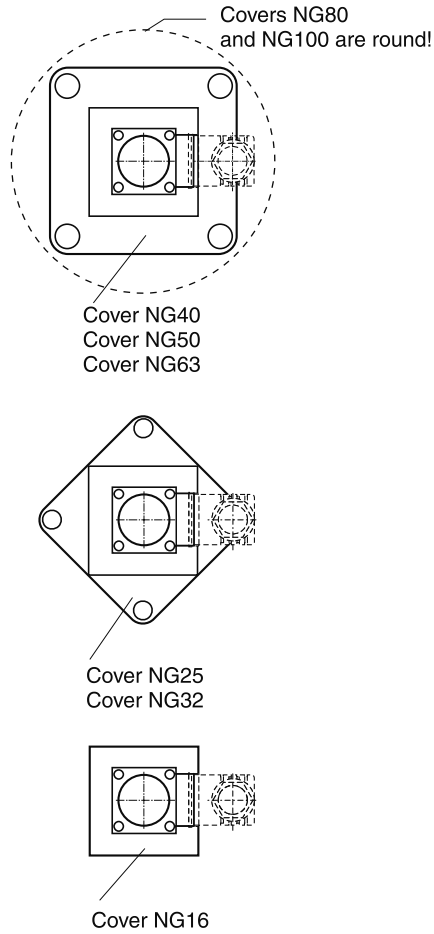

Size	16	25	32	40	50	63	80	100
H	168	177	182	192	202	304	324	339
b1	65	85	102	125	140	180	Ø250	Ø300
$d1^{H7}$	32	45	60	75	90	120	145	180
$d2^{H7}$	25	34	45	55	68	90	110	135
$t2^{+0.1}$	56	72	85	105	122	155	205	245

NG	Kit	ISO 4762-12.9		Kit	
				NBR	FPM
16	BK510	4x M8x100	31.8 Nm	SK-TDA016EN	SK-TDA016EV
25	BK391	4x M12x50	108 Nm	SK-TDA025EN	SK-TDA025EV
32	BK415	4x M16x55	264 Nm	SK-TDA032EN	SK-TDA032EV
40	BK416	4x M20x70	517 Nm	SK-TDA040EN	SK-TDA040EV
50	BK417	4x M20x75	517 Nm	SK-TDA050EN	SK-TDA050EV
63	BK418	4x M30x100	1775 Nm	SK-TDA063EN	SK-TDA063EV
80	BK419	8x M24x120	890 Nm	SK-TDA080EN	SK-TDA080EV
100	BK420	8x M30x140	1775 Nm	SK-TDA100EN	SK-TDA100EV

TDA UK.INDD CM 16.04.15

Accumulator discharge valves series TEA are preferably used in hydraulic systems where high flow rates are discharged from hydraulic accumulators over a short operating period (in the range of milliseconds). Typical applications are injection molding and die casting machines as well as hydraulic presses.

Basically the function of an accumulator discharge valve corresponds to the function of a TDA throttle valve. In addition a directional valve is integrated in the pilot circuit to meet the relevant safety regulations.

The directional valve provides the safety function. When the solenoid is deenergized and the spring is in end position, pilot pressure from X presses the control piston into lower end position and the main poppet is closed. As a result the flow from B to A or from the reservoir system to the machine is blocked.

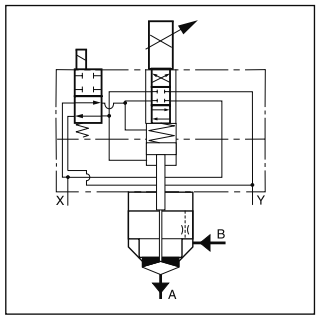

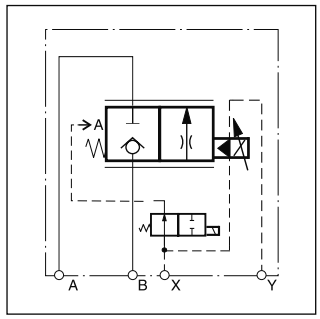

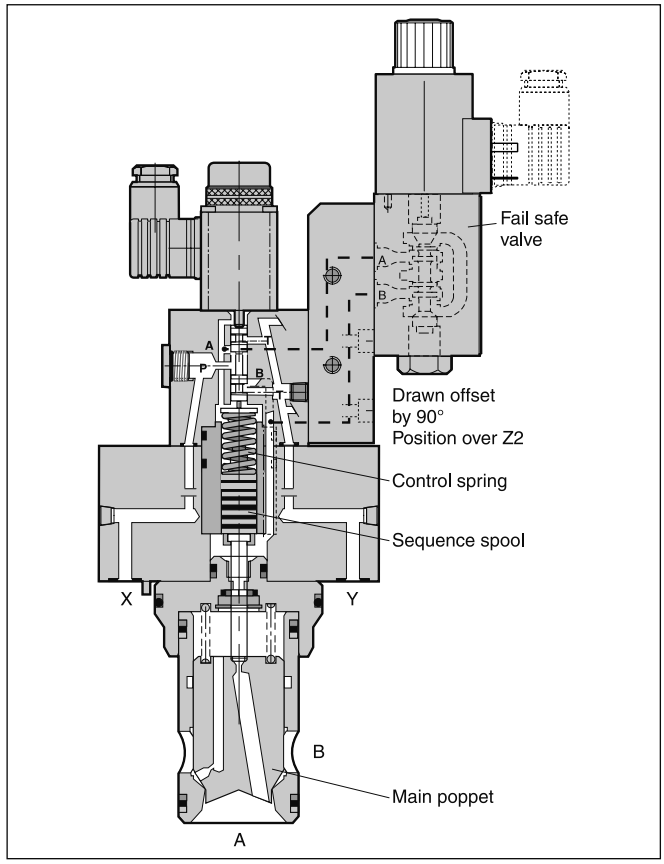

Characteristic curve

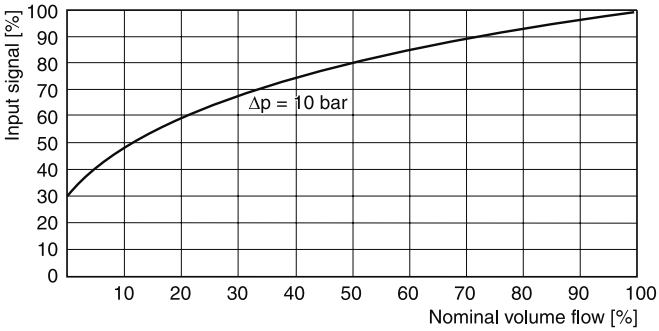

Characteristic curve measured with HLP46 at 50 °C.

Example accumulator system in a die casting machine

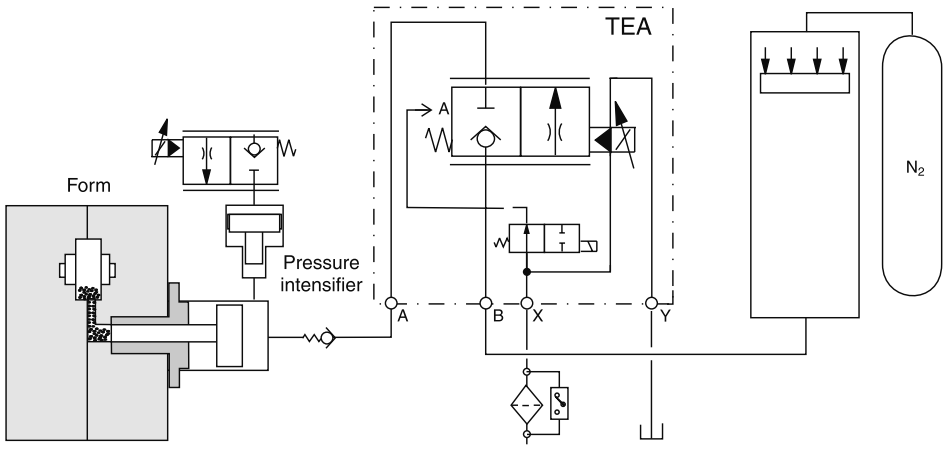

Ordering code

TEA		E	W	0	9		2			W		
2-way Prop. throttle valve with shut-off function	**Nominal size**	**Cartridge valve ISO 7368**	**Design**	**Spool form**	**Flow code**	**Flow direction**	**Pilot oil guide**	**Seals**	**Prop. solenoid voltage**	**Plug socket without plug**	**Solenoid voltage**	**Design series** (not required for ordering)

Code	Nominal size
032	NG32
040	**NG40**
050	**NG50**
063	**NG63**
080	NG80
100	NG100

Code	Flow direction
A	A to B
B	**B to A**

Bold letters =
Short-term availability

Code	Solenoid
J	**24 V= / 1.25 A**
U [1)]	98 V= / 0.31 A
G [1)]	205 V= / 0.15 A

Code	Proportional solenoid voltage
L	**6 VDC**
X	**16 VDC**

Code	Seal
N	**NBR**
V	FPM

[1)] To be used in combination with rectifier plugs at 120 VAC / 230 VAC power supply.

Technical data

General							
Design		2-way Proportional throttle valve, slip-in cartridge according to ISO 7368					
Nominal size		**NG32**	**NG40**	**NG50**	**NG63**	**NG80**	**NG100**
Mounting position		unrestricted					
Ambient temperature	[°C]	-20...+60					
$MTTF_D$ value	[years]	75					
Weight	[kg]	9	13	22	38	62	85
Extracting tools		See accessories					
Hydraulics							
Max. operating pressure	[bar]	Ports A, B and X up to 350, port Y max. 10					
Fluid		Hydraulic oil according to DIN 51524					
Fluid temperature	[°C]	-20...+70 (NBR: -25...+70)					
Viscosity, permitted	[cSt]/[mm²/s]	20...400					
recommended	[cSt]/[mm²/s]	30...80					
Filtration		ISO 4406 (1999); 18/16/13					
Nominal flow Δp = 10 bar	[l/min]	950	1400	2300	4000	6000	9500
Pilot pressure, min.	[bar]	> 25 % of system pressure					
Pilot oil	supply	Depending on flow direction A or B using X or external X					
Pilot oil at p = 100 bar	[l/min]	Port X → Y <1.5					
Opening point		At 30 % of nominal current					
Manufacturing tolerance	[%]	±5 of Qnom					
Static/dynamic							
Response time at px = 50 bar	[ms]	30	35	45	55	65	80
Hysteresis	[%]	< 3					
Repeatability	[%]	< 1					
Electrical (proportional solenoid)							
Duty ratio		100 % ED					
Protection class		IP65 according to EN 60529 (with correctly mounted plug-in connector)					
Solenoid	Code	L			X		
at size		16-50	63-100		16-50	63-100	
Solenoid voltage	[V]	6			16		
Nominal current (100 % ED)	[A]	2.6			1.05		
Nominal resistance	[Ohm]	2.2	2.5		11.3	14	
Power amplifier, recommended		PCD 00A-400, Connector as per EN 175301-803					
Solenoid connection pilot valve		4/2 flow control valve					
		Type D1VW			Type D3DW		

TEA UK.INDD CM 16.04.15

8

TEA NG32...50

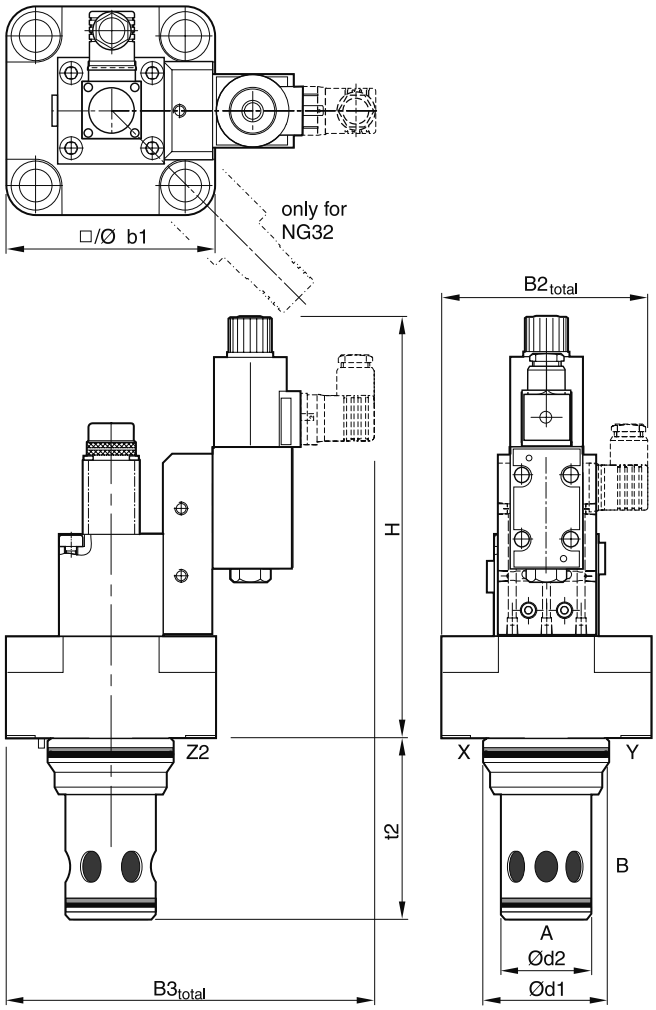

TEA NG63...100

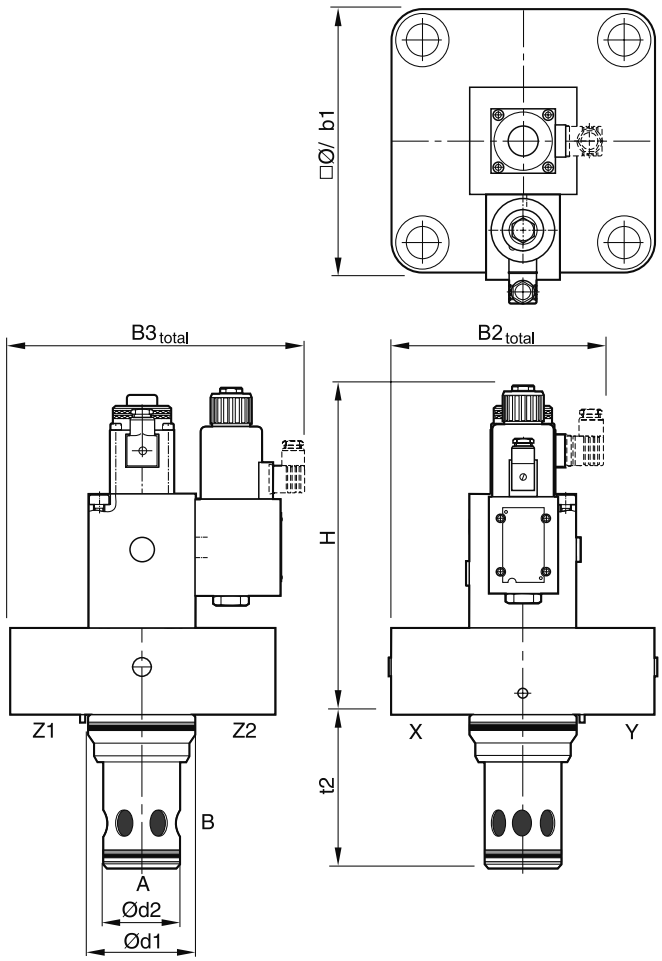

Size	32	40	50	63	80	100
H	250	260	270	312	337	352
b1	102	125	140	180	Ø 250	Ø 300
$d1^{H7}$	60	75	90	120	145	180
$d2^{H7}$	45	55	68	90	110	135
$t2^{+0.1}$	85	105	122	155	205	245
$B2_{total}$	106	118	125	158	193	218
$B3_{total}$	205	216	224	255	290	315

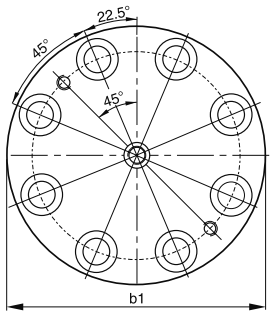

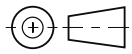

NG	Kit	ISO 4762-12.9		Kit NBR	Kit FPM
32	BK415	4x M16x55	264 Nm	SK-TEAN10E32	SK-TEAN10E32V
40	BK416	4x M20x70	517 Nm	SK-TEAN10E40	SK-TEAN10E40V
50	BK417	4x M20x75	517 Nm	SK-TEAN10E50	SK-TEAN10E50V
63	BK418	4x M30x100	1775 Nm	SK-TEAN10E63	SK-TEAN10E63V
80	BK419	8x M24x120	890 Nm	SK-TEAN10E80	SK-TEAN10E80V
100	BK420	8x M30x140	1775 Nm	SK-TEAN10E100	SK-TEAN10E100V

TEA UK.INDD CM 16.04.15

The 2-way high-response valves series TDP are used in applications where high flow has to be precisely controlled at maximum dynamics. Typical applications are die casting, injection moulding and hydraulic presses.

Function

The 2-way high-response valves TDP have a 2-stage design consisting of a DFplus pilot valve and a main stage with poppet and LVDT.

With the DFplus pilot valve the TDP achieves extremely fast response times: from 10.5 ms (NG25) up to 46 ms (NG125) with an accuracy of <0.1 % of the nominal flow. The pilot valve actively controls the poppet - independent of the pressure conditions in the main ports.
It is basically required that the pilot pressure is at the level of the system pressure. At low system pressure the pilot pressure should be min. 140 bar, when high valve dynamics are desired.

The integrated electronics in the pilot of the TDP has two control loops for the main poppet and the pilot spool.

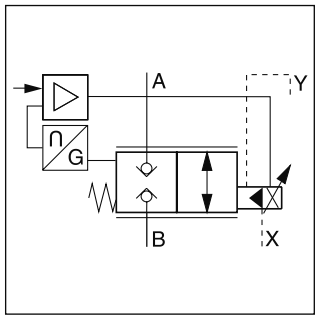

TDP032

Features

- Active pilot operated 2-way high-response valve
- Cavity and mounting pattern according to ISO 7368 (except for size NG125)
- Fast step response
- Flow direction B to A and A to B
- Completely mounted and adapted unit with integrated electronics
- 8 sizes NG25 up to NG125

TDP040

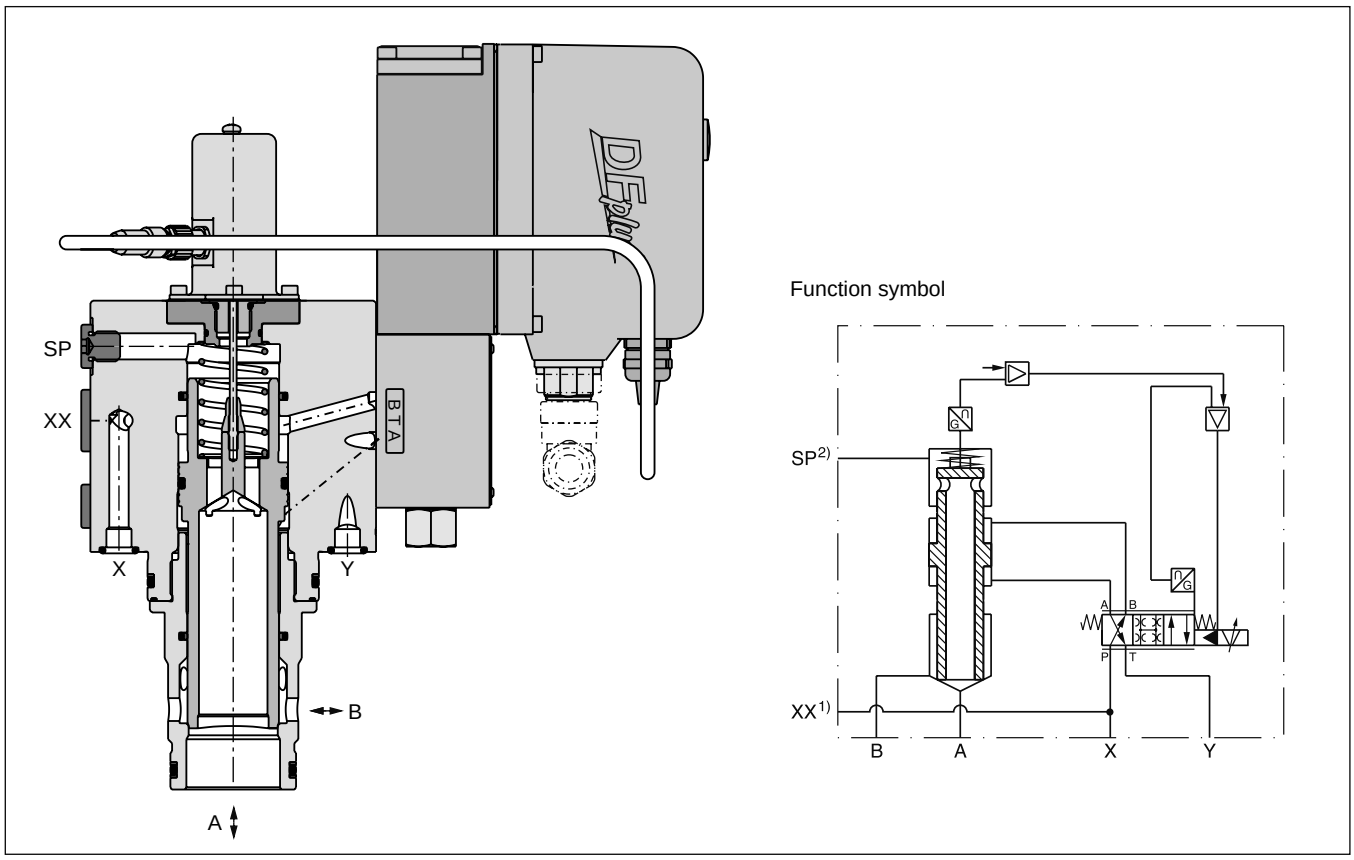

1) NG25 and NG32 without accu port XX.
2) NG25 without suction port SP.

Ordering code

TDP	☐	E	☐	☐	9	C	2	☐	☐	0	☐
2-way high-response valve	**Nominal size**	**Slip-in cartridge**	**Performance**	**Flow charac-teristic**	**Nominal flow**	**Flow direction B → A A → B**	**Pilot oil** (supply ex-ternal, drain external)	**Seal**	**Command signal**	**Standard electronics**	**Design series** (not required for ordering)

Code	Nominal size
025	NG25
032	NG32
040	NG40
050	NG50
063	NG63
080	NG80
100	NG100
125	NG125

Code	Performance
D	VCD® dynamics especially for closed loop applications
H	VCD® dynamics especially for controlled applications

Code	Command signal
B	0...+10 V
E	0...+20 mA
S	4...+20 mA

Code	Seal
N [1)]	NBR
V	FPM

Code	Flow characteristic
7	progressive
9	linear

[1)] HFC fluids suitable

The DFplus pilot valve is also available with EtherCAT interface, see chapter 3, D*FP and D*1FP with EtherCAT.

Please order connector separately
Angle female connector must be used for NG25 to NG50.

8

Characteristic flow/signal line

Δp = 5 bar

Linear (code 9)

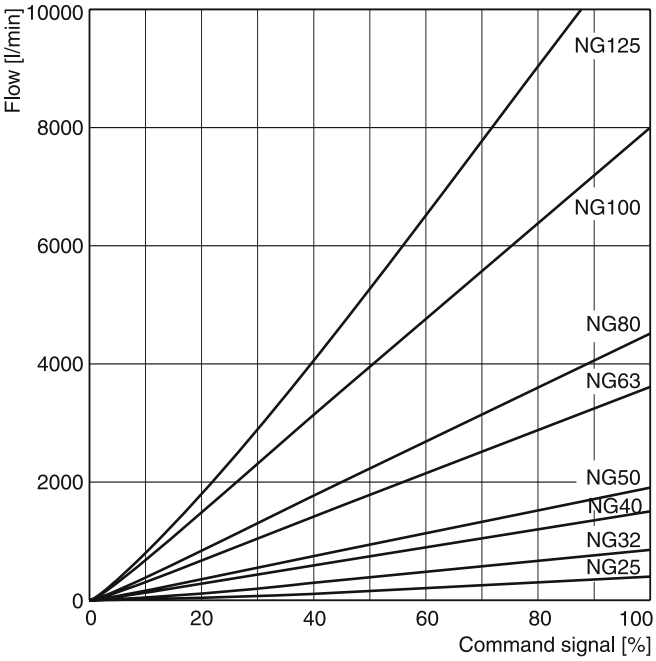

Progressive (code 7)
(for TDL replacement)

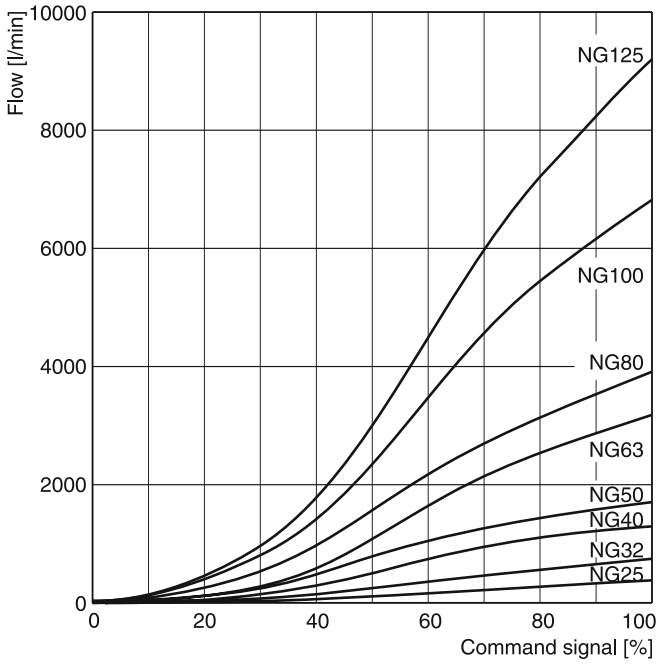

Opening point factory set to 3 %

Flow at different Δp $Q_{actual} = Q_{nominal} \cdot \sqrt{\Delta p_{actual} / \Delta p_{nominal}}$

Characteristic curve measured with HLP46 at 50 °C.

TDP UK.INDD CM 16.04.15

General									
Design		Proportional throttle valve, slip-in cartridge according to ISO 7368 (except for size NG125)							
Nominal size	DIN	**NG25**	**NG32**	**NG40**	**NG50**	**NG63**	**NG80**	**NG100**	**NG125**
Mounting position		unrestricted							
Ambient temperature	[°C]	-20...+50							
$MTTF_D$ value [1)]	[years]	75							
Weight	[kg]	11	13	15	26	52	105	157	193
Vibration resistance	[g]	10 sinus 5...2000 Hz acc. IEC 68-2-6 30 random noise 20...2000 Hz acc. IEC 68-2-36 15 shock acc. IEC 68-2-27							
Hydraulic									
Max. operating pressure	[bar]	Ports A, B, X and SP up to 350, XX observe accumulator pressure rating; port Y: max. 35							
Fluid		Hydraulic oil according to DIN 51524							
Fluid temperature	[°C]	-20...+60 (NBR: -25...+60)							
Viscosity recommended	[cSt] / [mm²/s]	30 ... 80							
Viscosity permitted	[cSt] / [mm²/s]	20 ... 400							
Filtration		ISO 4406 (1999); 18/16/13							
Nominal flow at Δp = 5 bar (linear)	[l/min]	420	850	1500	1900	3600	4500	8000	11500
Recommended max. flow (linear)	[l/min]	800	2000	3000	4500	8000	13000	20000	29000
Nominal flow at Δp = 5 bar (progressive)	[l/min]	380	750	1300	1700	3200	3900	6800	9200
Recommended max. flow (progressive)	[l/min]	700	1750	1600	4000	7000	11250	17000	23000
Flow direction		B to A / A to B							
Pilot pressure	[bar]	must be as high as system pressure							
Pilot oil supply		external via X							
Pilot oil drain		external via Y							
Leakage in pilot valve at 100 bar	[ml/min]	<400							
Pilot valve size		NG06				NG10			
Max. pilot flow at 140 bar pilot pr.	[l/min]	23	30	40	40	70	80	100	100
Static/dynamic									
(for optimal dynamics see installation recommendation)									
Step response at pilot press. >140 bar	[ms]	10.5	12	14	20	17	23	28	46
Frequency response at pilot press. >140 bar									
Amplitude -3 dB; 10 % ±5 %	[Hz]	95	80	74	66	52	46	41	23
Phase -90°; 10 % +5 %	[Hz]	85	63	59	52	56	51	47	45
Hysteresis	[%]	< 0.1							
Sensitivity	[%]	< 0.05							
Temperature drift	[%/K]	< 0.025							

Electrical		
Duty ratio	[%]	100
Protection class		IP65 in accordance with EN 60529 (with correctly mounted plug-in connector)
Supply voltage / ripple	[V]	DC 22 ... 30, electric shut-off at < 19, ripple < 5 % eff., surge free
Current consumption max.	[A]	3.5
Pre-fusing	[A]	4.0 A medium lag
Input signal Voltage	[V]	0...+10, ripple < 0,01 % eff., surge free
Impedance	[kOhm]	100
Current	[mA]	0...+20, ripple <0,01 % eff., surge free
Impedance	[Ohm]	250
Current	[mA]	4...20, ripple <0,01 % eff., surge free <3,6 mA = disable, , >3,8 mA = enble on according to NAMUR NE43
Impedance	[Ohm]	250
Differential input max.	[V]	30 for terminal D and E against PE (terminal G) 11 for terminal D and E against 0V (terminal B)
Enable signal	[V]	5...30, Ri = 9 kOhm
Diagnostic signal	[V]	0...+10 / +12.5 error detection, rated max. 5 mA
EMC		EN 61000-6-2, EN 61000-6-4
Electrical connection		6 + PE acc. EN 175201-804
Wiring min.	[mm²]	7 x 1.0 (AWG16) overall braid shield
Wiring length max.	[m]	50

[1)] If valves with onboard electronics are used in safety-related parts of control systems, in case the safety function is requested, the valve electronics voltage supply is to be switched off by a suitable switching element with sufficient reliability.

Installation recommendations

The maximum pilot flow is given in the technical data. At insufficient pilot oil supply – e.g. because of long distances and/or small diameters – an accumulator can be connected to port XX. See selection guide for correct dimensions.

Selection guide

Size	Capacity [l]	Product type	Max. operating pressure [bar]	Recommended precharge pressure [bar]	Accu port XX
NG40	0.162	ADE016-25R	250	126	G 1/2
NG50	0.243	ADE032-21R	210	126	G 1/2
NG63	0.405	ADE050-21R	210	126	G 3/4
NG80	0.647	ADE075-21R	210	126	G 3/4
NG100	0.944	ADE100-21R	210	126	G 3/4
NG125	on request				G 1

Suction port SP: Contact Parker for installation recommendation.

Block circuit diagram electronics

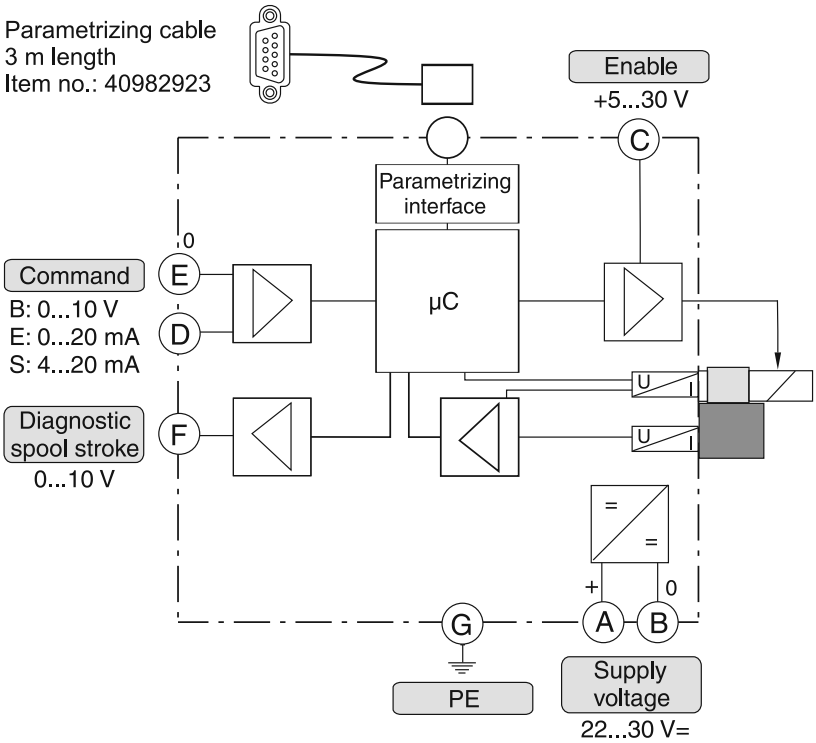

Connection diagrams electronics

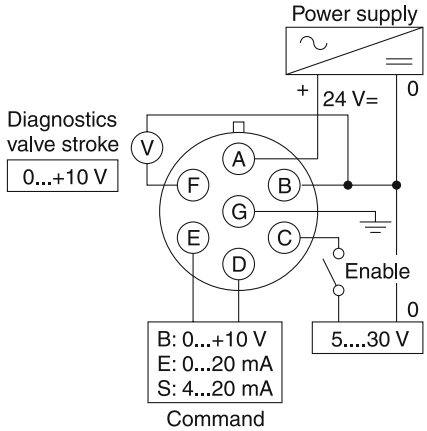

Female connector
(EMC conform)

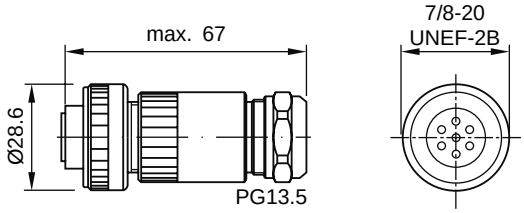

ID no. 5004072

Angle female connector
(EMC conform)

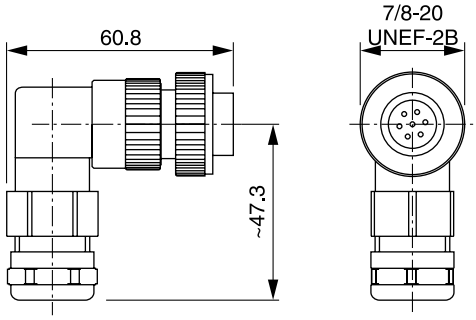

ID no. 5005160

Please order plugs separately.

TDP UK.INDD CM 16.04.15

NG25

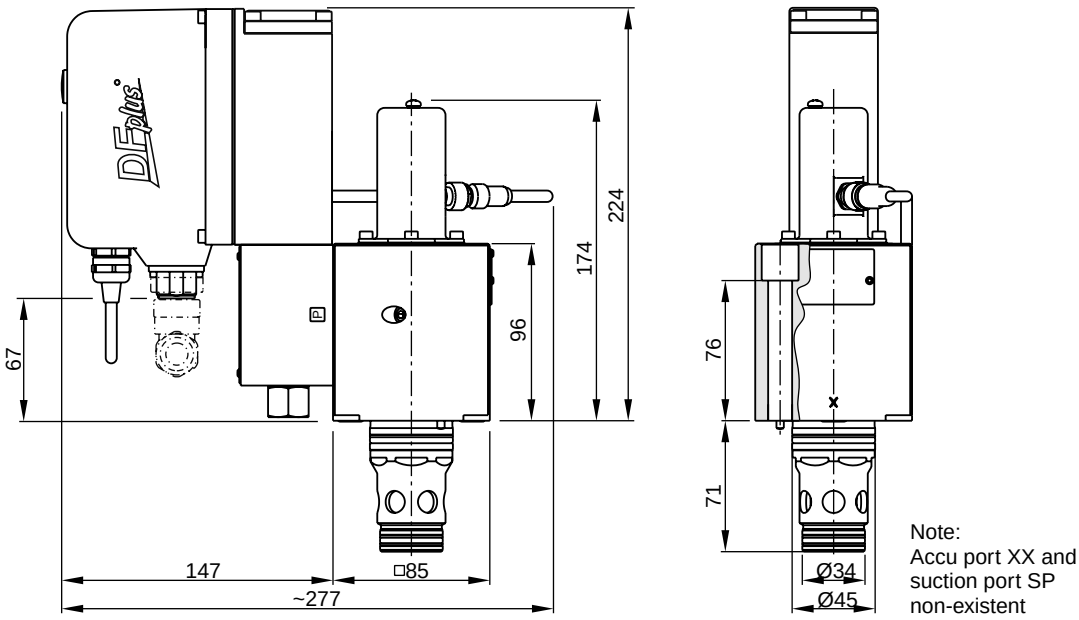

NG32

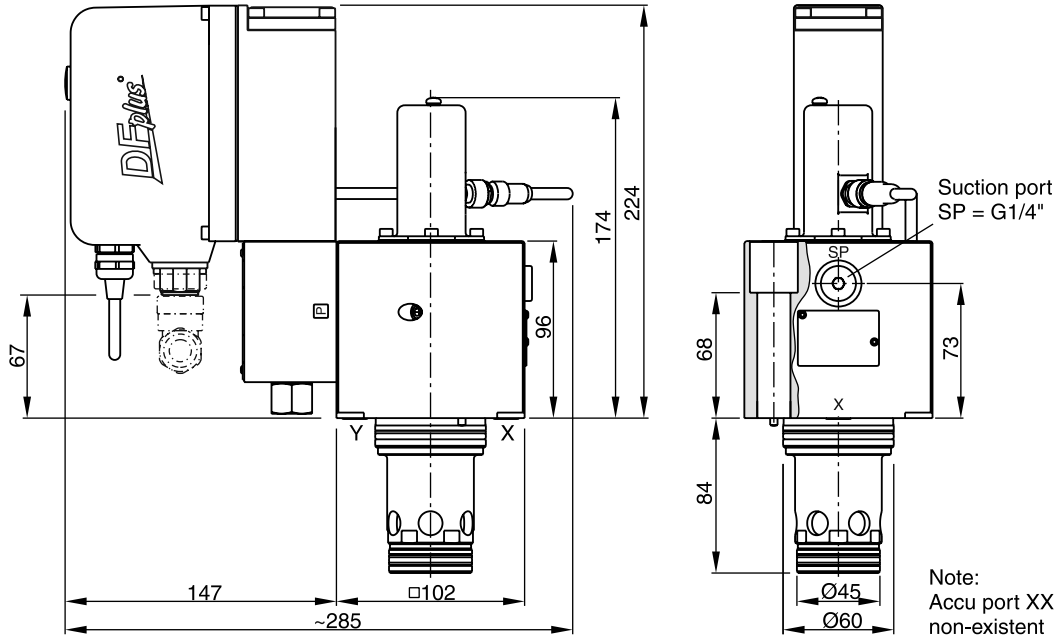

NG	Bolt kit -			Kit NBR	Kit FPM
25	BK504	4 x M12x100 ISO 4762-12.9	108 Nm	SK-TDP025EN30	SK-TDP025EV30
32	BK529	4 x M16x100 ISO 4762-12.9	264 Nm	SK-TDP032EN30	SK-TDP032EV30

TDP UK.INDD CM 16.04.15

NG40

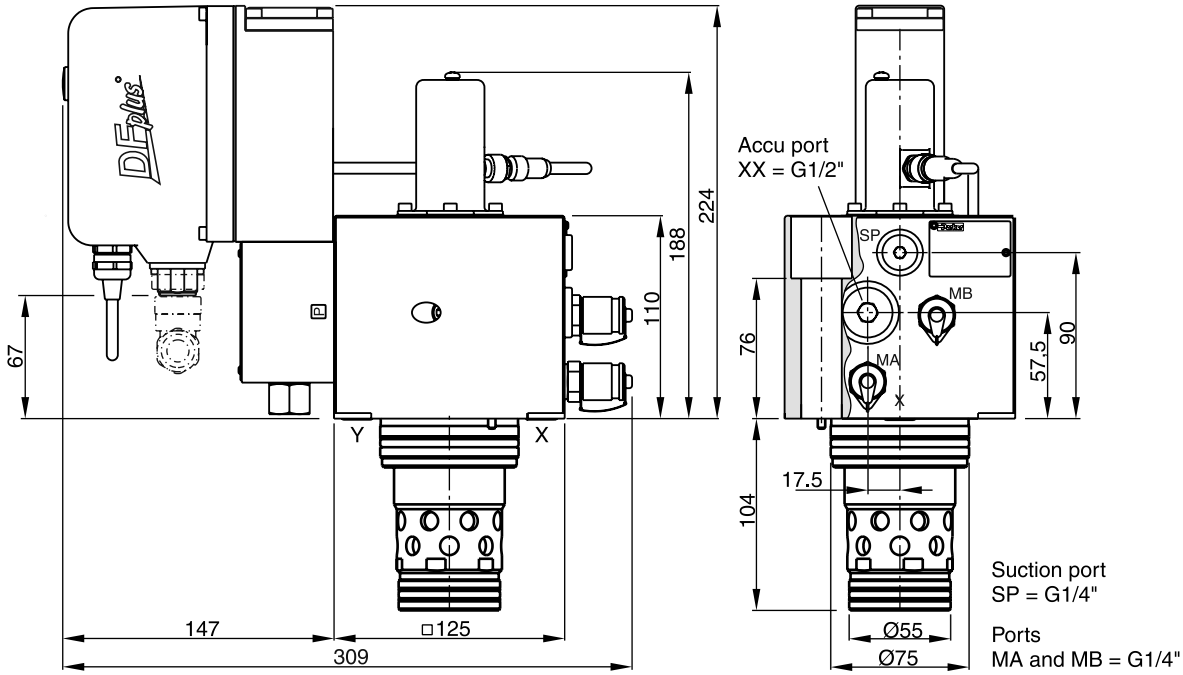

NG50

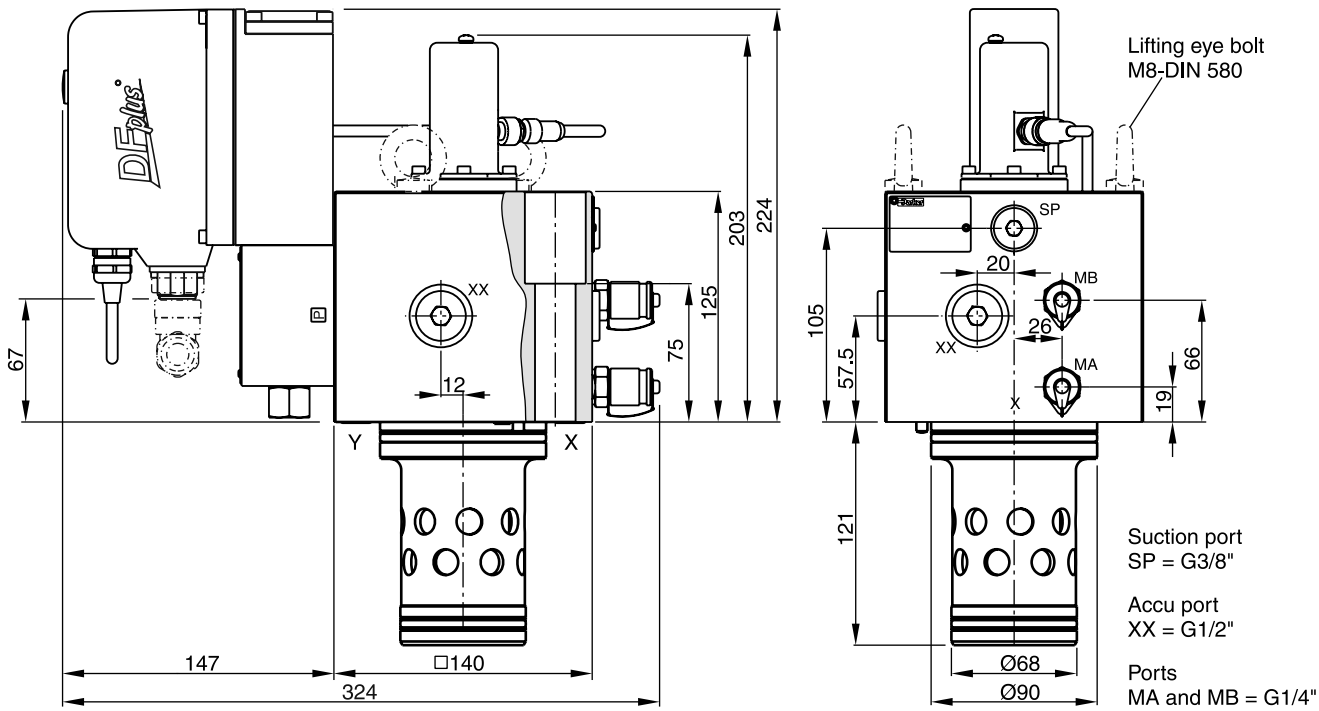

Lifting thread for disassembly M12

NG	Bolt kit -		Kit NBR	Kit FPM
40	BK481 4 x M20x110 ISO 4762-12.9	517 Nm	SK-TDP040EN30	SK-TDP040EV30
50	BK481 4 x M20x110 ISO 4762-12.9	517 Nm	SK-TDP050EN30	SK-TDP050EV30

TDP UK.INDD CM 16.04.15

NG63

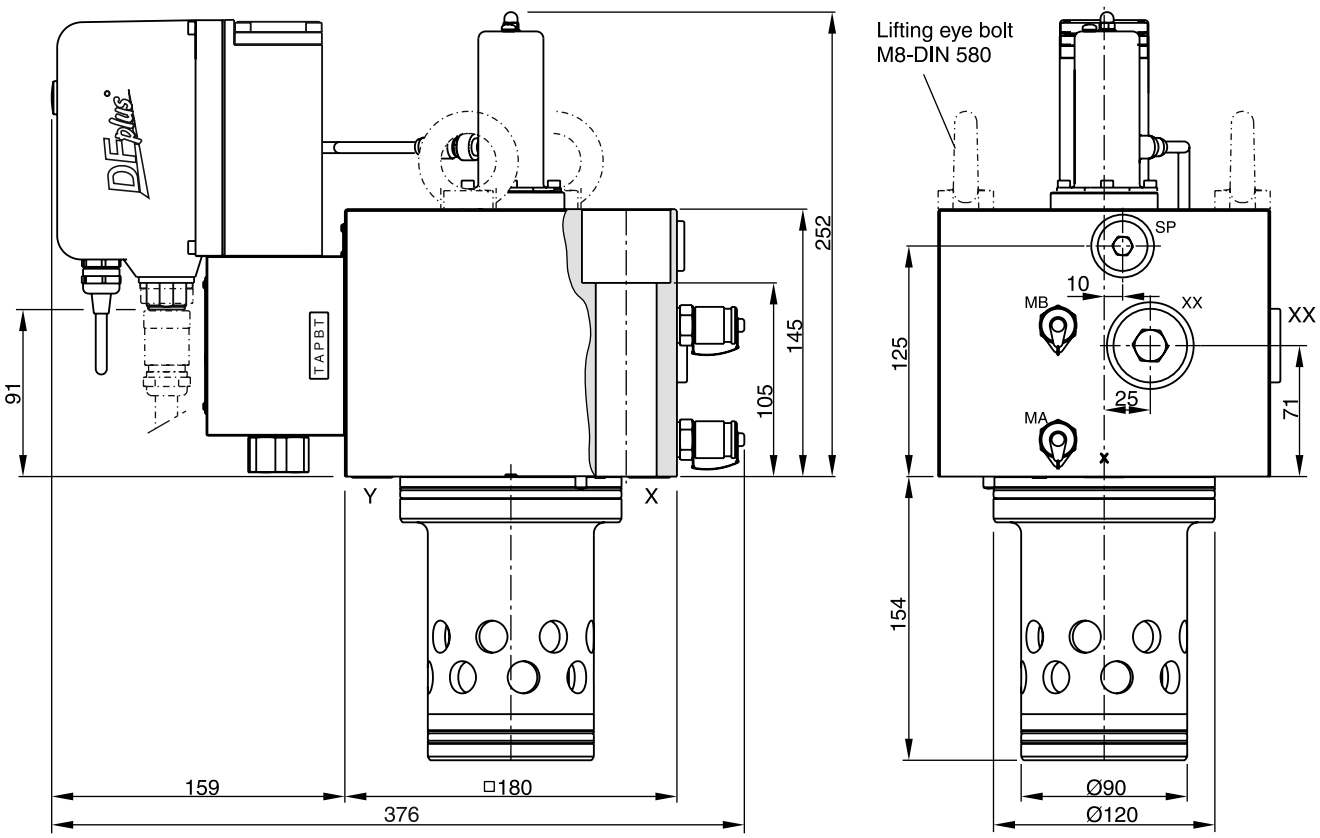

Suction port SP = G1/2"
Accu port XX = G3/4"
Ports MA and MB = G1/4"

Lifting thread for disassembly M12

8

NG	Bolt kit -		Kit NBR	Kit FPM
63	BK518 4 x M30x160 ISO 4762-12.9	1775 Nm	SK-TDP063EN30	SK-TDP063EV30

TDP UK.INDD CM 16.04.15

NG80

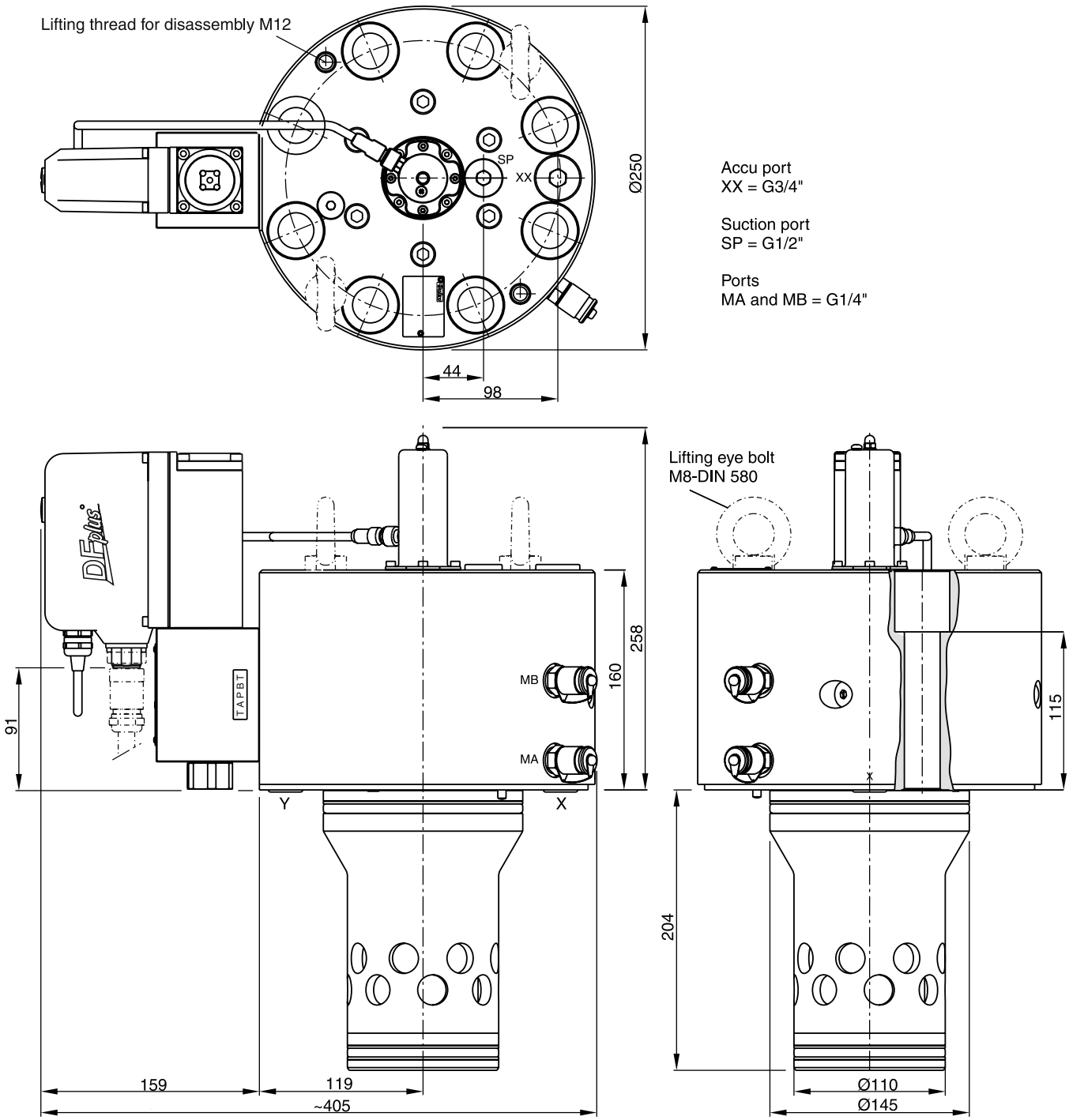

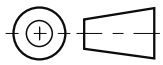

NG	Bolt kit -		Kit NBR	Kit FPM
80	BK530 8x M24x160 ISO 4762-12.9	890 Nm	SK-TDP080EN30	SK-TDP080EV30

TDP UK.INDD CM 16.04.15

NG100

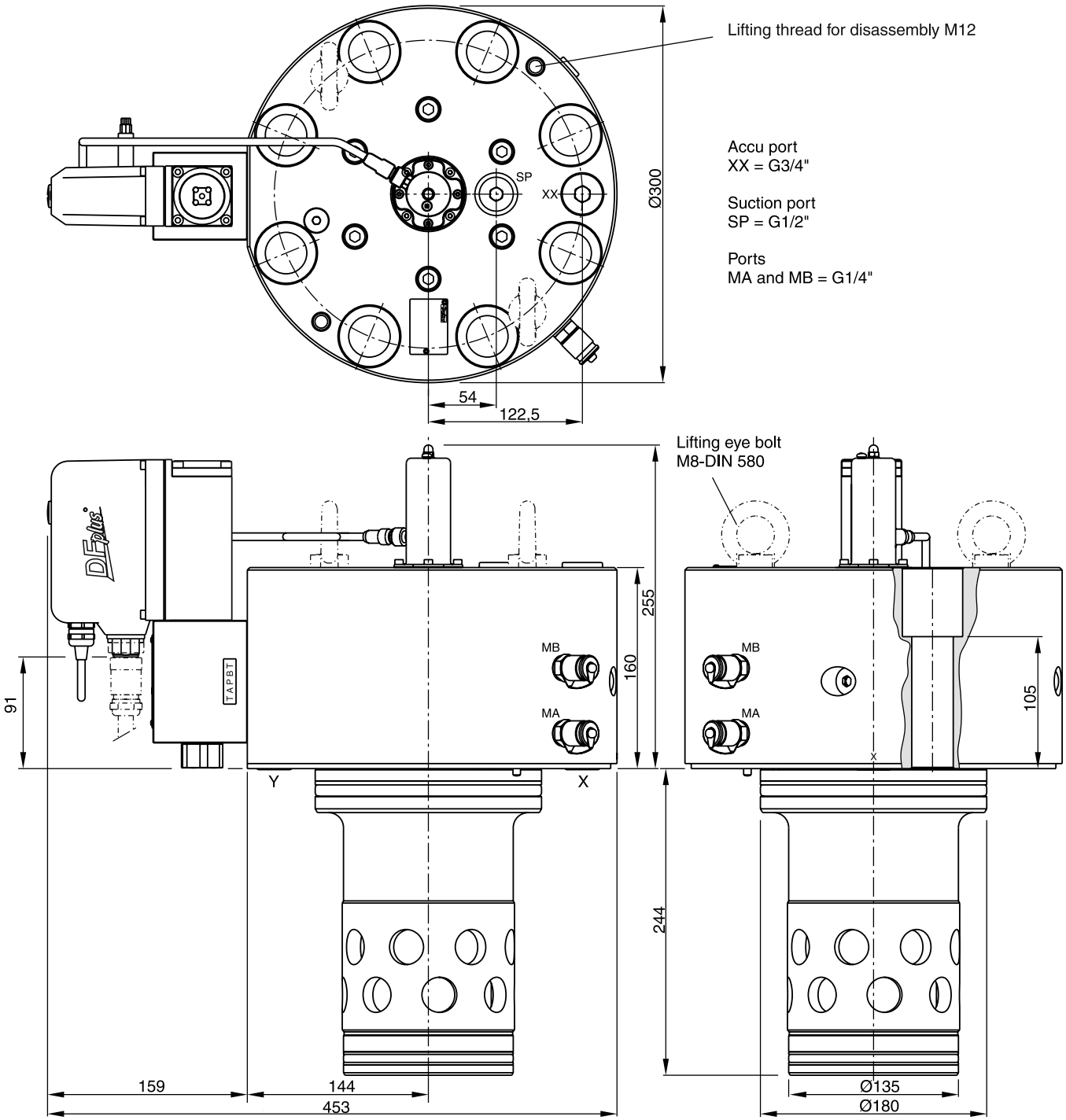

NG	Bolt kit -		Kit NBR	Kit FPM
100	BK531 8x M30x150 ISO 4762-12.9	1775 Nm	SK-TDP100EN30	SK-TDP100EV30

TDP UK.INDD CM 16.04.15

NG125

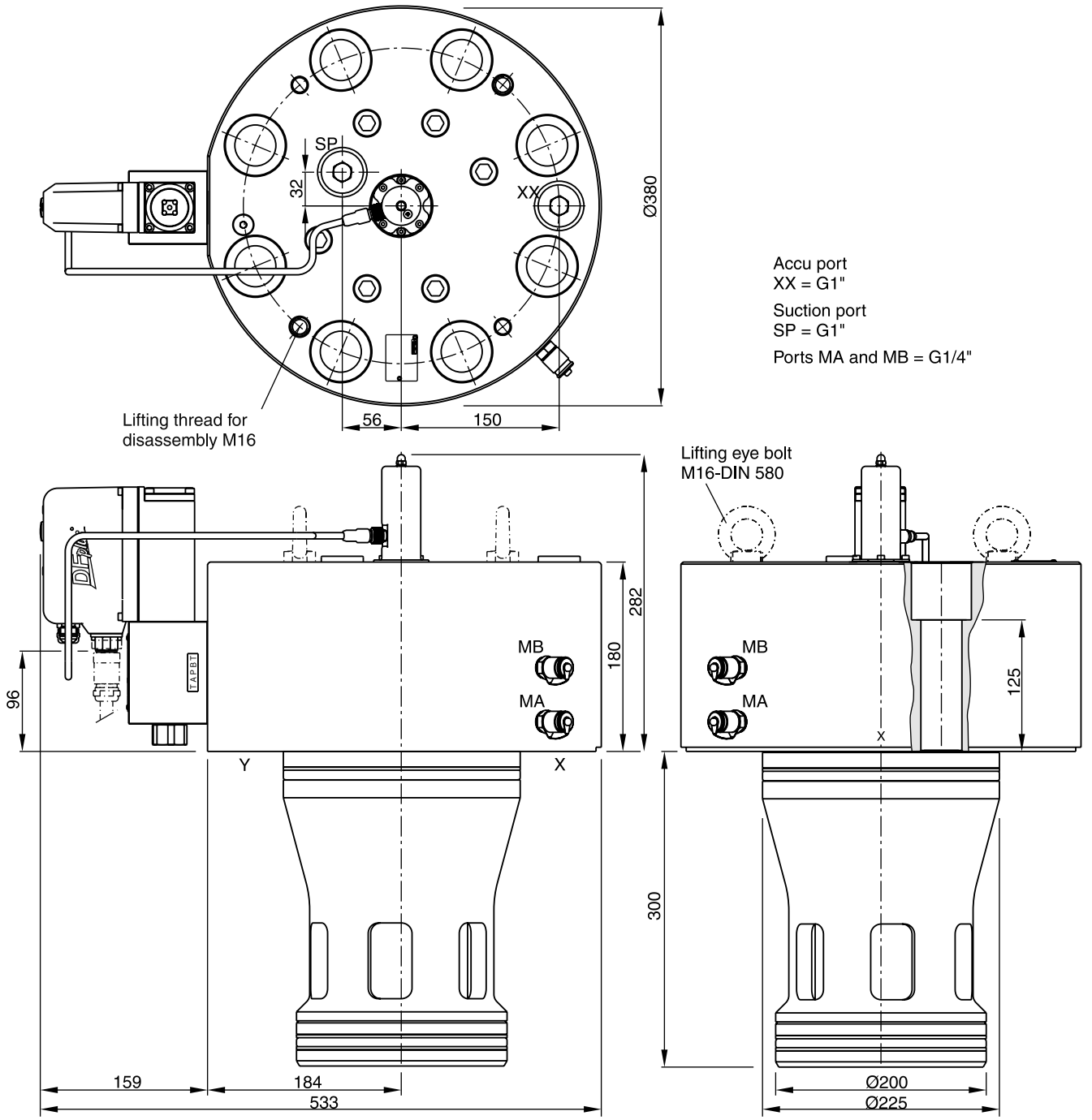

NG	Bolt kit -		Kit NBR	Kit FPM
125	BK537 8x M36x180 ISO 4762	3100 Nm	SK-TDP125EN30	SK-TDP125EV30

TDP UK.INDD CM 16.04.15

Code: ISO 7368-B*-*-2-A/B
NG25 to NG63

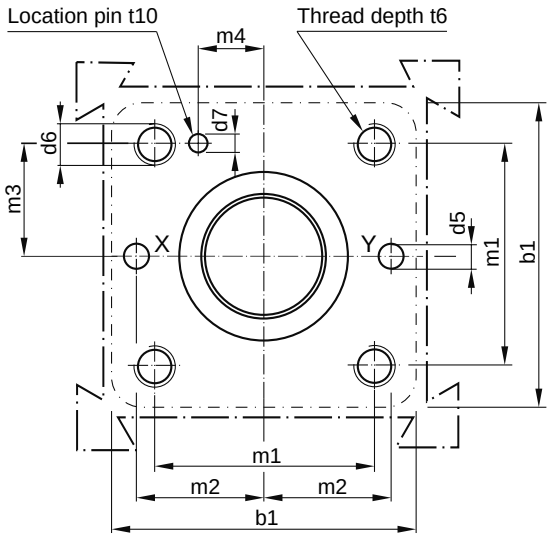

Code: ISO 7368-B*-*-2-A (except for size NG125)
NG80 to NG125

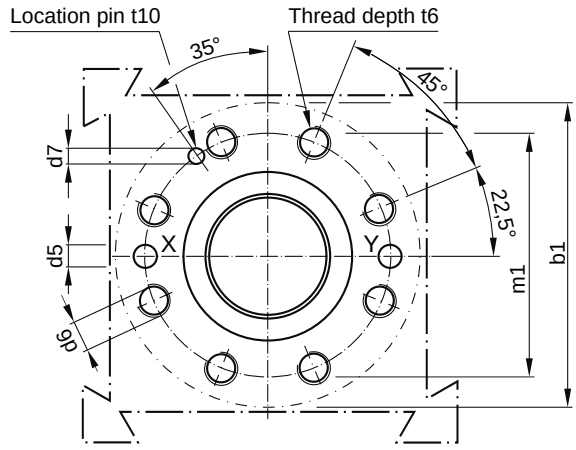

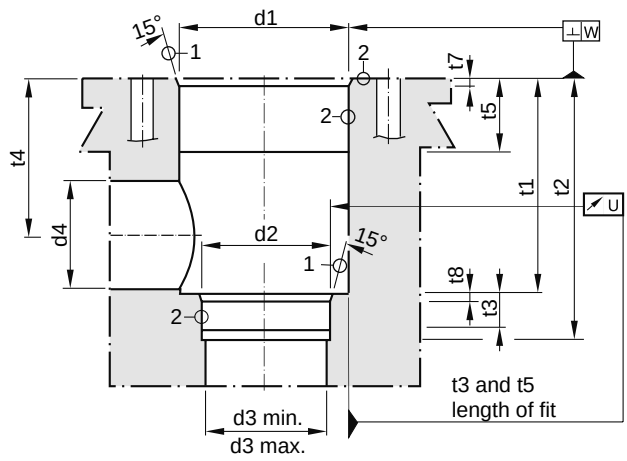

Required surface finish:

① = $\sqrt{R_{max}16}$, ② = $\sqrt{R_{max}8}$

Deviating from ISO 7368 it is advisable to increase the diameters d3, d4 and d5.

Size	b1	d1 H7	d2 H7	d3	d3 max	d4 max[1)]	d5 max	d6	d7 H13	m1±0.2	m2±0.2	m3±0.2
25	85	45	34	25	27	32	6	M12	4	58	33	29
32	102	60	45	32	44	50	8	M 16	6	70	41	35
40	125	75	55	40	54	63	10	M 20	6	85	50	42.5
50	140	90	68	50	67	80	10	M 20	8	100	58	50
63	180	120	90	63	89	100	12	M 30	8	125	75	62.5
80	250	145	110	80	109	110	16	M 24	10	200	—	—
100	300	180	135	100	134	150	20	M 30	10	245	—	—
125	380	225	200	125	150	150	32	M 36	9	300	—	—

Size	m4±0.2	t1+0.5	t2+1	t3	t4	t4 max[1)]	t5	t6	t7	t8	t10	U	W
25	16	58	72	12	44	40.5	30	35	25	25	10	0.03	0.05
32	17	70	85	13	52	44	15	35	2.5	2.5	10	0.03	0.1
40	23	87	105	15	64	54	15	45	3	3	10	0.05	0.1
50	30	100	122	17	72	59	17	45	4	3	10	0.05	0.1
63	38	130	155	20	95	78	19	65	4	4	10	0.05	0.2
80	—	175	205	25	130	115	32	50	5	5	10	0.05	0.2
100	—	210	245	29	155	133	32	53	5	5	10	0.05	0.2
125	—	257	300 $^{+0.15}$	31	192	180	40	62	5.5	7	10	0.05	0.2

[1)] Only in combination with d4max and t4max.

2-way high-response valves series TEP base on the TDP range. Additionally, TEP valves are equipped with a direction control valve for shutting off the pilot system.

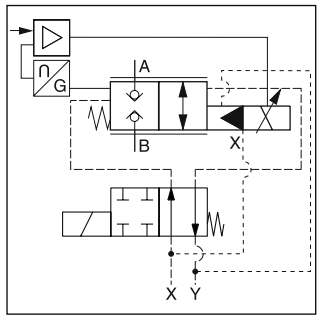

TEP040

Features

- Active pilot operated 2-way high-response valve with shut-off valve
- Flow directions A-B and B-A
- Cavity and mounting pattern according to ISO 7368 (except for size NG125)
- Fast step responses
- Completely mounted and adapted unit with integrated electronics
- 8 sizes NG25 up to NG125
- Shut-off function

Structure and function

In the de-energized position of the shut-off valve, the upper pilot control surface of the main spool is pressurized, the lower one is relieved to tank. Without pilot pressure, the main spool is closed by spring force. Independent of the DFplus pilot valve, the main spool remains always closed, if the shut-off valve is not activated.

If the solenoid of the shut-off valve is energized, the position of the main spool is controlled by DFplus pilot valve and LVDT.

The shut-off valve can be ordered with position control optionally.

TEP040

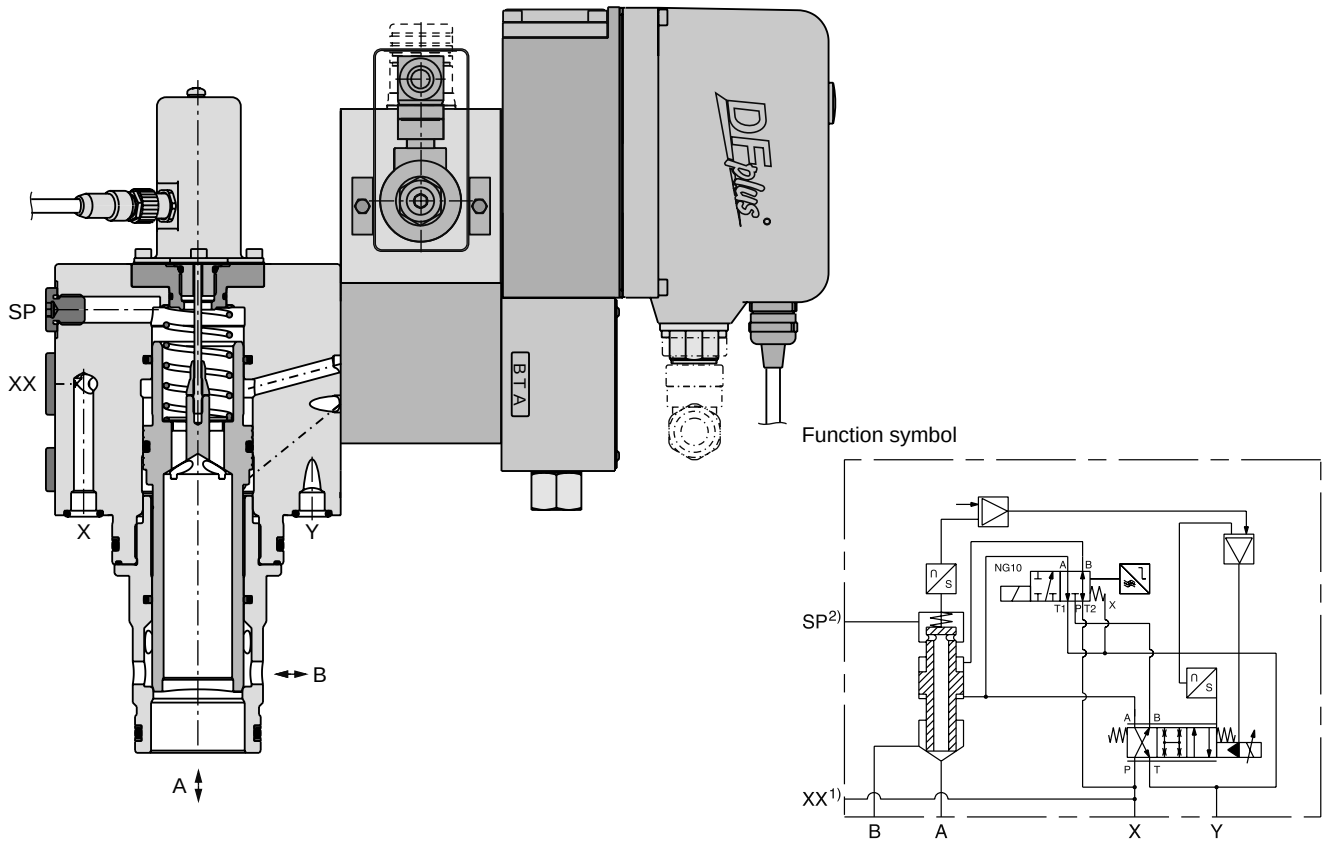

1) NG25 and NG32 without accu port XX.
2) NG25 without suction port SP.

Ordering code

TEP	☐	E	☐	9	9	C	2	☐	☐	☐	J	☐
2-way high-response valve with LVDT	**Nominal size**	**Slip-in cartridge**	**Performance**	**Sinus poppet**	**Nominal flow**	**Flow direction B → A A → B**	**Pilot oil** (supply external, drain external)	**Seal**	**Command signal**	**Accessories**	**Solenoid check valve 24 V= / 1.25 A**	**Design series** (not required for ordering)

Code	Nominal size
025	NG25
032	NG32
040	NG40
050	NG50
063	NG63
080	NG80
100	NG100
125	NG125

Code	Performance
D	VCD® dynamics especially for closed loop applications
H	VCD® dynamics especially for controlled applications

Code	Accessories shut-off valve
0	without position control
7	with position control

Code	Command signal
B	0...+10 V
E	0...+20 mA
S	4...+20 mA

Code	Seal
N	NBR
V	FPM
H	for HFC fluid

The DFplus pilot valve is also available with EtherCAT interface, see chapter 3, D*FP and D*1FP with EtherCAT.

Please order connector separately
Angle female connector must be used for NG25 to NG50.

Performance curves
Characteristic flow/signal line

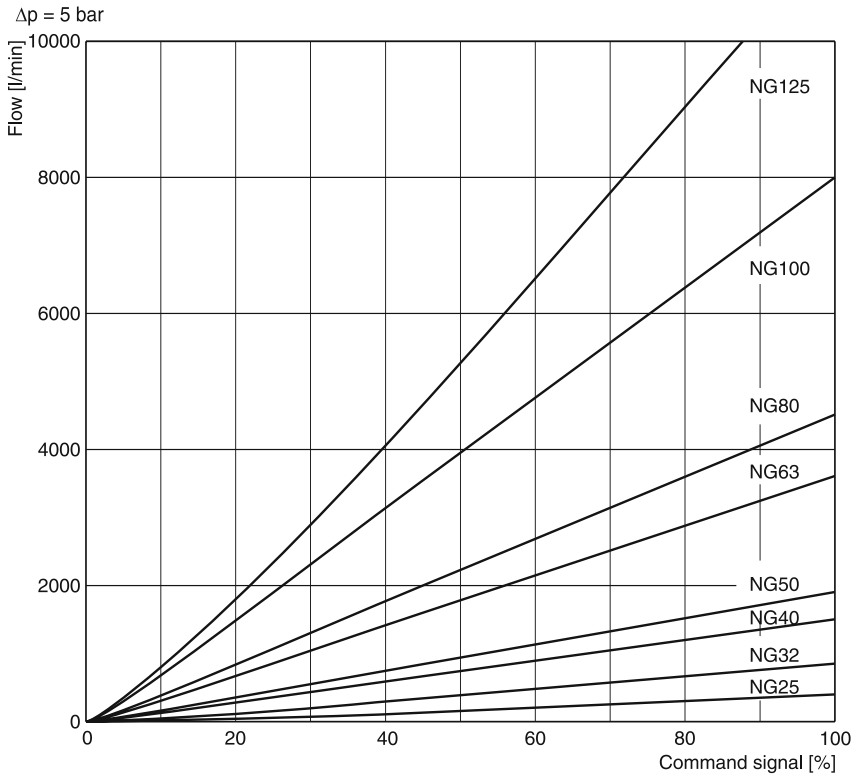

Opening point factory set to 3 %

Flow at different Δp $Q_{actual} = Q_{nominal} \cdot \sqrt{\Delta p_{actual} / \Delta p_{nominal}}$

Characteristic curve measured with HLP46 at 50 °C.

TEP UK.indd CM 16.04.15

General									
Design		Proportional throttle valve, slip-in cartridge according to ISO 7368 (except for size NG125)							
Nominal size	DIN	**NG25**	**NG32**	**NG40**	**NG50**	**NG63**	**NG80**	**NG100**	**NG125**
Mounting position		unrestricted							
Ambient temperature	[°C]	-20...+50							
$MTTF_D$ value [1)]	[years]	75							
Weight	[kg]	11	13	15	26	52	105	157	193
Vibration resistance	[g]	10 sinus 5...2000 Hz acc. IEC 68-2-6 30 random noise 20...2000 Hz acc. IEC 68-2-36 15 shock acc. IEC 68-2-27							
Hydraulic									
Max. operating pressure	[bar]	Ports A, B, X and SP up to 350; XX observe accumulator pressure rating; port Y: max. 35							
Fluid		Hydraulic oil according to DIN 51524							
Fluid temperature	[°C]	-20...+60 (NBR: -25...+60)							
Viscosity recommended	[cSt] / [mm²/s]	30 ... 80							
Viscosity permitted	[cSt] / [mm²/s]	20 ... 400							
Filtration		ISO 4406 (1999); 18/16/13							
Nominal flow at Δp= 5 bar	[l/min]	420	850	1500	1900	3600	4500	8000	11500
Recommended max. flow	[l/min]	800	2000	3000	4500	8000	13000	20000	29000
Flow direction		B to A / A to B							
Pilot pressure	[bar]	must be as high as system pressure							
Pilot oil supply		external via X							
Pilot oil drain		external via Y							
Leakage in pilot valve at 100 bar	[ml/min]	<400							
Pilot valve size		NG06				NG10			
Max. pilot flow at 140 bar pilot pr.	[l/min]	23	30	40	40	70	80	100	100
Static/dynamic									
(for optimal dynamics see installation recommendation)									
Step response at pilot press. >140 bar	[ms]	10.5	12	14	20	17	23	28	46
Frequency response at pilot press. >140 bar									
Amplitude -3 dB; 10 % ±5 %	[Hz]	95	80	74	66	52	46	41	23
Phase -90°; 10 % +5 %	[Hz]	85	63	59	52	56	51	47	45
Hysteresis	[%]	< 0.1							
Sensitivity	[%]	< 0.05							
Temperature drift	[%/K]	< 0.025							

Electrical		
Duty ratio	[%]	100
Protection class		IP65 in accordance with EN 60529 (with correctly mounted plug-in connector)
Supply voltage / ripple	[V]	DC 22 ... 30, electric shut-off at < 19, ripple < 5 % eff., surge free
Current consumption max.	[A]	3.5
Pre-fusing	[A]	4.0 A medium lag
Input signal Voltage	[V]	0...+10, ripple < 0.01 % eff., surge free
Impedance	[kOhm]	100
Current	[mA]	0...+20, ripple <0.01 % eff., surge free
Impedance	[Ohm]	250
Current	[mA]	4...20, ripple <0.01 % eff., surge free <3.6 mA = disable, >3.8 mA = enable on according to NAMUR NE43
Impedance	[Ohm]	250
Differential input max.	[V]	30 for terminal D and E against PE (terminal G) 11 for terminal D and E against 0V (terminal B)
Enable signal	[V]	5...30, Ri = 9 kOhm
Diagnostic signal	[V]	0...+10 / +12.5 error detection, rated max. 5 mA
EMC		EN 61000-6-2, EN 61000-6-4
Electrical connection		6 + PE acc. EN 175201-804
Wiring min.	[mm²]	7 x 1.0 (AWG16) overall braid shield
Wiring length max.	[m]	50

[1)] If valves with onboard electronics are used in safety-related parts of control systems, in case the safety function is requested, the valve electronics voltage supply is to be switched off by a suitable switching element with sufficient reliability.

Installation recommendations

The maximum pilot flow is given in the technical data. At insufficient pilot oil supply - e.g. because of long distances and/or small diameters - an accumulator can be connected to port XX. See selection guide for correct dimensions.

Selection guide

Size	Capacity [l]	Product type	Pressure rating [bar]	Accu port XX
NG40	0.162	ADE016-25R	126	G 1/2
NG50	0.243	ADE032-21R	126	G 1/2
NG63	0.405	ADE050-21R	126	G 3/4
NG80	0.647	ADE075-21R	126	G 3/4
NG100	0.944	ADE100-21R	126	G 3/4
NG125	on request			G 1

Suction port SP: Contact Parker for installation recommendation.

Block circuit diagram electronics

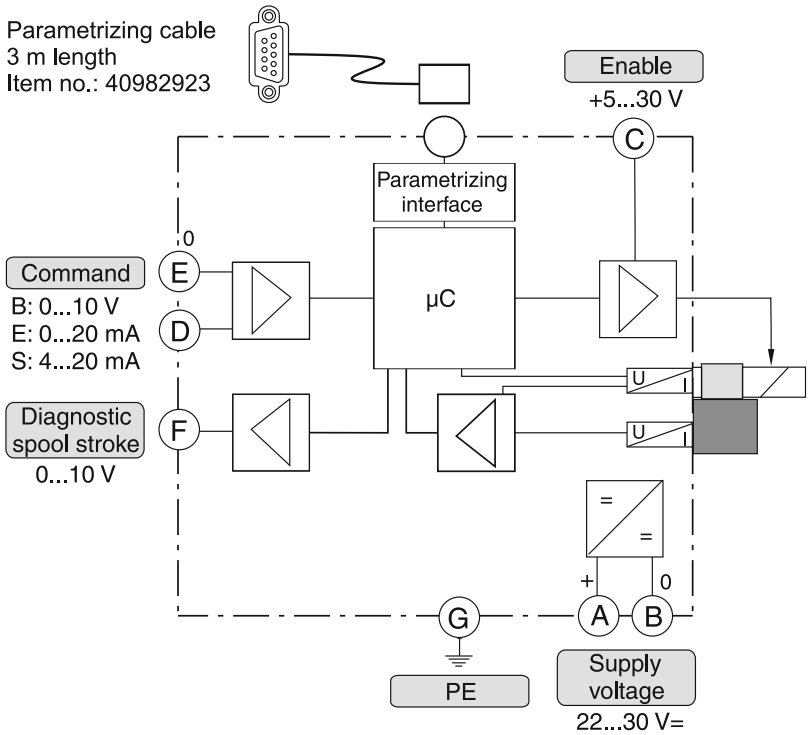

Connection diagrams electronics

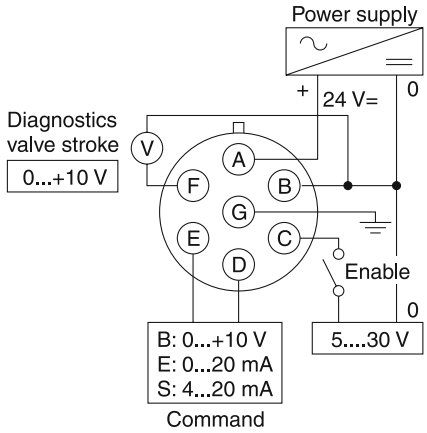

Female connector
(EMC conform)

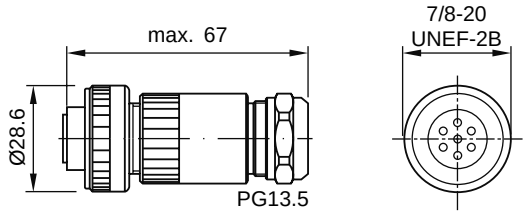

ID no. 5004072

Angle female connector
(EMC conform)

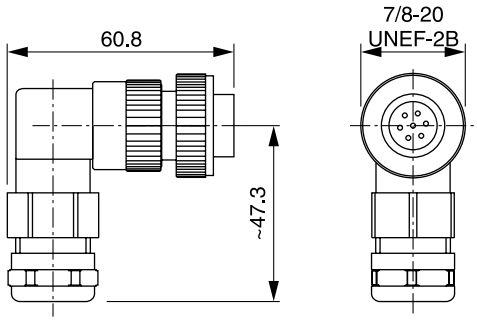

ID no. 5005160

Please order plugs separately.

TEP UK.indd CM 16.04.15

Electrical characteristics of position control as per IEC 61076-2-101 (M12x1)

Protection class		IP 65 in accordance with EN 60529 (with correctly mounted plug-in connector)
Ambient temperature	[°C]	0...+50
Supply voltage Us / ripple	[V]	18...42 / 10 %
Current consumption without load	[mA]	≤ 30
Max. output current per channel, ohmic	[mA]	400
Min. output load per channel, ohmic	[kOhm]	100
Max. output drop at 0.2 A	[V]	≤ 1.1
Max. output drop at 0.4 A	[V]	≤ 1.6
EMC		EN50081-1 / EN50082-2
Max. tolerance ambient field strength	[A/m]	<1200
Min. distance to next AC solenoid	[m]	>0.1
Interface		M12x1
Wiring min.	[mm²]	5 x 0.25 braid shield recommended
Wiring length max.	[m]	50 recommended

M12 pin assignment

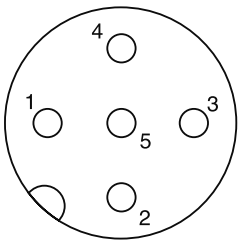

1 Us 18...42 V
2 Out B: normally open
3 0 V
4 Out A: normally closed
5 Earth ground

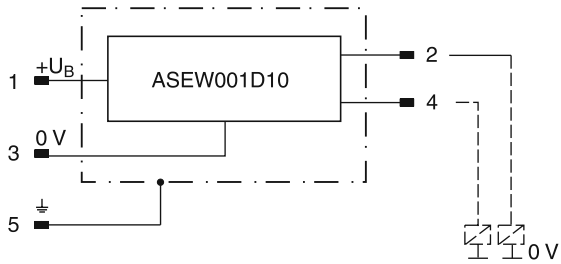

8

NG25

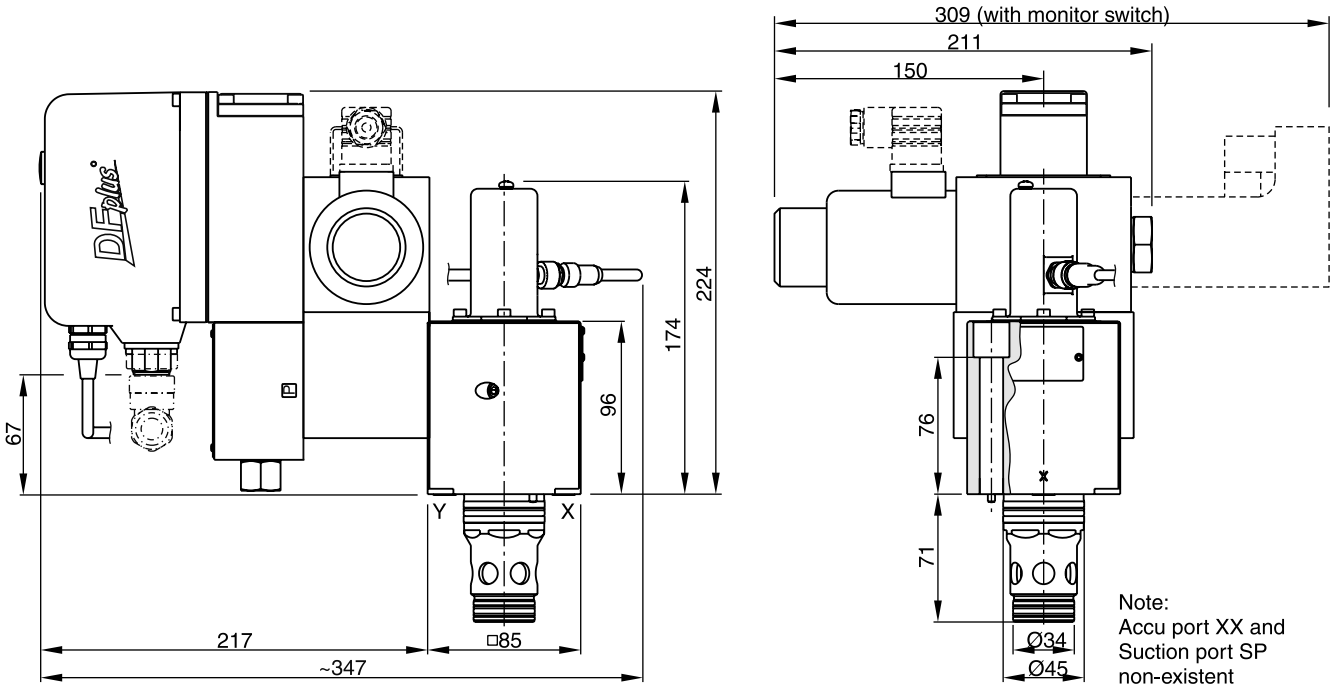

NG32

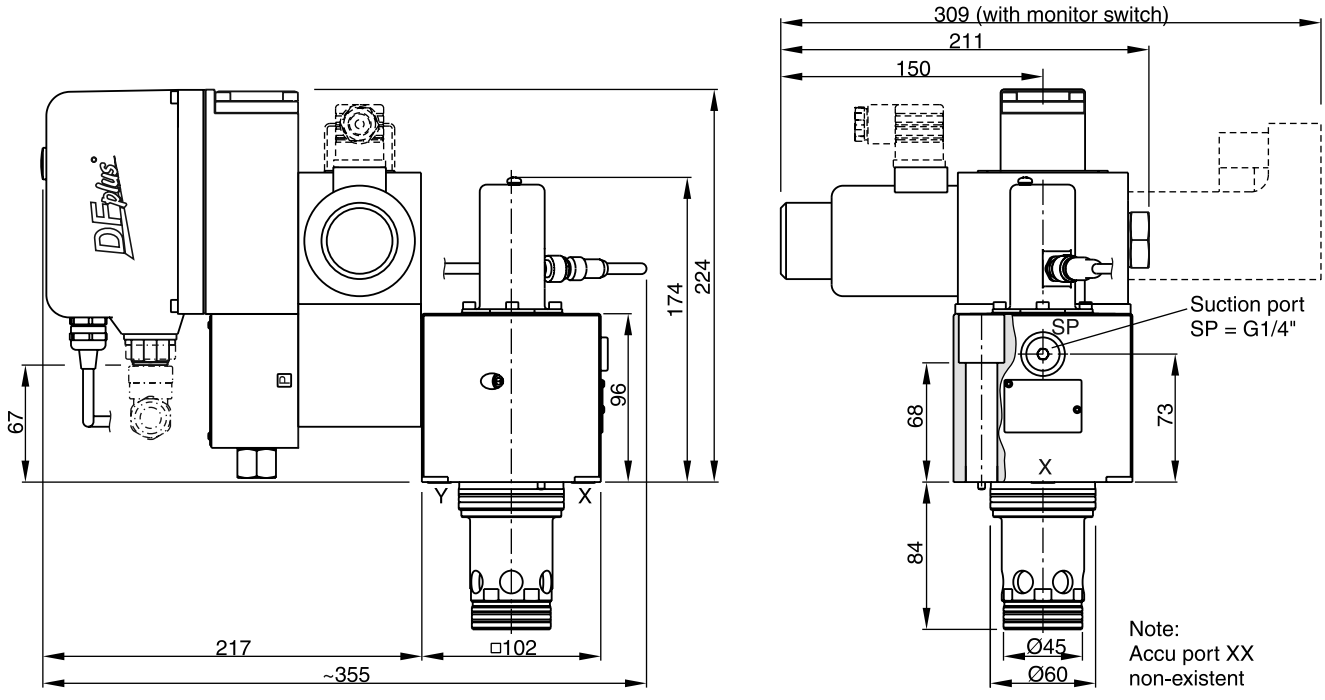

NG	Bolt kit -		Kit NBR	Kit FPM
25	BK504 4 x M12x100 ISO 4762-12.9	108 Nm	SK-TEP025EN30	SK-TEP025EV30
32	BK529 4 x M16x100 ISO 4762-12.9	264 Nm	SK-TEP032EN30	SK-TEP032EV30

TEP UK.indd CM 16.04.15

NG40

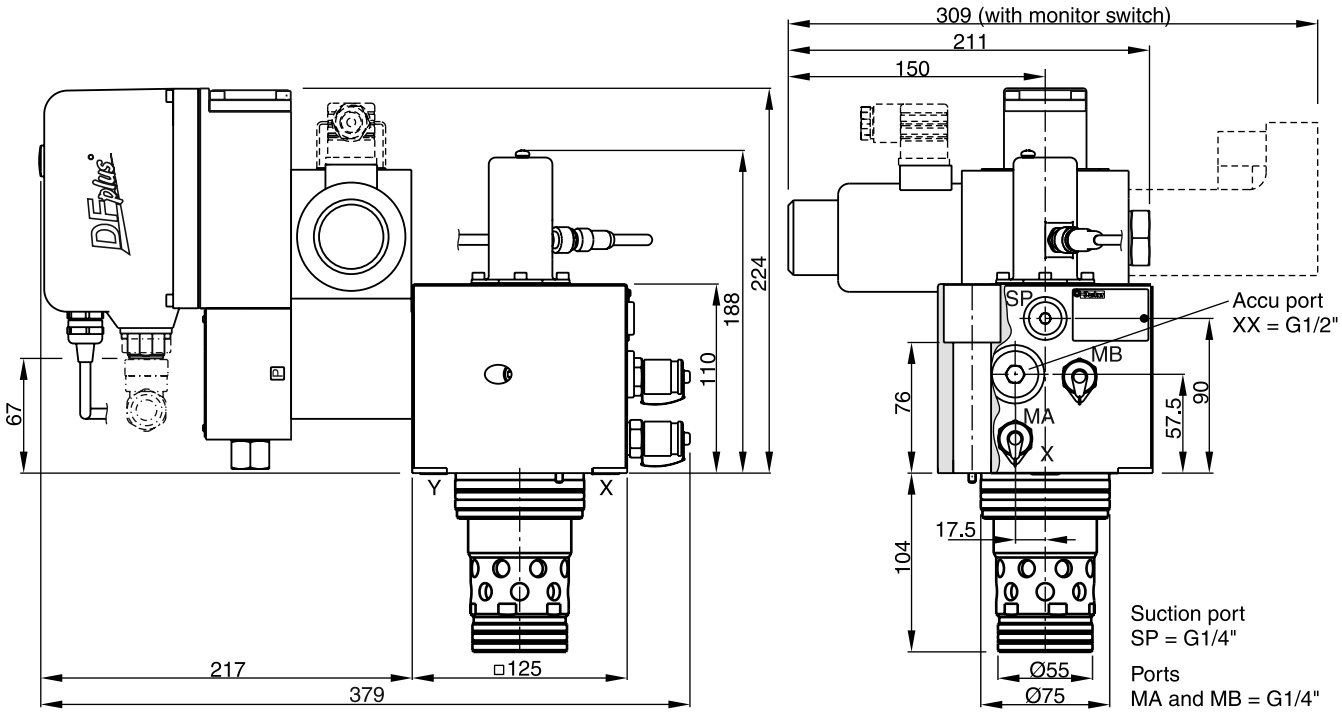

NG50

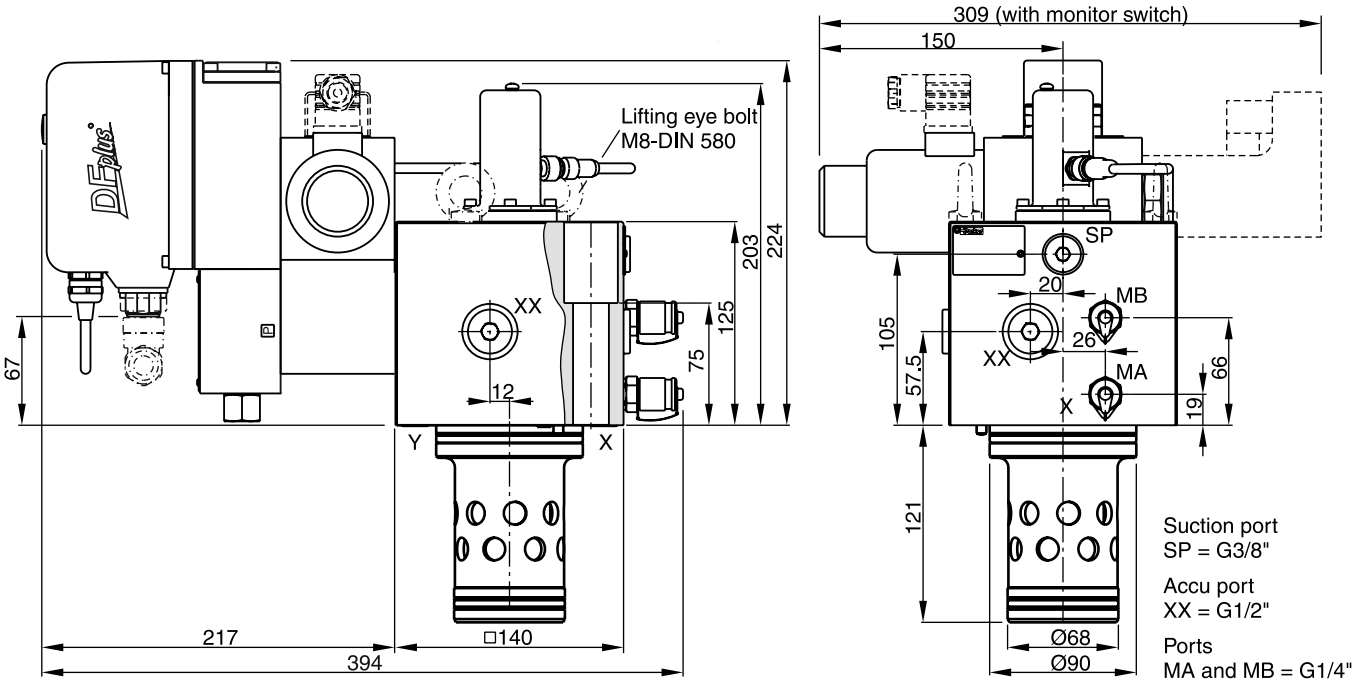

Lifting thread for disassembly M12

NG	Bolt kit -		Kit NBR	Kit FPM
40	BK481 4 x M20x110 ISO 4762-12.9	517 Nm	SK-TEP040EN30	SK-TEP040EV30
50	BK481 4 x M20x110 ISO 4762-12.9	517 Nm	SK-TEP050EN30	SK-TEP050EV30

TEP UK.indd CM 16.04.15

NG63

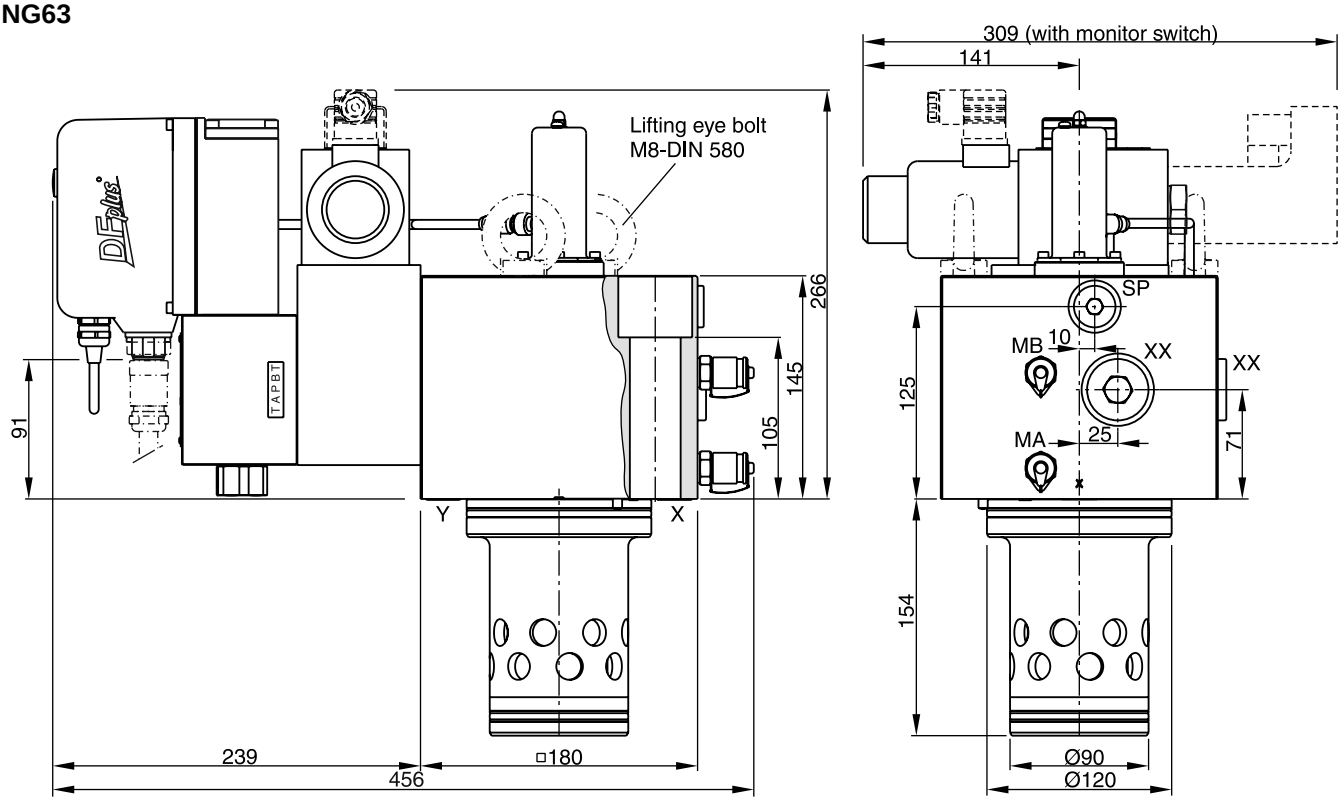

Suction port SP = G1/2"
Accu port XX = G3/4"
Ports MA and MB = G1/4"

Lifting thread for disassembly M12

8

NG	Bolt kit -		Kit NBR	Kit FPM
63	BK518 4x M30x160 ISO 4762-12.9	1775 Nm	SK-TEP063EN30	SK-TEP063EV30

NG80

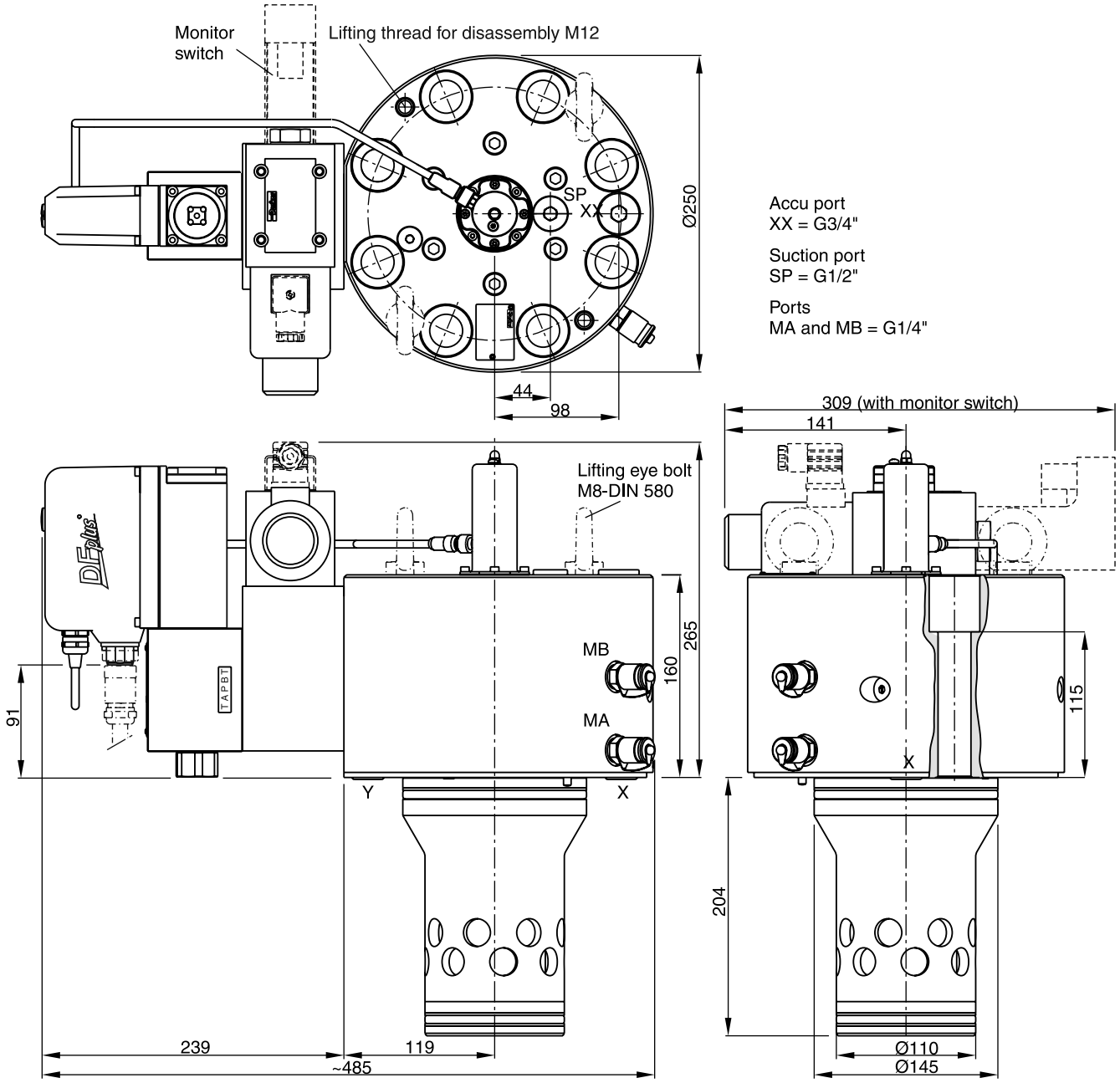

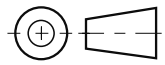

NG	Bolt kit -		Kit NBR	Kit FPM
80	BK530 8x M24x160 ISO 4762-12.9	890 Nm	SK-TEP080EN30	SK-TEP080EV30

TEP UK.indd CM 16.04.15

NG100

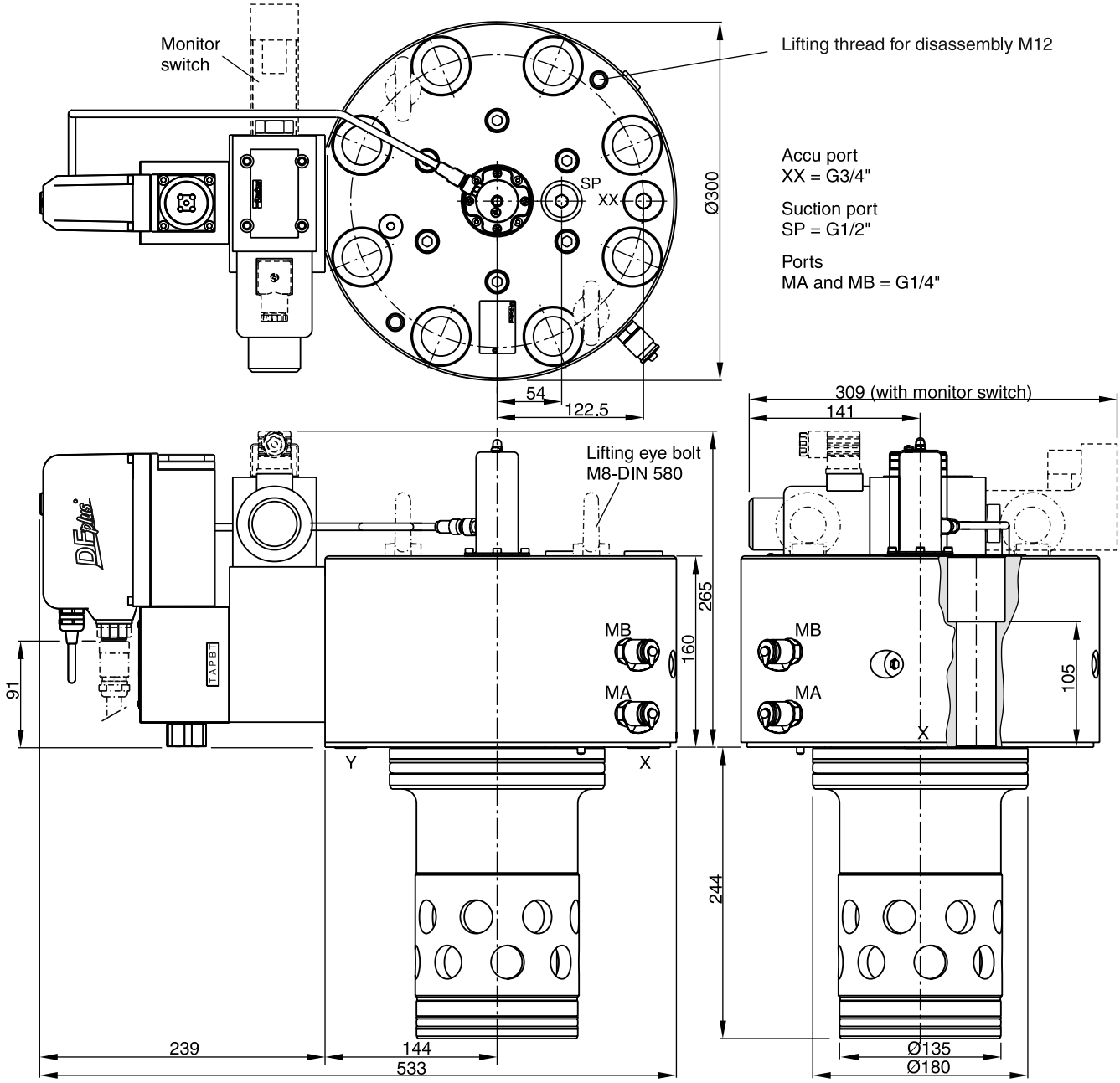

NG	Bolt kit -		Kit NBR	Kit FPM
100	BK531 8x M30x150 ISO 4762-12.9	1775 Nm	SK-TEP100EN30	SK-TEP100EV30

TEP UK.indd CM 16.04.15

NG125

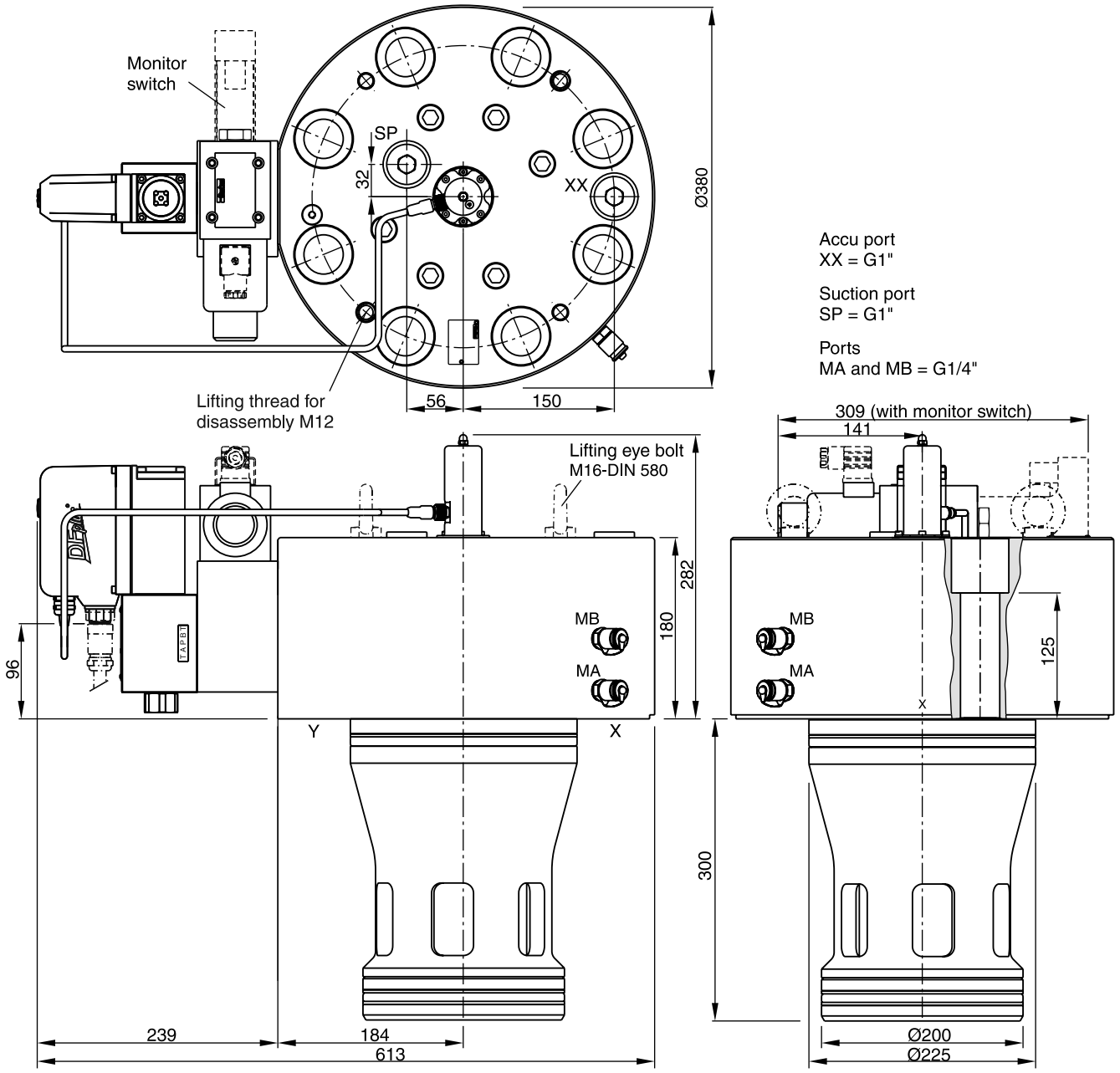

NG	Bolt kit -		Kit NBR	Kit FPM
125	BK537 8x M36x180 ISO 4762-12.9	3100 Nm	SK-TEP125EN30	SK-TEP125EV30

TEP UK.indd CM 16.04.15

Code: ISO 7368-B*-*-2-A/B
NG25 to NG63

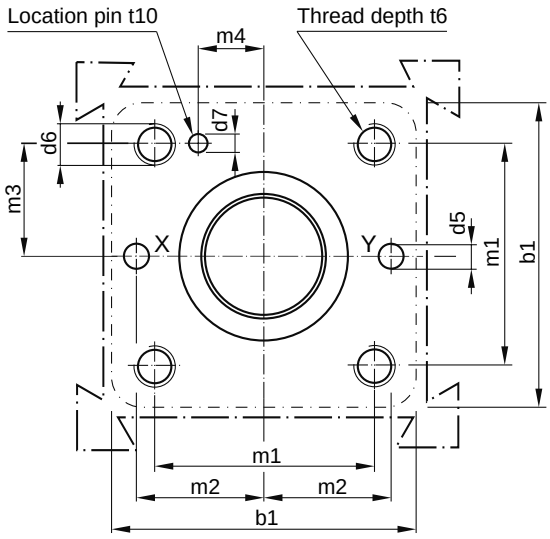

Code: ISO 7368-B*-*-2-A (except for size NG125)
NG80 to NG125

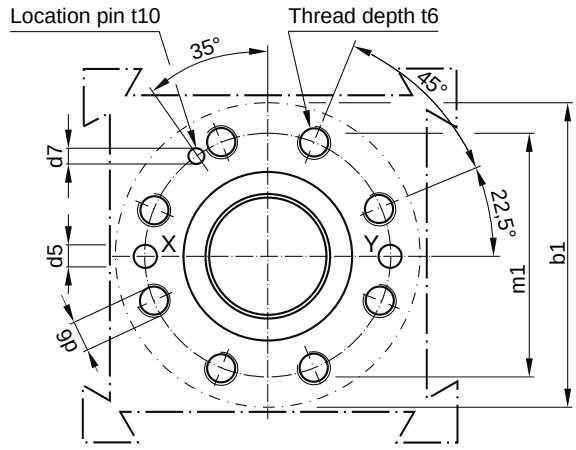

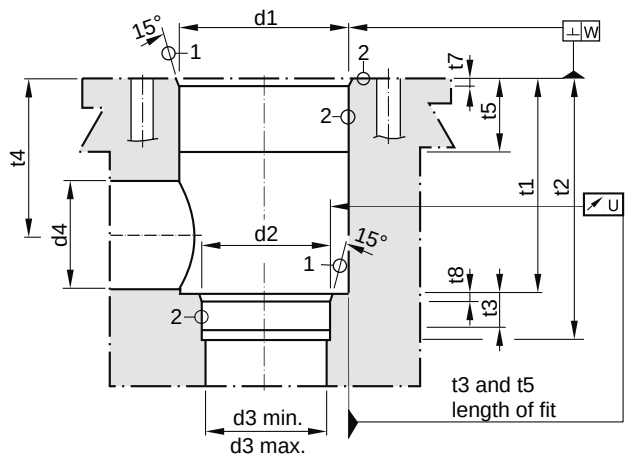

Required surface finish:

$① = \sqrt{R_{max}16}, ② = \sqrt{R_{max}8}$

Deviating from ISO 7368 it is advisable to increase the diameters d3, d4 and d5.

Size	b1	d1 H7	d2 H7	d3	d3 max	d4 max[1)]	d5 max	d6	d7 H13	m1±0.2	m2±0.2	m3±0.2
25	85	45	34	25	27	32	6	M 12	4	58	33	29
32	102	60	45	32	44	50	8	M 16	6	70	41	35
40	125	75	55	40	54	63	10	M 20	6	85	50	42.5
50	140	90	68	50	67	80	10	M 20	8	100	58	50
63	180	120	90	63	89	100	12	M 30	8	125	75	62.5
80	250	145	110	80	109	110	16	M 24	10	200	—	—
100	300	180	135	100	134	150	20	M 30	10	245	—	—
125	380	225	200	125	150	150	32	M 36	9	300	—	—

Size	m4±0.2	t1+0.5	t2+1	t3	t4	t4 max[1)]	t5	t6	t7	t8	t10	U	W
25	16	58	72	12	44	40.5	30	35	25	25	10	0.03	0.05
32	17	70	85	13	52	44	15	35	2.5	2.5	10	0.03	0.1
40	23	87	105	15	64	54	15	45	3	3	10	0.05	0.1
50	30	100	122	17	72	59	17	45	4	3	10	0.05	0.1
63	38	130	155	20	95	78	19	65	4	4	10	0.05	0.2
80	—	175	205	25	130	115	32	50	5	5	10	0.05	0.2
100	—	210	245	29	155	133	32	53	5	5	10	0.05	0.2
125	—	257	300 $^{+0.15}$	31	192	180	40	62	5.5	7	10	0.05	0.2

[1)] Only in combination with $d4_{max}$ and $t4_{max}$

TEP UK.indd CM 16.04.15

The 3-way high-response valves series TPQ are used in applications where high flow has to be precisely controlled at maximum dynamics. Typical applications are die casting, injection moulding and hydraulic presses.

TPQ 040

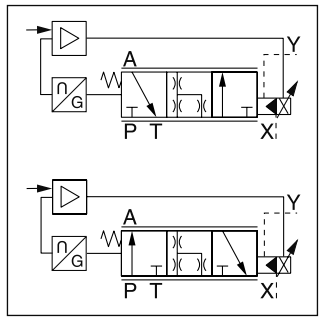

Function

TPQ has a 2-stage design consisting of a DFplus pilot valve and a main stage with spool and LVDT.

With the DFplus pilot valve the TPQ achieves extremely fast response times: from 7 ms (NG25) up to 20 ms (NG80) with an accuracy of <0.1 % of the nominal flow. The pilot valve actively controls the spool – independent of the pressure conditions in the main ports.

It is basically required that the pilot pressure is at the level of the system pressure. At low system pressure the pilot pressure should be min. 140 bar, when high valve dynamics are desired.

The integrated electronics in the pilot of the TPQ has two control loops for the main cone and the pilot spool.

Features

- Active pilot operated 3-way high-response valve
- Cavity according to Parker house norm
- Fast step response
- Flow direction A to T and P to A
- Completely mounted adapted unit with integrated electronics
- 6 sizes NG25 up to NG80

TPQ 040 P

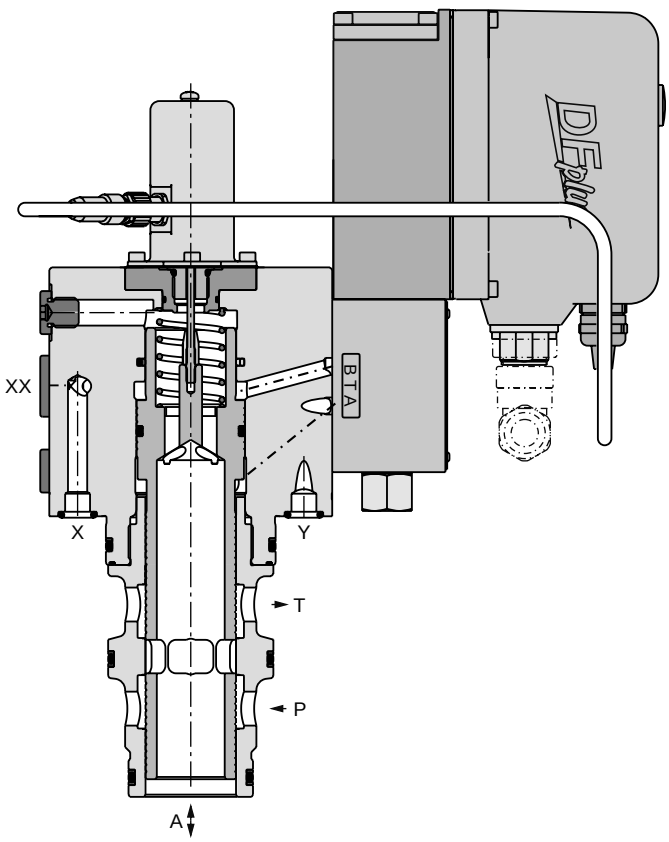

Failsafe position:

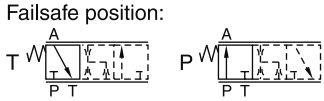

Zero position:

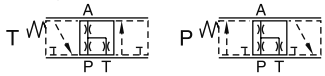

Function symbol
Fail safe position spool type P

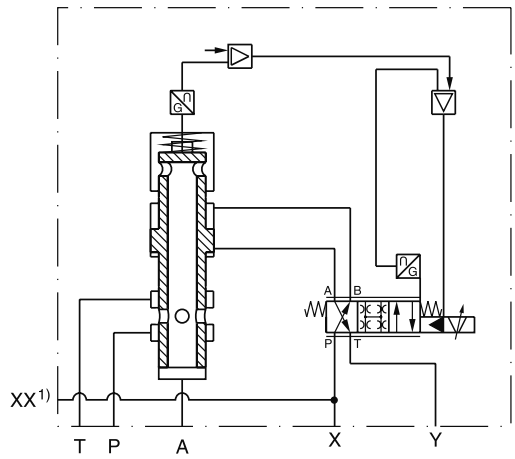

1) NG25 and NG32 without accu port XX

Ordering code

TPQ		W	H	2	5		2			0	
3-way high-response valve with LVDT	Nominal size	Parker Slip-in cartridge	Closed loop, VCD® performance, integrated electronics	Linear spool	Nominal flow	Spool type	Pilot oil supply external, drain external	Seal	Input signal	Standard electronics	Design series (not required for ordering)

Code	Nominal size
025	NG25
032	NG32
040	NG40
050	NG50
063	NG63
080	NG80

Code	Signal range
B	0...±10 V
E	0...±20 mA
S	4...+20 mA

Code	Seal
N	NBR
V	FPM
H	for HFC fluid

Zerolap		
Code	Spool type Input signal - 0 +	Fail save
P	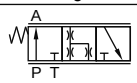	P → A
T		A → T

The DFplus pilot valve is also available with EtherCAT interface, see chapter 3, D*FP and D*1FP with EtherCAT.

Please order connector separately
Angle female connector must be used for NG25 to NG50.

Performance curves
Characteristic flow/signal line

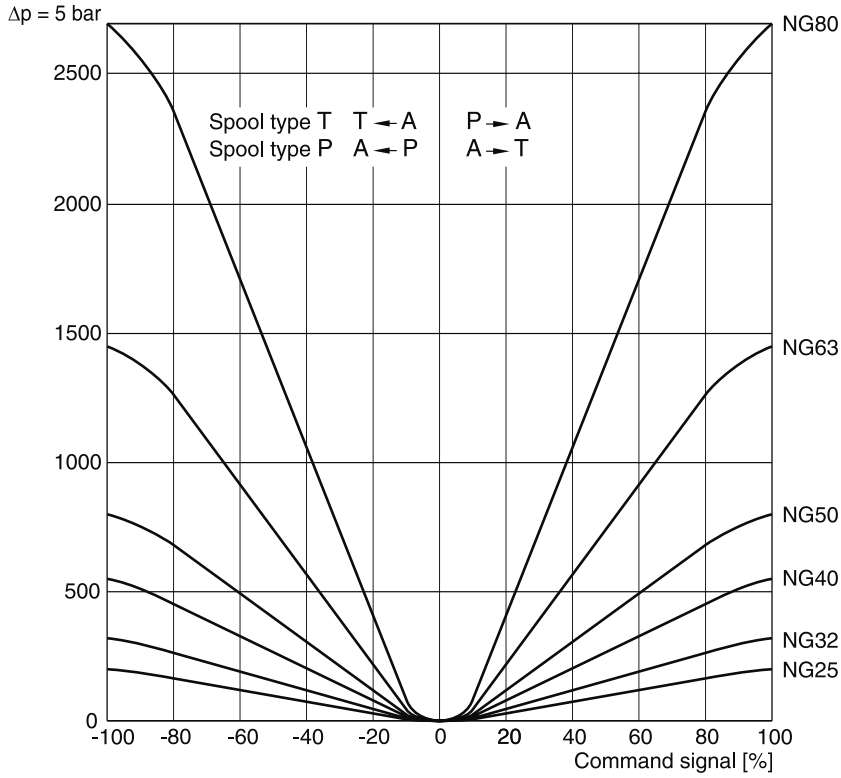

Flow at different Δp $Q_{actual} = Q_{nominal} \cdot \sqrt{\Delta p_{actual} / \Delta p_{nominal}}$

Characteristic curve measured with HLP46 at 50 °C.

General							
Design		Proportional throttle valve, slip-in cartridge					
Nominal size	DIN	**NG25**	**NG32**	**NG40**	**NG50**	**NG63**	**NG80**
Mounting position		unrestricted					
Ambient temperature	[°C]	-20...+50					
$MTTF_D$ value [1]	[years]	75					
Weight	[kg]	11	13	15	26	52	105
Vibration resistance	[g]	10 sinus 5...2000 Hz acc. IEC 68-2-6 30 random noise 20...2000 Hz acc. IEC 68-2-36 15 shock acc. IEC 68-2-27					
Hydraulic							
Max. operating pressure	[bar]	Ports A, P, T, X up to 350, XX [2] observe accumulator pressure rating; port Y: max. 35					
Fluid		Hydraulic oil according to DIN 51524					
Fluid temperature	[°C]	-20...+60 (NBR: -25...+60)					
Viscosity recommended permitted	[cSt]/[mm²/s] [cSt]/[mm²/s]	30...80 20...400					
Filtration		ISO 4406 (1999); 18/16/13					
Nominal flow at Δp = 5 bar	[l/min]	200	320	550	800	1450	2700
Recommended max. flow	[l/min]	500	1000	1600	2250	3500	6500
Nominal overlap	[%]	< 1.5					
Flow direction		A to T or P to A					
Pilot pressure	[bar]	must be as high as system pressure					
Pilot oil supply drain		external via X external via Y					
Leakage in pilot valve at 100 bar	[ml/min]	< 400					
Leakage in main stage at 100 bar	[l/min]	NG32 to 63 <2.5; NG80 <4.0					
Pilot valve size		NG06				NG10	
Max. pilot flow at 140 bar pilot press.	[l/min]	25	25	25	25	50	60
Static/dynamic							
(for optimal dynamics see installation recommendation)							
Step response at pilot press. >140 bar	[ms]	7	11	11	18	19	20
Frequency response at pilot press. >140 bar							
Amplitude -3 dB; ±5 %	[Hz]	210	105	70	45	35	30
Phase -90°; ±5 %	[Hz]	170	125	110	95	75	70
Hysteresis	[%]	< 0.1					
Sensitivity	[%]	< 0.05					
Temperature drift of center position	[%/K]	< 0.025					
Electrical							
Duty ratio	[%]	100					
Protection class		IP65 in accordance with EN 60529 (with correctly mounted plug-in connector)					
Supply voltage / ripple	[V]	DC 22 ... 30, electric shut-off at < 19, ripple < 5 % eff., surge free					
Current consumption max.	[A]	3.5					
Pre-fusing	[A]	4.0 A medium lag					
Input signal Voltage	[V]	+10...0...-10, ripple < 0,01 % eff., surge free					
Impedance	[kOhm]	100					
Current	[mA]	20...0...-20, ripple <0,01 % eff., surge free					
Impedance	[Ohm]	250					
Current	[mA]	4...12...20, ripple <0,01 % eff., surge free <3,6 mA = disable, , >3,8 mA = enble on according to NAMUR NE43					
Impedance	[Ohm]	250					
Differential input max.	[V]	30 for terminal D and E against PE (terminal G),					
	[V]	11 for terminal D and E against 0V (terminal B)					
Diagnostic signal	[V]	0...±10 rated max. 5 mA					
Enable signal	[V]	+10...0...-10 / +12.5 error detection, rated max. 5 mA					
EMC		EN 61000-6-2, EN 61000-6-4					
Electrical connection		6 + PE acc. EN 175201-804					
Wiring min.	[mm²]	7x1.0 (AWG16) overall braid shield					
Wiring length	[m]	50					

[1] If valves with onboard electronics are used in safety-related parts of control systems, in case the safety function is requested, the valve electronics voltage supply is to be switched off by a suitable switching element with sufficient reliability.

[2] Accu port XX: Please contact Parker for installation recommendation.

TPQ UK.INDD CM 16.04.15

Block circuit diagram electronics

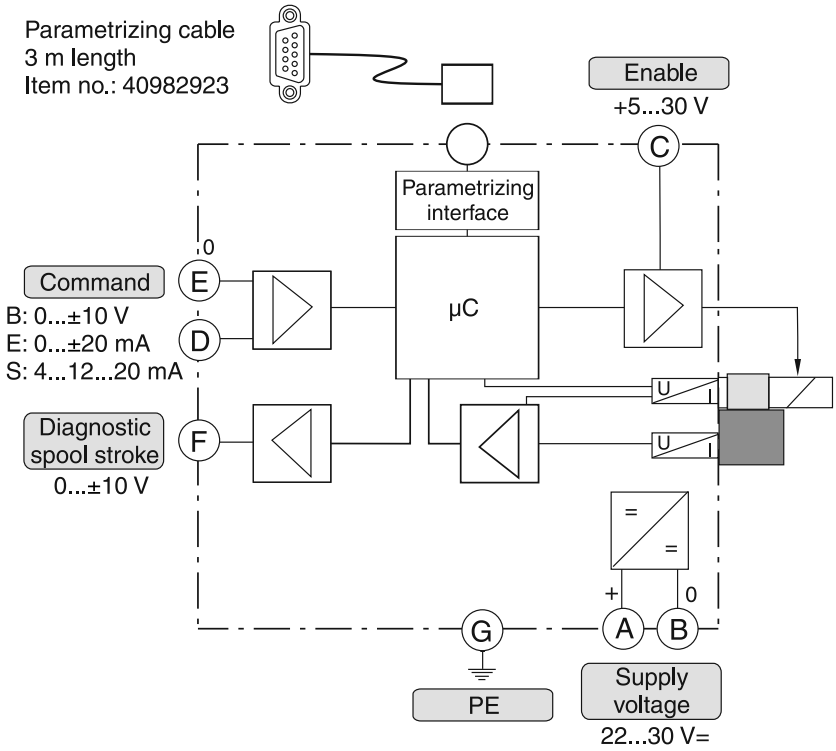

Connection diagrams electronics

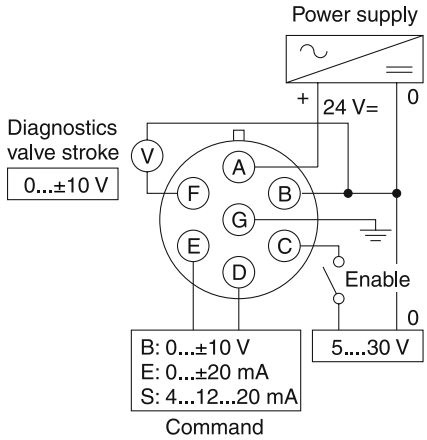

Female connector
(EMC conform)

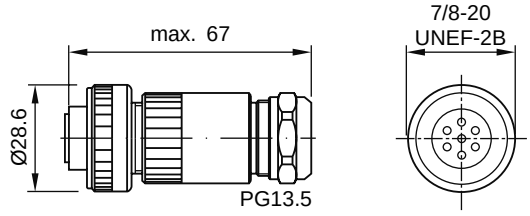

ID no. 5004072

Angle female connector
(EMC conform)

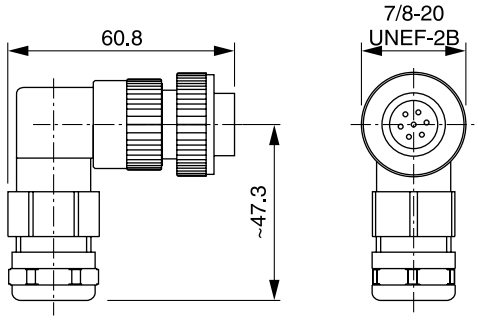

ID no. 5005160

Please order plugs separately.

NG25

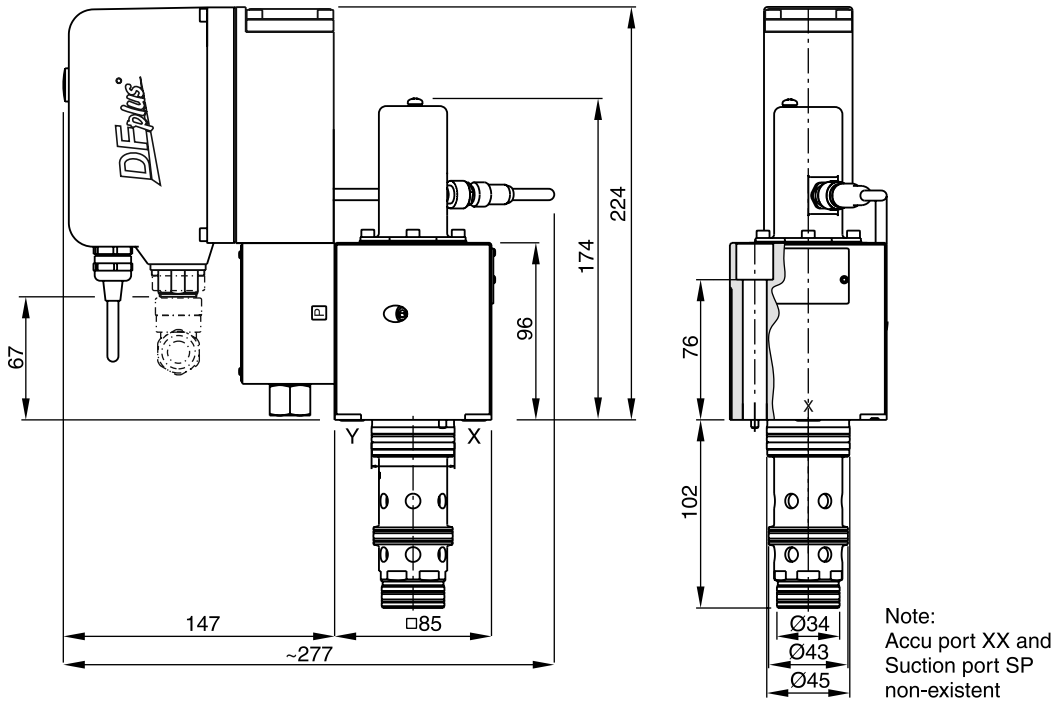

NG32

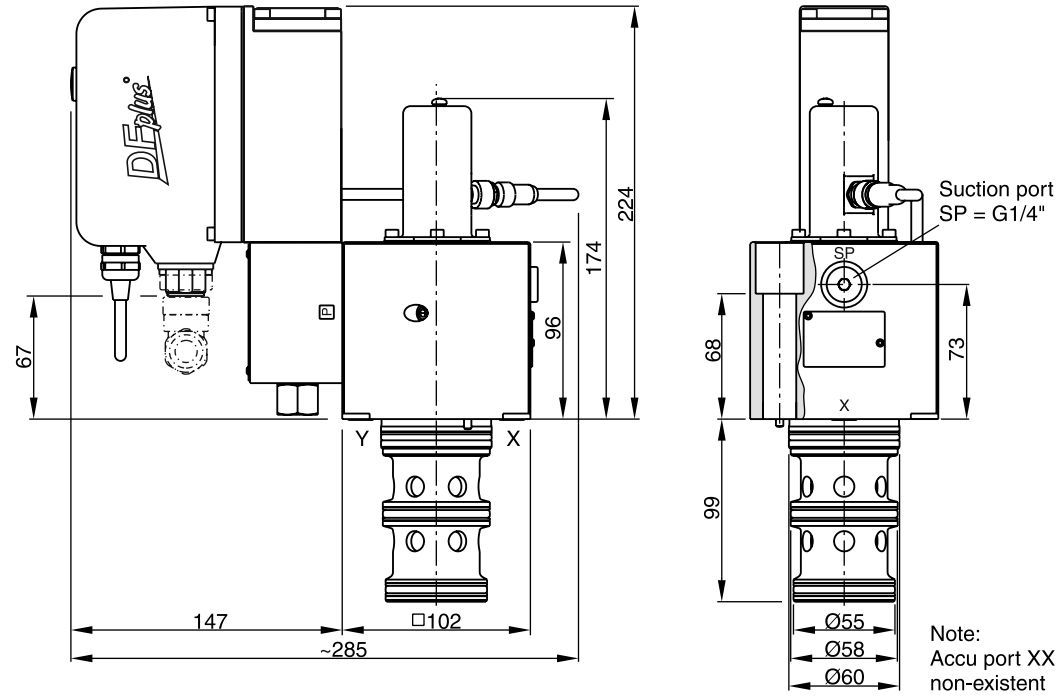

8

NG	Bolt kit -		Kit NBR	Kit FPM
25	BK504 4x M12x100 ISO 4762-12.9	108 Nm	SK-TPQ025EN30	SK-TPQ025EV30
32	BK529 4x M16x100 ISO 4762-12.9	264 Nm	SK-TPQ032EN30	SK-TPQ032EV30

TPQ UK.INDD CM 16.04.15

NG40

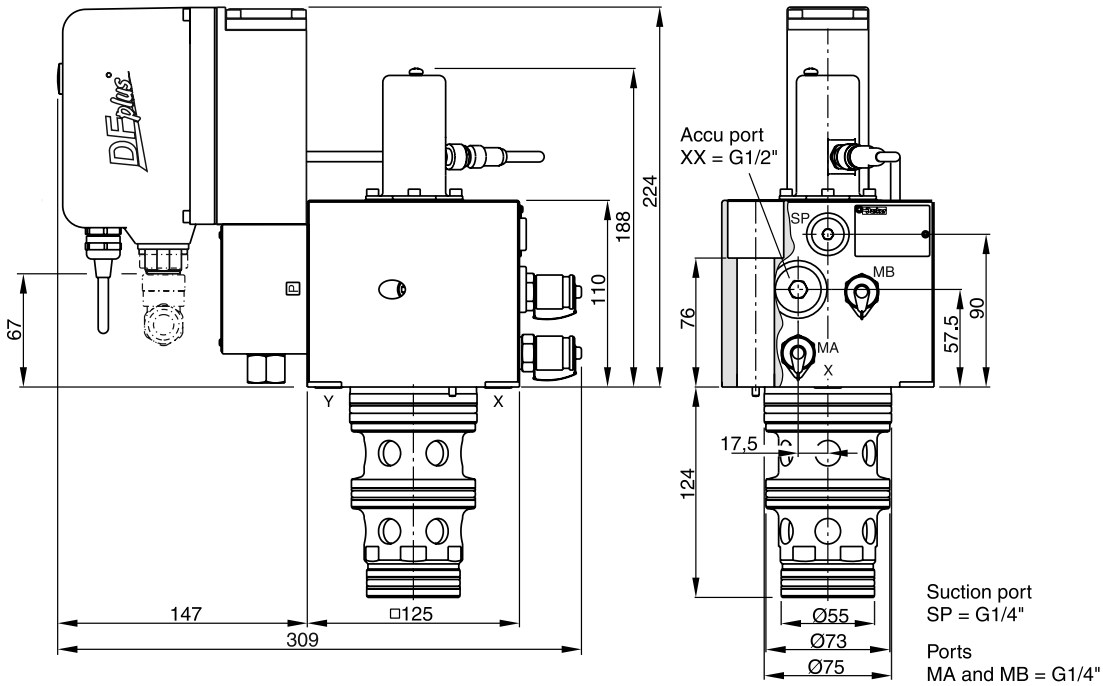

NG50

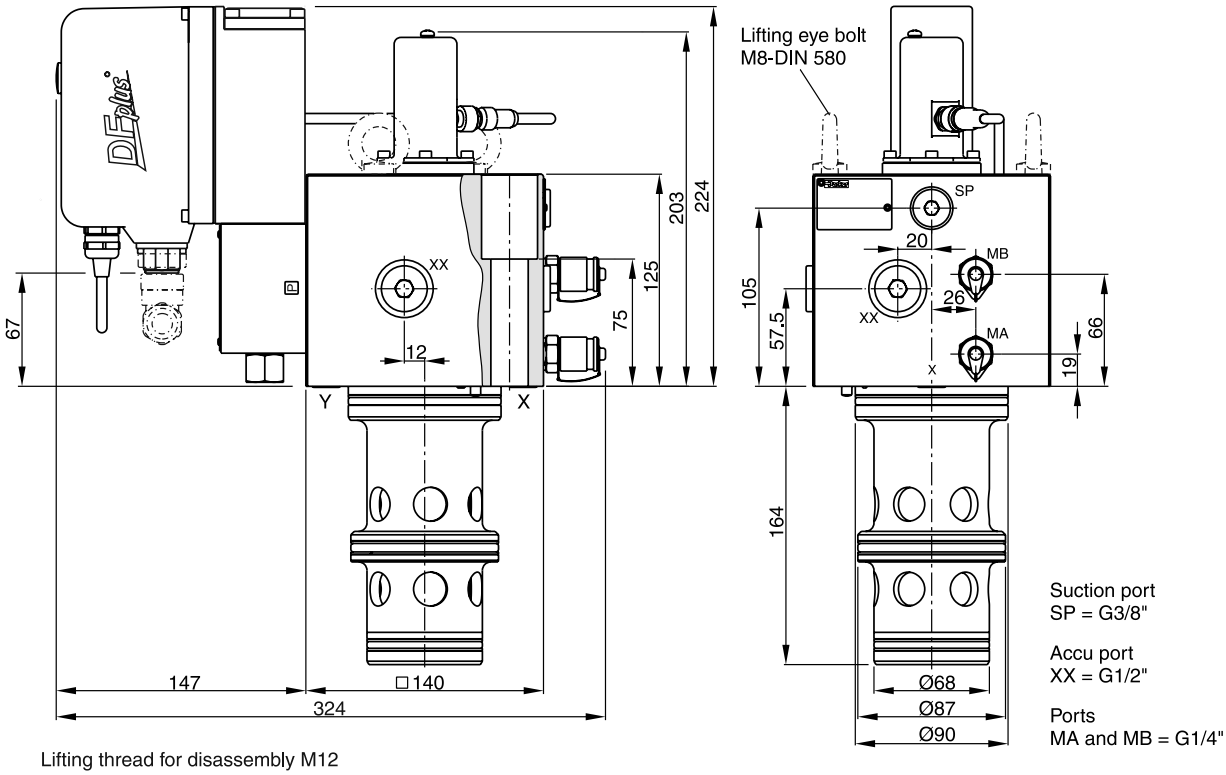

Lifting thread for disassembly M12

NG	Bolt kit -		Kit NBR	Kit FPM
40	BK481 4 x M20x110 ISO 4762-12.9	517 Nm	SK-TPQ040EN30	SK-TPQ040EV30
50	BK481 4 x M20x110 ISO 4762-12.9	517 Nm	SK-TPQ050EN30	SK-TPQ050EV30

TPQ UK.INDD CM 16.04.15

NG63

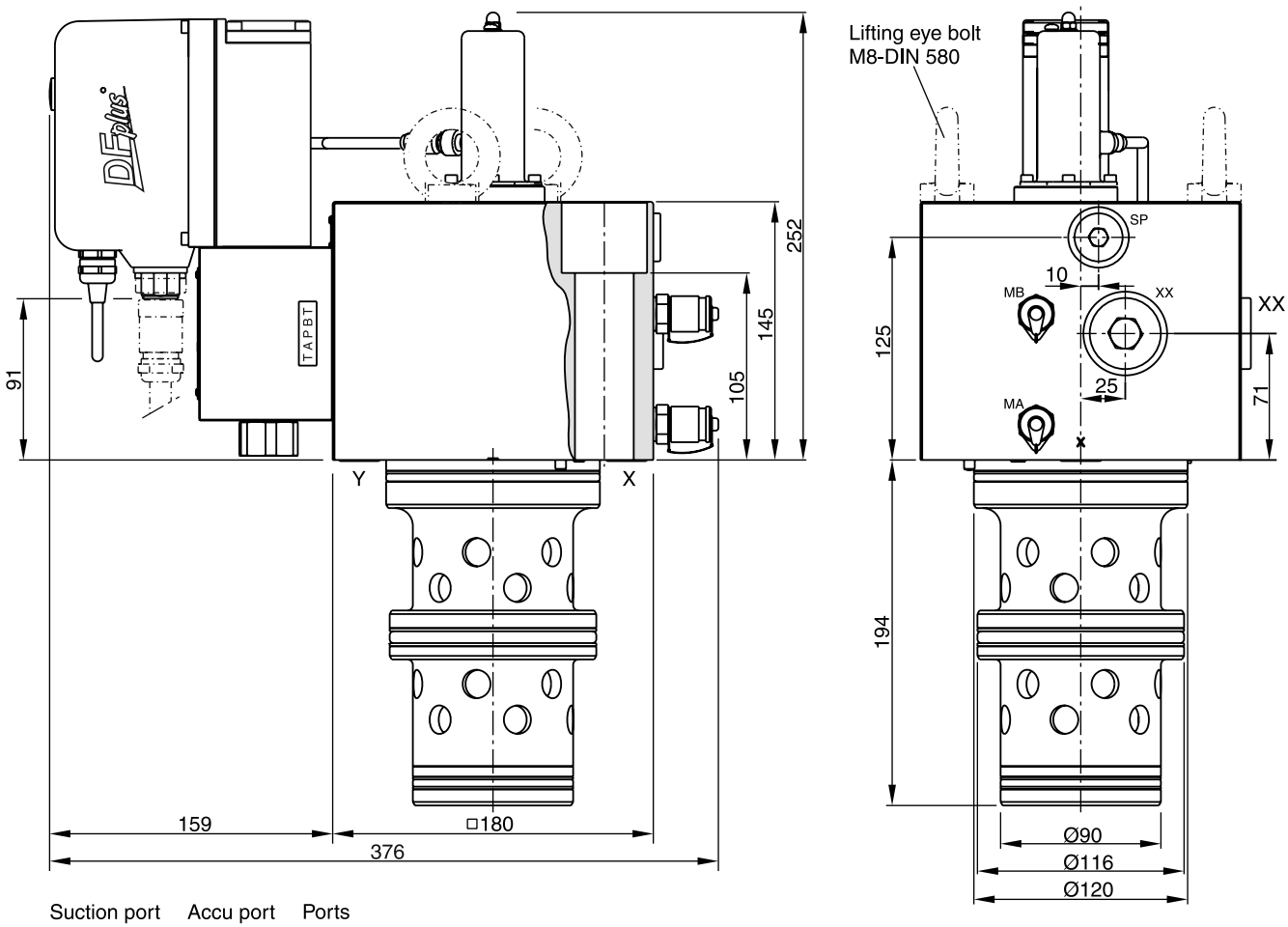

Suction port SP = G1/2"
Accu port XX = G3/4"
Ports MA and MB = G1/4"

Lifting thread for disassembly M12

NG	Bolt kit -		Kit NBR	Kit FPM
63	BK518 4x M30x160 ISO 4762-12.9	1775 Nm	SK-TPQ063EN30	SK-TPQ063EV30

TPQ UK.INDD CM 16.04.15

NG80

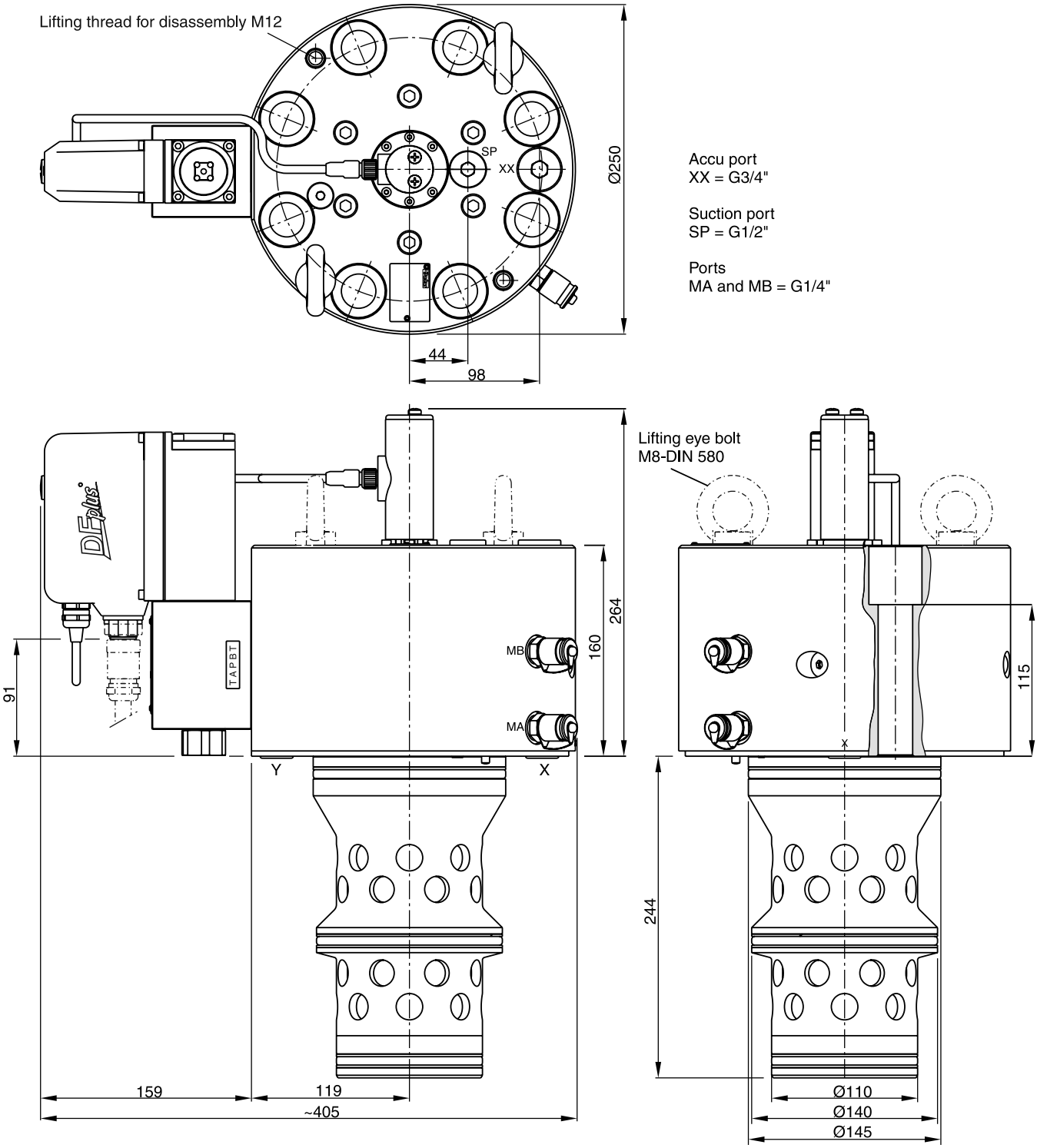

NG	Bolt kit -		Kit NBR	Kit FPM
80	BK530 8x M24x160 ISO 4762-12.9	517 Nm	SK-TPQ080EN30	SK-TPQ080EV30

TPQ UK.INDD CM 16.04.15

NG32 to NG63

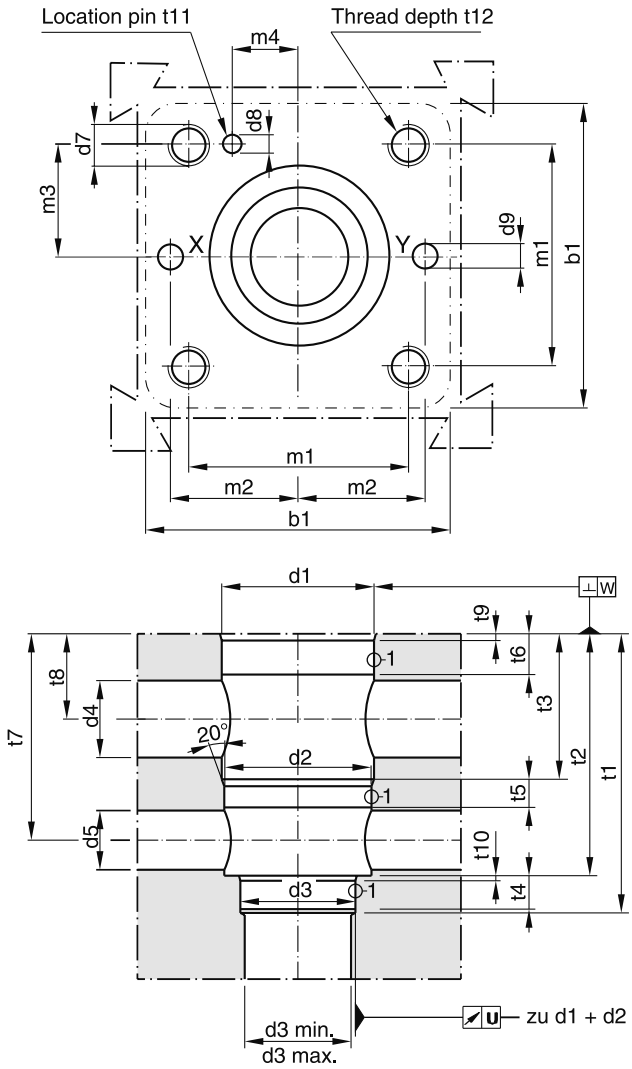

NG80

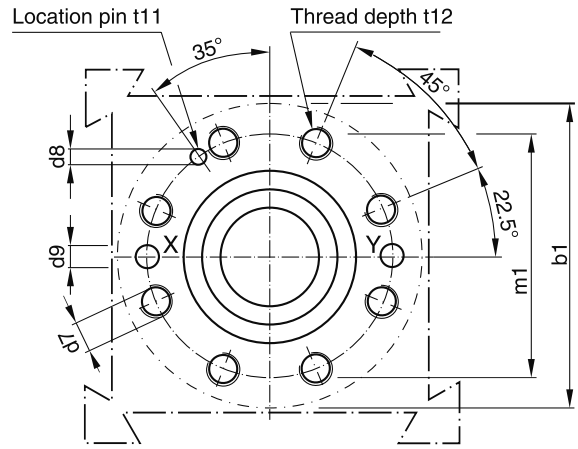

Required surface finish:

$\sqrt{R_{max}25}$, (1) = $\sqrt{R_{max}8}$

Size	b1	d1 H7	d2 H7	d3 H7	d3 min.	d3 max.	d4 max.	d5 max.	d7	d8 H13	d9	U	W
25	85	45	43	34	17	25	25	21	M 12	4	7.5	0.03	0.05
32	102	60	58	55	32	54	28	28	M 16	6	8	0.03	0.1
40	125	75	73	55	40	54	38	32	M 20	6	10	0.05	0.1
50	140	90	87	68	50	67	63	38	M 20	8	10	0.05	0.1
63	180	120	116	90	63	89	64	52	M 30	8	12	0.05	0.2
80	250	145	140	110	80	109	70	66	M 24	10	16	0.05	0.2

Size	m1 ±0.2	m2 ±0.2	m3 ±0.2	m4 ±0.2	t1 $^{+3}_{+1}$	t2 ±0.2	t3 ±0.2	t4	t5	t6	t7 ±0.2	t8 ±0.2	t9	t10	t11	t12
25	58	33	29	16	103	89 +0.3	56	11.5	15	17	78	43.5	2.5x15°	2.5x15°	10	35
32	70	41	35	17	100	85	43	13.5	16	18	71	28.5	2.5x15°	2.5x15°	10	35
40	85	50	42.5	23	125	105	54	15	18	21	88	34	3x15°	3x15°	10	45
50	100	58	50	30	165	143	83	18	18	21	122	53	4x15°	3x15°	10	45
63	125	75	62.5	38	195	165	83.5	25	29.5	33	138.5	50	4x15°	4x15°	10	65
80	200	–	–	–	245	215	123	25	27	60	181	87	5x15°	5x15°	10	50

Series	Description	Size				Mounting		Configuration		Page
	DIN / ISO	¾	1	1¼	1½	SAE61	SAE62	2-port	3-port	
	Pressure valves, manual operation									
R5V	Pressure relief function	•	•	•	•	•	•	•	•	9-2
R5U	Pressure unloading function	•	•	•	•	•			•	9-8
R5S	Pressure sequence function	•	•	•		•			•	9-13
R5R	Pressure reducing function	•	•	•		•		•		9-17
	Pressure valves, proportional operation									
R5V*P2	Pressure relief function	•	•	•	•	•	•	•	•	9-23
R5R*P2	Pressure reducing function	•	•	•		•		•		9-29
	Directional seat valves									
D5S		•	•	•	•	•		•	•	9-33
	Flow valves									
F5C	Throttle valves, proportional	•	•	•		•		•		9-47
R5A	2-way pressure compensator	•	•	•		•		•		9-51
R5P	3-way pressure compensator	•	•	•		•			•	9-53
	Check valves									
C5V	Direct operated	•	•	•	•	•	•	•		9-60
C5P	Pilot operated	•	•	•		•		•		9-64
	Accessories									
	Bolt kits, flanges, plugs									9-68

9

Pilot operated pressure relief valves series R5V have a similar design to the subplate mounted R4V series. The SAE flanges allow to mount the valves directly on the outlet flanges of pumps or inlet flanges of actuators to achieve a very compact design.

Valves with SAE flanges can also be bolted together to combine functions without the need of a manifold block.

R5V 2-port

R5V 3-port

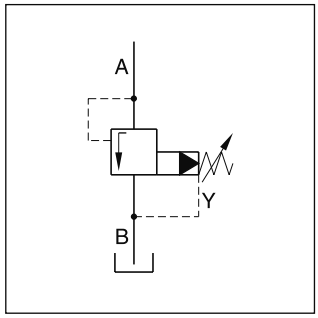

R5V 2-port

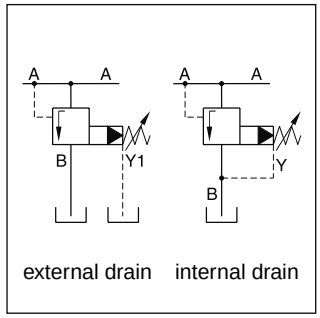

R5V 3-port

Features

- Pilot operated with manual adjustment
- R5V with 2-port body
  - 3 sizes (SAE ¾", 1", 1¼")
  - SAE61 flange
- R5V with 3-port body
  - 4 sizes (SAE ¾", 1", 1¼", 1½")
  - SAE61 and SAE62 flange
- 3 pressure stages
- 3 adjustment modes
  - Hand knob
  - Acorn nut with lead seal
  - Cylinder lock
- With optional vent function

R5V 2-port

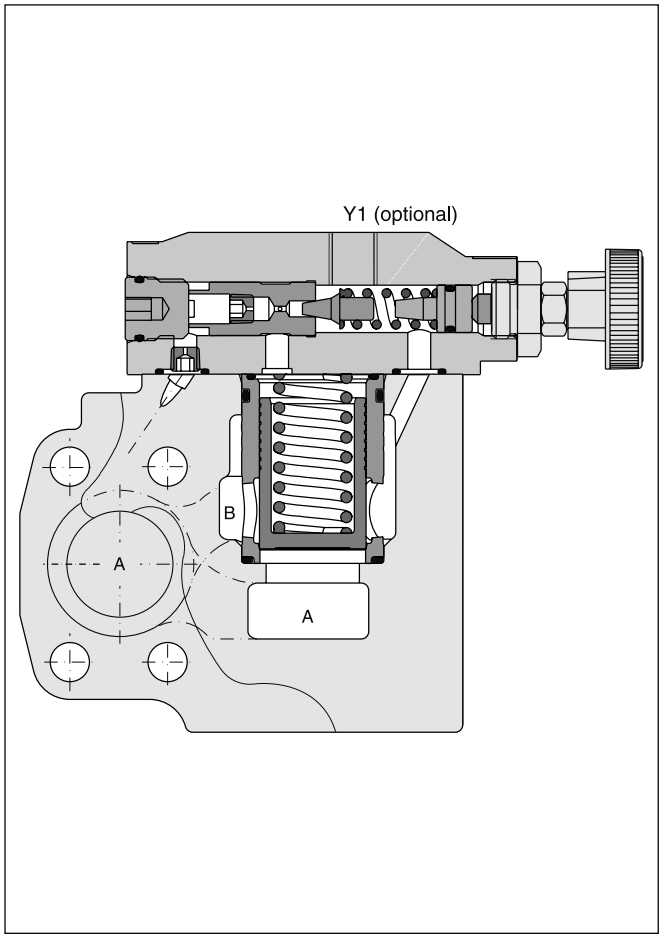

R5V 3-port

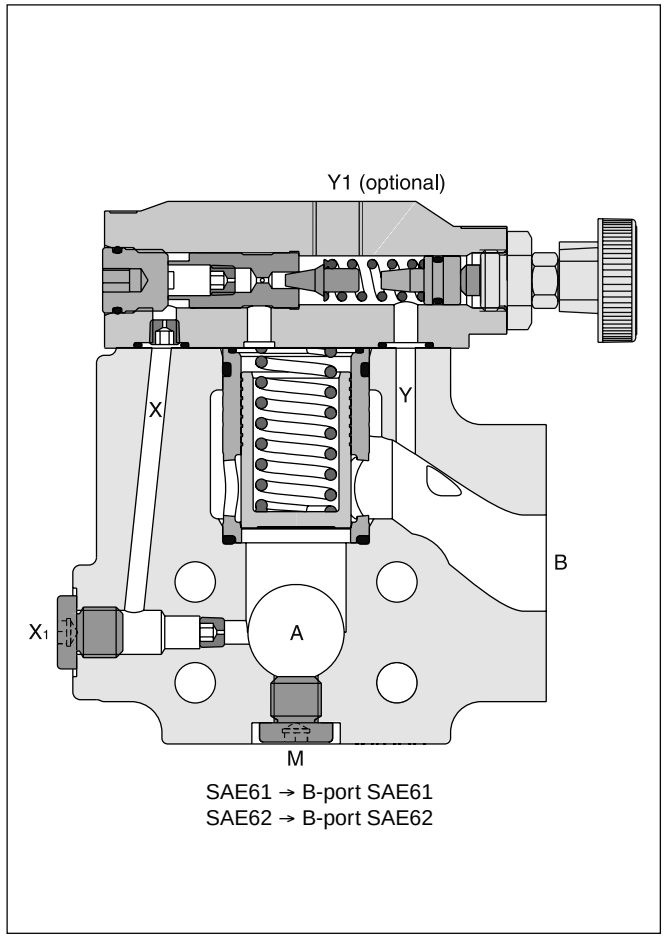

SAE61 → B-port SAE61
SAE62 → B-port SAE62

Ordering Code

Series R5V

R5V	☐	–	☐	☐	☐	☐	☐	☐	☐	A	☐	☐	☐
Pressure relief valve	Nominal size		SAE Interface	Pilot ports	Pressure stages	Adjust-ment	Pilot oil	Switching type	Solenoid voltage	Design	Seals	Design series (not required for ordering)	Options

Code	Port size
06	SAE ¾"
08	SAE 1"
10	SAE 1¼"
12 [1]	SAE 1½"

SAE61		
Code	Size	Max. pressure [bar]
3	12	210
4	10	280
5	06/08	350
SAE62		
Code	Size	Max. pressure [bar]
6 [1]	06/08/10/12	350

2-port body	
Code	pilot ports
7	Y1 = G ¼" [2]
3-port body	
Code	pilot ports
9	Y1 [2], X1, M = G ¼"

Code	Pressure stages
1	up to 105 bar
3	up to 210 bar
5 [3]	up to 350 bar

Code	Adjustment
1	Hand knob
3	Acorn nut with lead seal
4	Cylinder lock

Code	Options
008 [5]	Vent function with slow unloading
070	Metric 3-port body for R5V10 SAE62: Pressure ports (A): SAE62 with 15 mm through holes (for M14), Tank port: SAE61 (M12)
152 [6]	3-port body with metric threads

Code	Seals
1	NBR
5	FPM

Code	Solenoid voltage
omit	Standard w/o vent function
G0R	12 V=
G0Q	24 V=
GAR [4]	98 V=
GAG [4]	205 V=
W30	110 V / 50 Hz 120 V / 60 Hz
W31	230 V / 50 Hz 240 V / 60 Hz

Code	Switching type
omit	Standard w/o vent function
09	Solenoid not activ. unpress. circulation
11	Solenoid activated unpress. circulation

Pilot oil	
Code	Drain line
2	internal
6	external from Y1-port

Further options on request

[1] Only R5V 3-port.
[2] Y1 only available at external drain (pilot oil code 6).
[3] R5V10-4*5 up to 280 bar.
[4] To be used in combination with rectifier plugs at 120 VAC / 230 VAC power supply.
[5] Only for vent valve function code 09.
[6] R5V08 SAE62: Tank port SAE61 (M10).

Technical data

General							
Size			**06 (¾")**	**08 (1")**	**10 (1¼")**	**12 (1½")**	
Mounting			Flanged according to SAE61 and SAE62				
Mounting position			unrestricted				
Ambient temperature		[°C]	-20...+60				
$MTTF_D$ value		[years]	75				
Weight	R5V 2-port	[kg]	4.0	4.6	5.9	—	
	R5V 3-port	[kg]	3.6	4.6	5.2	8.0	
Hydraulic							
Max. operating pressure		[bar]					
	SAE61 Ports A, B		350	350	280	210	
	Port Y1		30	30	30	30	
	SAE62 Ports A, B		350	350	350	350	
	Port Y1		30	30	30	30	
Pressure stages		[bar]	105, 210, 350				
Nominal flow		[l/min]	90	300	600	600	
Fluid			Hydraulic oil according to DIN 51524				
Fluid temperature		[°C]	-20...+70 (NBR: -25...+70)				
Viscosity,	permitted	[cSt] / [mm^2/s]	20 ... 400				
	recommended	[cSt] / [mm^2/s]	30...80				
Filtration			ISO 4406 (1999); 18/16/13				
Electrical (solenoid)							
Duty ratio			100 % ED; CAUTION: coil temperature up to 150 °C possible				
Protection class			IP65 in accordance with EN 60529 (with correctly mounted plug-in connector)				
		Code	G0R	G0Q	GAR	GAG	W30	W31
Supply voltage		[V] [V]	12 V =	24 V =	98 V =	205 V =	110 at 50 Hz 120 at 60 Hz	230 at 50 Hz 240 at 60 Hz
Tolerance supply voltage		[%]	±10	±10	±10	±10	±5	±5
Current consumption	hold	[A]	2.72	1.29	0.33	0.13	0.6 / 0.55	0.3 / 0.27
	in rush	[A]	2.72	1.29	0.33	0.13	2.5 / 2.4	1.25 / 1.2
Power consumption	hold	[W]	32.7	31	31.9	28.2	70/70 VA	70/70 VA
	in rush	[W]	32.7	31	31.9	28.2	280/290 VA	280/290 VA
Solenoid connection			Connector as per EN175301-803, solenoid identification as per ISO 9461				
Wiring min.		[mm^2]	3 x 1.5 recommended				
Wiring length max.		[m]	50 recommended				

9

p/Q performance curve

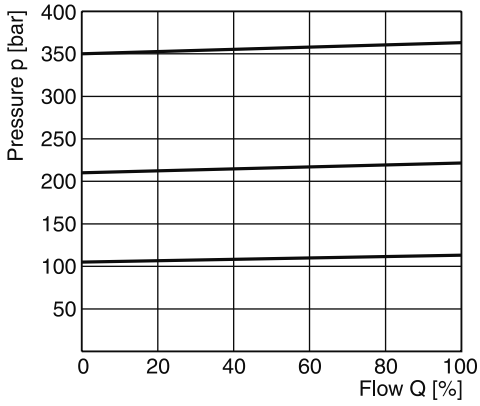

Minimum pressure curve

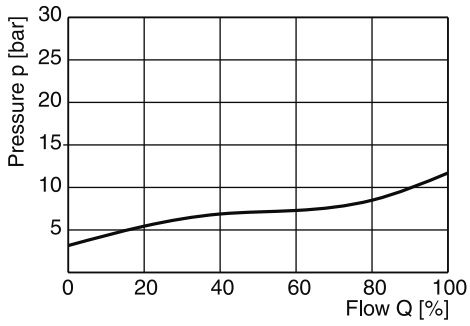

All characteristic curves measured with HLP46 at 50 °C.

The performance curves are measured with external drain.
For internal drain the tank pressure has to be added to curve.

Dimensions R5V 2-port

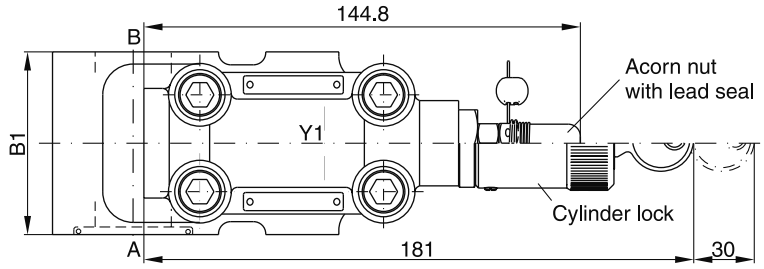

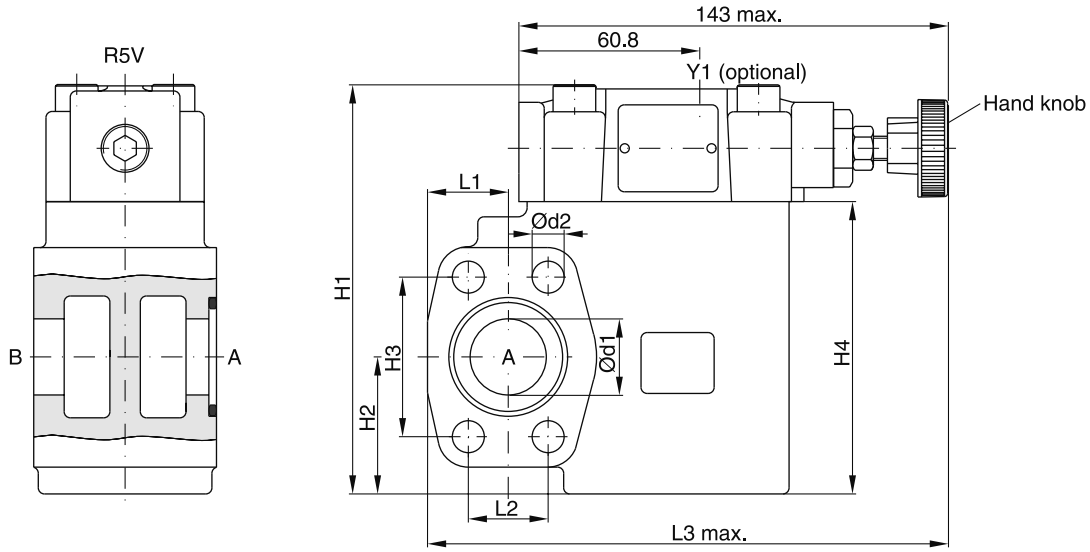

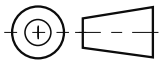

9

SAE61

Seal kits		
NG	NBR	FPM
06	S16-91850-0	S16-91850-5
08	S16-91851-0	S16-91851-5
10	S16-91852-0	S16-91852-5

NG	B1	H1	H2	H3	H4	L1	L2	L3	d1	d2
06	60	131.6	37	47.6	90	24.6	22.2	152	19	10.5
08	60	137.6	45	52.4	96	26.5	26.2	171	25	10.5
10	75	150.6	48	58.7	109	34.0	30.2	179	32	12.5

Port	Function	Port size		
		R5V06	R5V08	R5V10
A	Pressure	¾" SAE61	1" SAE61	1¼" SAE61
B	Tank	¾" SAE61	1" SAE61	1¼" SAE61
Y1	External drain	G¼"	G¼"	G¼"

Dimensions R5V 3-port

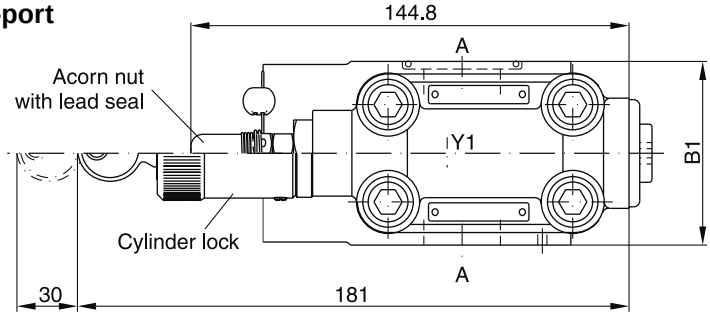

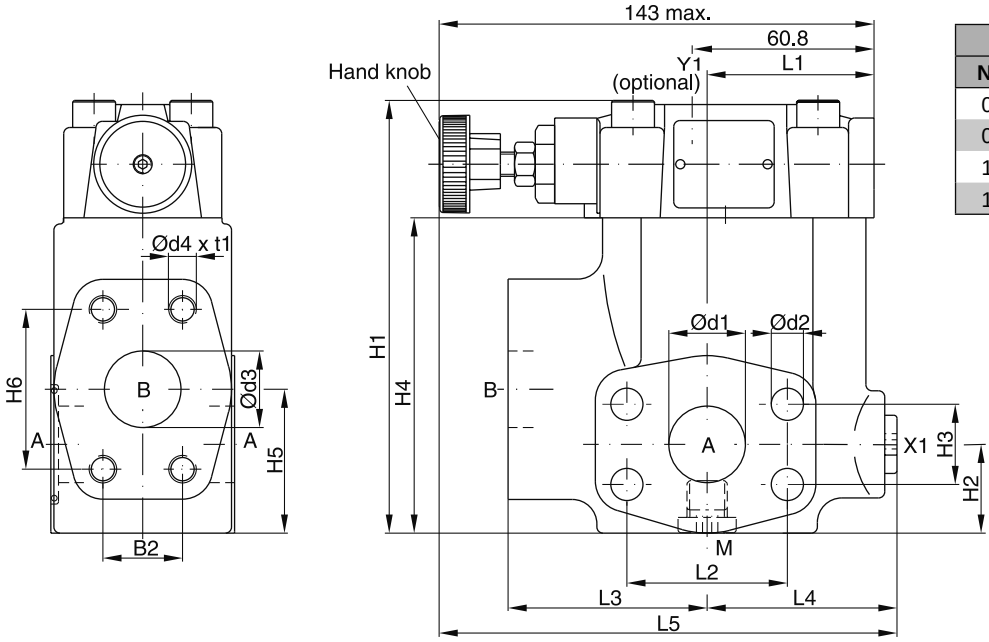

Seal kits		
NG	NBR	FPM
06	S16-91850-0	S16-91850-5
08	S16-91851-0	S16-91851-5
10	S16-91852-0	S16-91852-5
12	S26-27421-0	S26-27421-5

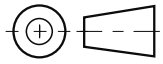

9

SAE61

NG	B1	B2	H1	H2	H3	H4	H5	H6	L1	L2	L3	L4	L5	d1	d2	d3	d4 (option 152)	t1
06	60	22.2	119	29.5	22.2	81	41	47.6	50.3	47.6	63	60	152	19	10.5	19	3/8”-16 UNC (M10)	20
08	60	26.2	141	30.5	26.2	103	47	52.4	55.8	52.4	65	62	149	25	10.5	25	3/8”-16 UNC (M10)	23
10	75	30.2	151	37.5	30.2	113	65	58.7	57.8	58.7	61	68	150.5	32	12.5	30	7/16”-14 UNC (M12)	22
12	80	35.7	178	72	35.7	140	73	69.8	37.3	69.8	92.5	59.2	171.2	38	13.5	38	1/2”-13 UNC (M12)	27

SAE62

NG	B1	B2	H1	H2	H3	H4	H5	H6	L1	L2	L3	L4	L5	d1	d2	d3	d4 (option 152)	t1
06	60	23.8	119	29.5	23.8	81	41	50.8	50.3	50.8	63	60	152	19	10.5	19	3/8”-16 UNC (M10)	20
08	60	27.8	141	30.5	27.8	103	47	57.2	55.8	57.2	65	62	149	25	12.5	25	7/16”-14 UNC (M10)[1]	22
10	75	31.8	151	37.5	31.8	113	65	66.7	57.8	66.7	61	68	150.5	32	13.5	30	1/2”-13 UNC (M12)	24
12	80	36.5	178	72	36.5	140	73	79.4	37.3	79.4	92.5	59.2	171.2	38	17	38	5/8”-11 UNC (M16)	33

Port	Function	Port size			
		R5V06	R5V08	R5V10	R5V12
A (2)	Pressure	¾" SAE61/62	1" SAE61/62	1¼" SAE61/62	1½" SAE61/62
B	Tank	¾" SAE61/62	1" SAE61/62	1¼" SAE61/62	1½" SAE61/62
X1	External pilot port [2]	G¼"	G¼"	G¼"	G¼"
Y1	External drain	G¼"	G¼"	G¼"	G¼"
M	Pressure gauge	G¼"	G¼"	G¼"	G¼"

[1] T-port SAE61.
[2] Closed when supplied.

R5V UK.INDD CM 16.03.15

Dimensions R5V with vent function

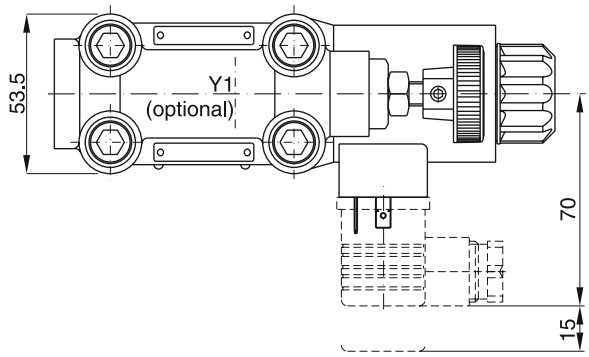

Seal kits	
NBR	**FPM**
DC solenoid	
S56-40609-0	S56-40609-5
AC solenoid	
S26-35237-0	S26-35237-5

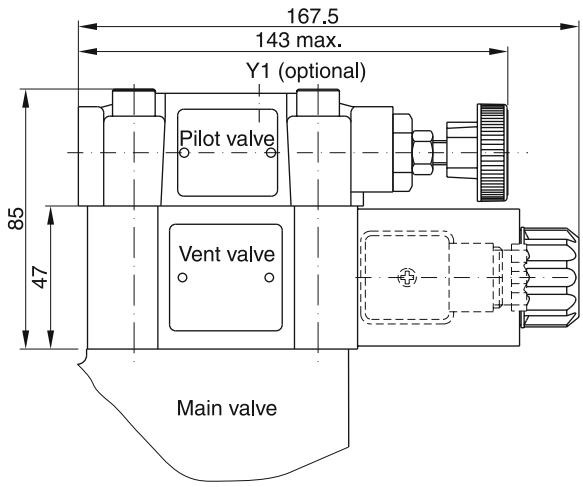

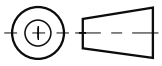

9

	R5V 2-port		R5V 3-port	
Code	**Internal drain**	**External drain**	**Internal drain**	**External drain**
11	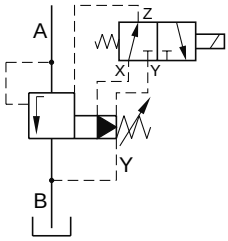	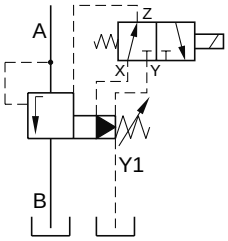	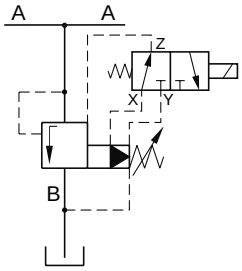	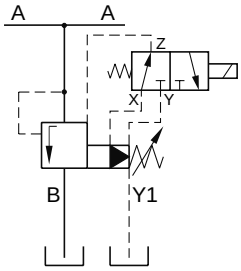
09	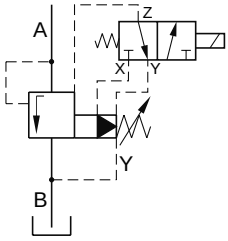	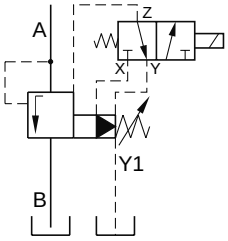	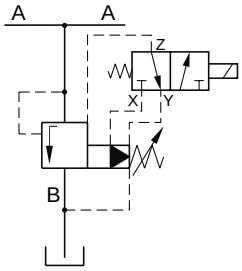	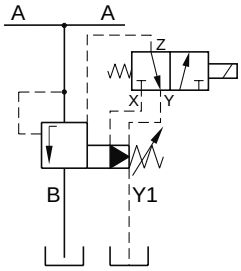

R5V UK.INDD CM 16.03.15

Pilot operated pressure unloading valves series R5U have a similar design to the subplate mounted R4U series. The SAE flanges allow to mount the valve directly on the outlet flanges of pumps.

A typical application is the unloading of a pump in an accumulator circuit. The combination of an R5U, C5V and R5V on a double pump generates a high pressure / low pressure pump system without the need of a manifold block or piping between the valves.

Features

- Pilot operated unloading valve
- 3-port body with SAE61 flange
- 4 sizes (SAE ¾", 1", 1¼", 1½")
- 3 pressure stages
- 3 adjustment modes
  - Hand knob
  - Acorn nut with lead seal
  - Cylinder lock
- With optional vent function

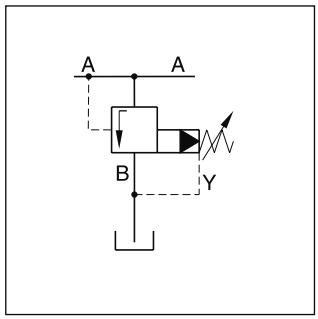

R5U 3-port internal drain

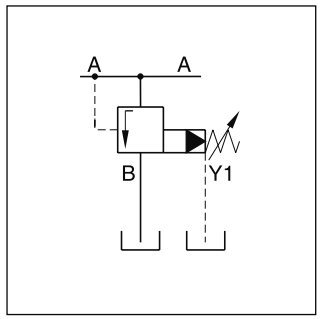

R5U 3-port external drain

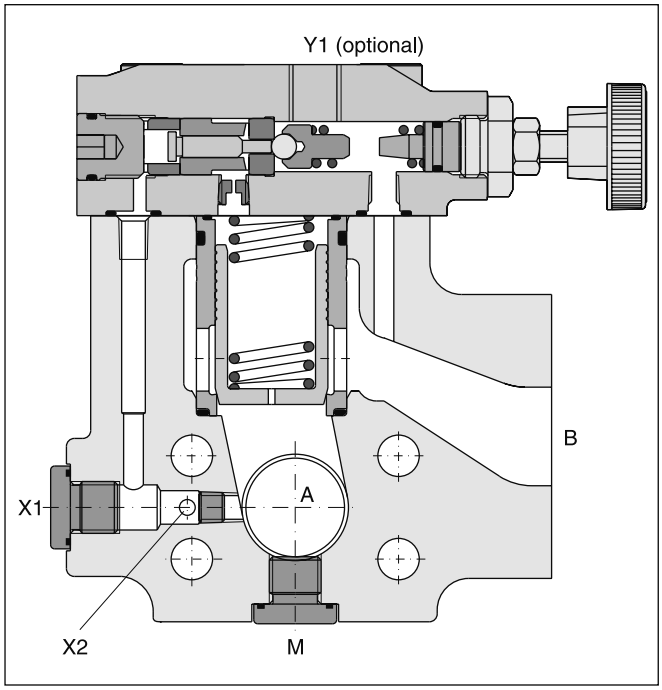

High pressure / low pressure system

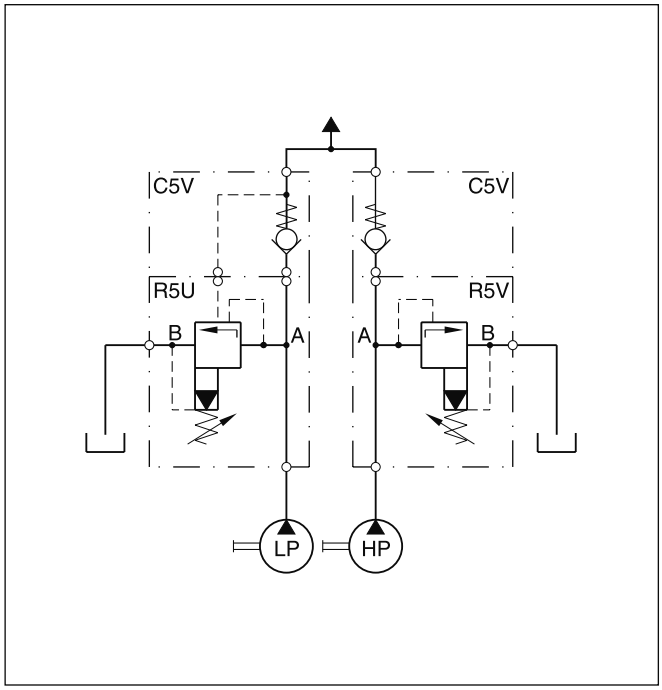

Ordering Code

R5U	☐	–	☐	9	☐	☐	☐	☐	☐	A	☐	☐
Pressure unloading valve	Nominal size		SAE61 interface	3-port body M, Y1, X = G¼"	Pressure stages	Adjust-ment	Pilot oil	Switching type	Solenoid voltage	Design series	Seals	Options

Code	Port size
06	SAE ¾"
08	SAE 1"
10	SAE 1¼"
12	SAE 1½"

SAE61		
Code	Size	Max. pressure [bar]
3	12	210
4	10	280
5	06/08	350

Code	Pressure stages [bar]	Pressure differential
1	up to 105	28 %
3	up to 210	28 %
5 [1]	up to 350	15 %

Code	Adjustment
1	Hand knob
3	Acorn nut with lead seal
4	Cylinder lock

Code	Options
008 [3]	Vent function with slow unloading
152	3-port body with metric threads

Code	Seals
1	NBR
5	FPM

Code	Solenoid voltage
omit	Standard w/o vent function
G0R	12 V=
G0Q	24 V=
GAR [2]	98 V=
GAG [2]	205 V=
W30	110 V / 50 Hz 120 V / 60 Hz
W31	230 V / 50 Hz 240 V / 60 Hz

Code	Switching type
omit	Standard w/o vent function
09	Solenoid not activ. unpress. circulation
11	Solenoid activated unpress. circulation

Pilot oil		
Code	Pilot	Drain
4	External via port X1 or X2	External
5	External via port X1 or X2	Internal

Further options on request

[1] R5U10-495 up to 280 bar.
[2] To be used in combination with rectifier plugs at 120 VAC / 230 VAC power supply.
[3] Only for vent valve function code 09.

Technical data

General						
Size		**06 (¾")**	**08 (1")**	**10 (1¼")**	**12 (1½")**	
Mounting		Flanged according to SAE61				
Mounting position		unrestricted				
Ambient temperature	[°C]	-20...+60				
$MTTF_D$ value	[years]	75				
Weight	[kg]	3.6	4.6	5.2	8.0	
Hydraulic						
Max. operating pressure	[bar]					
Ports A, B, X		350	350	280	210	
Ports Y, Y1		30	30	30	30	
Pressure stages	[bar]	105, 210, 350				
Nominal flow	[l/min]	90	300	600	600	
Fluid		Hydraulic oil according to DIN 51524				
Fluid temperature	[°C]	-20...+70 (NBR: -25...+70)				
Viscosity permitted	[cSt] / [mm^2/s]	20 ... 400				
Viscosity recommended	[cSt] / [mm^2/s]	30...80				
Filtration		ISO 4406 (1999); 18/16/13				
Electrical						
Duty ratio		100 % ED; CAUTION: coil temperature up to 150 °C possible				
Protection class		IP65 in accordance with EN 60529 (with correctly mounted plug-in connector)				
	Code	G0R	G0Q	GAR	GAG	W30	W31
Supply voltage	[V] [V]	12 V =	24 V =	98 V =	205 V =	110 at 50 Hz 120 at 60 Hz	230 at 50 Hz 240 at 60 Hz
Tolerance supply voltage	[%]	±10	±10	±10	±10	±5	±5
Current consumption hold	[A]	2.72	1.29	0.33	0.13	0.6 / 0.55	0.3 / 0.27
in rush	[A]	2.72	1.29	0.33	0.13	2.5 / 2.4	1.25 / 1.2
Power consumption hold	[W]	32.7	31	31.9	28.2	70/70 VA	70/70 VA
in rush	[W]	32.7	31	31.9	28.2	280/290 VA	280/290 VA
Solenoid connection		Connector as per EN175301-803, solenoid identification as per ISO 9461					
Wiring min.	[mm^2]	3 x 1.5 recommended					
Wiring length max.	[m]	50 recommended					

9

p/Q performance curve

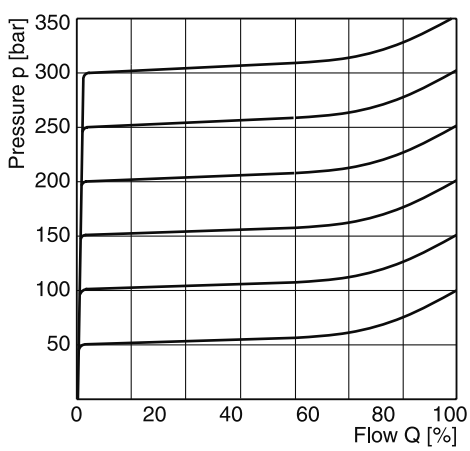

Minimum pressure curve

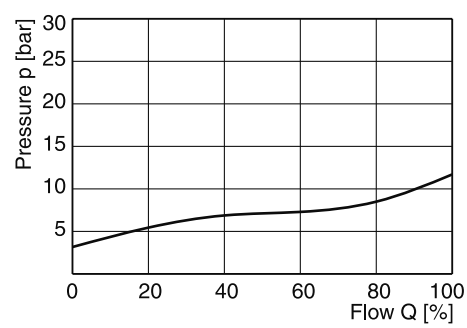

All characteristic curves measured with HLP46 at 50 °C.

The performance curves are measured with external drain.
For internal drain the tank pressure has to be added to curve.

Dimensions R5U

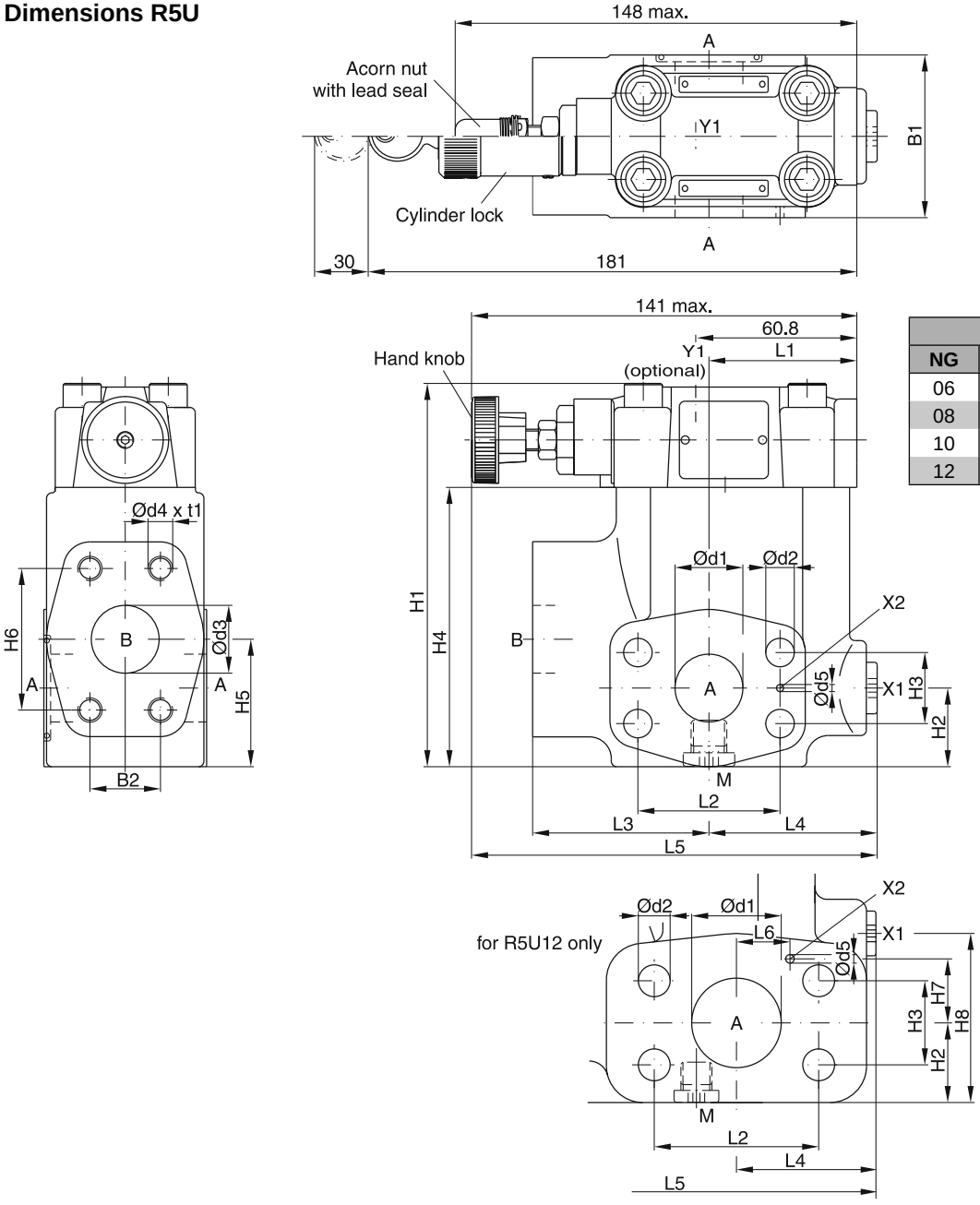

Seal kits		
NG	NBR	FPM
06	S16-91850-0	S16-91850-5
08	S16-91851-0	S16-91851-5
10	S16-91852-0	S16-91852-5
12	S26-27421-0	S26-27421-5

NG	B1	B2	H1	H2	H3	H4	H5	H6	L1	L2	L3	L4	L5	d1	d2	d3	d4	t1	d5	L6	H7	H8
06	60	22.2	119	29.5	22.2	81	41	47.6	50.3	47.6	63	60	152	19	10.5	19	3/8”-16 UNC	20	3.0	–	–	–
08	60	26.2	141	30.5	26.2	103	47	52.4	55.8	52.4	65	62	149	25	10.5	25	3/8”-16 UNC	23	3.0	–	–	–
10	75	30.2	151	37.5	30.2	113	65	58.7	57.8	58.7	61	68	150.5	32	12.5	30	7/16”-14 UNC	22	3.0	–	–	–
12	80	35.7	178	35.5	35.7	140	73	69.8	37.3	69.8	92.5	59.2	171.2	38	13.5	38	1/2”-13 UNC	27	3.0	22.4	27.2	72

Port	Function	Port size			
		R5U06	R5U08	R5U10	R5U12
A (2)	Pressure	¾" SAE61	1" SAE61	1¼" SAE61	1½" SAE61
B	Tank	¾" SAE61	1" SAE61	1¼" SAE61	1½" SAE61
X1	External pilot port [1]	G¼"	G¼"	G¼"	G¼"
Y1	External drain	G¼"	G¼"	G¼"	G¼"
M	Pressure gauge	G¼"	G¼"	G¼"	G¼"

[1] Closed when supplied.

R5U UK.INDD CM 16.03.15

Dimensions R5U with vent function

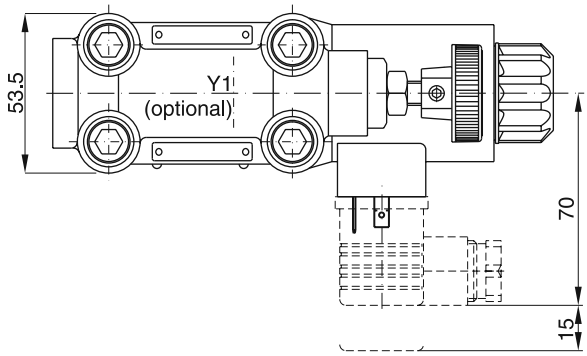

Seal kits	
NBR	**FPM**
DC solenoid	
S56-40609-0	S56-40609-5
AC solenoid	
S26-35237-0	S26-35237-5

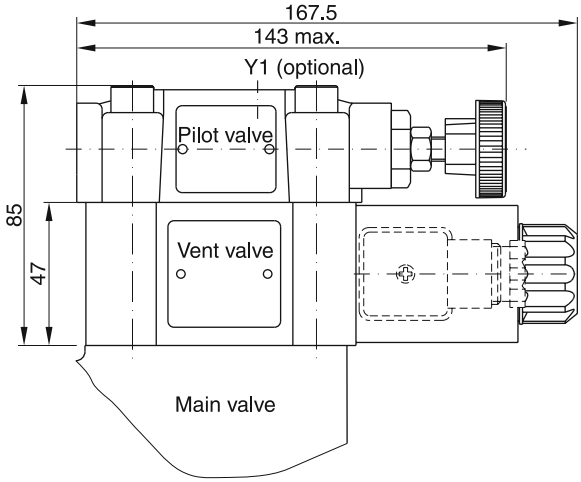

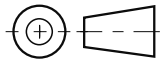

9

Code	Internal drain	External drain
11	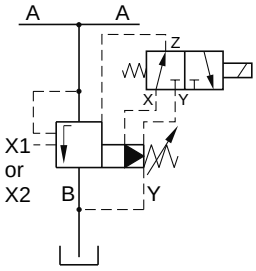	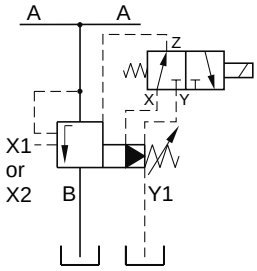
09	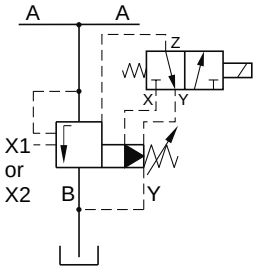	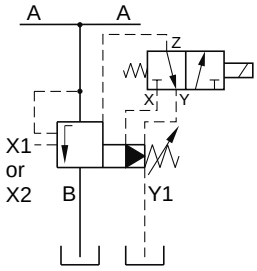

Pilot operated sequence valves series R5S have a similar design to the subplate mounted R4S series. The SAE flanges allow to mount the valve directly on the inlet flanges of actuators or outlet flanges of pumps to achieve a very compact design.

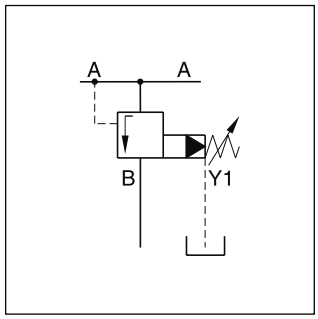

Features

- Pilot operated with manual adjustment
- 3-port body with SAE61 flange
- 3 sizes (SAE ¾", 1", 1¼")
- 3 pressure stages
- 2 adjustment modes
  - Hand knob
  - Acorn nut with lead seal
- Optional with vent function (on request)

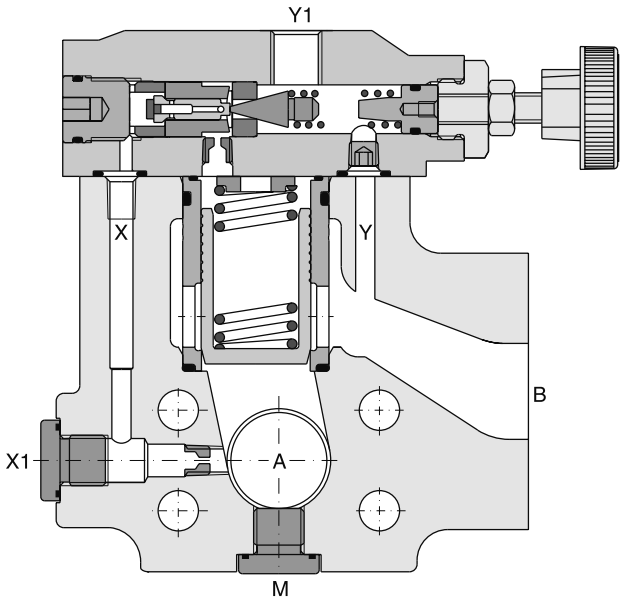

Ordering code

R5S	[ ]	–	[ ]	9	[ ]	[ ]	6	A	[ ]	152
Pressure sequence valve	Nominal size		SAE61 interface	3-port body (Y1, M = G¼")	Pressure stages	Adjust-ment	External drain from Y1 port	Design series	Seals	3-port body with metric threads

Code	Port size
06	SAE ¾"
08	SAE 1"
10	SAE 1¼"

SAE 61		
Code	Size	Max. pressure [bar]
4	10	280
5	06/08	350

Code	Pressure stages
1	up to 105 bar
3	up to 210 bar
5 [1)]	up to 350 bar

Code	Seals
1	NBR
5	FPM

Code	Adjustment
1	Hand knob
3	Acorn nut with lead seal

Further options on request

[1)] R5S10-495 up to 280 bar.

9

Technical data

General			
Size	**06 (¾")**	**08 (1")**	**10 (1¼")**
Mounting	Flanged according to SAE61		
Mounting position	unrestricted		
Ambient temperature [°C]	-20...+60		
$MTTF_D$ value [years]	75		
Weight [kg]	3.6	4.6	5.2
Hydraulic			
Max. operating pressure [bar]			
Ports A, B	350	350	280
Ports Y, Y1	30	30	30
Pressure stages [bar]	105, 210, 350		
Nominal flow [l/min]	90	300	600
Fluid	Hydraulic oil according to DIN 51524		
Fluid temperature [°C]	-20...+70 (NBR: -25...+70)		
Viscosity permitted [cSt] / [mm^2/s]	20 ... 400		
Viscosity recommended [cSt] / [mm^2/s]	30...80		
Filtration	ISO 4406 (1999); 18/16/13		

Typical pressure characteristics at closing point

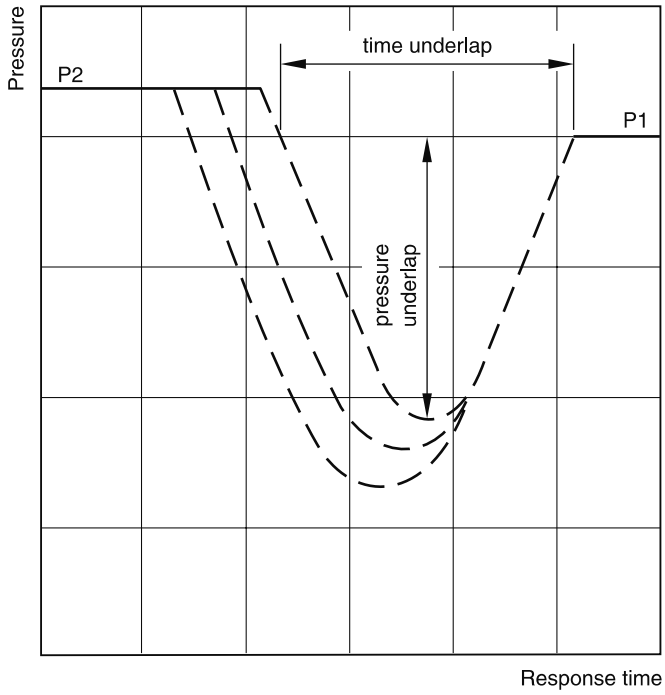

P1 = setting pressure
P2 = operating pressure

Time and pressure underlap depend on the characteristics of the specific system.

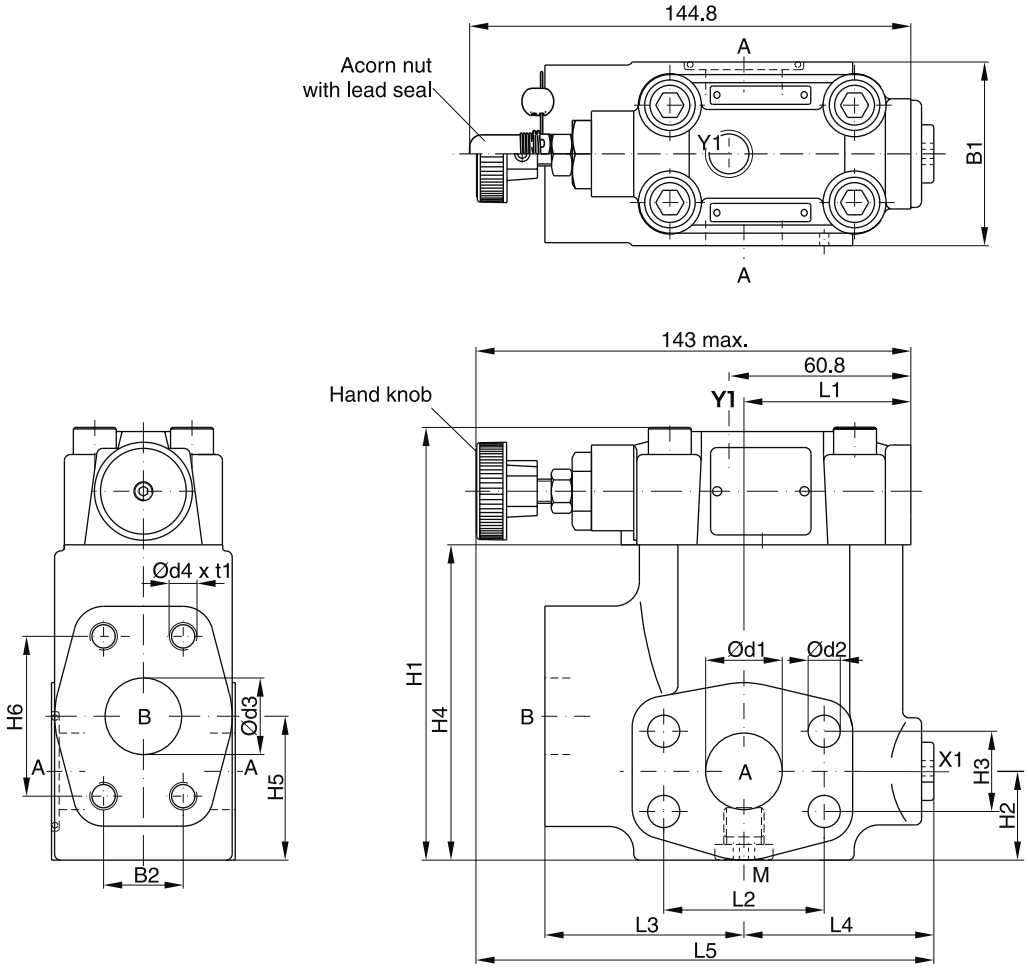

SAE61

Seal kits		
NG	NBR	FPM
06	S16-91850-0	S16-91850-5
08	S16-91851-0	S16-91851-5
10	S16-91852-0	S16-91852-5

NG	B1	B2	H1	H2	H3	H4	H5	H6	L1	L2	L3	L4	L5	d1	d2	d3	d4 (option 152)	t1
06	60	22.2	119	29.5	22.2	81	41	47.6	50.3	47.6	63	60	152	19	10.5	19	3/8”-16 UNC (M10)	20
08	60	26.2	141	30.5	26.2	103	47	52.4	55.8	52.4	65	62	149	25	10.5	25	3/8”-16 UNC (M10)	23
10	75	30.2	151	37.5	30.2	113	65	58.7	57.8	58.7	61	68	150.5	32	12.5	30	7/16”-14 UNC (M12)	22

Port	Function	Port size		
		R5S06	R5S08	R5S10
A (2)	Pressure	¾" SAE61	1" SAE61	1¼" SAE61
B	Secondary port	¾" SAE61	1" SAE61	1¼" SAE61
X1	External pilot port [1]	G¼"	G¼"	G¼"
Y1	External drain	G¼"	G¼"	G¼"
M	Pressure gauge	G¼"	G¼"	G¼"

[1] Closed when supplied.

R5S UK.INDD CM 16.04.15

Pilot operated pressure reducing valves series R5R have a similar design as the subplate mounted R4R series. The SAE flanges allow to mount the valves directly on the inlet flanges of actuators to achieve a very compact design.

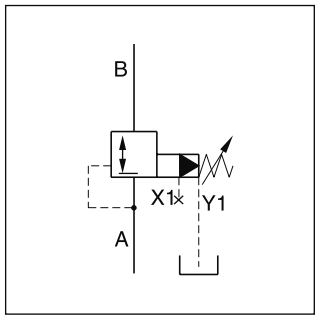

Features

- Pilot operated with manual adjustment
- Normally closed to avoid unintended motion
- 2-port body with SAE61 flange
- 3 sizes (SAE ¾", 1", 1¼")
- 3 pressure stages
- 3 adjustment modes
  - Hand knob
  - Acorn nut with lead seal
  - Cylinder lock
- With optional vent function
- Flow direction B → A

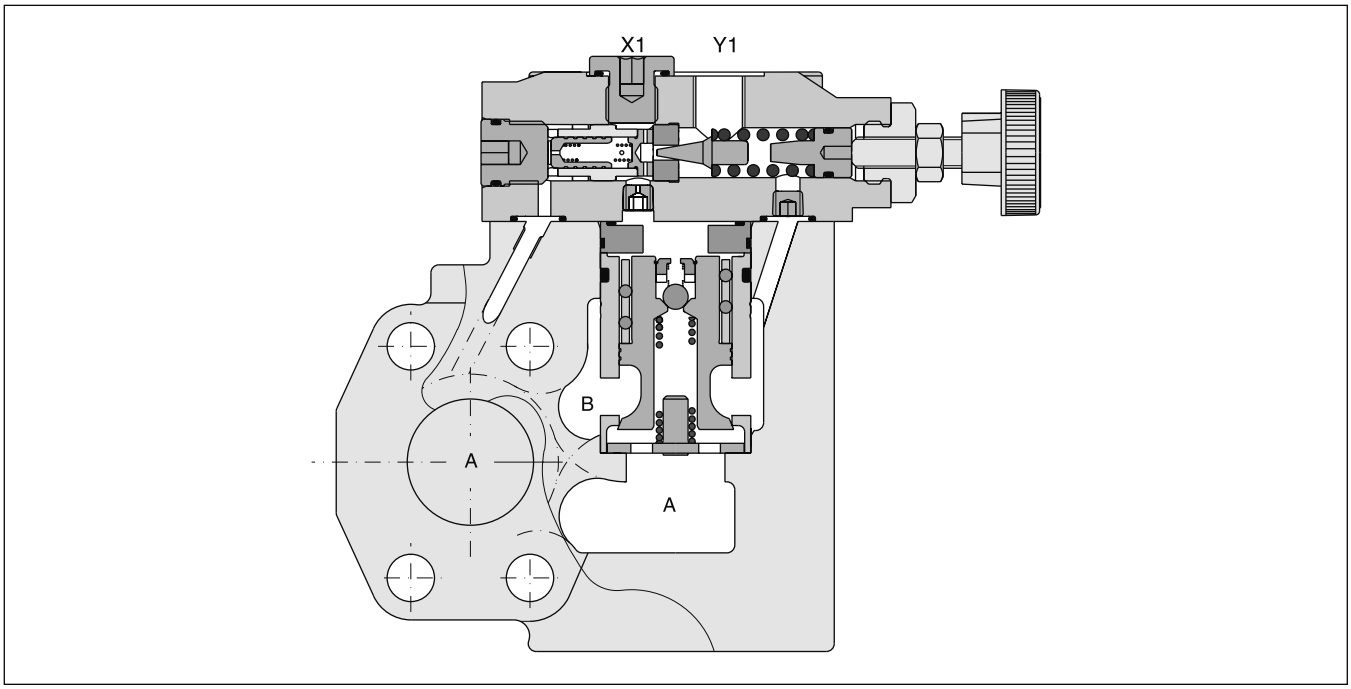

Ordering Code

R5R	☐	–	☐	8	☐	☐	6	☐	☐	A	☐	☐
Pressure reducing valve	Nominal size		SAE61 Interface	2-port body (X1, Y1 = G¼")	Pressure stages	Adjust-ment	External drain from Y1 port	Switching type	Solenoid voltage	Design series	Seals	Options

Code	Port size
06	SAE ¾"
08	SAE 1"
10	SAE 1¼"

SAE61		
Code	Size	Max. pressure [bar]
4	10	280
5	06/08	350

Code	Pressure stages
1	up to 105 bar
3	up to 210 bar
5 [1]	up to 350 bar

Code	Adjustment
1	Hand knob
3	Acorn nut with lead seal
4	Cylinder lock

Code	Seals
1	NBR
5	FPM

Code	Solenoid voltage
omit	Standard w/o vent function
G0R	12 V=
G0Q	24 V=
GAR [2]	98 V=
GAG [2]	205 V=
W30	110 V / 50 Hz 120 V / 60Hz
W31	230 V / 50 Hz 240 V / 60 Hz

Code	Switching type
omit	Standard w/o vent function
09	Solenoid not activ. unpress. circulation
11	Solenoid activated unpress. circulation

Further options on request

9

[1] R5R10-485 up to 280 bar.
[2] To be used in combination with rectifier plugs at 120 VAC / 230 VAC power supply.

General							
Size			**06 (¾")**	**08 (1")**	**10 (1¼")**		
Mounting			Flanged according to SAE61				
Mounting position			unrestricted				
Ambient temperature		[°C]	-20...+60				
$MTTF_D$ value		[years]	75				
Weight		[kg]	4.0	4.6	5.9		
Hydraulic							
Max. operating pressure		[bar]					
	Ports A, B, X1		350	350	280		
	Port Y1		30	30	30		
Flow direction			B → A				
Pressure stages		[bar]	105, 210, 350				
Nominal flow		[l/min]	90	300	500		
Fluid			Hydraulic oil according to DIN 51524				
Fluid temperature		[°C]	-20...+70 (NBR: -25...+70)				
Viscosity	permitted	[cSt] / [mm^2/s]	20...400				
	recommended	[cSt] / [mm^2/s]	30...80				
Filtration			ISO 4406 (1999); 18/16/13				
Electrical							
Duty ratio			100% ED; CAUTION: coil temperature up to 150 °C possible				
Protection class			IP65 in accordance with EN 60529 (with correctly mounted plug-in connector)				
		Code	G0R	G0Q	GAR	GAG	W30	W31
Supply voltage		[V] [V]	12 V =	24 V =	98 V =	205 V =	110 at 50 Hz 120 at 60 Hz	230 at 50 Hz 240 at 60 Hz
Tolerance supply voltage		[%]	±10	±10	±10	±10	±5	±5
Current consumption	hold	[W]	2.72	1.29	0.33	0.13	0.6 / 0.55	0.3 / 0.27
	in rush	[W]	2.72	1.29	0.33	0.13	2.5 / 2.4	1.25 / 1.2
Power consumption	hold	[ms]	32.7	31	31.9	28.2	70/70 VA	70/70 VA
	in rush		32.7	31	31.9	28.2	280/290 VA	280/290 VA
Solenoid connection			Connector as per EN175301-803, solenoid identification as per ISO 9461					
Wiring min.		[mm^2]	3 x 1.5 recommended					
Wiring length max.		[m]	50 recommended					

Reduced pressure pA versus flow Q
R5R06 [1)]

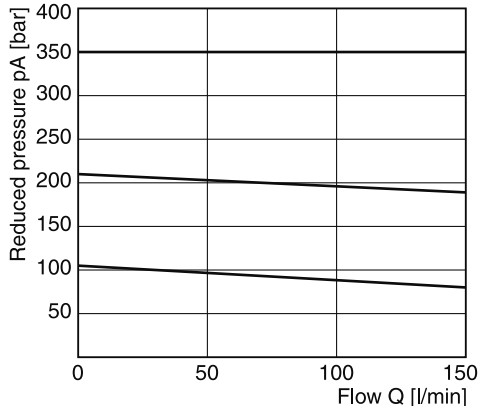

Minimum pressure curve

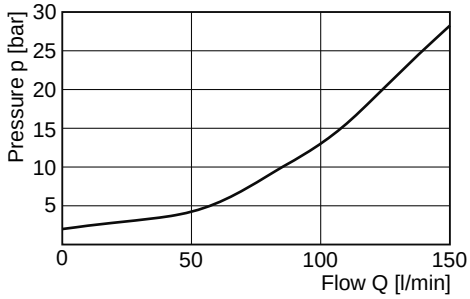

Reduced pressure pA versus flow Q
R5R08 [1)]

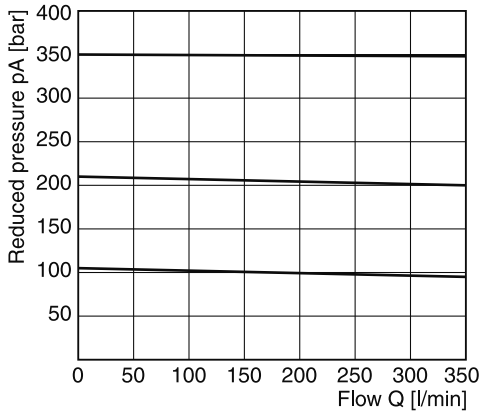

Minimum pressure curve

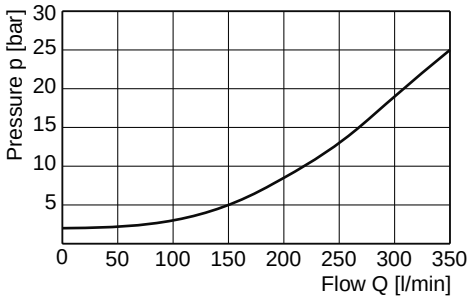

9

Reduced pressure pA versus flow Q
R5R10 [1)]

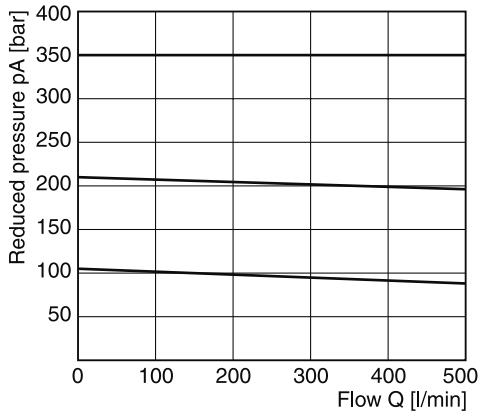

Minimum pressure curve

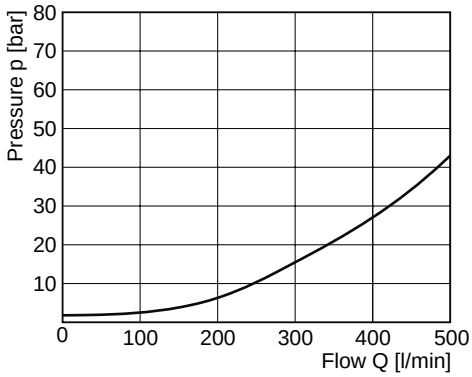

All characteristic curves measured with HLP46 at 50 °C.

[1)] Measured at 350 bar primary pressure pB.

R5R

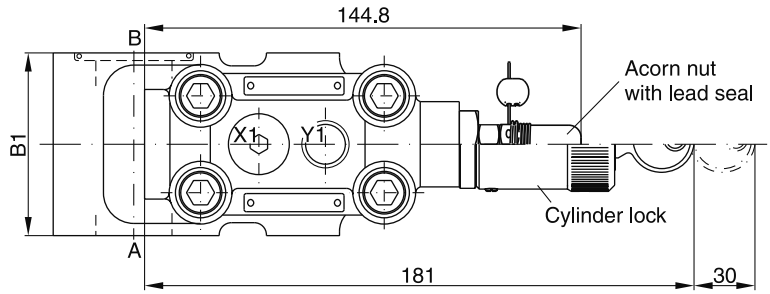

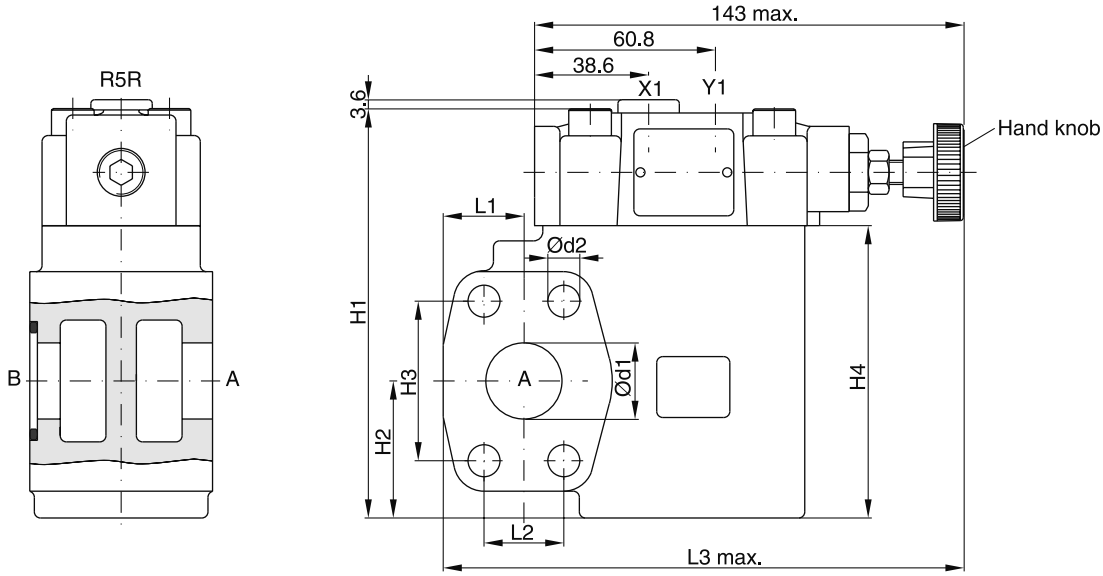

Seal kits		
NG	NBR	FPM
06	S16-91850-0	S16-91850-5
08	S16-91851-0	S16-91851-5
10	S16-91852-0	S16-91852-5

NG	B1	H1	H2	H3	H4	L1	L2	L3	d1	d2
06	60	131.6	37	47.6	90	24.6	22.2	152	19	10.5
08	60	137.6	45	52.4	96	26.5	26.2	171	25	10.5
10	75	150.6	48	58.7	109	34.0	30.2	179	32	12.5

Port	Function	Port size		
		R5R06	R5R08	R5R10
B	Inlet pressure	¾" SAE61	1" SAE61	1¼" SAE61
A	Reduced outlet pressure	¾" SAE61	1" SAE61	1¼" SAE61
Y1	External drain	G¼"	G¼"	G¼"
X1	Pressure gauge	G¼"	G¼"	G¼"

R5R UK.INDD CM 18.02.15

R5R with vent function

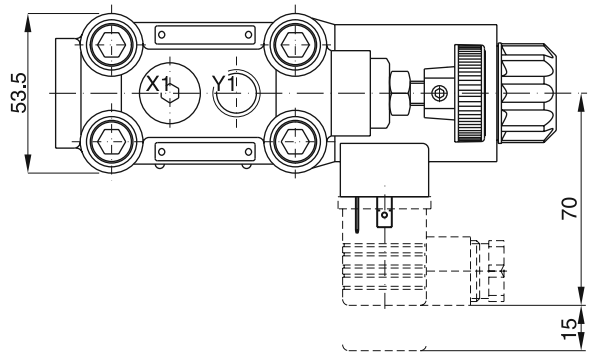

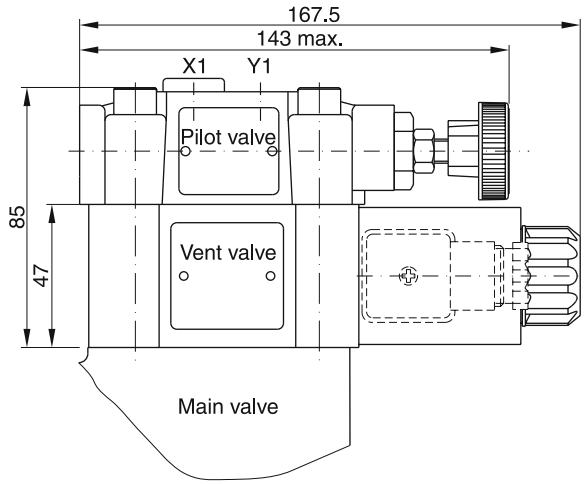

Seal kits	
NBR	**FPM**
DC solenoid	
S56-40609-0	S56-40609-5
AC solenoid	
S26-35237-0	S26-35237-5

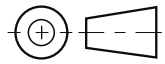

9

Code	External drain
11	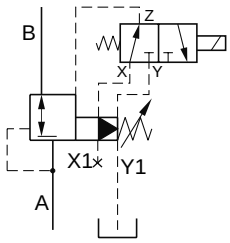
09	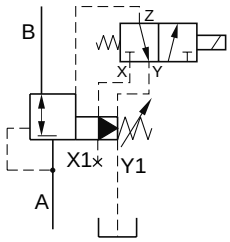

Proportional pressure relief valves series R5V*P2 are based on the mechanically adjusted series R5V. The additional proportional unit between the mechanical pilot valve and the main stage allows continuous pressure adjustment.

The optimum performance can be achieved in combination with the digital amplifier module PCD00A-400.

Features

- Continuous adjustment by proportional solenoid
- R5V with 2-port body
  - 3 sizes (SAE ¾", 1", 1¼")
  - SAE61 flange
- R5V with 3-port body
  - 4 sizes (SAE ¾", 1", 1¼", 1½")
  - SAE61 and SAE62 flange
- 3 pressure stages
- With mechanical maximum pressure adjustment

R5V*P2 2-port

R5V*P2 3-port

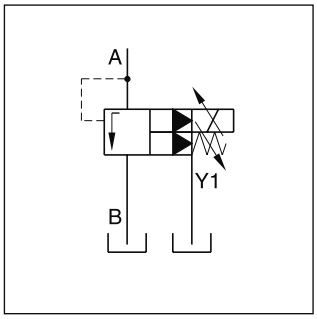

R5V*P2 2-port

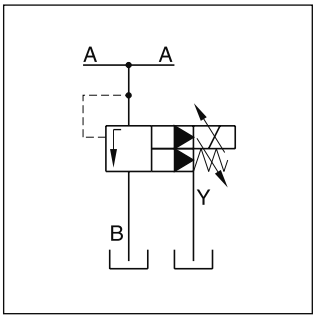

R5V*P2 3-port

R5V*P2 2-port

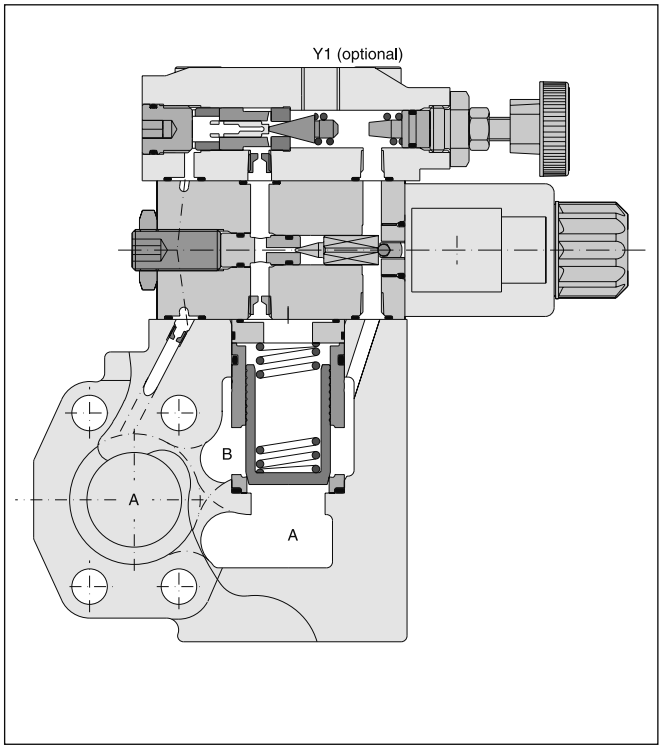

R5V*P2 3-port

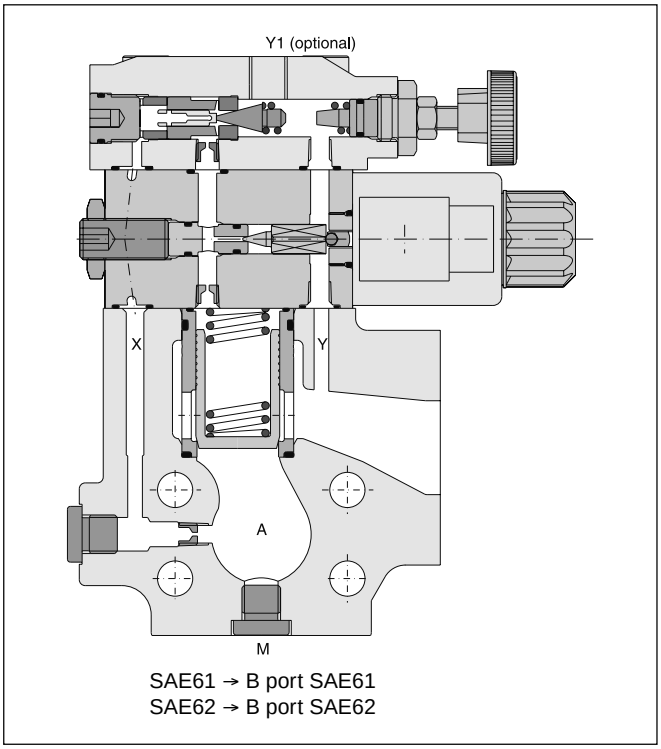

SAE61 → B port SAE61
SAE62 → B port SAE62

9

R5V	□	–	□	□	□	□	□	P2	G0R	A	□	□	□
Proportional pressure relief valve	**Nominal size**		**SAE interface**	**Pilot ports**	**Pressure stages**	**Adjust-ment**	**Pilot oil**	**Propor-tional pressure control**	**Solenoid voltage 12 V 2.1 A [4]**	**Design**	**Seals**	**Design series** (not required for ordering)	**Options**

Code	Port size
06	SAE ¾"
08	SAE 1"
10	SAE 1¼"
12 [1]	SAE 1½"

SAE61		
Code	Size	Max. pressure [bar]
3	12	210
4	10	280
5	06/08	350
SAE62		
Code	Size	Max. pressure [bar]
6 [1]	06/08/10/12	350

2-port body	
Code	pilot ports
7	Y1 = G¼" [2]
3-port body	
Code	pilot ports
9	Y1 [2], X1, M = G¼"

Code	Options
070	Metric 3-port body for R5V10 SAE62: Pressure ports (A): SAE62 with 15 mm through holes (for M14), Tank port: SAE61 (M12)
152 [5]	3-port body with metric threads

Code	Seals
1	NBR
5	FPM

Code	Pilot oil drain line
2	internal
6	external from Y1-port

Code	Adjustment
1	Hand knob
3	Acorn nut with lead seal

Code	Pressure stages
1	up to 105 bar
3	up to 210 bar
5 [3]	up to 350 bar

9

[1] Only R5V 3port.
[2] Y1 only available at external drain (pilot oil code 6).
[3] R5V10-4*5 up to 280 bar.
[4] Onboard electronics on request.
[5] R5V08 SAE62: Tank port SAE61 (M10).

General						
Size			**06 (¾")**	**08 (1")**	**10 (1¼")**	**12 (1½")**
Mounting			Flanged according to SAE61 (size 12 = SAE62)			
Mounting position			unrestricted			
Ambient temperature		[°C]	-20...+60			
$MTTF_D$ value		[years]	75			
Weight	R5V 2-port	[kg]	5.8	6.4	7.7	—
	R5V 3-port	[kg]	5.4	6.4	7.0	9.8
Hydraulic						
Max. operating pressure		[bar]				
	SAE61 Ports A, B		350	350	280	210
	Port Y1		30	30	30	30
	SAE62 Ports A, B		350	350	350	350
	Port Y1		30	30	30	30
Pressure stages		[bar]	105, 210, 350			
Nominal flow		[l/min]	90	300	600	600
Fluid			Hydraulic oil according to DIN 51524			
Fluid temperature		[°C]	-20...+70 (NBR: -25...+70)			
Viscosity permitted		[cSt] / [mm^2/s]	20...400			
Viscosity recommended		[cSt] / [mm^2/s]	30...80			
Filtration			ISO 4406 (1999); 18/16/13			
Electrical (proportional solenoid)						
Duty ratio			100 % ED; CAUTION: coil temperature up to 150 °C possible			
Protection class			IP65 in accordance with EN 60529 (with correctly mounted plug-in connector)			
Code			G0R			
Supply voltage		[V]	12 V =			
Max. current		[A]	2.1			
Coil resistance at 20 °C		[Ohm]	4.28			
Solenoid connection			Connector as per EN 175301-803			
Power amplifier, recommended			PCD00A-400			

Signal/pressure curve R5V*P2

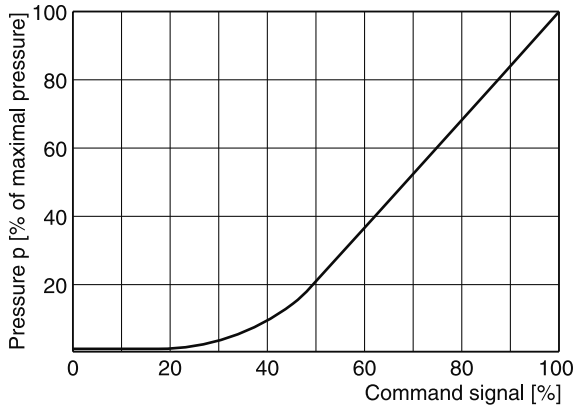

p/Q performance curve [1)]

R5V06*P2

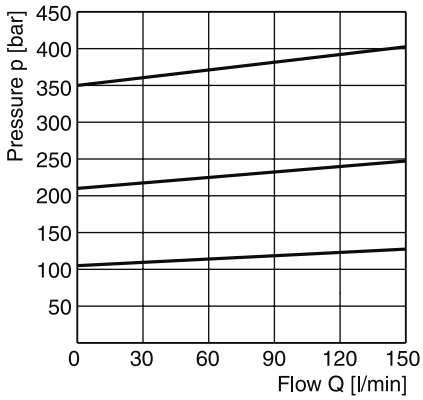

R5V08*P2

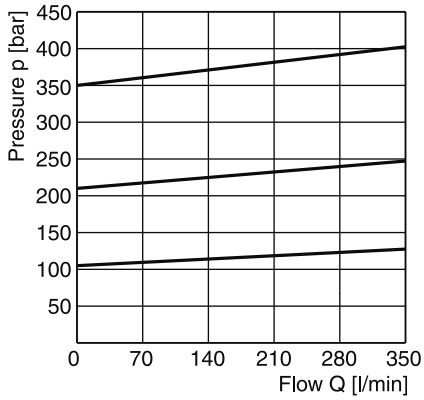

R5V10*P2

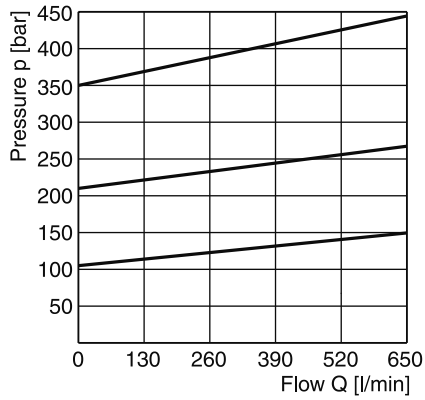

9

Minimum pressure curve [1)]

R5V06*P2

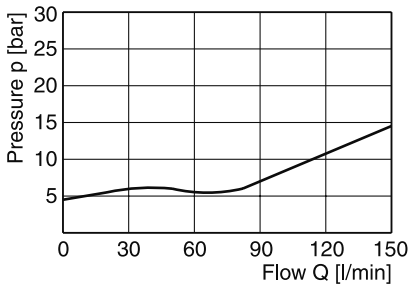

R5V08*P2

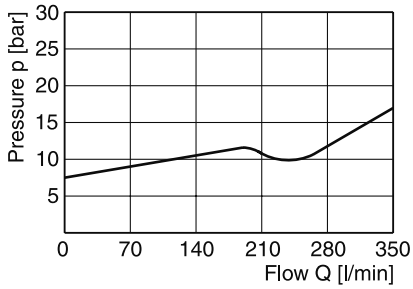

R5V10*P2

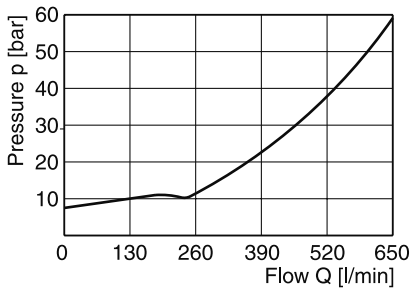

All characteristic curves measured with HLP46 at 50 °C.

[1)] The performance curves are measured with external drain. For internal drain the tank pressure has to be added to curve.

R5V*P2 2-port

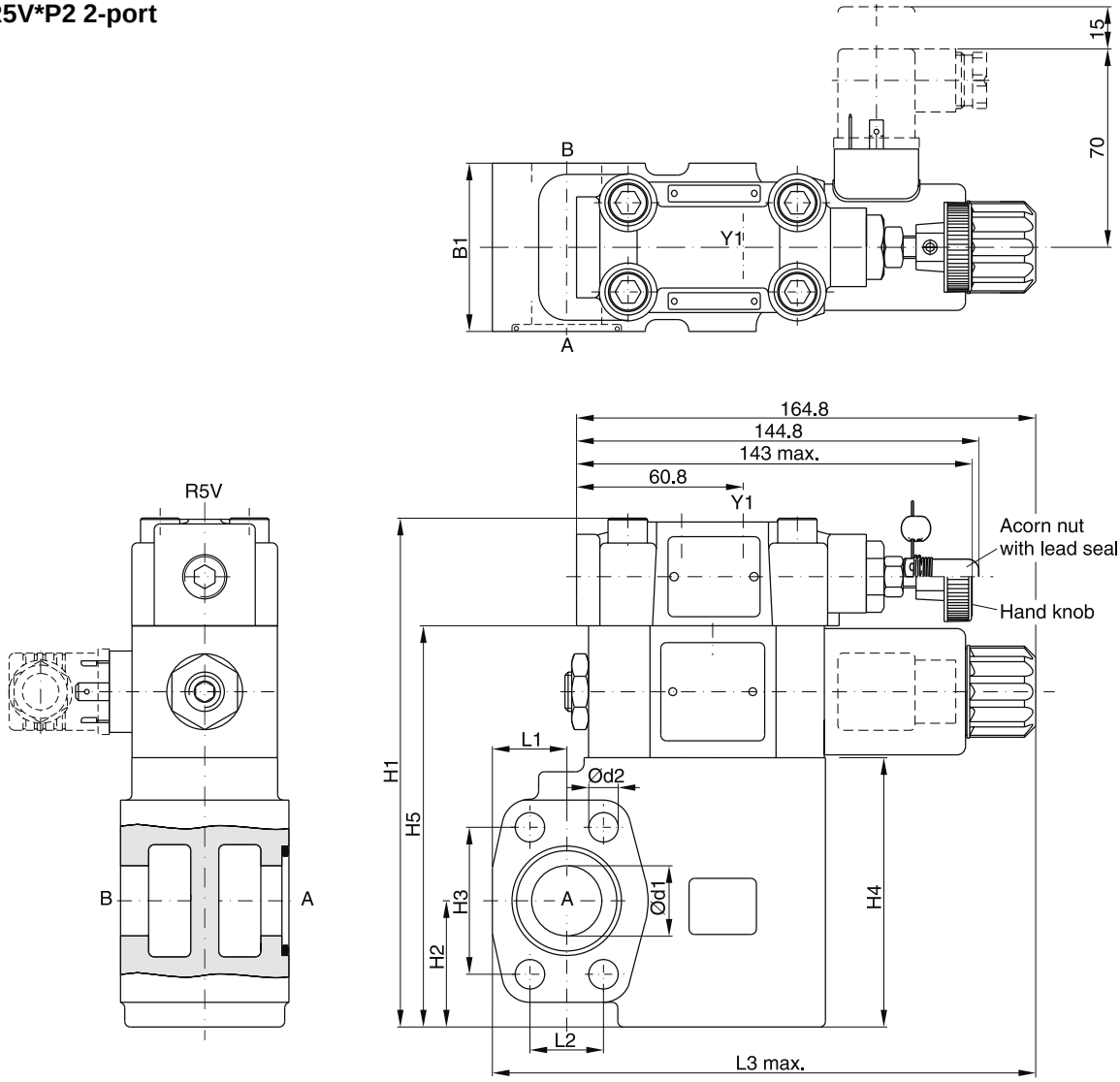

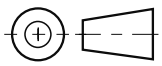

9

SAE61

Seal kits		
NG	**NBR**	**FPM**
06	S16-91850-0	S16-91850-5
08	S16-91851-0	S16-91851-5
10	S16-91852-0	S16-91852-5
Prop. section P2 *	S26-58473-0	S26-58473-5

NG	B1	H1	H2	H3	H4	H5	L1	L2	L3	d1	d2
06	60	175	37	47.6	90	137	24.6	22.2	174	19	10.5
08	60	181	45	52.4	96	143	26.5	26.2	193.6	25	10.5
10	75	194	48	58.7	109	156	34.0	30.2	201	32	12.5

Port	Function	Port size		
		R5V06	**R5V08**	**R5V10**
A	Pressure	¾" SAE61	1" SAE61	1¼" SAE61
B	Tank	¾" SAE61	1" SAE61	1¼" SAE61
Y1	External drain	G¼"	G¼"	G¼"

* Please combine seal kit of one size with seal kit of Prop. section P2 for complete seal kit.

R5VP2 UK.INDD CM 16.03.15

R5V*P2 3-port

Seal kits		
NG	NBR	FPM
06	S16-91850-0	S16-91850-5
08	S16-91851-0	S16-91851-5
10	S16-91852-0	S16-91852-5
12	S26-27421-0	S26-27421-5
Prop. section P2 *	S26-58473-0	S26-58473-5

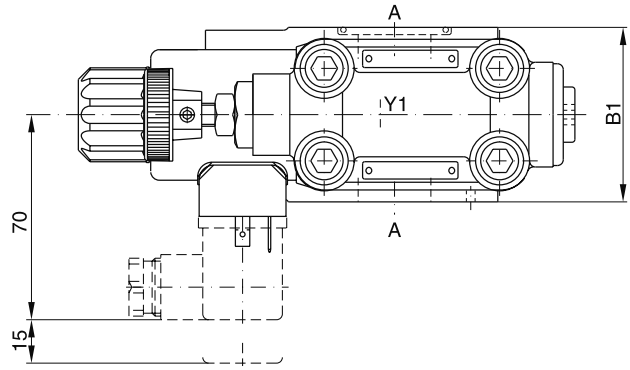

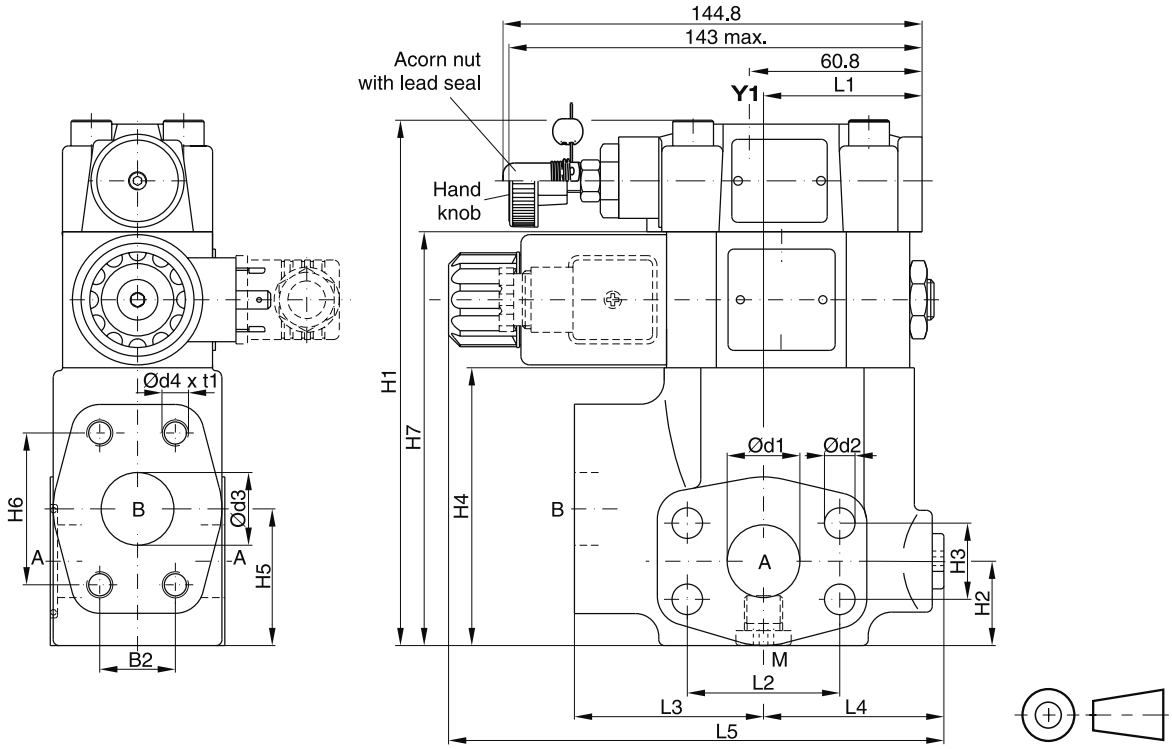

9

SAE61

NG	B1	B2	H1	H2	H3	H4	H5	H6	H7	L1	L2	L3	L4	L5	d1	d2	d3	d4 (option 152)	t1
06	60	22.2	166	29.5	22.2	81	41	47.6	128	50.3	47.6	63	60	174.6	19	10.5	19	3/8”-16 UNC (M10)	20
08	60	26.2	188	30.5	26.2	103	47	52.4	150	55.8	52.4	65	62	177	25	10.5	25	3/8”-16 UNC (M10)	23
10	75	30.2	198	37.5	30.2	113	65	58.7	160	57.8	58.7	61	68	179.1	32	12.5	30	7/16”-14 UNC (M12)	22
12	80	35.7	225	72	35.7	140	73	69.8	187	37.3	69.8	92.5	59.2	186.8	38	13.5	38	1/2”-13 UNC (M12)	27

SAE62

NG	B1	B2	H1	H2	H3	H4	H5	H6	L1	L2	L3	L4	L5	d1	d2	d3	d4 (option 152)	t1
06	60	23.8	119	29.5	23.8	81	41	50.8	50.3	50.8	63	60	152	19	10.5	19	3/8”-16 UNF (M10)	20
08	60	27.8	141	30.5	27.8	103	47	57.2	55.8	57.2	65	62	149	25	12.5	25	7/16”-14 UNC (M10)[1)]	22
10	75	31.8	151	37.5	31.8	113	65	66.7	57.8	66.7	61	68	150.5	32	13.5	30	1/2”-13 UNC (M12)	24
12	80	36.5	178	72	36.5	140	73	79.4	37.3	79.4	92.5	59.2	171.2	38	17	38	5/8”-11 UNC (M16)	33

Port	Function	Port size			
		R5V06	R5V08	R5V10	R5V12
A (2)	Pressure	¾" SAE61/62	1" SAE61/62	1¼" SAE61/62	1½" SAE61/62
B	Tank	¾" SAE61/62	1" SAE61/62	1¼" SAE61/62	1½" SAE61/62
Y1	External drain	G¼"	G¼"	G¼"	G¼"
M	Pressure gauge	G¼"	G¼"	G¼"	G¼"

* Please combine seal kit of one size with seal kit of Prop. section P2 for complete seal kit.
1) T-port SAE61.

R5VP2 UK.INDD CM 16.03.15

Proportional pressure reducing valves series R5R*P2 are based on the mechanically adjusted series R5R. The additional proportional unit between the mechanical pilot valve and the main stage allows continuous pressure adjustment.

The optimum performance can be achieved in combination with the digital amplifier module PCD00A-400.

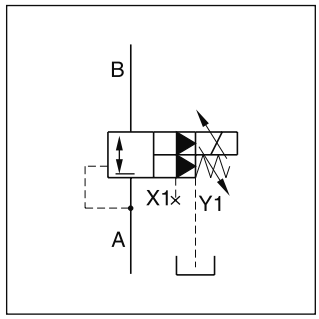

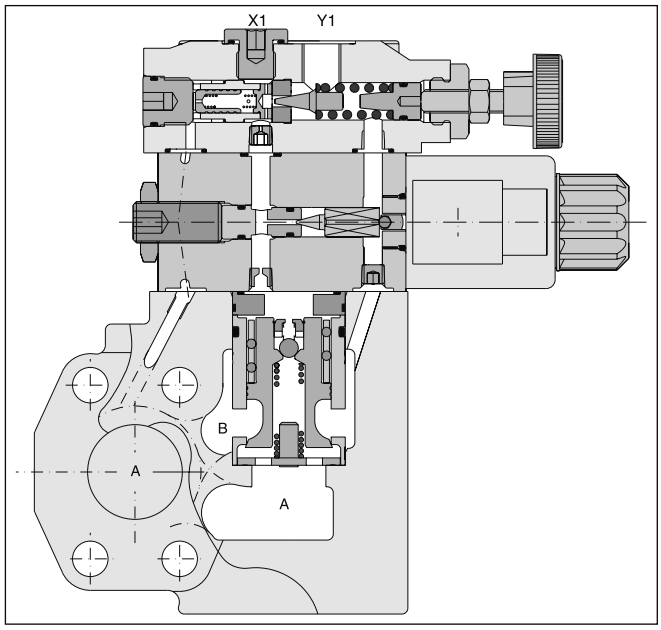

Features

- Continuous adjustment by proportional solenoid
- 2-port body with SAE61 flange
- 3 sizes (SAE ¾", 1", 1¼")
- 3 pressure stages
- With mechanical maximum pressure adjustment

Ordering code

R5R		–		8			6	P2	G0R	A		
Pressure reducing valve	Nominal size		SAE61 interface	Body 2-port (X1, Y1 = G¼")	Pressure stages	Adjust-ment	External drain from Y1-port	Propor-tional pressure control	Solenoid voltage 12 V 2.1 A	Design series	Seals	Options

Code	Port size
06	SAE ¾"
08	SAE 1"
10	SAE 1¼"

SAE61		
Code	Size	Max. pressure [bar]
4	10	280
5	06/08	350

Code	Pressure stages
1	up to 105 bar
3	up to 210 bar
5 [1)]	up to 350 bar

Code	Seals
1	NBR
5	FPM

Code	Adjustment
1	Hand knob
3	Acorn nut with lead seal

Further options on request

[1)] R5R10-485 up to 280 bar.

R5RP2 UK.INDD CM 03.03.15

Technical data

General					
Size			**06 (¾")**	**08 (1")**	**10 (1¼")**
Mounting			Flanged according to SAE61		
Mounting position			unrestricted		
Ambient temperature		[°C]	-20...+60		
$MTTF_D$ value		[years]	75		
Weight		[kg]	5.8	6.4	7.7
Hydraulic					
Max. operating pressure	Ports A, B, X1	[bar]	350	350	280
	Port Y1	[bar]	30	30	30
Pressure stages		[bar]	105, 210, 350		
Nominal flow		[l/min]	90	300	500
Fluid			Hydraulic oil according to DIN 51524		
Fluid temperature		[°C]	-20...+70 (NBR: -25...+70)		
Viscosity	permitted	[cSt] / [mm^2/s]	20...400		
	recommended	[cSt] / [mm^2/s]	30...80		
Filtration			ISO 4406 (1999); 18/16/13		
Electrical (proportional solenoid)					
Duty ratio			100 % ED; CAUTION: coil temperature up to 150 °C possible		
Protection class			IP65 in accordance with EN 60529 (with correctly mounted plug-in connector)		
Code			G0R		
Supply voltage		[V]	12 V =		
Max. current		[A]	2.1		
Coil resistance at 20 °C		[Ohm]	4.28		
Solenoid connection			Connector as per EN 175301-803		
Power amplifier, recommended			PCD00A-400		

Command / pressure curve

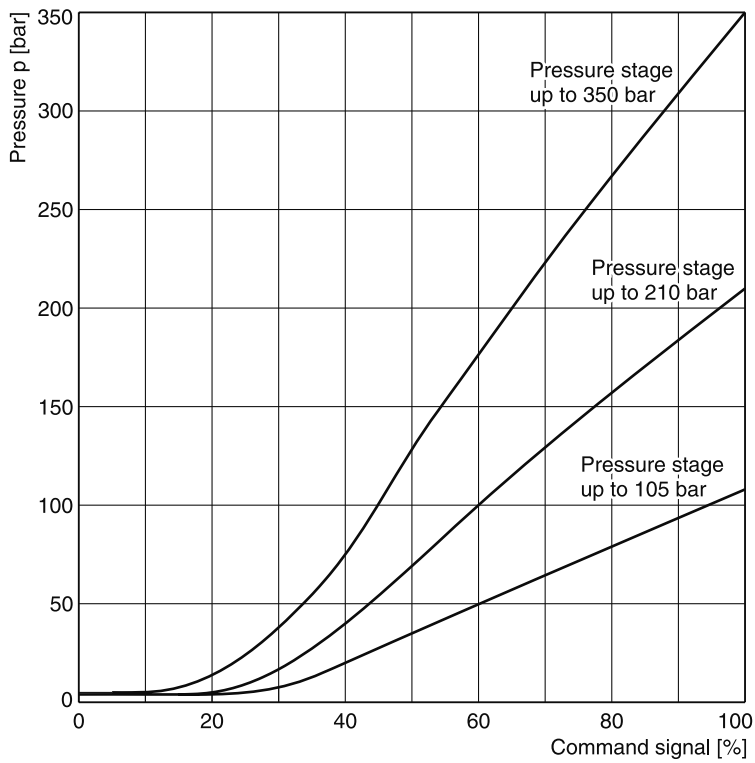

All characteristic curves measured with HLP46 at 50 °C.

Reduced pressure pA vs. flow Q
R5R06*P2 [1)]

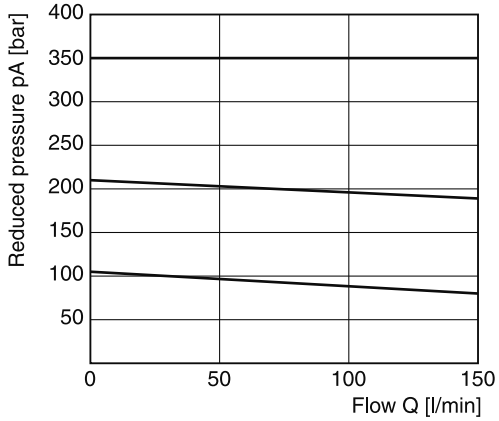

Minimum pressure curve

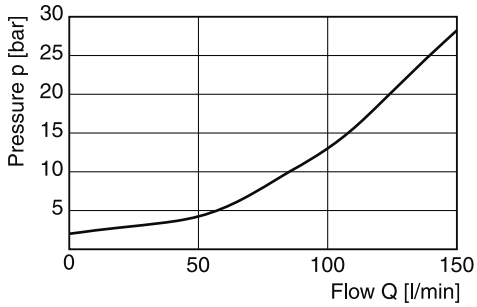

Reduced pressure pA vs. flow Q
R5R08*P2 [1)]

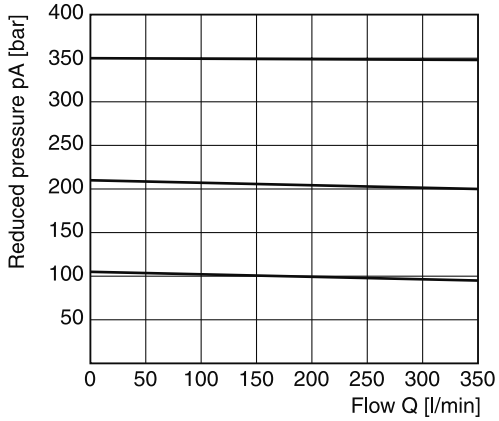

Minimum pressure curve

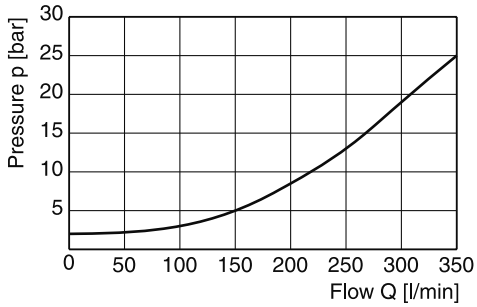

Reduced pressure pA vs. flow Q
R5R10*P2 [1)]

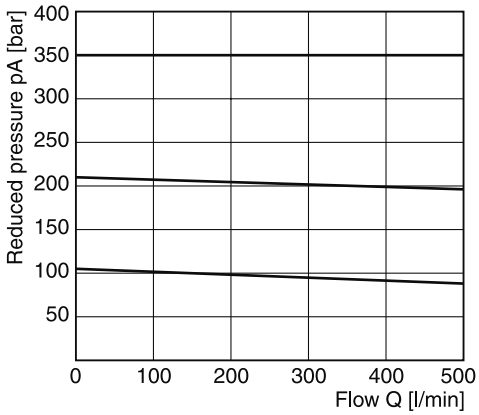

Minimum pressure curve

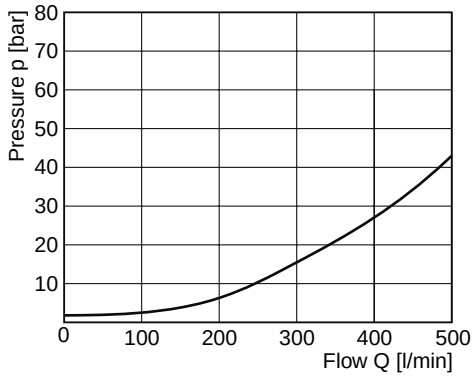

All characteristic curves measured with HLP46 at 50 °C.

[1)] Measured at 350 bar primary pressure pB.

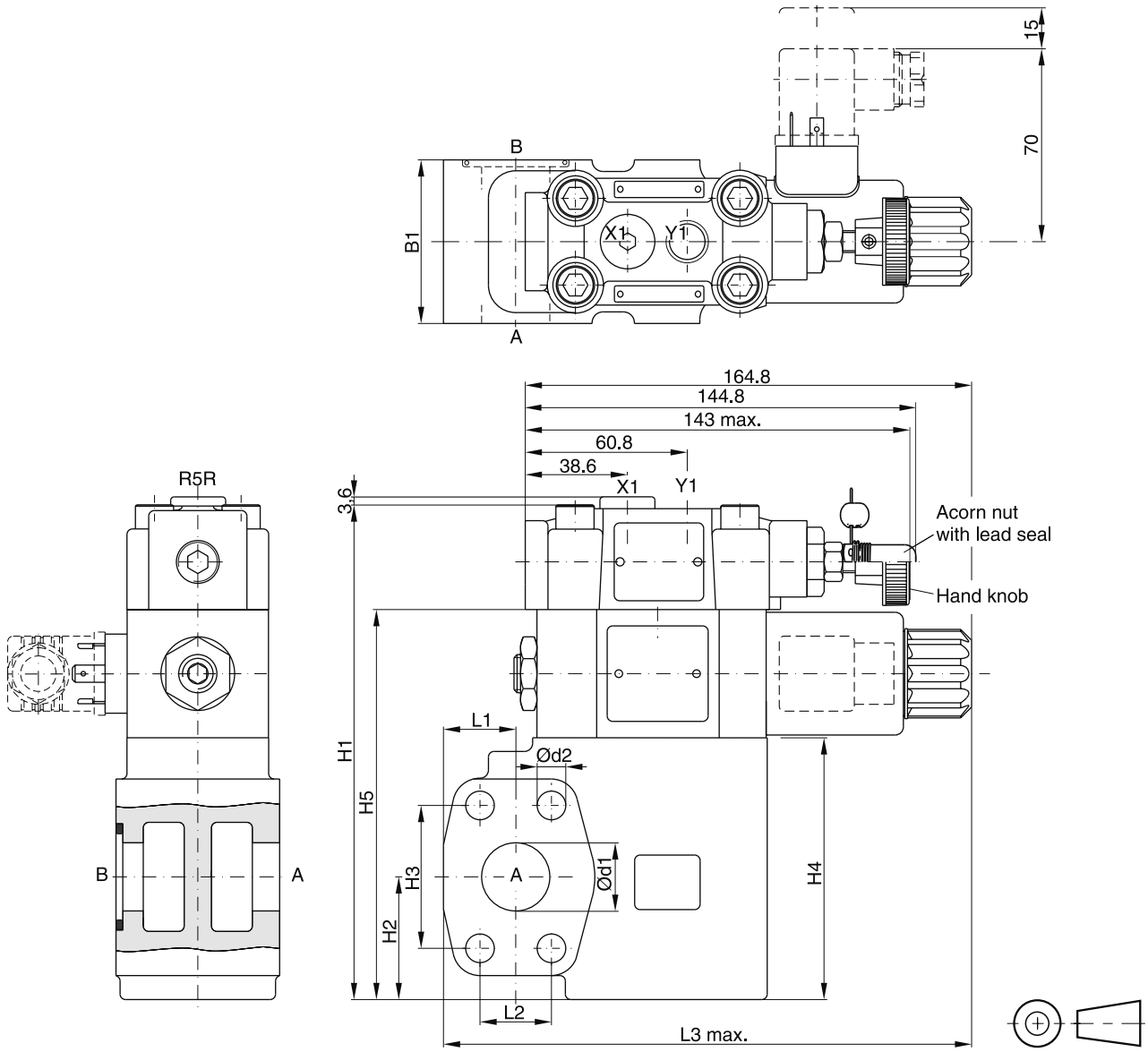

Seal kits		
NG	NBR	FPM
06	S16-91850-0	S16-91850-5
08	S16-91851-0	S16-91851-5
10	S16-91852-0	S16-91852-5
Prop. section P2 *	S26-58473-0	S26-58473-5

NG	B1	H1	H2	H3	H4	H5	L1	L2	L3	d1	d2
06	60	175	37	47.6	90	137	24.6	22.2	174	19	10.5
08	60	181	45	52.4	96	143	26.5	26.2	193.6	25	10.5
10	75	194	48	58.7	109	156	34.0	30.2	201	32	12.5

Port	Function	Port size		
		R5R06	R5R08	R5R10
B	Inlet pressure	¾" SAE61	1" SAE61	1¼" SAE61
A	Reduced outlet pressure	¾" SAE61	1" SAE61	1¼" SAE61
Y1	External drain	G¼"	G¼"	G¼"
X1	Pressure gauge	G¼"	G¼"	G¼"

* Please combine seal kit of one size with seal kit of Prop. section P2 for complete seal kit.

R5RP2 UK.INDD CM 03.03.15

Seat valves series D5S are designed for directional control functions. They enable individual hydraulic solutions for nominal flow up to 800 l/min due to a large variety of poppets, springs and covers, including shuttle valves, stroke limiters, solenoid valves (VV01) and position control.

A complete program is offered under the Parker brand:

Subplate mounted valves	(Series D4S - chapter 6)
SAE flange valves	(Series D5S - chapter 9)
Pipe mounted valves	(Series D4S - chapter 10)
Slip-in cartridges	(Series CAR - on request)

Features

- Leak-free seat valve design
- 2- and 3-port bodies
- SAE61 flange
- Numerous pilot options
- 4 sizes, SAE ¾", 1", 1 ¼", 1 ½"
- 6 poppet types

D5S 2-port

D5S 3-port

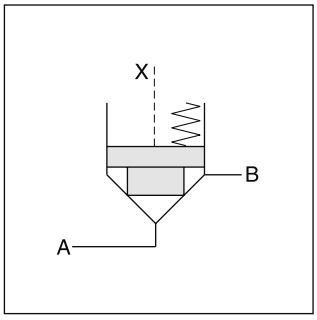

D5S 2-port

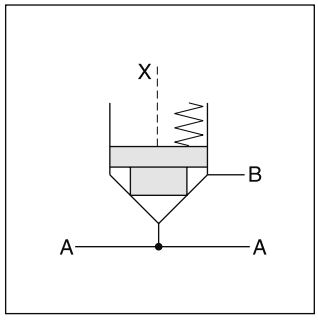

D5S 3-port

D5S 2-port

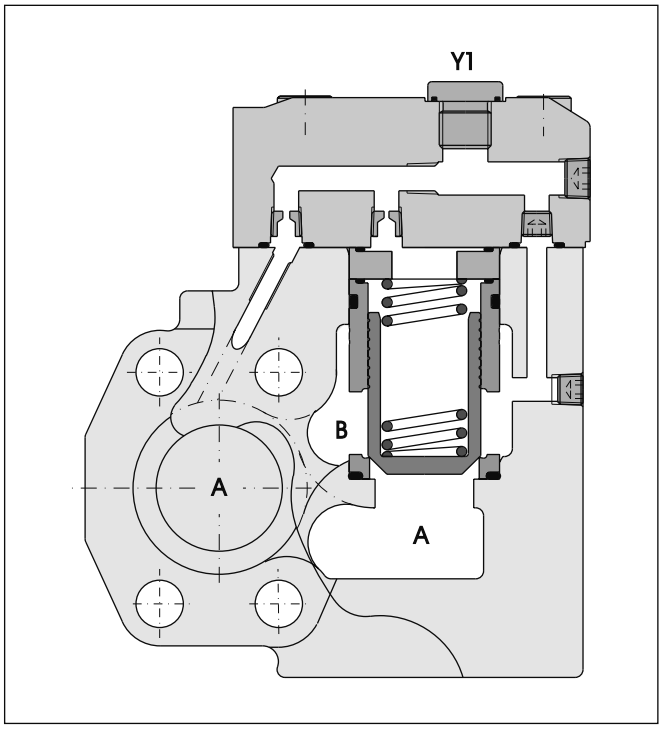

D5S 3-port

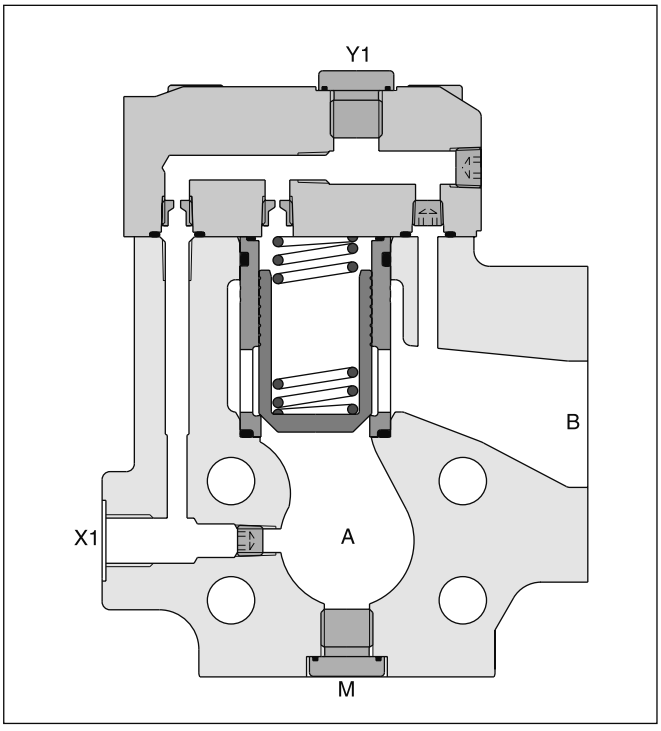

9

D5S	[ ]	–	[ ]	[ ]	[ ]	[ ]	[ ]	[ ]	[ ]	[ ]	B	[ ]	[ ]
Seat valve	Nominal size		Body	Pilot body configuration	Pilot cap	Sleeve	Spool type	Spring	Switching type	Solenoid voltage	Design series	Seals	Options

Code	Port size
06	SAE ¾"
08	SAE 1"
10	SAE 1¼"
12 [1]	SAE 1½"

Code	Body	Ports
5	3-port	Seat entry, A; X1, Y1, M = G¼"
7	2-port	Seat entry, A; X1, Y1 = G¼"
8	2-port	Annular entry, B; X1, Y1 = G¼"

Code	Pilot oil line in body
1	internal from A
2	internal from B
3	internal from A and B
4	external from X1
5	internal from B, external from X1

Code	Body	Ports	X	Y	Z	X-Y	X1	Y1	VV01
Standard									
1	2-/3-port	Pilot oil = pilot drain	⊖	●	⊖	○	—	●	—
2	2-/3-port	Pilot oil = pilot drain	●	⊖	⊖	○	—	●	—
3	2-port	Pilot oil = pilot drain	●	●	⊖	○	○	●	—
With solenoid valve (VV01)									
4	2-/3-port	Internal to B	⊖	○	⊖	●	—	●	○
5	2-port	Internal to B	●	○	⊖	●	○	●	○
6	2-/3-port	Ext. out of cap	⊖	○	⊖	●	—	○	●
7	2-port	Ext. out of cap	●	○	⊖	●	○	○	●
With stroke limiter (not for D5S06)									
A	2-/3-port	Pilot oil = pilot drain	⊖	●	⊖	—	●	—	—
B	2-/3-port	Pilot oil = pilot drain	●	⊖	—	—	●	—	—
C	2-port	Pilot oil = pilot drain	●	●	⊖	—	○	—	—

○ open bore ● closed bore ⊖ orifice Ø 1.2

Code	Sleeve
1	AA = 95 %, AB = 5 %
3	AA = 60 %, AB = 40 %

Code	Size	Poppet type	Sleeve
1	06, 08,10,12	With closed bottom and 15° chamfer (p_Z max. = p_A +20 bar)	1
2	06	With 0.8 dia. orifice at the bottom and 15°chamfer	1
	08, 10	With 1.2 dia. orifice at the bottom and 15°chamfer	1
4	06, 08,10,12	With closed bottom and 45° chamfer	1, 3
A [2]	08, 10, 12	Safety spool (for end position control only)	3
B [2]	08, 10, 12	Throttle spool, 10° chamfer	3
C [2]	08, 10, 12	Throttle spool, 3° chamfer	3

Code	Options
omit	Standard
013	Position control with protection

Code	Seals
1	NBR
5	FPM

Code	Solenoid voltage
omit	Standard w/o vent function
G0R	12 V=
G0Q	24 V=
GAR [4]	98 V=
GAG [4]	205 V=
W30	110 V / 50 Hz ; 120 V / 60 Hz
W31	230 V / 50 Hz ; 240 V / 60 Hz

Code	Switching type	
omit	Standard w/o vent function	
09	VV01 with manual override	de-energized: open
10	VV01 without manual override	
11	VV01 with manual override	de-energized: closed
12	VV01 without manual override	
CA	Shuttle valve	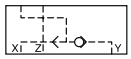
DA	Shuttle valve	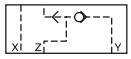
CB	VV01 code 09 and shuttle valve code CA	
CD	VV01 code 11 and shuttle valve code CA	
DB	VV01 code 09 and shuttle valve code DA	
DD	VV01 code 11 and shuttle valve code DA	
BH	VV01 code 10 and shuttle valve code CA and position control [3] with amplifier	
BK	VV01 code 12 and shuttle valve code CA and position control [3] with amplifier	
BN	VV01 code 10 and shuttle valve code DA and position control [3] with amplifier	
BQ	VV01 code 12 and shuttle valve code DA and position control [3] with amplifier	
BC	VV01 code 10 and position control [3] with amplifier	
BE	VV01 code 12 and position control [3] with amplifier	
BA	Position control [3] with amplifier	
BF	Position control [3] with amplifier and shuttle valve code CA	
BL	Position control [3] with amplifier and shuttle valve code DA	

Code	Spring (approx. cracking pressure [bar])					
	Sleeve Code 1		Sleeve Code 3			
	A -> B		A -> B		B -> A	
	D5S06	D5S08/12	D5S06	D5S08/12	D5S06	D5S08/12
1	2.8	3.5	6.5	6.5	9.5	11.0
2	0.5	0.5	1.0	1.0	1.5	1.7
3	0.3	0.3	0.6	0.6	0.9	1.0
4	2.2	2.2	4.0	3.5	5.5	6.0
5	—	9.0	—	16.0	—	28.0
6	1.2	1.2	2.0	2.2	3.0	3.8
7	3.0	—	8.0	—	12.0	—

[1] D5S 3-port only.
[2] Springs 2, 3 and 6 only.
[3] Position control for D5S08/10 only. Spring 2 or 4. Spool A and sleeve 3.
[4] To be used in combination with rectifier plugs at 120 VAC / 230 VAC power supply.

Examples see end of chapter.

Technical data

General						
Size			**06 (¾")**	**08 (1")**	**10 (1¼")**	**12 (1½")**
Mounting			Flanged according to SAE61			
Mounting position			unrestricted			
Ambient temperature		[°C]	-20...+60			
$MTTF_D$ value		[years]	150			
Weight	D5S 2-port	[kg]	3.6	4.1	5.4	—
	D5S 3-port	[kg]	3.4	4.4	5.0	7.8
Hydraulic						
Max. operating pressure		[bar]				
	SAE61 Ports A, B		350	350	280	210
	Port Y1		30	30	30	30
Nominal flow		[l/min]	180	360	600	800
Fluid			Hydraulic oil according to DIN 51524			
Fluid temperature		[°C]	-20...+70 (NBR: -25...+70)			
Viscosity	permitted	[cSt] / [mm^2/s]	20...400			
	recommended	[cSt] / [mm^2/s]	30...80			
Filtration			ISO 4406 (1999); 18/16/13			

Electrical (solenoid)							
Duty ratio			100 % ED; CAUTION: coil temperature up to 150 °C possible				
Protection class			IP65 in accordance with EN 60529 (with correctly mounted plug-in connector)				
Code			G0R	G0Q	GAR	GAG	W30	W31
Supply voltage		[V]	12 V =	24 V =	98 V =	205 V =	110 at 50 Hz 120 at 60 Hz	230 at 50 Hz 240 at 60 Hz
Tolerance supply voltage		[%]	±10	±10	±10	±10	±5	±5
Current consumption	hold	[A]	2.72	1.29	0.33	0.13	0.6 / 0.55	0.3 / 0.27
	in rush	[A]	2.72	1.29	0.33	0.13	2.5 / 2.4	1.25 / 1.2
Power consumption	hold	[W]	32.7	31	31.9	28.2	70 / 70 VA	70 / 70 VA
	in rush	[W]	32.7	31	31.9	28.2	280 / 290 VA	280 / 290 VA
Solenoid connection			Connector as per EN175301-803, solenoid identification as per ISO 9461					
Wiring min.		[mm2]	3 x 1.5 recommended					
Wiring length max.		[m]	50 recommended					

D5S pilot configuration

3-port	**2-port: seat entry**	**2-port: annular entry**	
standard			
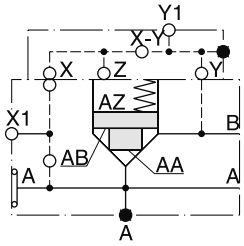	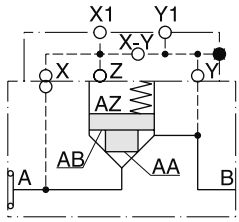	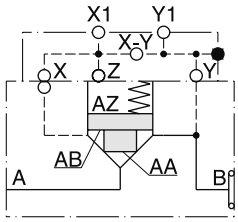	
with vent valve VV01			**VV01**
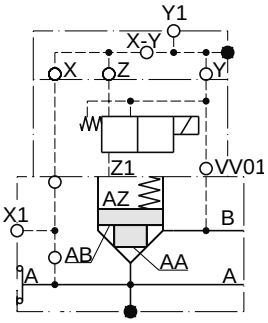	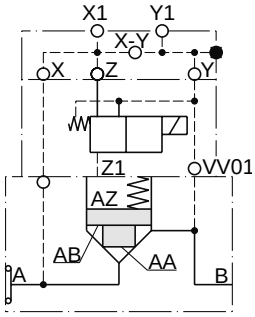	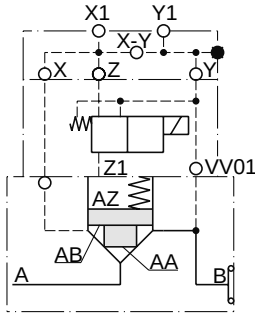	de-energized: open 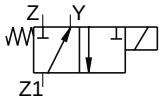 de-energized: closed 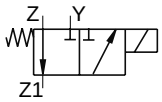

D5S UK.INDD CM 16.04.15

D5S 2-port

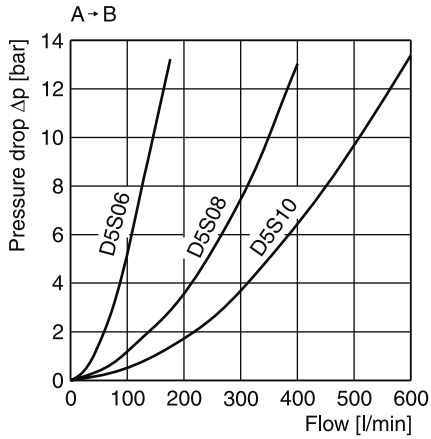

Leakage

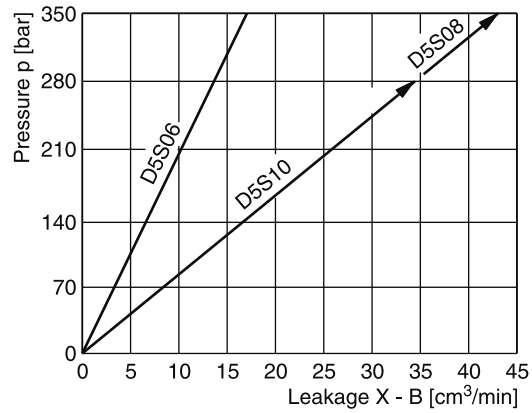

D5S 3-port

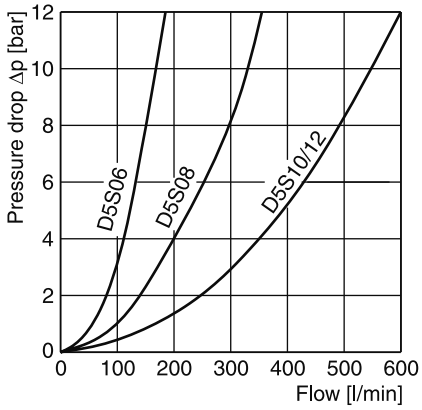

Leakage

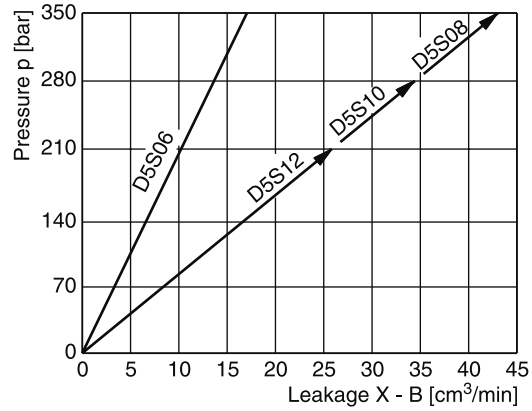

9

All characteristic curves measured with HLP46 at 50 °C.

Selection of cartridges

Sleeve 1, poppet 1	Sleeve 1, poppet 2	Sleeve 1, poppet 4	Sleeve 3, poppet 4	Sleeve 3, poppet A	Sleeve 3, poppet B/C
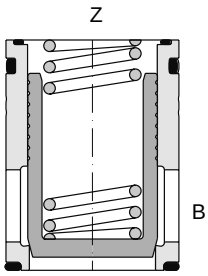	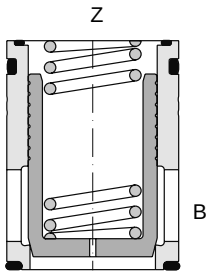	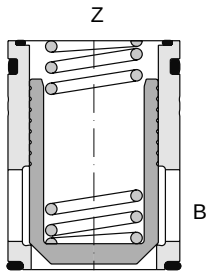	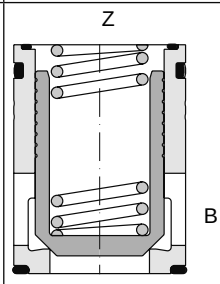	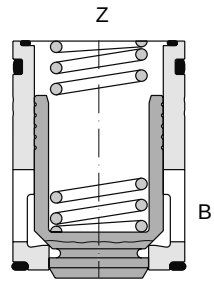	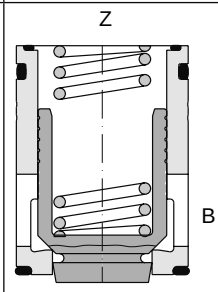
1 : 1.05 $A_A = 0.95\ A_C$ $A_B = 0.05\ A_C$ 15° chamfer	1 : 1.05 $A_A = 0.95\ A_C$ $A_B = 0.05\ A_C$ 15° chamfer orifice	1 : 1.05 $A_A = 0.95\ A_C$ $A_B = 0.05\ A_C$ 45° chamfer	1 : 1.67 $A_A = 0.6\ A_C$ $A_B = 0.4\ A_C$ 45° chamfer	1 : 1.67 $A_A = 0.6\ A_C$ $A_B = 0.4\ A_C$ 45° chamfer safety spool	1 : 1.67 $A_A = 0.6\ A_C$ $A_B = 0.4\ A_C$ 45° chamfer throttle spool

D5S 2-port

Seat entry

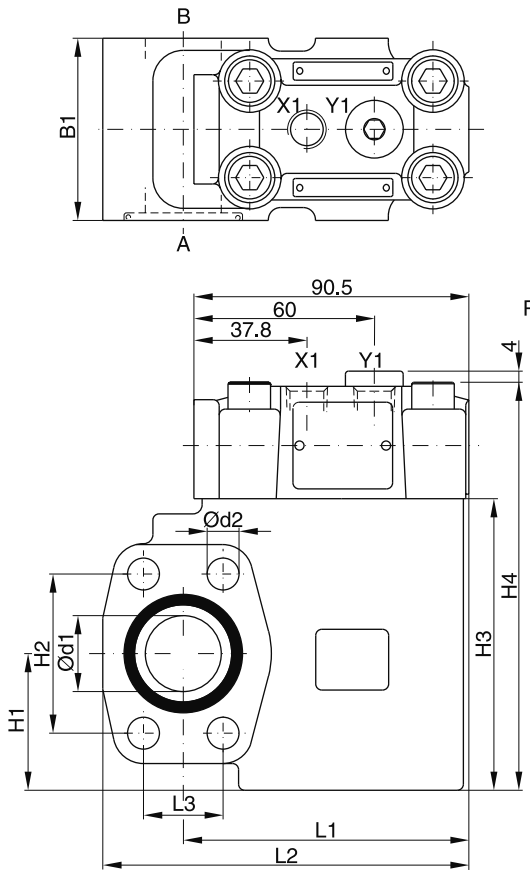

Ports X1 and Y1 optional

Annular entry

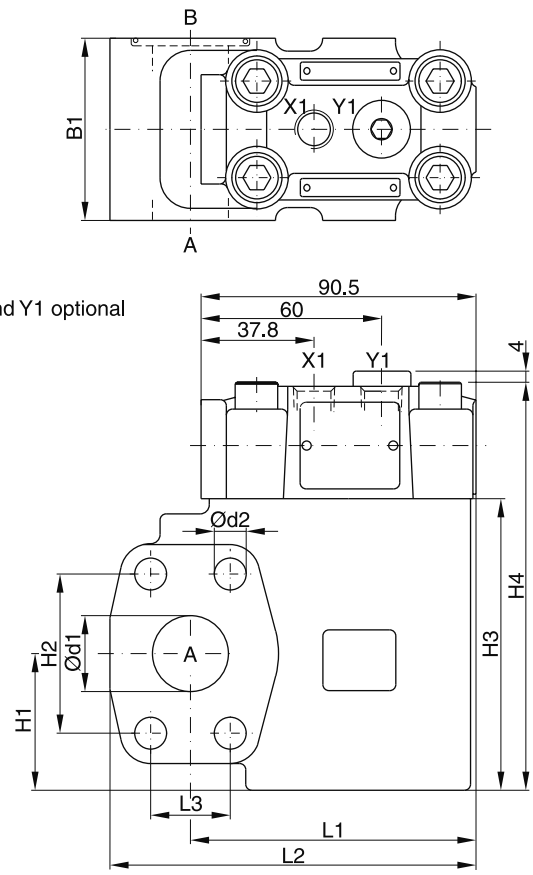

9

Seal kits		
NG	NBR	FPM
06	S16-91850-0	S16-91850-5
08	S16-91851-0	S16-91851-5
10	S16-91852-0	S16-91852-5

NG	l1	l2	l3	b1	h1	h2	h3	h4	d1	d2
06	77	101.0	22.2	60	37	47.6	90	127.6	19	10.5
08	94	120.5	26.2	60	45	52.4	96	133.6	25	10.5
10	94	128.0	30.2	75	48	58.7	109	146.6	32	12.5

Ports	Function	Port size		
		D5S06	D5S08	D5S10
A	Inlet or outlet	¾" SAE61	1" SAE61	1¼" SAE61
B	Outlet or inlet	¾" SAE61	1" SAE61	1¼" SAE61
X1	External pilot port	G¼"	G¼"	G¼"
Y1	External pilot drain	G¼"	G¼"	G¼"

D5S 3-port

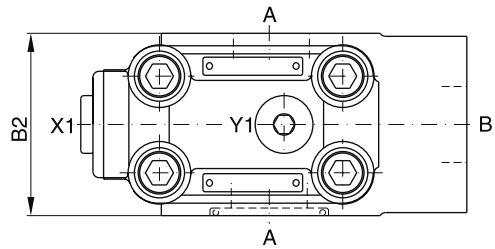

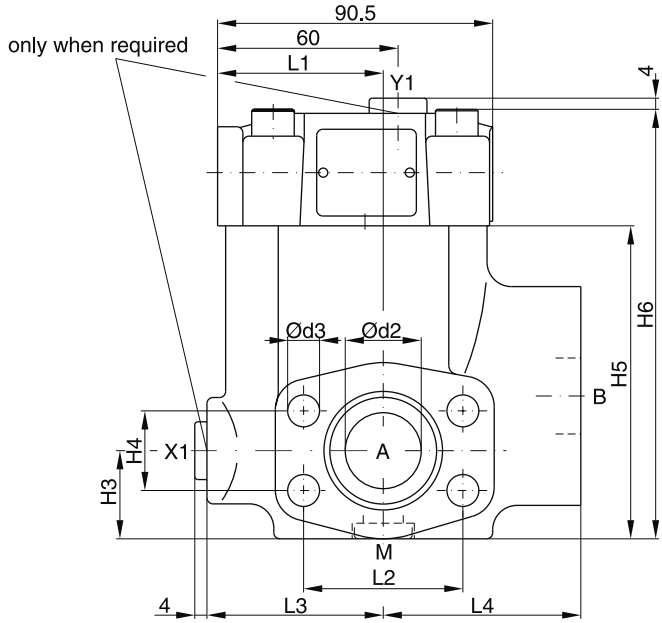

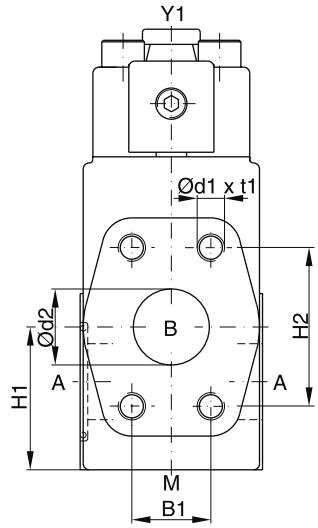

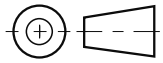

9

Seal kits		
NG	NBR	FPM
06	S16-91850-0	S16-91850-5
08	S16-91851-0	S16-91851-5
10	S16-91852-0	S16-91852-5
12	S26-27421-0	S26-27421-5

NG	l1	l2	l3	l4	b1	b2	h1	h2	h3	h4	h5	h6	d1	t1	d2	d3
06	49	47.6	56	63	22.2	60	41	47.6	29.5	22.2	82	119	3/8" UNC	20	19	10.5
08	55	52.4	58	65	26.2	60	47	52.4	30.5	26.2	103	141	3/8" UNC	23	25	10.5
10	57	58.7	64	61	30.2	75	65	58.7	37.5	30.2	113	150	7/16" UNC	22	30	12.5
12	37	69.8	55	93	35.7	80	73	69.8	72	35.7	140	178	1/2" UNC	27	38	13.5

Ports	Function	Port size			
		D5S06	D5S08	D5S10	D5S12
A (2x)	Inlet or outlet	¾" SAE61	1" SAE61	1¼" SAE61	1½" SAE61
B	Outlet or inlet	¾" SAE61	1" SAE61	1¼" SAE61	1½" SAE61
X1 [1)]	External pilot port	G¼"	G¼"	G¼"	G¼"
Y1	External pilot drain	G¼"	G¼"	G¼"	G¼"
M	Pressure gauge	G¼"	G¼"	G¼"	G¼"

[1)] Closed when supplied.

D5S UK.INDD CM 16.04.15

Example: pilot oil external from X1, pilot drain internal out of B

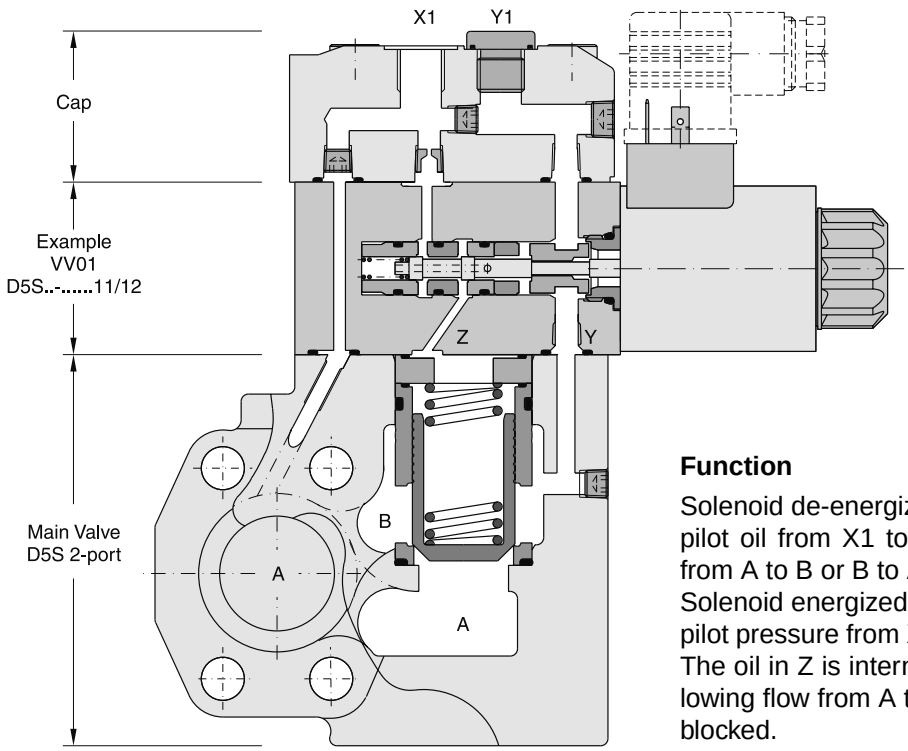

Function

Solenoid de-energized:
pilot oil from X1 to Z blocks the connection from A to B or B to A.
Solenoid energized:
pilot pressure from X1 is blocked in the VV01. The oil in Z is internally drained to port B. Allowing flow from A to B, while B to A remains blocked.

D5S with VV01 dimensions

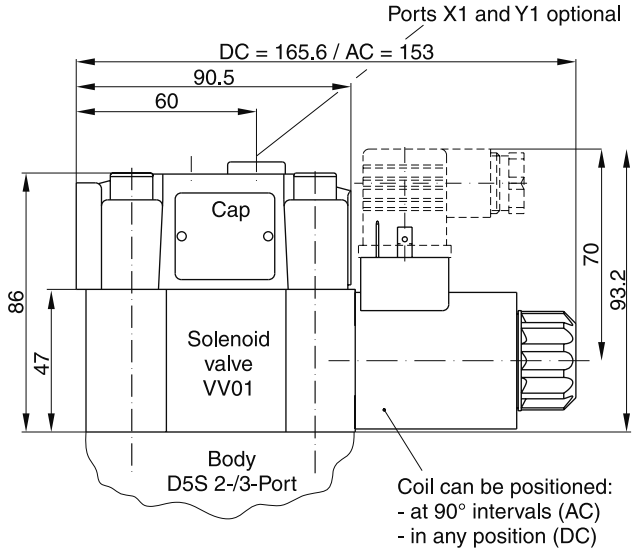

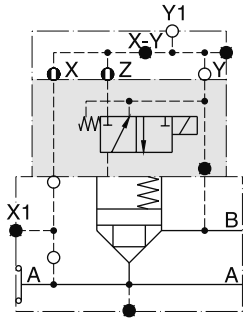

with manual override | without manual override

D5S..-.....09/10
Solenoid energized:
Blocked flow from A to B or B to A.
Solenoid de-energized:
Free flow from A to B or B to A.

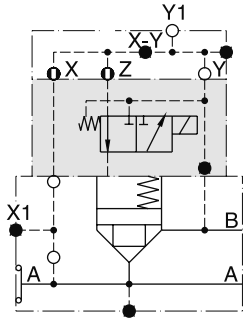

with manual override | without manual override

D5S..-.....11/12
Solenoid energized:
Free flow from A to B or B to A.
Solenoid de-energized:
Blocked flow from A to B or B to A.

Seal kits	
NBR	**FPM**
DC solenoid	
S56-40609-0	S56-40609-5
AC solenoid	
S26-35237-0	S26-35237-5

D5S UK.INDD CM 16.04.15

D5S with position control

Position control by proximity switch (incl. amplifier). Valve open: proximity switch activated. This proximity switch is pressure proof and has no wearing parts.

Note: Position control for D5S08 and D5S10 only.

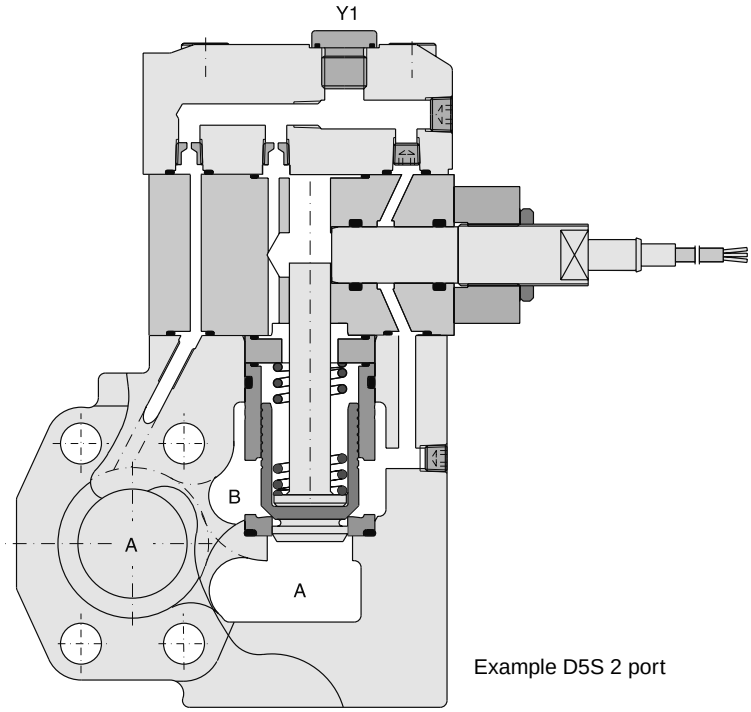

Example D5S 2 port

D5S with position control dimensions

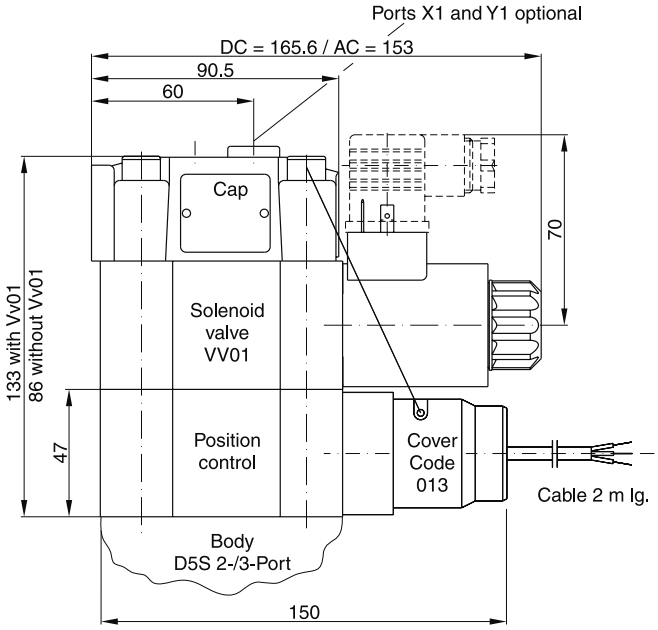

Technical data (proximity switch)

Function		PNP, contact
Supply voltage (Us)	[VDC]	10...30
Supply voltage ripple	[%]	≤ 10
Current consumption	[mA]	max. 8
Residual voltage L-signal	[V]	Us - 2.2 at I_{max}
Output current (I)	[mA]	≤ 200
Protection class		IP67
Ambient temperature	[C°]	-25...+70
Wire cross section	[mm^2]	3 x 0.5

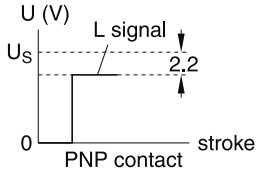

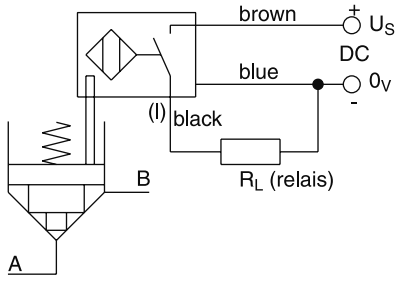

D5S stroke limiter

Example: D5S 3-port

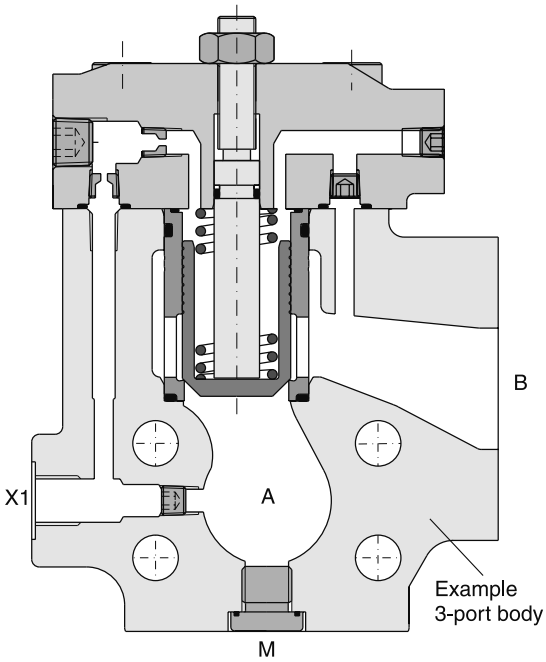

X1 = external pilot-oil (optional)

Note:

Stroke limiter not for use with D5S06, solenoid valve VV01, shuttle valve and position control.

Stroke limiter dimensions

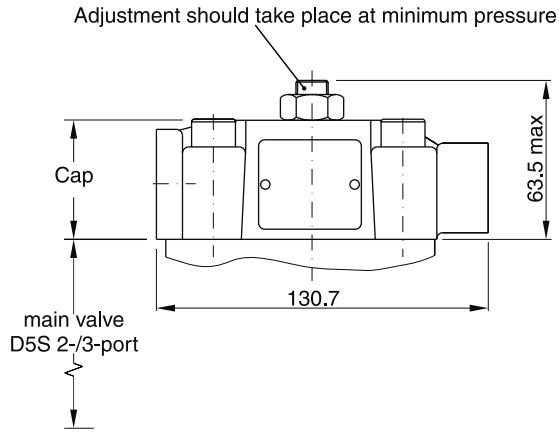

Example D5S 2-port:
D5S08-74C...
D5S10-74C...

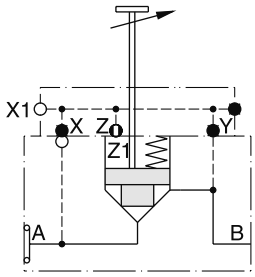

Example D5S 3-port:
D5S08-54A...
D5S10-54A...
D5S12-54A...

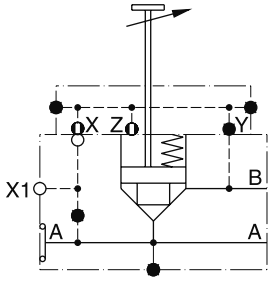

D5S with shuttle valve

Dimensions

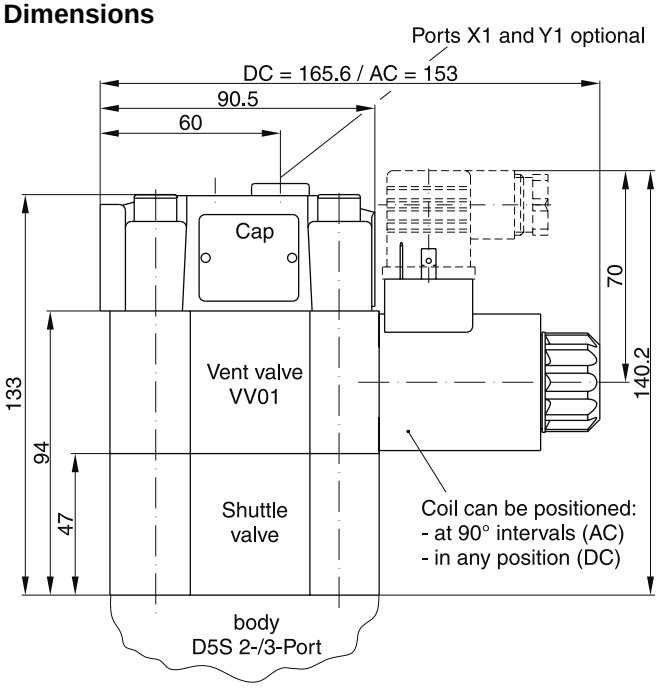

Shuttle valve only in connection with vent valve VV01.

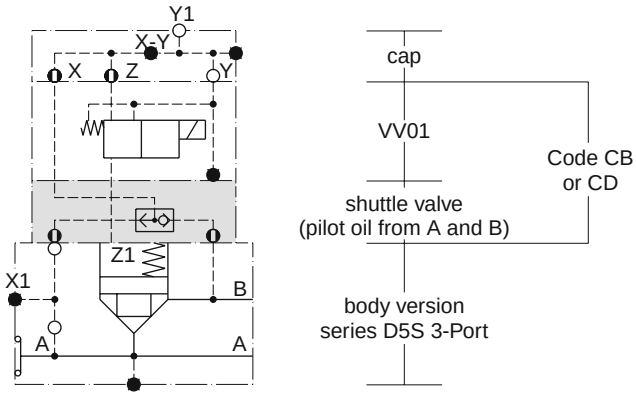

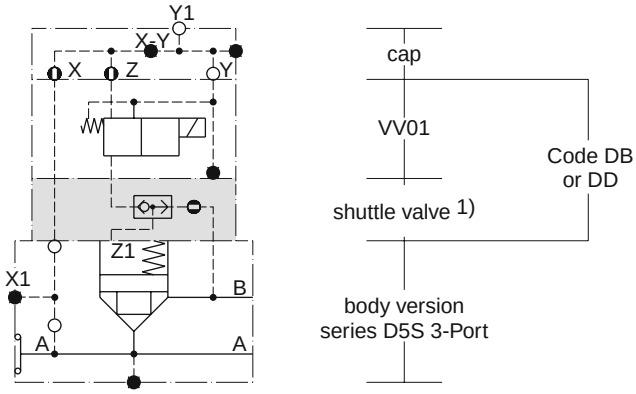

1) Pilot oil from A and B, from B to A check valve function

9

D5S 2-port

Seat entry

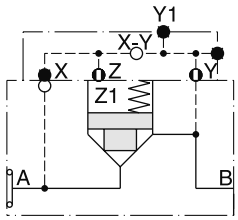

D5S..-722

Pilot oil: internal from B

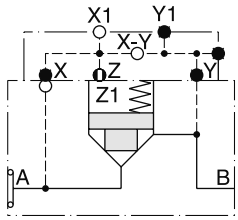

D5S..-743

Pilot oil: external from X1

Annular entry

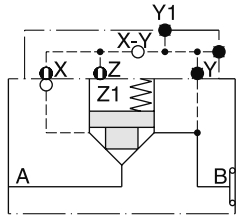

D5S..-821

Pilot oil: internal from B

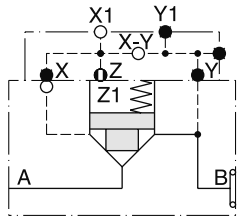

D5S..-843

Pilot oil: external from X1

Stroke limiter D5S 2-port

Seat entry

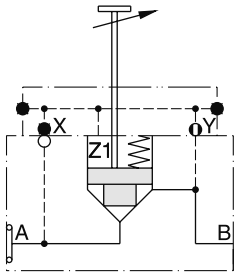

D5S08-72B
10
Pilot oil: internal from B

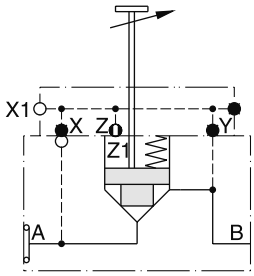

D5S08-74C
10
Pilot oil: external from X1

Annular entry

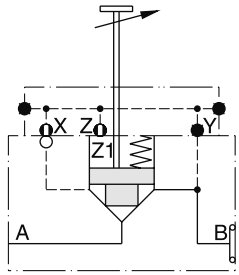

D5S08-82A
10
Pilot oil: internal from B

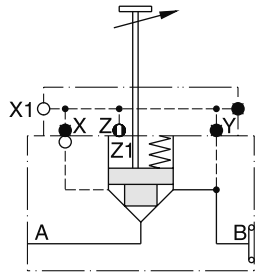

D5S08-84C
10
Pilot oil: external from X1

D5S 3-port

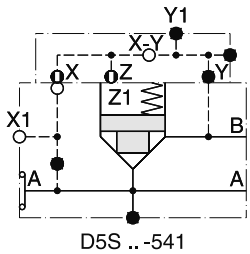

D5S .. -541

Pilot oil: external from X1

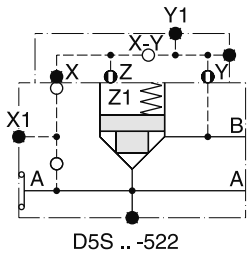

D5S .. -522

Pilot oil: internal from B

Stroke limiter D5S 3-port

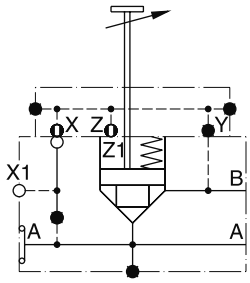

D5S08-54A
10
12
Pilot oil: external from X1

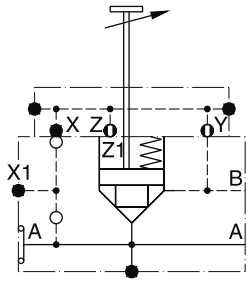

D5S08-52B
10
12
Pilot oil: internal from B

9

D5S 2-port with solenoid valve VV01

Seat entry

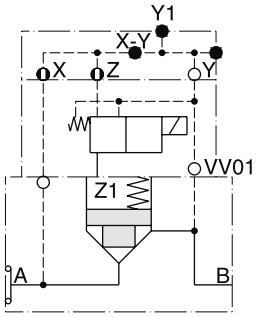

D5S..-714...09
10
11
12
Pilot oil: internal from A
Pilot drain: internal to B

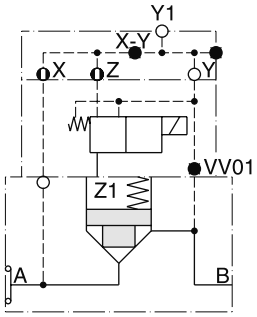

D5S..-716...09
10
11
12
Pilot oil: internal from A
Pilot drain: external out of Y1

Annular entry

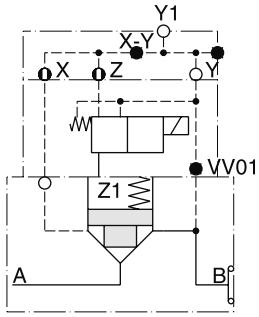

D5S..-826...09
10
11
12
Pilot oil: internal from B
Pilot drain: external out of Y1

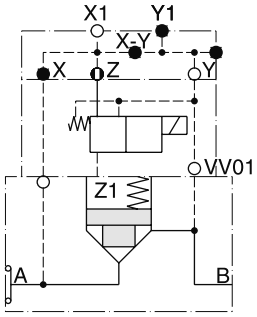

D5S..-745...09
10
11
12
Pilot oil: external from X1
Pilot drain: internal to B

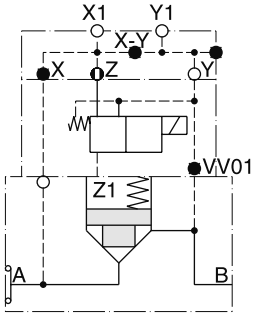

D5S..-747...09
10
11
12
Pilot oil: external from X1
Pilot drain: external out of Y1

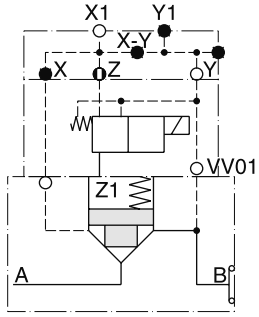

D5S..-845...09
10
11
12
Pilot oil: external from X1
Pilot drain: internal to B

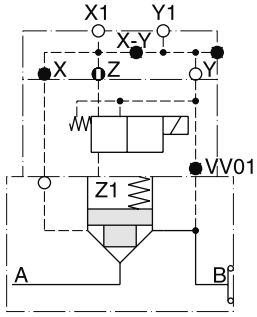

D5S..-847...09
10
11
12
Pilot oil: external from X1
Pilot drain: external out of Y1

D5S 2-port with with solenoid valve VV01 and shuttle valve

Seat entry

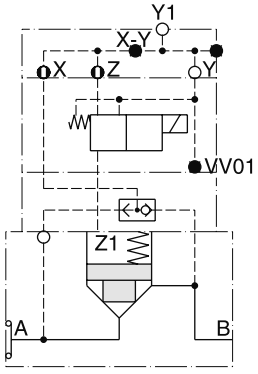

D5S..-736...CB
CD
Pilot oil: internal from A + internal from B
Pilot drain: external out of Y1

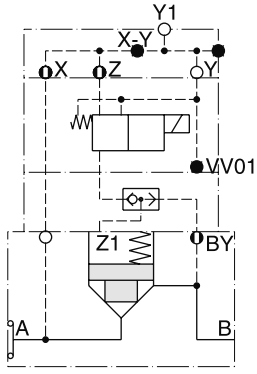

D5S..-736...DB
DD
Pilot oil: internal from A + internal from B
Pilot drain: external out of Y1

Annular entry

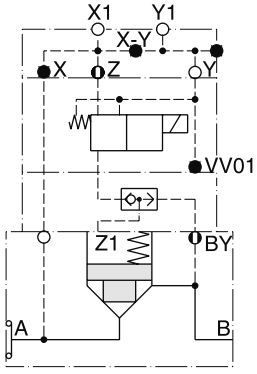

D5S..-757...DB
DD
Pilot oil: external from X1 + internal from B
Pilot drain: external out of Y1

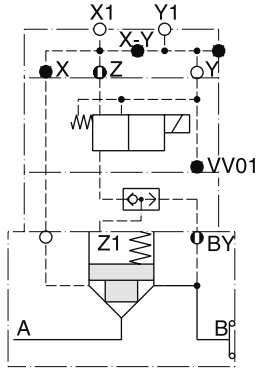

D5S..-857...DB
DD
Pilot oil: external from X1 + internal from B
Pilot drain: external out of Y1

D5S 3-port with solenoid valve VV01

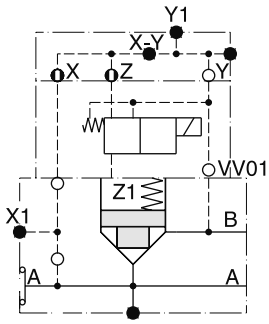

D5S .. -514...09
10
11
12
Pilot oil: internal from A
Pilot drain: internal to B

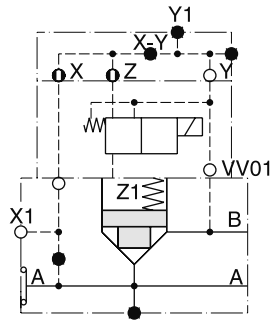

D5S .. -544...09
10
11
12
Pilot oil: external from X1
Pilot drain: internal to B

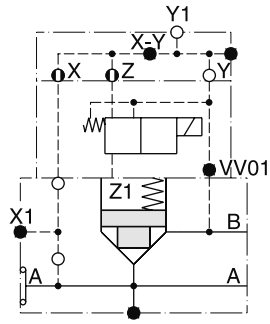

D5S .. -516...09
10
11
12
Pilot oil: internal from A
Pilot drain: external out of Y1

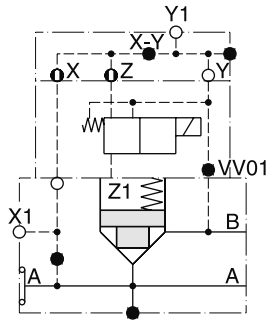

D5S .. -546...09
10
11
12
Pilot oil: external from X1
Pilot drain: external out of Y1

9

D5S 3-port with with solenoid valve VV01 and shuttle valve

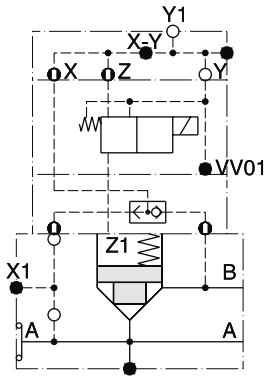

D5S .. -536...CB
CD
Pilot oil: internal from A + internal from B
Pilot drain: external out of Y1

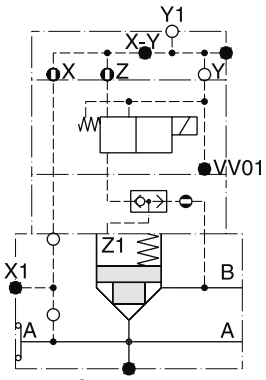

D5S .. -536...DB
DD
Pilot oil: internal from A + internal from B
Pilot drain: external out of Y1

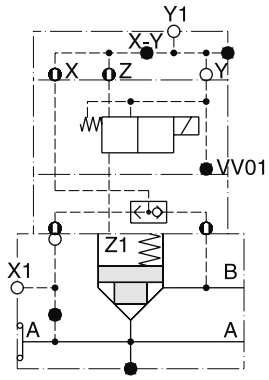

D5S .. -556...CB
CD
Pilot oil: internal from X1 + internal from B
Pilot drain: external out of Y1

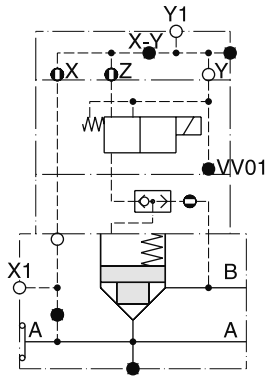

D5S .. -556...DB
DD
Pilot oil: external from X1 + internal from B
Pilot drain: external out of Y1

D5S 2-port position control

Seat entry

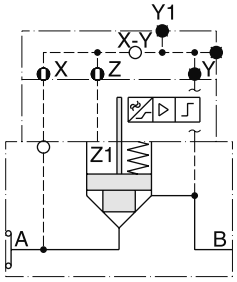

D5S08-7113A.BA
D5S10
Pilot oil: internal from A

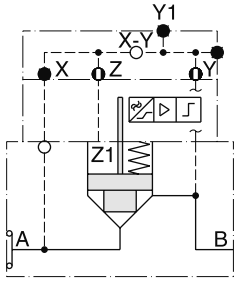

D5S08-7223A.BA
D5S10
Pilot oil: internal from B

Annular entry

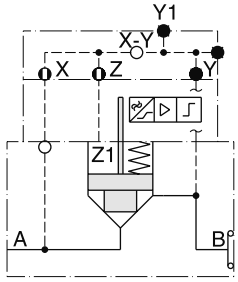

D5S08-8213A.BA
D5S10
Pilot oil: internal from B

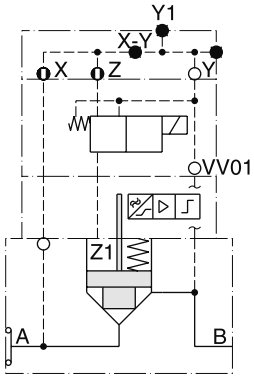

D5S08-7143A.BC
D5S10 BE
Pilot oil: internal from A
Pilot drain: internal to B

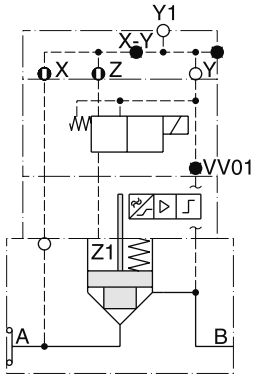

D5S08-7163A.BC
D5S10 BE
Pilot oil: internal from A
Pilot drain: external out of Y1

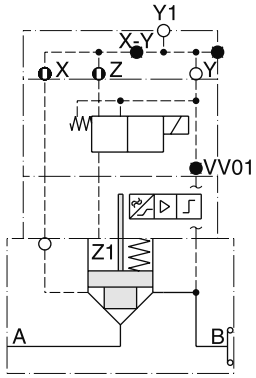

D5S08-8263A.BC
D5S10 BE
Pilot oil: internal from B
Pilot drain: external out of Y1

Seat entry

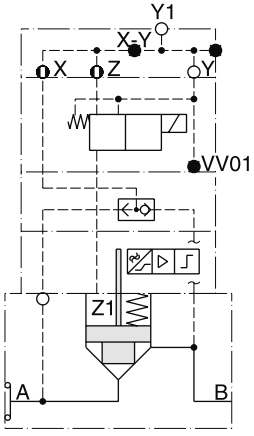

D5S..-736...BH
BK
Pilot oil: internal from A + internal from B
Pilot drain: external out of Y1

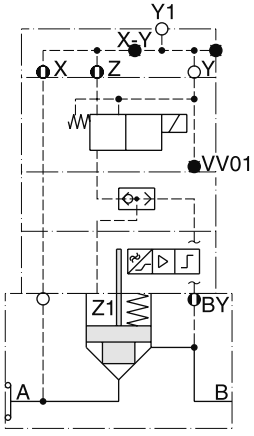

D5S..-736...BN
BQ
Pilot oil: internal from A + internal from B
Pilot drain: external out of Y1

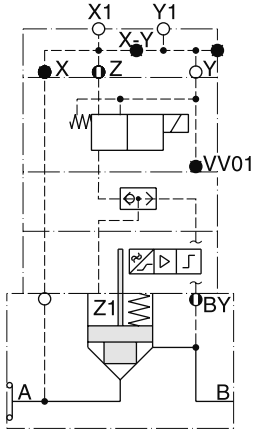

D5S..-757...BN
BQ
Pilot oil: external from X1 + internal from B
Pilot drain: external out of Y1

Annular entry

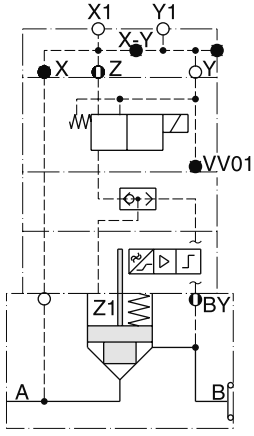

D5S..-857...BN
BQ
Pilot oil: external from X1 + internal from B
Pilot drain: external out of Y1

D5S 3-port position control

Seat entry

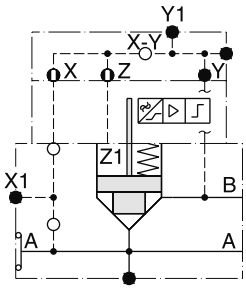

D5S08-5113A.BA
10
12
Pilot oil: internal from A

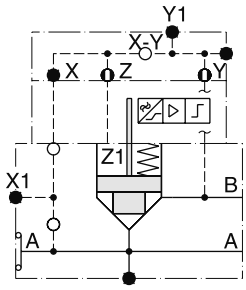

D5S08-5223A.BA
10
12
Pilot oil: internal from B

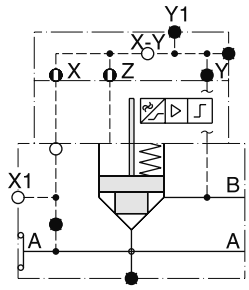

D5S08-5213A.BA
10
12
Pilot oil: external from X1

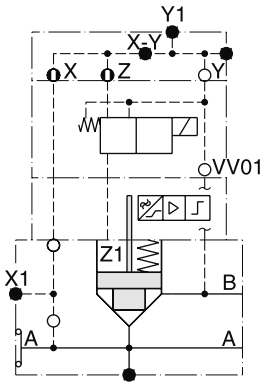

D5S08-5143A.BC
10 BE
12
Pilot oil: internal from A
Pilot drain: internal to B

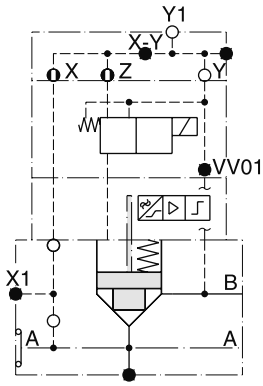

D5S08-5163A.BC
10 BE
12
Pilot oil: internal from A
Pilot drain: external out of Y1

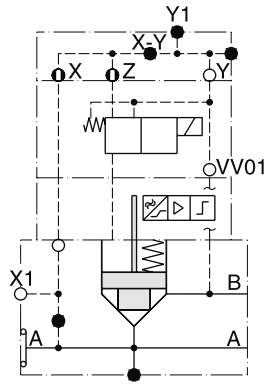

D5S08-5443A.BC
10 BE
12
Pilot oil: external from X1
Pilot drain: internal to B

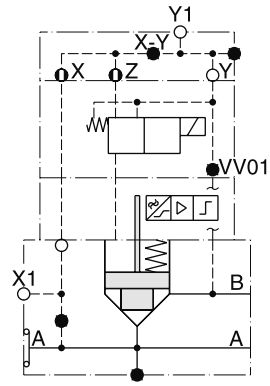

D5S08-5463A.BC
10 BE
12
Pilot oil: external from X1
Pilot drain: external out of Y1

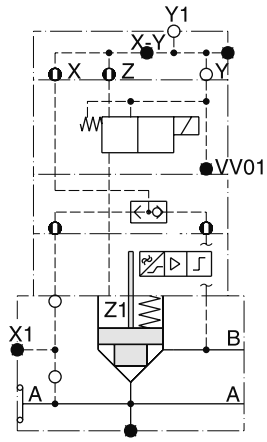

D5S08-5363A.BH
10 BK
12
Pilot oil: internal from A +
internal from B
Pilot drain: external out of Y1

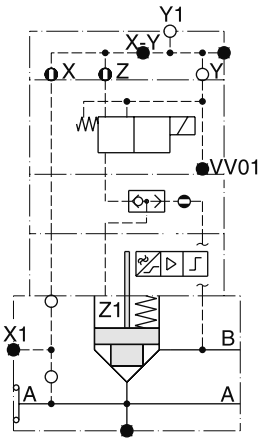

D5S08-5363A.BN
10 BQ
12
Pilot oil: internal from A +
internal from B
Pilot drain: external out of Y1

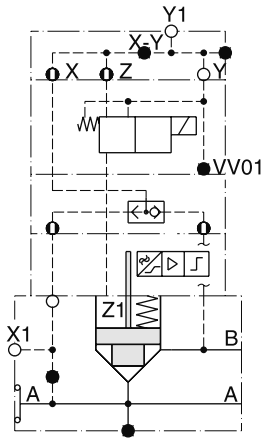

D5S08-5563A.BH
10 BK
12
Pilot oil: external from X1 +
internal from B
Pilot drain: external out of Y1

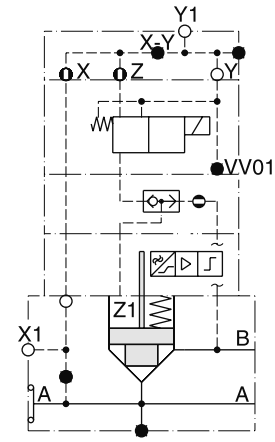

D5S08-5563A.BN
10 BQ
12
Pilot oil: external from X1 +
internal from B
Pilot drain: external out of Y1

Proportional throttle valves series F5C allow to adjust the flow in proportion to the input signal. The combination of the F5C with pressure compensators R5A or R5P serves as a flow control valve - providing load compensated flow.

The F5C is offered with two types of response time:

standard	350 ms at 1 l/min pilot flow
code A	250 ms at 2 l/min pilot flow

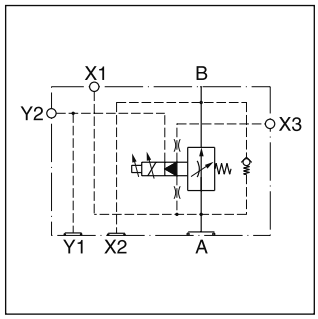

Features

- Spool type proportional throttle valve
- SAE61 flange
- Maximum flow 380 l/min
- 3 sizes, SAE 3/4“, 1“, 1 1/4“
- Load compensated flow in combination with R5A/R5P

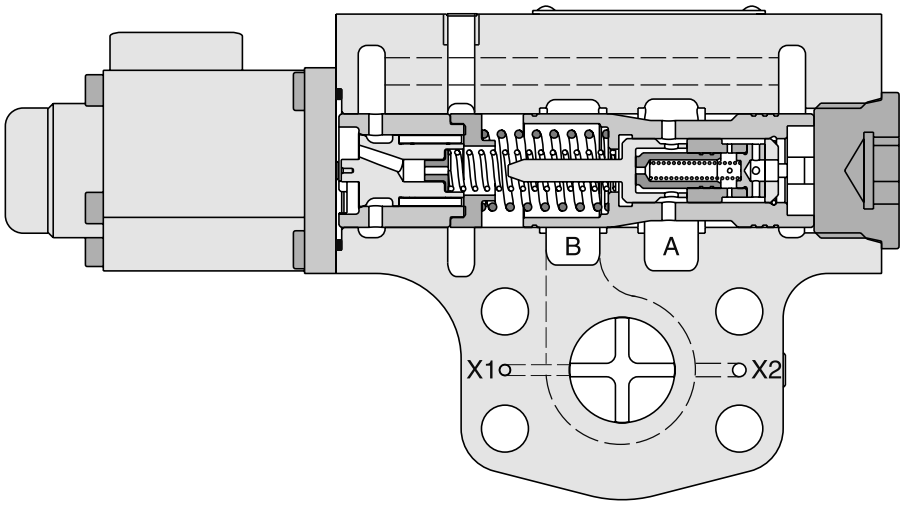

Ordering Code

F5C	☐	☐	4	3	☐	X	☐	0	C	☐	☐	☐
Proportional throttle valve	**Nominal size**	**Pilot flow and response**	**SAE61 interface**	**Pilot ports G¼"**	**Spool type**	**Proportional solenoid 16 V/1.05 A**	**Pilot connection**	**Accessories**	**Design**	**Seals**	**Design series** (not required for ordering)	**Options**

Code	Nominal size
06	SAE ¾"
08	SAE 1"
10	SAE 1¼"

Code	Pilot flow	Max. response
—	1 l/min	350 ms
A	2 l/min	250 ms

Spool type		
Code	Size	Max. flow [1]
A	06	23 l/min
B	06/08	45 l/min
1	06/08/10	95 l/min
2	08/10	190 l/min
3	10	380 l/min

Code	Seals
1	NBR
5	FPM

Code	Pilot connections	F5C without compensators R5A, R5P	F5C for combination with R5A	F5C for combination with R5P
2	internal PD (Y) internal PP (X)	—	—	X1, X3, Y2 ● X2, Y1 ○ X2, Y1 ○
3	external PD (Y) external PP (X)	—	X1, X3, Y2 ○ X2, Y1 ⊗	—
4	external PD (Y) external PP (X)	X3, Y2 ○ X1 ● X2, Y1 ⊗	—	X2, X3, Y1, Y2 ○ X1 ●
5	external PD (Y) internal PP (X)	—	X1, Y2 ○ X3 ● X2, Y1 ⊗	—
6	external PD (Y) internal PP (X)	X1, X3 ● X2, Y1 ⊗ Y2 ○	—	X1, X3 ● X2, Y1, Y2 ○

[1] At nominal pressure drop (Δp = 8.4 bar).

9

Pilot connection explanation

F5C with R5A

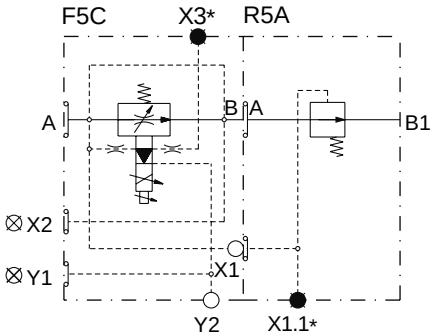

F5C with R5P

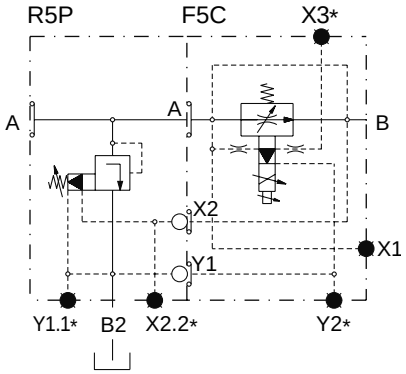

* optional

○ open ● closed ⊗ closed by counterpart

Technical data

General			
Size	**06 (¾")**	**08 (1")**	**10 (1¼")**
Mounting	Flanged according to SAE61		
Mounting position	unrestricted		
Ambient temperature [°C]	-20...+60		
Weight [kg]	3.9	4.1	5.8
Hydraulic			
Max. operating pressure			
Ports A, B, X1, X2, X3 [bar]	350	300	280
Ports Y1, Y2 [bar]	70		
Max. pressure drop (from A to B) [bar]	21		
Nominal flow [l/min]	95	190	380
Fluid	Hydraulic oil according to DIN 51524		
Fluid temperature [°C]	-20...+70 (NBR: -25...+70)		
Viscosity permitted [cSt] / [mm²/s]	20...400		
recommended [cSt] / [mm²/s]	30...80		
Filtration	ISO 4406 (1999); 18/16/13		
Electrical characteristics			
Duty ratio	100 % ED; CAUTION: coil temperature up to 150 °C possible		
Solenoid connection	Connector as per EN175301-803, solenoid identification as per ISO 9461		
Protection class	IP65 in accordance with EN 60529 (with correctly mounted plug-in connector)		
Supply voltage [V]	16		
Current consumption [A]	1.05		
Resistance [Ohm]	11.3		
Response time [ms]	see ordering code		

Characteristic curves

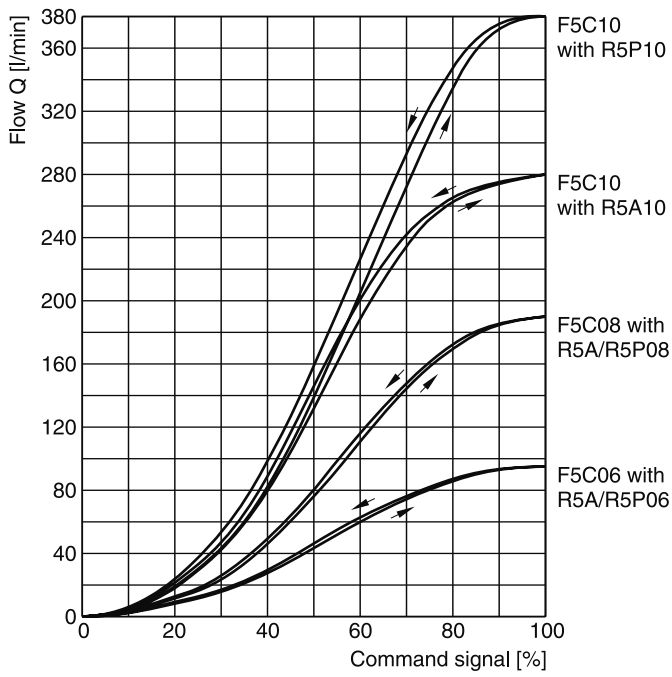

All characteristic curves measured with HLP46 at 50 °C.

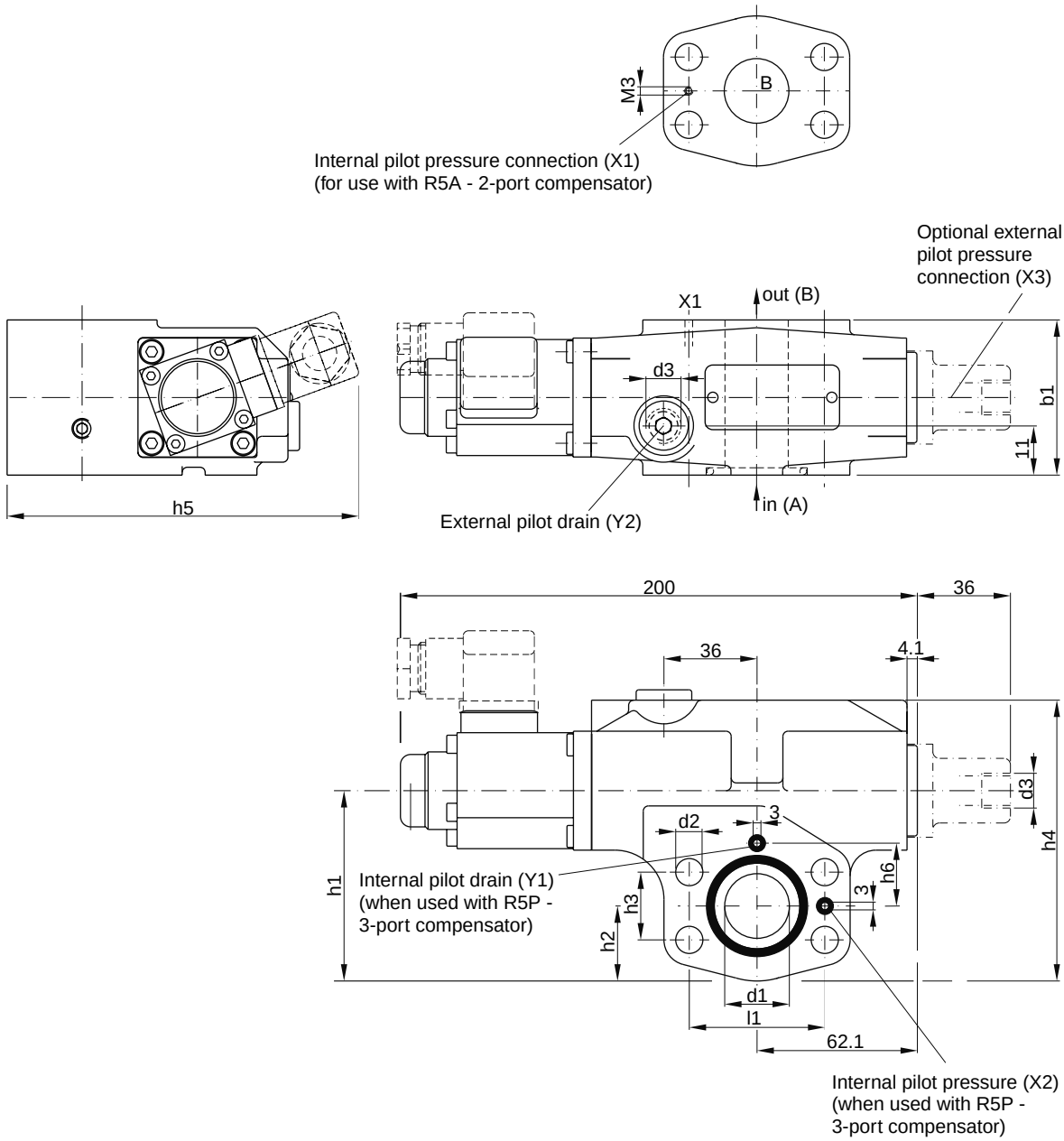

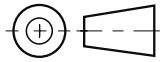

Seal kits		
NG	**NBR**	**FPM**
06 / 08 / 10	S26-58484-0	S26-58484-5

	l1	b1	h1	h2	h3	h4	h5	h6	d1	d2	d3
F5C06	47.6	60	68.2	26	22.2	103.2	183	20.8	19	10.5	G¼"
F5C08	52.4	60	73.6	29	26.2	108.6	187	24.3	25	10.5	G¼"
F5C10	58.7	75	83.5	36.5	30.2	118.5	198	29.3	32	12.5	G¼"

F5C UK.INDD CM 16.04.15

Direct operated 2-way pressure compensators series R5A can be combined with any type of fixed or adjustable flow resistor (throttle) to provide a load compensated flow.

The combination with the proportional throttle valve F5C serves as a compact 2-way flow control unit in SAE flange design. The R5A is typically used as meter-out compensator behind the flow resistor.

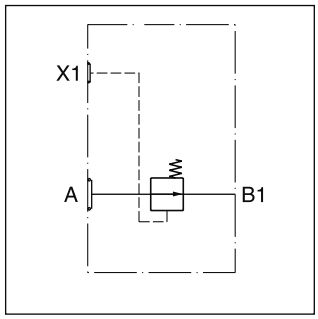

Features

- Seated type 2-way pressure compensator
- SAE61 flange
- 8.4 bar control pressure
- 3 sizes, SAE 3/4“, 1“, 1 1/4“
- Load compensated flow in combination with F5C

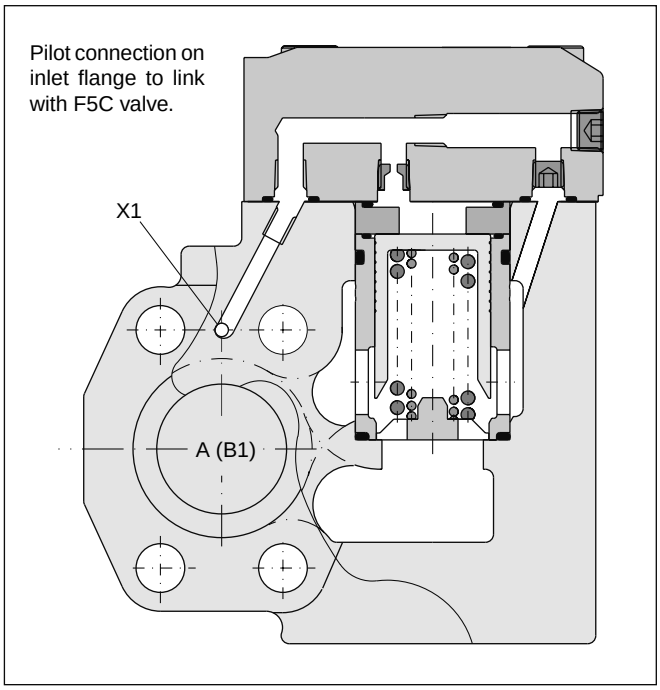

9

Ordering code

R5A		–		4	1	01	B		
2-port compensator	Nominal size		SAE61 interface	2-port body	Plain cap	Pilot connection thru port X1	Design series	Seals	Options

Code	Nominal size
06	SAE ¾"
08	SAE 1"
10	SAE 1¼"

SAE 61 interface		
Code	Size	Max. pressure [bar]
4	10	280
5	06/08	350

Code	Seals
1	NBR
5	FPM

R5A UK.INDD CM 16.04.15

Technical data

General			
Size	**06 (¾")**	**08 (1")**	**10 (1¼")**
Mounting	Flanged according to SAE61		
Mounting position	unrestricted		
Ambient temperature [°C]	-20...+60		
$MTTF_D$ value [years]	150		
Weight [kg]	3.6	4.3	5.6
Hydraulic			
Max. operating pressure Ports A, B, X1 [bar]	350	350	280
Control pressure [bar]	8.4		
Nominal flow [l/min]	90	300	600
Fluid	Hydraulic oil according to DIN 51524		
Fluid temperature [°C]	-20...+70 (NBR: -25...+70)		
Viscosity, permitted [cSt] / [mm^2/s]	20...400		
recommended [cSt] / [mm^2/s]	30...80		
Filtration	ISO 4406 (1999); 18/16/13		

Dimensions

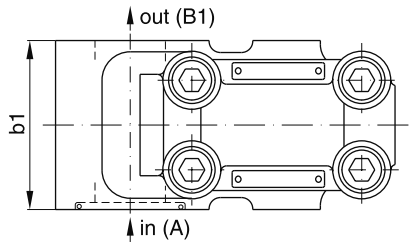

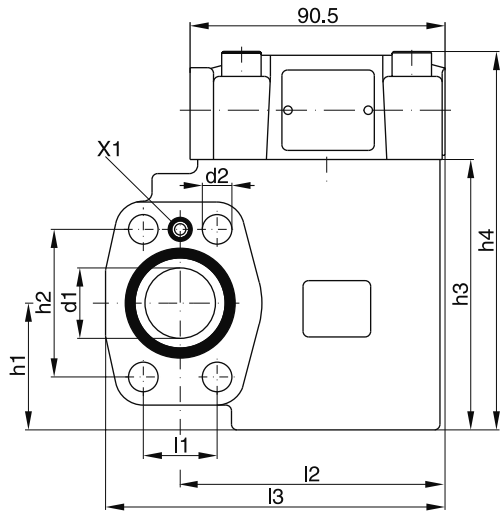

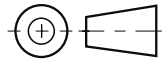

Seal kits		
NG	**NBR**	**FPM**
06	S16-91458-0	S16-91458-5
08	S16-91457-0	S16-91457-5
10	S16-91456-0	S16-91456-5

	l1	l2	l3	b1	h1	h2	h3	h4	d1	d2
R5A06	22.2	77	101	60	37	47.6	90	128	19	10.5
R5A08	26.2	94	120.5	60	45	52.4	96	134	25	10.5
R5A10	30.2	94	128	75	48	58.7	109	147	32	12.5

R5A UK.INDD CM 16.04.15

Direct operated 3-way pressure compensators series R5P can be combined with any type of fixed or adjustable flow resistor (throttle) to provide a load compensated flow.

The combination with the proportional throttle valve F5C serves as a compact 3-way flow control unit in SAE flange design. The R5P is typically used as meter-in compensator in front of the flow resistor.

The R5P is additionally equipped with a pressure relief pilot, that controls the compensator cartridge and operates as system pressure relief valve. The R5P*P2 provides a proportional relief function.

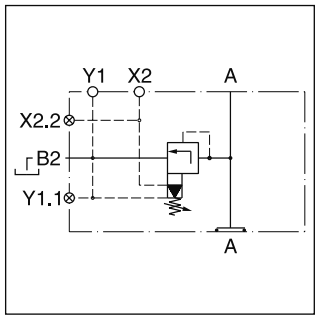

Features

- Seated type 3-way pressure compensator
- SAE61 flange
- 8.4 bar control pressure
- Pressure relief function (optionally proportional)
- With optional vent function
- 3 sizes, SAE 3/4“, 1“, 1 1/4“
- Load compensated flow in combination with F5C

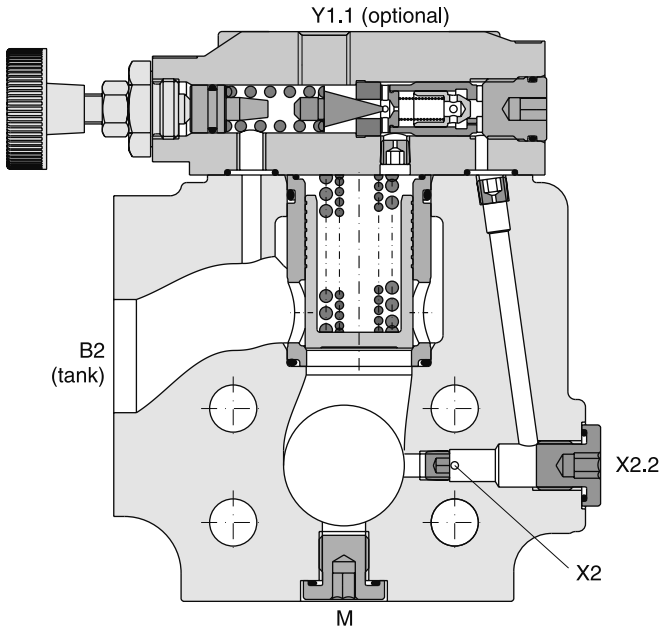

R5P

R5P	☐	–	☐	☐	☐	☐	☐	☐	☐	A	☐	☐
3-port compensator	Nominal size		SAE 61 Interface	Pilot ports	Pressure stages	Adjust-ment	Pilot connection	Switching type	Solenoid voltage	Design series	Seals	Options

Code	Port size
06	SAE ¾"
08	SAE 1"
10	SAE 1¼"

SAE61 interface		
Code	Size	Max. pressure [bar]
4	10	280
5	06/08	350

Code	Pilot ports	Port Y1 [1]
9	G¼"	plugged
P		open

Code	Pressure stages
1	7...105 bar
3	7...210 bar
5 [2]	7...350 bar

Code	Adjustment
1	Hand knob
3	Acorn nut with lead seal

Code	Seals [6]
1	NBR
5	FPM

Code	Solenoid voltage
omit	Standard w/o vent function
G0R	12 V=
G0Q	24 V=
GAR [5]	98 V=
GAG [5]	205 V=
W30	110 V / 50 Hz 120 V / 60 Hz
W31	230 V / 50 Hz 240 V / 60 Hz

Code	Switching type
omit	Standard w/o vent function
09	Solenoid not activated unpressure circulation
11	Solenoid activated unpressure circulation

Code	Pilot connection
2	internal PD internal PP [4]
6	external PD [3] internal PP [4]

9

[1] Y1 port is used in combination with F5C, when the F5C should be drained through the R5P (internal or external drain).
[2] R5P10-4*5 up to 280 bar.
[3] Through port Y1.1.
[4] PP through port X1 in outlet flange.
[5] To be used in combination with rectifier plugs at 120 VAC/230 VAC power supply.
[6] Further seals on request.

R5P*P2

R5P	☐	–	☐	☐	☐	☐	☐	P2	G0R	A	☐	☐
3-port compensator	Nominal size		SAE 61 Interface	Pilot ports	Pressure stages	Adjust-ment	Pilot connection	Propor-tional pressure control	Solenoid voltage 12 V 2.1 A	Design series	Seals	Options

Code	Port size
06	SAE ¾"
08	SAE 1"
10	SAE 1¼"

SAE61 interface		
Code	Size	Max. pressure [bar]
4	10	280
5	06/08	350

Code	Pilot ports	Port Y1 [1]
9	G¼"	plugged
P		open

Code	Pressure stages
1	7...105 bar
3	7...210 bar
5 [2]	7...350 bar

Code	Seals [5]
1	NBR
5	FPM

Code	Pilot connection
2	internal PD internal PP [4]
6	external PD [3] internal PP [4]

Code	Adjustment
1	Hand knob
3	Acorn nut with lead seal

9

[1] Y1 port is used in combination with F5C, when the F5C should be drained through the R5P (internal or external drain).
[2] R5P10-4*5 up to 280 bar.
[3] Through port Y1.1.
[4] PP through port X1 in outlet flange.
[5] Further seals on request.

R5P

General							
Size			**06 (¾")**	**08 (1")**	**10 (1¼")**		
Mounting			Flanged according to SAE61				
Mounting position			unrestricted				
Ambient temperature		[°C]	-20...+60				
$MTTF_D$ value		[years]	150				
Weight	R5P	[kg]	3.7	4.4	5.3		
	R5P with VV01	[kg]	5.4	6.1	7.0		
Hydraulic							
Max. operating pressure	Ports A, B	[bar]	350	350	280		
Pressure stages		[bar]	105, 210, 350				
Nominal flow		[l/min]	90	300	600		
Fluid			Hydraulic oil according to DIN 51524				
Fluid temperature		[°C]	-20...+70 (NBR: -25...+70)				
Viscosity	permitted	[cSt] / [mm^2/s]	20...400				
	recommended	[cSt] / [mm^2/s]	30...80				
Filtration			ISO 4406 (1999); 18/16/13				
Electrical (solenoid) R5P with VV01							
Duty ratio			100 % ED; CAUTION: coil temperature up to 150 °C possible				
Protection class			IP65 in accordance with EN 60529 (with correctly mounted plug-in connector)				
		Code	G0R	G0Q	GAR	GAG	W30	W31
Supply voltage		[V]	12 V =	24 V =	98 V =	205 V =	110 at 50 Hz 120 at 60 Hz	230 at 50 Hz 240 at 60 Hz
Tolerance supply voltage		[%]	±10	±10	±10	±10	±5	±5
Current consumption	hold	[A]	2.72	1.29	0.33	0.13	0.6 / 0.55	0.3 / 0.27
	in rush	[A]	2.72	1.29	0.33	0.13	2.5 / 2.4	1.25 / 1.2
Power consumption	hold	[W]	32.7	31	31.9	28.2	70 / 70 VA	70 / 70 VA
	in rush	[W]	32.7	31	31.9	28.2	280 / 290 VA	280 / 290 VA
Solenoid connection			Connector as per EN175301-803, solenoid identification as per ISO 9461					
Wiring min.		[mm^2]	3 x 1.5 recommended					
Wiring length max.		[m]	50 recommended					

R5P*P2

9

General					
Size			**06 (¾")**	**08 (1")**	**10 (1¼")**
Mounting			Flanged according to SAE61		
Mounting position			unrestricted		
Ambient temperature		[°C]	-20...+60		
$MTTF_D$ value		[years]	75		
Weight		[kg]	5.5	6.2	7.1
Hydraulic					
Max. operating pressure	Ports A, B	[bar]	350	350	280
Pressure stages		[bar]	105, 210, 350		
Nominal flow		[l/min]	90	300	600
Fluid			Hydraulic oil according to DIN 51524		
Fluid temperature		[°C]	-20...+70 (NBR: -25...+70)		
Viscosity	permitted	[cSt] / [mm^2/s]	20...400		
	recommended	[cSt] / [mm^2/s]	30...80		
Filtration			ISO 4406 (1999); 18/16/13		
Electrical (proportional solenoid)					
Duty ratio			100 % ED; CAUTION: coil temperature up to 150 °C possible		
Protection class			IP65 in accordance with EN 60529 (with correctly mounted plug-in connector)		
Code			G0R		
Supply voltage		[V]	12 V =		
Max. current		[A]	2.1		
Coil resistance at 20 °C		[Ohm]	4.28		
Solenoid connection			Connector as per EN 175301-803		
Power amplifier, recommended			PCD00A-400		

R5P UK.INDD CM 16.04.15

R5P

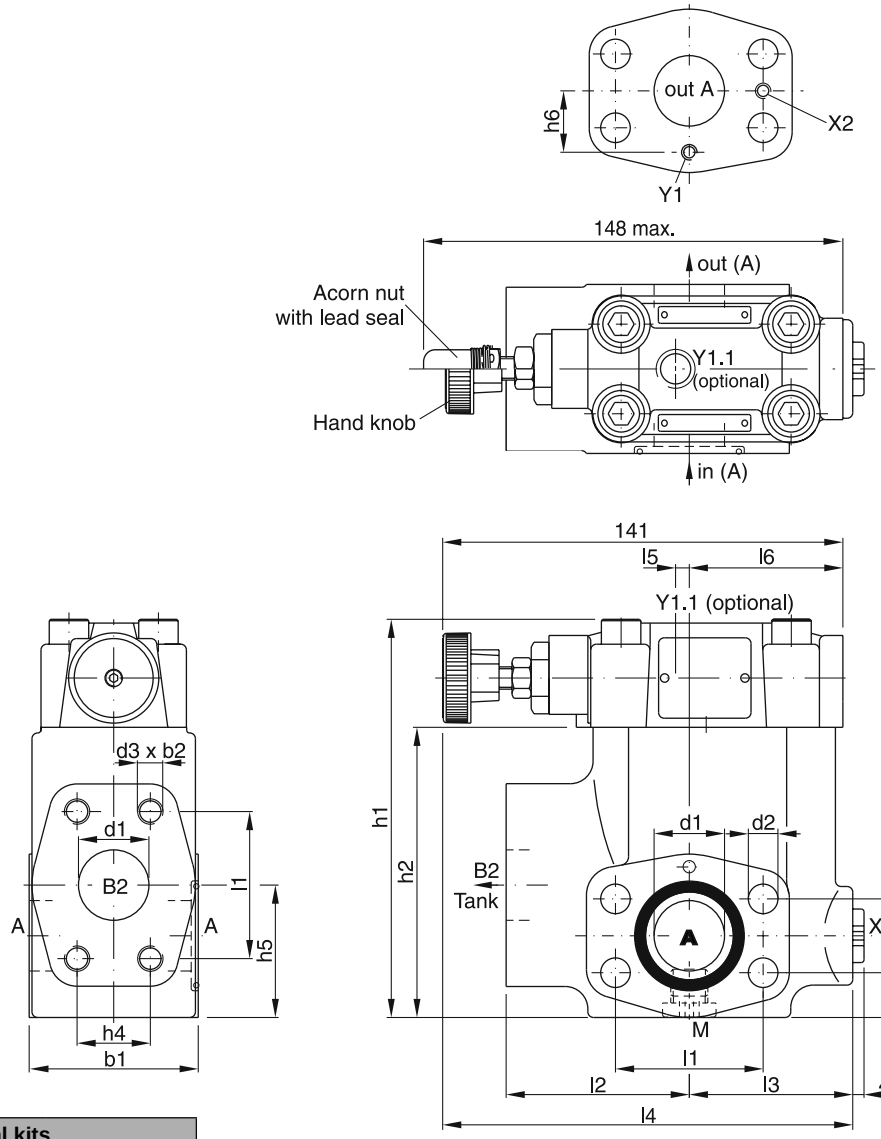

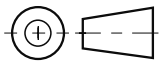

Seal kits		
NG	NBR	FPM
06	S16-91461-0	S16-91461-5
08	S16-91460-0	S16-91460-5
10	S16-91459-0	S16-91459-5

	l1	l2	l3	l4	l5	l6	b1	b2	h1	h2	h3	h4	h5	h6	d1	d2	d3
R5P06	47.6	63	56	148	1	49	60	20	119	81.6	29.5	22.2	41.6	20.8	19	10.5	3/8" UNC
R5P08	52.4	65	58	144.6	5	54.5	60	23	142	103	30.5	26.2	48.6	24.3	25	10.5	3/8" UNC
R5P10	58.7	61	64	146.6	3	56.5	75	22	149	113	37.5	30.2	64.1	29.3	32	12.5	7/16" UNC

Ports

Port	Function	Port size		
		R5P06	R5P08	R5P10
A	Inlet/outlet	¾"	1"	1¼"
B2	Tank	¾"	1"	1¼"
X2	Internal pilot pressure	M3	M3	M3
X2.2	External pilot pressure	G¼"	G¼"	G¼"
Y1	Internal pilot drain	M3	M3	M3
Y1.1	External pilot drain	G¼"	G¼"	G¼"
M	Pressure gauge	G¼"	G¼"	G¼"

R5P UK.INDD CM 16.04.15

R5P*P2

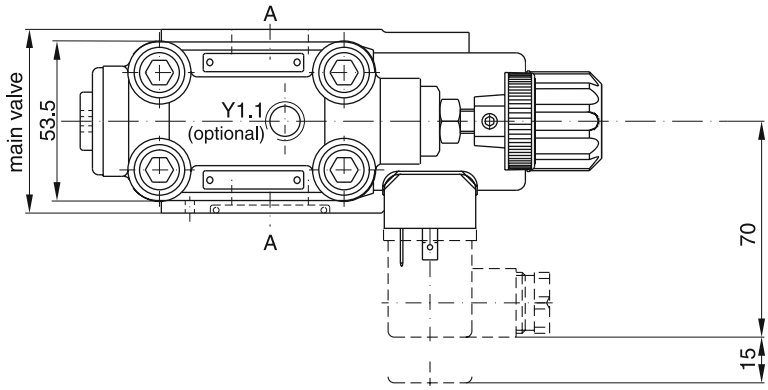

Drain line only external from the pilot head (Y1.1).

The pilot drain port must be connected to a stable low pressure tank line. Pressure variations in the drain port should be avoided.

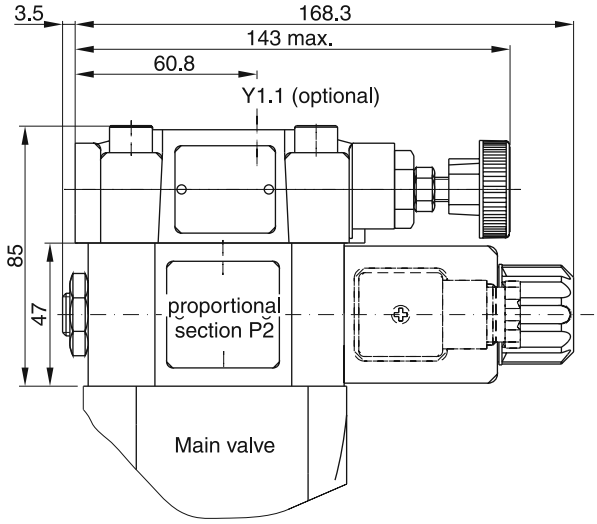

Note:

On initial start up and after long shut down periods bleed air from this plug.

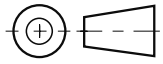

9

	Kit	
	NBR	FPM
Prop. section P2	S26-58473-0	S26-58473-5

R5P with vent function

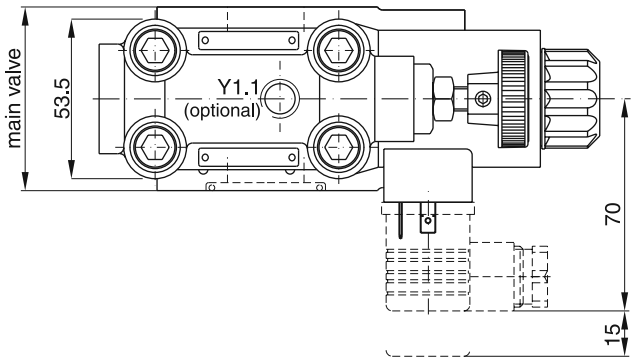

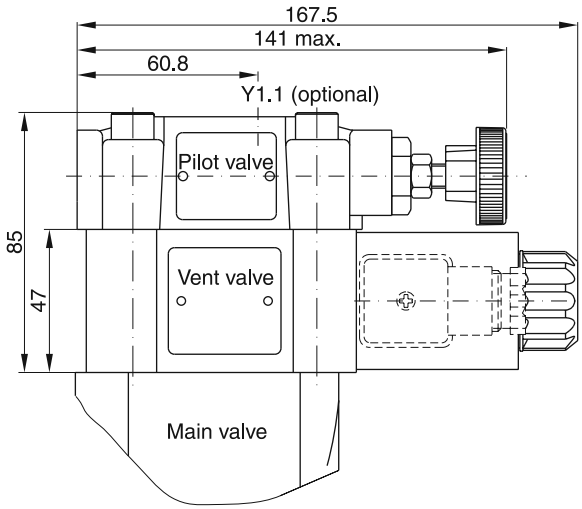

Seal kits	
NBR	**FPM**
DC solenoid	
S56-40609-0	S56-40609-5
AC solenoid	
S26-35237-0	S26-35237-5

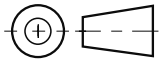

9

Code	Internal drain	External drain
11	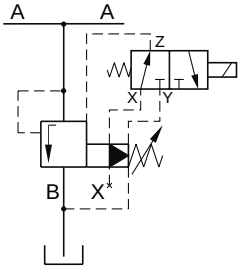	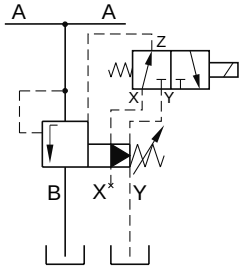
09	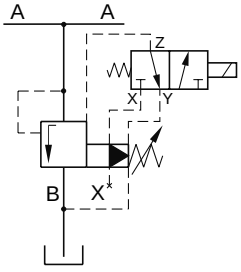	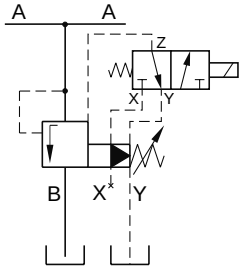

Direct operated check valves series C5V provide free flow in one direction and block the flow in the counter direction.

The SAE flanges allow to mount the C5V directly on the pressure port of pumps for protection against pressure shocks from the system.

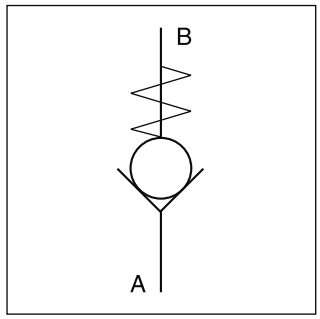

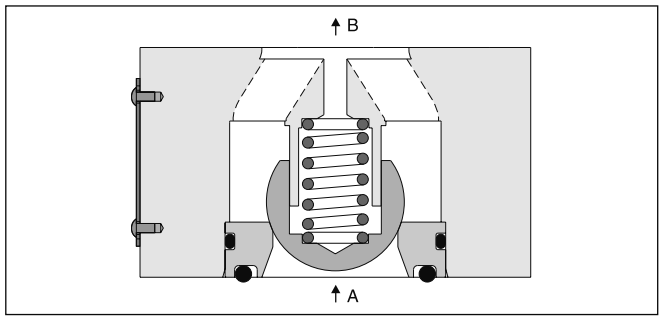

Features

- Direct operated check valve
- SAE61 and SAE62 flange
- 4 sizes (SAE ¾", 1", 1¼", 1½")
- 3 springs
- 5 options for body sealing

Ordering Code

C5V	☐	–	☐	☐	☐	B	☐	☐
Direct operated check valve	Nominal size		Flange	Body sealing	Cracking pressure	Design series	Seals	Options

Code	Port size
06	SAE ¾"
08	SAE 1"
10	SAE 1¼"
12	SAE 1½"

Code	Flange
3	SAE61
6	SAE62

Code	Body sealing
1	Sealing for port A
2	Sealing for port A and X
3	Without sealing
4	Sealing for port B
5	Sealing for port A and B

Code	Cracking pressure
0	0.5 bar
1	1.0 bar
2	2.0 bar

Code	Seals
1	NBR
5	FPM

Code	Options
omit	Standard
019 [1]	M14 mounting screws

[1] Only for C5V10-6 (SAE62)

General						
Size			**06 (¾")**	**08 (1")**	**10 (1¼")**	**12 (1½")**
Mounting			2-port inline flange (SAE61 and 62)			
Mounting position			unrestricted			
Ambient temperature		[°C]	-20...+60			
$MTTF_D$ value		[years]	150			
Weight		[kg]	0.6	0.9	1.3	1.8
Hydraulic						
Max. operating pressure	SAE61	[bar]	350	350	280	210
	SAE62	[bar]	420	420	420	420
Nominal flow		[l/min]	100	200	400	750
Fluid			Hydraulic oil according to DIN 51524			
Fluid temperature		[°C]	-20...+70 (NBR: -25...+70)			
Viscosity	permitted	[cSt] / [mm^2/s]	20...400			
	recommended	[cSt] / [mm^2/s]	30...80			
Filtration			ISO 4406 (1999); 18/16/13			

9

C5V06

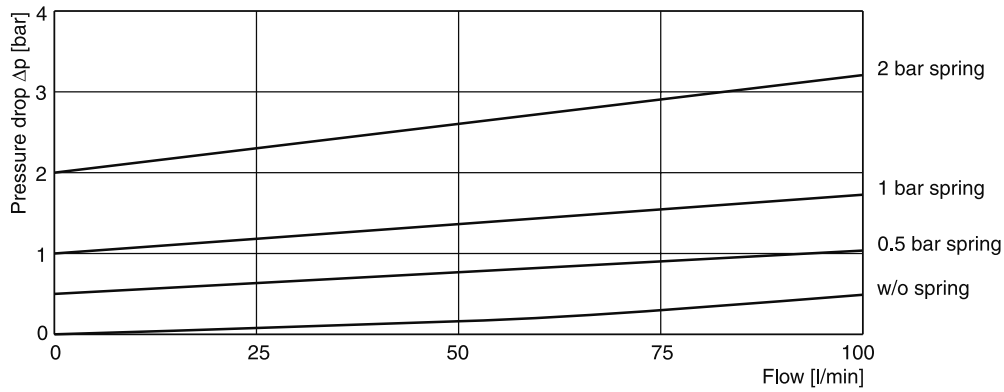

C5V08

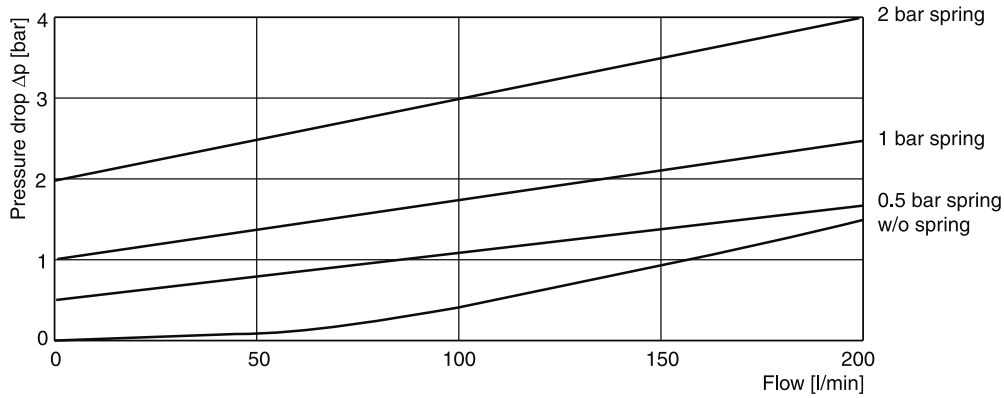

C5V10

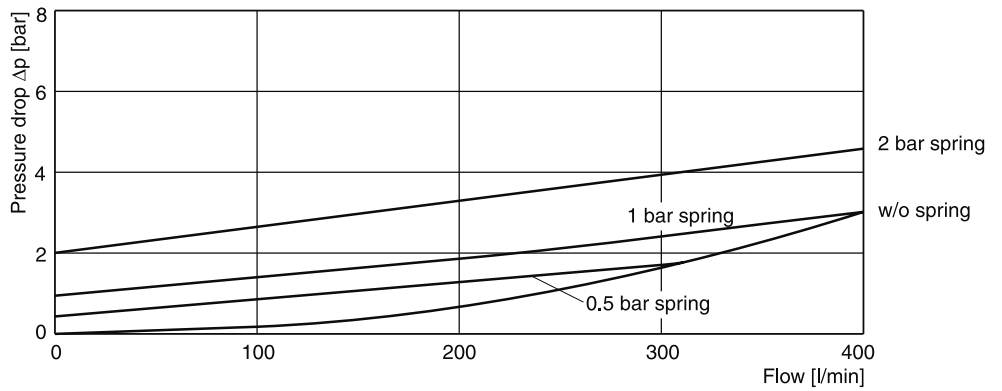

C5V12

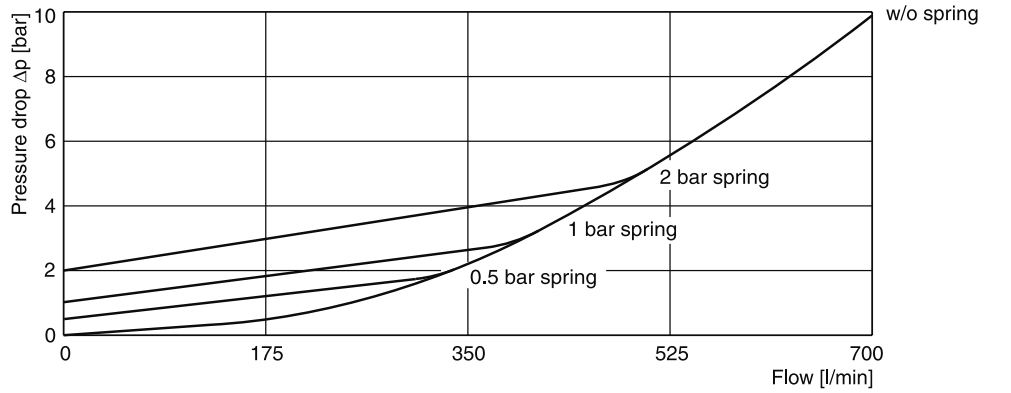

All characteristic curves measured with HLP46 at 50 °C.

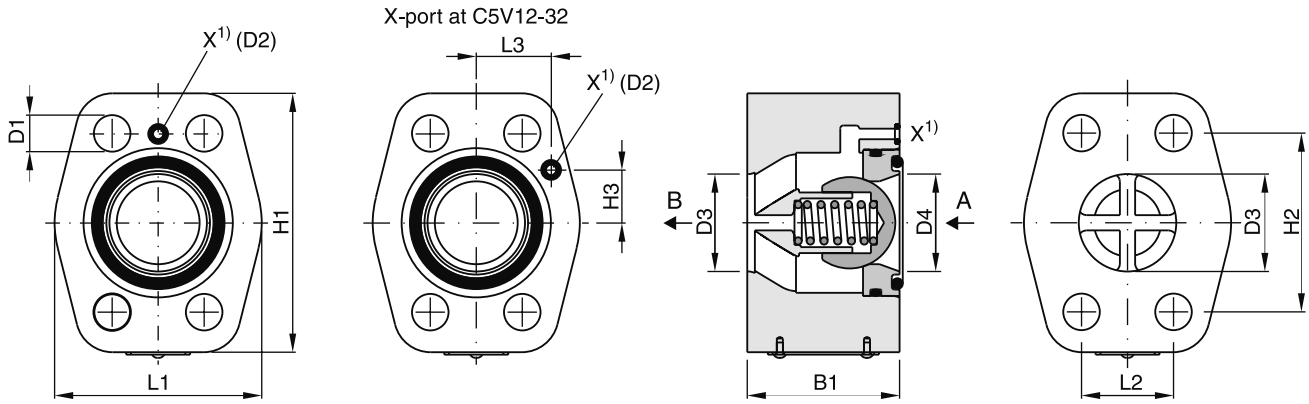

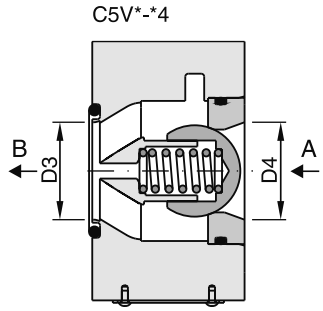

Position of O-ring seal according to ordering code.

Seal kits		
NG	**NBR**	**FPM**
06	S26-75409-0	S26-75409-5
08	S26-75410-0	S26-75410-5
10	S26-75411-0	S26-75411-5
12	S26-75412-0	S26-75412-5

Series	Nominal Size		L1	L2	L3	H1	H2	H3	B1	D1	D2	D3 + 0.8	D4
C5V06	3/4“	SAE61	48	22.2	–	64	47.6	–	45	10.5	Ø3	19	19
		SAE62	48	23.8	–	64	50.8	–	45	10.5	–	19	19
C5V08	1“	SAE61	60	26.2	–	74	52.4	–	45	10.5	Ø3	25	25
		SAE62	60	27.8	–	74	57.2	–	45	12.5	–	25	25
C5V10	1 1/4“	SAE61	68	30.2	–	85	58.7	–	50	12.5	Ø3	32	32
		SAE62	68	31.8	–	85	66.7	–	50	13.5 [2]	–	32	32
C5V12	1 1/2“	SAE61	80	35.7	27.2	104	69.8	22.4	50	13.5	Ø3	42	38
		SAE62	80	36.5	27.2	104	79.4	22.4	50	17	–	42	38

[1] X1 port for C5V*32* (for use with unloading valve R5U).
[2] D1 = 15 at option code 019 for M14 mounting screws.

Pilot operated check valves series C5P have a similar design to the subplate mounted C4V series. The SAE flanges allow to mount directly on the flanges of actuators to achieve a very compact design.

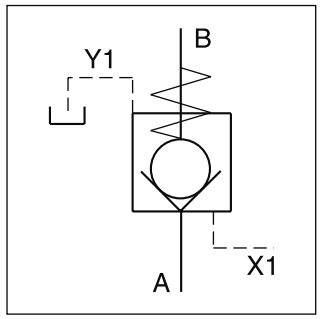

Features

- Pilot operated check valve
- 2-port body with SAE61 flange
- 3 sizes (SAE ¾", 1", 1¼")
- 4 opening ratios
- Optional with position control

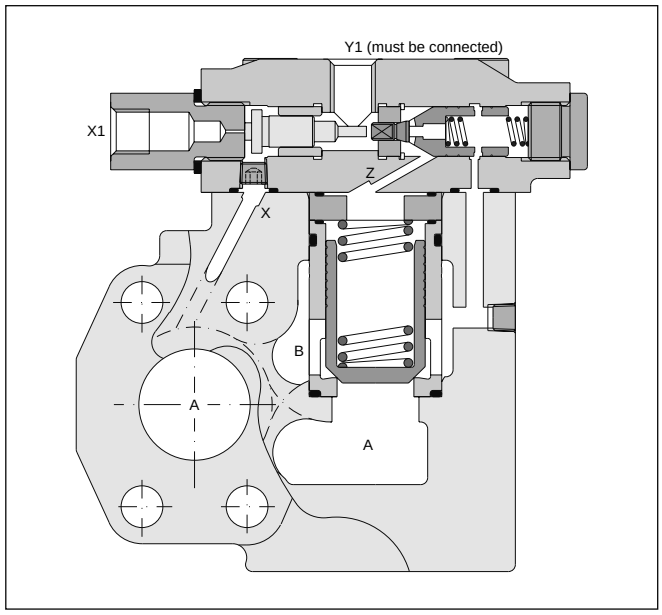

Ordering code

C5P	☐	–	☐	8	☐	☐	A	☐	☐
Pilot operated check valve	Nominal size		SAE61 interface	Pilot ports X1 and Y1=G¼"	Opening ratio	Cracking pressure	Design series	Seals	Options

Code	Nominal size
06	¾"
08	1"
10	1¼"

SAE61		
Code	Max. pressure	Size
4	280 bar	10 (SAE61)
5	350 bar	06/08 (SAE61)

Code	Opening ratio
1	1 : 1
3	3 : 1
8	8 : 1
9	10 : 1

Code	Opening ratio [1]
E	1 : 1
F	3 : 1
G	8 : 1
H	10 : 1

Code	Size	Flow A → B	Flow B → A
2	06	1.0 bar	1.5 bar
	08/10	1.0 bar	1.7 bar
4	06	4.0 bar	5.5 bar
	08/10	3.5 bar	6.0 bar
6	06	2.0 bar	3.0 bar
	08/10	2.2 bar	3.8 bar

Code	Seals
1	NBR
5	FPM

Code	Options
omit	Standard
013	Position control with protection

[1] Position control incl. amplifier for C5P08/10 only.

C5P UK.INDD CM 09.04.15

General				
Size		**06 (¾")**	**08 (1")**	**10 (1¼")**
Mounting		2-port inline flange (SAE61)		
Mounting position		unrestricted		
Ambient temperature	[°C]	-20...+60		
$MTTF_D$ value	[years]	150		
Weight	[kg]	3.9	4.4	5.7
Hydraulic				
Max. operating pressure Ports A, B	[bar]	350	350	280
Port Y1	[bar]	30	30	30
Nominal flow	[l/min]	180	360	600
Fluid		Hydraulic oil according to DIN 51524		
Fluid temperature	[°C]	-20...+70 (NBR: -25...+70)		
Viscosity, permitted	[cSt] / [mm^2/s]	20...400		
recommended	[cSt] / [mm^2/s]	30...80		
Filtration		ISO 4406 (1999); 18/16/13		

Position Control

Position control by proximity switch with amplifier. The closed position is monitored.

Valve open: proximity switch activated.

This proximity switch is pressure proof and has no wearing parts.

Note: Position control for C5P08 and C5P10 only.

Technical data proximity switch

Function		PNP, contact
Supply voltage (Us)	[VDC]	10...30
Supply voltage ripple	[%]	≤ 10
Current consumption	[mA]	max. 8
Residual voltage L-signal	[V]	Us - 2.2 at Imax
Output current (I)	[mA]	≤ 200
Protection class		IP67
Ambient temperature	[C°]	-25...+70
Wire cross section	[mm2]	3 x 0.5

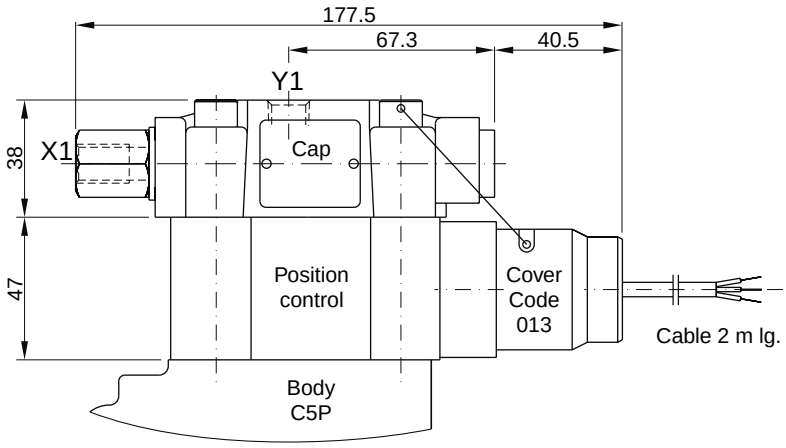

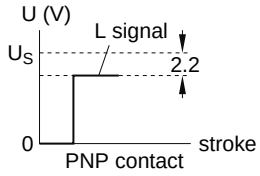

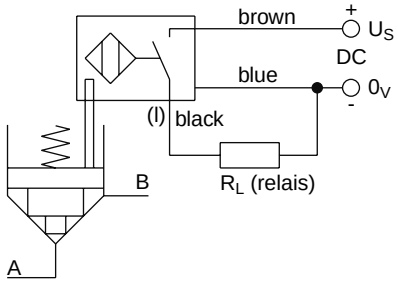

9

p/Q-performance curves

C5P06

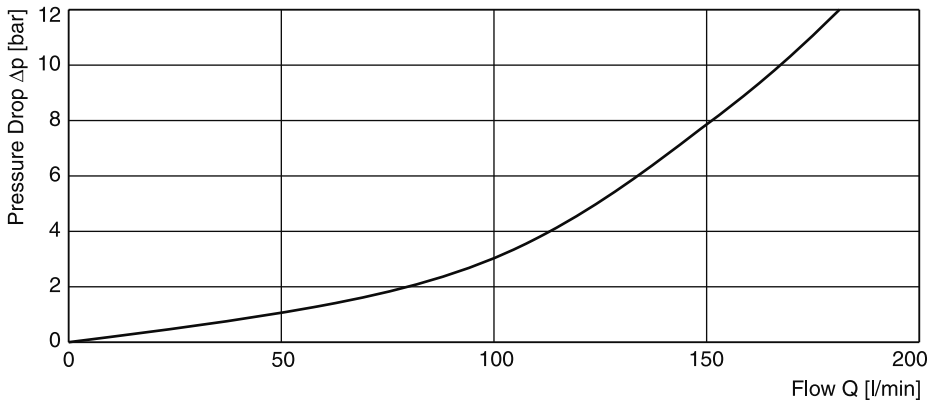

C5P08

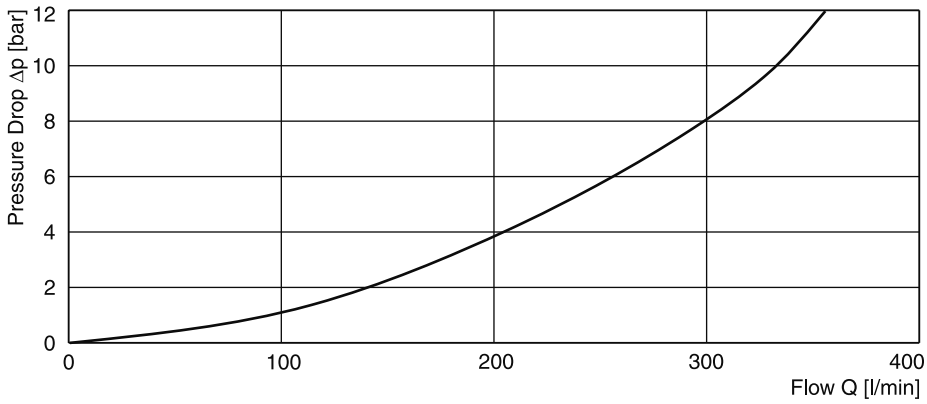

C5P10

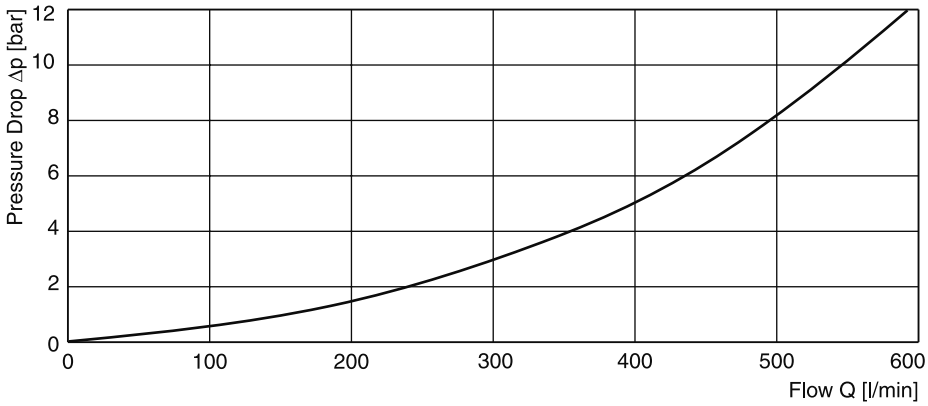

All characteristic curves measured with HLP46 at 50 °C.

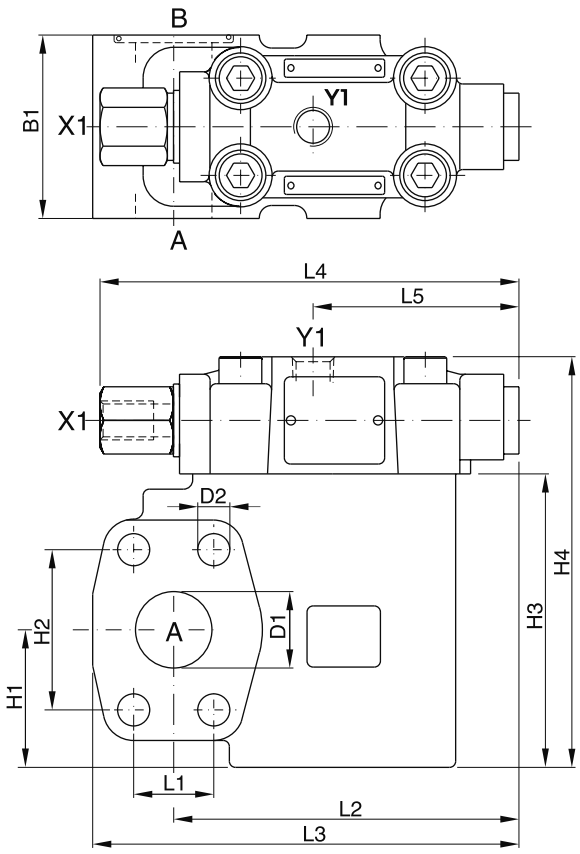

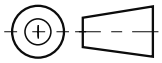

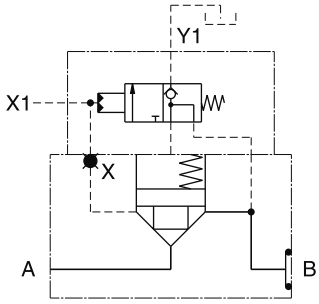

Seal kits		
NG	NBR	FPM
06	S26-59404-0	S26-59404-5
08	S26-59405-0	S26-59405-5
10	S26-59406-0	S26-59406-5

9

Dimensions

Type	L1	L2	L3	L4	L5	B1	H1	H2	H3	H4	D1	D2
C5P06	22.2	95.8	119.8	137	67.3	60	37	47.6	90	128	19	10.5
C5P08	26.2	112.9	139.4	137	67.3	60	45	52.4	96	134	25	10.5
C5P10	30.2	112.9	146.9	137	67.3	75	48	58.7	109	147	32	12.5

Ports

Port	Function	Port size		
		C5P06	C5P08	C5P10
A	Inlet or outlet	¾" SAE61	1" SAE61	1¼" SAE61
B	Outlet or inlet	¾" SAE61	1" SAE61	1¼" SAE61
X1	External pilot port	G¼"	G¼"	G¼"
Y1	External pilot drain	G¼"	G¼"	G¼"

BK bolt kits for SAE61 valves

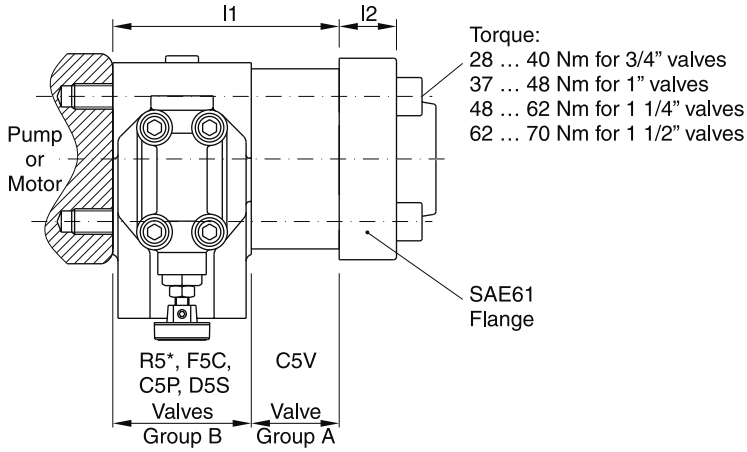

Port	Qty. of valves and group for each stack	l1	l2	UNC screws (12.9)	
				Dimension	Ordering code
¾" SAE61	1 x A	45	16...22	3/8"-16 x 3¼"	BK-358-16330-0
	1 x B	60		3/8"-16 x 3¾"	BK-358-16350-0
	(1 x A) + (1 x B)	105		3/8"-16 x 5½"	BK-358-16420-0
	2 x B	120		3/8"-16 x 6"	BK-358-16440-0
1" SAE61	1 x A	45	18...24	3/8"-16 x 3¼"	BK-358-16330-0
	1 x B	60		3/8"-16 x 3¾"	BK-358-16350-0
	(1 x A) + (1 x B)	105		3/8"-16 x 5¾"	BK-358-16430-0
	2 x B	120		3/8"-16 x 6¼"	BK-358-16450-0
1¼" SAE61	1 x A	50	21...25	7/16"-14 x 3½"	BK-358-18340-0
	1 x B	75		7/16"-14 x 4½"	BK-358-18380-0
	(1 x A) + (1 x B)	125		7/16"-14 x 6½"	BK-358-18460-0
	2 x B	150		7/16"-14 x 7½"	BK-358-18500-0
1½" SAE61	1 x A	50	25...27	1/2"-13 x 3¾"	BK-358-20350-0
	1 x B	80		1/2"-13 x 5"	BK-358-20400-0
	(1 x A) + (1 x B)	130		1/2"-13 x 6¾"	BK-358-20470-0
	2 x B	160		1/2"-13 x 8"	BK-358-20520-0

1 bolt kit contains 4 screws.

BK bolt kits for SAE62 valves

Series	Nominal size	l1	l2	UNC screws (12.9)	
				Dimension	Ordering code
C5V06	¾"	45	21	3/8"-16 x 3¼"	BK-358-16330-0
C5V08	1"	45	25	7/16"-14 x 3½"	BK-358-18340-0
C5V10	1¼"	50	27	1/2"-13 x 3¾"	BK-358-20350-0
R5V06-6	¾"	60	21	3/8"-16 x 3¾"	BK-358-16350-0
R5V08-6	1"	60	25	7/16"-14 x 3¾"	BK-358-18350-0
R5V10-6	1¼"	75	27	1/2"-13 x 4½"	BK-358-20380-0
R5V12-6	1½"	80	30	5/8"-11 x 5¼"	BK-358-24410-0

Inlet flange

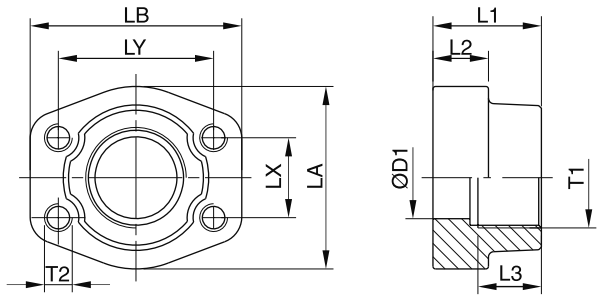

Port size	Order no. [1]	Inlet flange								
		D1	L1	L2	L3	LA	LB	LX	LY	T2
SAE61										
G¾”	PCFF33GSU	19	36	18	19	49	66	22.3	47.6	3/8” UNC
G1”	PCFF34GSU	25	38	18	19	53	71	26.2	52.4	3/8” UNC
G1¼”	PCFF35GSU	31	41	21	22	69	80	30.2	58.7	7/16” UNC
G1½”	PCFF36GSU	38	44	25	24	77	94	35.7	69.9	1/2” UNC
SAE62										
G¾”	PCFF63GSU	19	36	19	22	53	71	23.8	50.8	3/8” UNC
G1”	PCFF64GSU	25	44	24	24	69	80	27.8	57.2	7/16” UNC
G1¼”	PCFF65GSU	31	44	27	25	77	94	31.8	66.6	1/2” UNC
G1½”	PCFF66GSU	38	51	30	28	89	106	36.5	79.3	5/8” UNC

Outlet and tank port flange

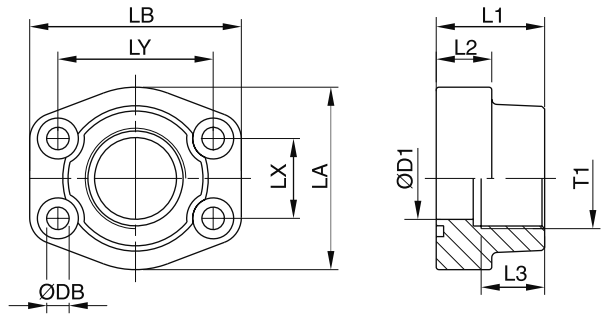

Port size	Order no. [2]	Outlet and tank port flange									Srews
		D1	L1	L2	L3	LA	LB	LX	LY	DB	
SAE61											
G¾”	PFF33GSU	19	36	18	18	49	66	22.3	47.6	10.5	3/8” x 1 1/2 UNC
G1”	PFF34GSU	25	38	18	20	53	71	26.2	52.4	10.5	3/8” x 1 1/2 UNC
G1¼”	PFF35GSU	31	41	21	22	69	80	30.2	58.7	11.5	7/16” x 1 1/2 UNC
G1½”	PFF36GSU	38	44	25	24	77	94	35.7	69.9	13.5	1/2” x 1 3/4 UNC
SAE62											
G¾”	PFF63GSU	19	36	19	18	53	71	23.8	50.8	10.5	3/8” x 1 1/2 UNC
G1”	PFF64GSU	25	44	24	20	69	80	27,8	57,2	11.5	7/16” x 1 1/2 UNC
G1¼”	PFF65GSU	31	44	27	22	77	94	31.8	66.6	15.0	1/2” x 1 3/4 UNC
G1½”	PFF66GSU	38	51	30	24	89	106	36.5	79.3	17.0	5/8” x 2 1/4 UNC

[1] 4-bolt flange with UNC threads.
[2] 4-bolt flange including UNC screws and O-ring.

Description	Threaded cable joint	Body colour coding	Order no.
Plug EN 175301-803 [1], design type AF, protection class IP65 Voltages up to 250 V	PG 9	black, B grey, A	**5001710** **5001711**
	PG11	black, B grey, A	**5001716** **5001717**

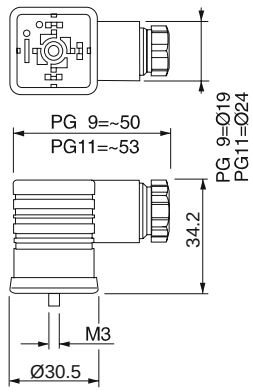

[1] EN 175301-803 (new) corresponding with DIN 43650 (old).

Other plugs on request

9

Series	Description	Size									Body		Page
	DIN / ISO	⅛	¼	⅜	½	¾	1	1¼	1½	2	L-port	T-port	
	Pressure valves, manual operation												
R4V	Pressure relief function				•	•	•	•			•	•	10-2
R4R	Pressure reducing function				•	•	•	•			•	•	10-8
	Pressure valves, proportional operation												
R4V*P2	Pressure relief function				•	•	•	•			•	•	10-14
R4R*P2	Pressure reducing function				•	•	•	•			•	•	10-19
	Directional seat valves												
D4S	In-line mounted				•	•	•	•			•	•	10-24
	Flow valves												
MV / 9MV	Throttle valve, with handle	•	•	•	•	•	•						10-33
N / 9N	Throttle valve, with knob	•	•	•	•	•	•						10-35
F / 9F	Throttle check valve, with knob	•	•	•	•	•	•	•	•	•			10-37
PCM / 9PCM	Flow control valve, with knob		•	•	•	•	•						10-39
	Check valves												
C / 9C	Direct operated	•	•	•	•	•	•						10-41
CP / 9CP	Pilot operated			•		•							10-43
RH	Pilot operated		•	•	•	•							10-45
	Accessories												
	Plug-in connectors												10-48

10

Pilot operated pressure relief valves for in-line mounting series R4V have a similar design to the subplate mounted R4V series. For single functions – where no manifold blocks are used – the valves can be directly placed in the pipework.

The R4V valves are available with 2 ports (L-body) for in-line relief function or with 3 ports (T-body) for relief functions in the bypass.

R4V10 L-body

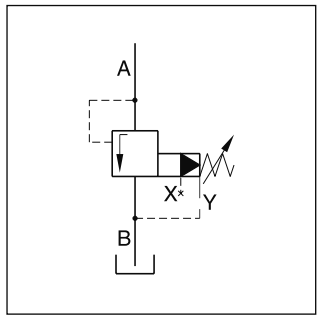

Features

- Pilot operated with manual adjustment
- 2 interfaces:
  - L-body (R4V06-G¾", R4V10-G1¼")
  - T-body (R4V03-G½", R4V06-G1")
- 3 pressure stages
- 3 adjustment modes
  - Hand knob
  - Acorn nut with lead seal
  - Cylinder lock
- With optional vent function

R4V06 L-body

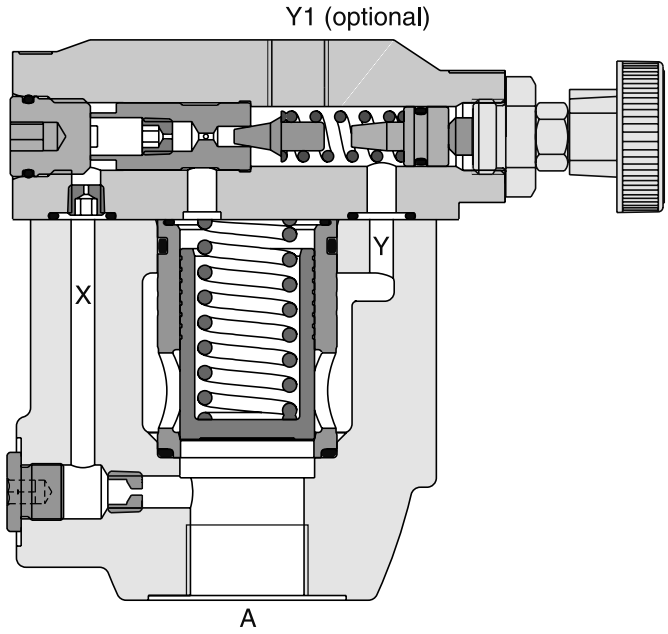

R4V	☐	–	5	☐	☐	☐	☐	☐	☐	A	☐	☐	☐
Pressure relief valve	**Nominal size**		**Max. pressure 350 bar**	**Body**	**Pressure stages**	**Adjust-ment**	**Drain line**	**Switching type**	**Solenoid voltage**	**Design**	**Seal**	**Design series** (not required for ordering)	**Options**

Code	Nominal size
03	NG10 (G½")
06	NG25 (G1" - T-body, G¾" - L-body)
10	NG32 (G1¼")

Code	Body
6	R4V03 T-body R4V06 T-body
D	R4V06 L-body R4V10 L-body

Code	Pressure stages
1	up to 105 bar
3	up to 210 bar
5	up to 350 bar

Code	Adjustment
1	Hand knob
3	Acorn nut with lead seal
4	Cylinder lock

Code	Seal
1	NBR
5	FPM

Code	Solenoid voltage
omit	Standard w/o vent function
G0R	12 V=
G0Q	24 V=
GAR[1)]	98 V=
GAG[1)]	205 V=
W30	110 V / 50 Hz 120 V / 60 Hz
W31	230 V / 50 Hz 240 V / 60 Hz

Code	Switching type
omit	Standard w/o vent function
09	Solenoid not activated unpressure circulation
11	Solenoid activated unpressure circulation

Code	Drain line
0	internal
2	external from pilot head (Y1)

10

[1)] To be used in combination with rectifier plugs at 120 VAC / 230 VAC power supply.

R4V

General					
Design		**T-body**		**L-body**	
Size		**03 (½")**	**06 (1")**	**06 (¾")**	**10 (1¼")**
Mounting		Threaded body			
Mounting position		unrestricted			
Ambient temperature	[°C]	-20...+60			
$MTTF_D$ value	[years]	75			
Weight	[kg]	3.2	6.6	3.3	5.6
Hydraulic					
Max. operating pressure	[bar]	Ports A and X up to 350; Ports B and Y 30 bar			
Pressure stages	[bar]	105, 210, 350			
Nominal flow	[l/min]	60	200	200	450
Fluid		Hydraulic oil according to DIN 51524			
Fluid temperature	[°C]	-20…+70 (NBR: -25…+70)			
Viscosity permitted	[cSt] / [mm^2/s]	20...400			
Viscosity recommended	[cSt] / [mm^2/s]	30...80			
Filtration		ISO 4406 (1999); 18/16/13			

R4V with vent function

General					
Design		**T-body**		**L-body**	
Size		**03 (½")**	**06 (1")**	**06 (¾")**	**10 (1¼")**
Mounting		Threaded body			
Mounting position		unrestricted			
Ambient temperature	[°C]	-20...+60			
$MTTF_D$ value	[years]	75			
Weight	[kg]	4.9	8.3	5.0	7.3
Hydraulic					
Max. operating pressure	[bar]	Ports A and X up to 350; Ports B and Y 30			
Pressure stages	[bar]	105, 210, 350			
Nominal flow	[l/min]	60	200	200	450
Fluid		Hydraulic oil according to DIN 51524			
Fluid temperature	[°C]	-20…+70 (NBR: -25…+70)			
Viscosity permitted	[cSt] / [mm^2/s]	20...400			
Viscosity recommended	[cSt] / [mm^2/s]	30...80			
Filtration		ISO 4406 (1999); 18/16/13			
Electrical (solenoid)					
Duty ratio		100 % ED; CAUTION: coil temperature up to 150 °C possible			
Protection class		IP65 in accordance with EN 60529 (with correctly mounted plug-in connector)			

		Code	G0R	G0Q	GAR	GAG	W30	W31
Supply voltage		[V] [V]	12 V =	24 V =	98 V =	205 V =	110 at 50 Hz 120 at 60 Hz	230 at 50 Hz 240 at 60 Hz
Tolerance supply voltage		[%]	±10	±10	±10	±10	±5	±5
Current consumption	hold	[A]	2.72	1.29	0.33	0.13	0.6 / 0.55	0.3 / 0.27
	in rush	[A]	2.72	1.29	0.33	0.13	2.5 / 2.4	1.25 / 1.2
Power consumption	hold	[W]	32.7	31	31.9	28.2	70/70 VA	70/70 VA
	in rush	[W]	32.7	31	31.9	28.2	280/290 VA	280/290 VA
Solenoid connection			Connector as per EN175301-803, solenoid identification as per ISO 9461					
Wiring min.		[mm^2]	3 x 1.5 recommended					
Wiring length max.		[m]	50 recommended					

p/Q performance curve [1)]

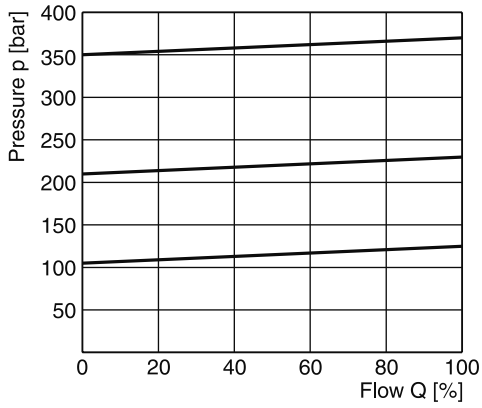

Minimum pressure curve

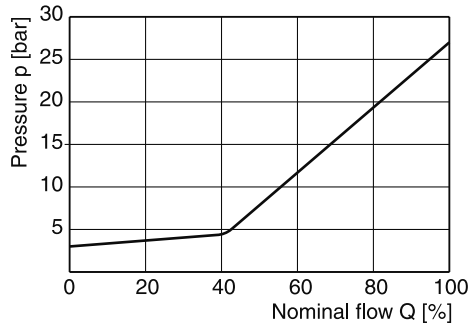

All characteristic curves measured with HLP46 at 50 °C.

Dimensions
T-body

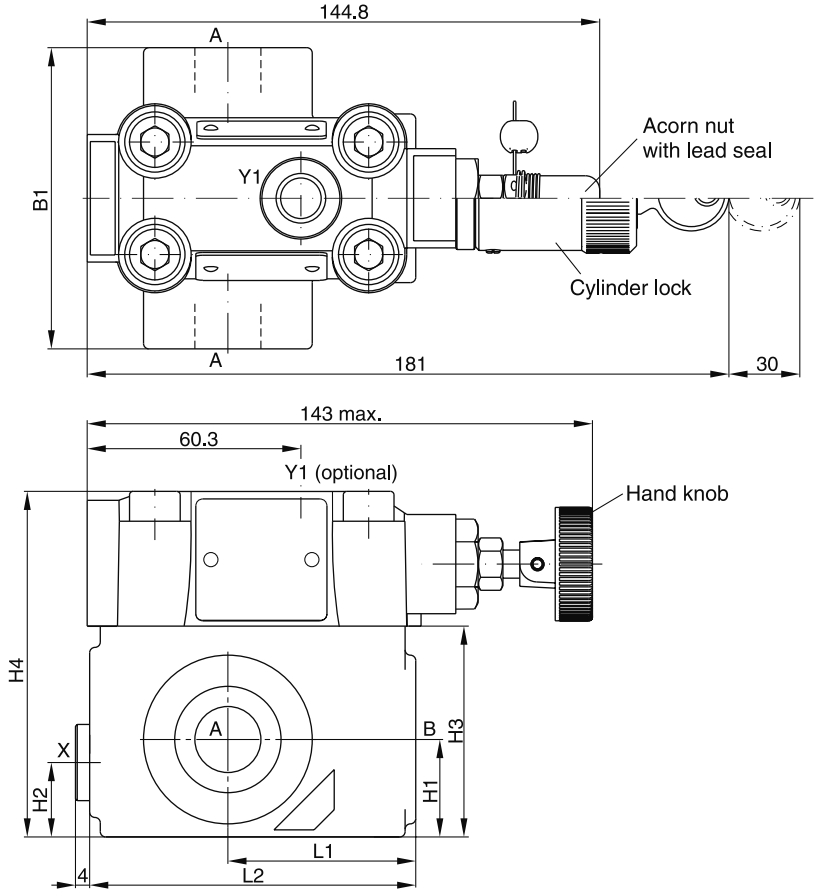

[1)] The performance curves are measured with external drain. For internal drain the tank pressure has to be added to curve.

L-body

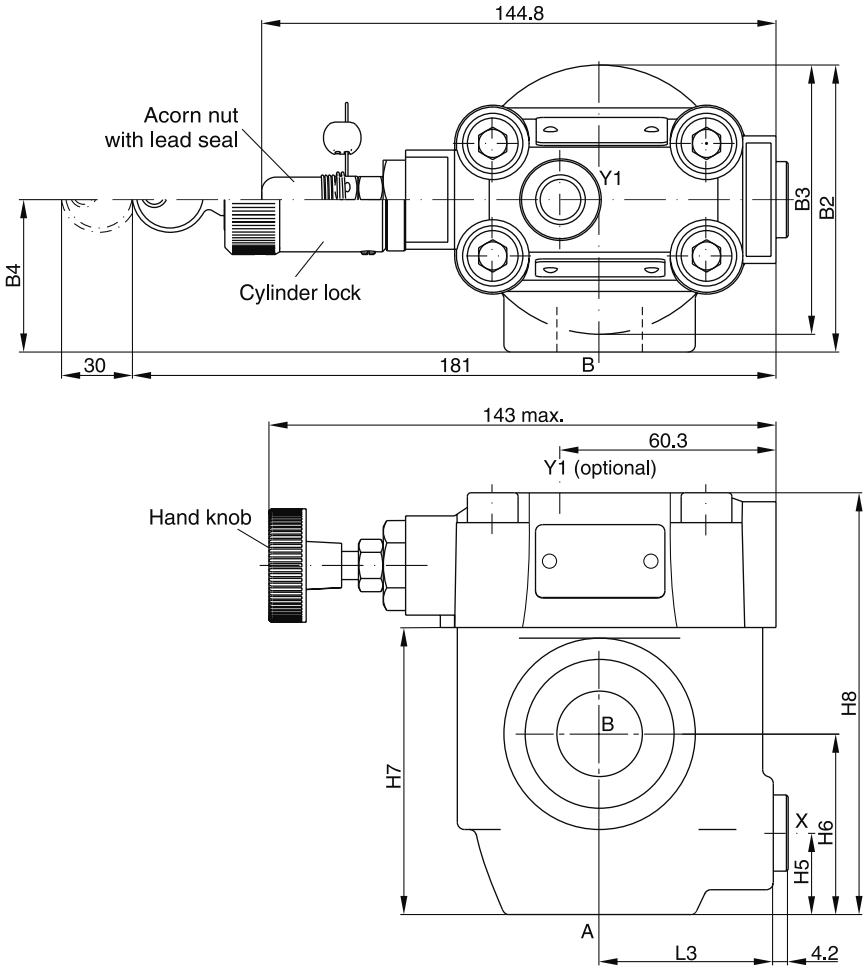

Seal kits		
NG	NBR	FPM
03	S26-58507-0	S26-58507-5
06	S26-58475-0	S26-58475-5
10	S26-58508-0	S26-58508-5

10

NG	Body	B1	B2	B3	B4	H1	H2	H3	H4	H5	H6	H7	H8	L1	L2	L3
03	T-body	85	–	–	–	27.5	21	59.5	97.5	–	–	–	–	53	92	–
06	T-body	136	–	–	–	38	28	93	131	–	–	–	–	66.5	117.5	–
06	L-body	–	81	76	43	–	–	–	–	23	51	81	119	–	–	49
10	L-body	–	120.7	85.8	77.8	–	–	–	–	38.1	50.8	96	134	–	–	49.8

Ports	Function	Port size			
		R4V03 T-body	R4V06 L-body	R4V06 T-body	R4V10 L-body
A	pressure (inlet)	G½ "	G¾ "	G1 "	G1¼ "
B	tank (outlet)	G½ "	G¾ "	G1 "	G1¼ "
X [1)]	external remote control or vent connection	G¼ "	G¼ "	G¼ "	G¼ "
Y1 [2)]	external drain	G¼ "	G¼ "	G¼ "	G¼ "

[1)] Closed when supplied.
[2)] Port Y1 is only available at drain line (code 2) external from the pilot head.

R4V with vent function

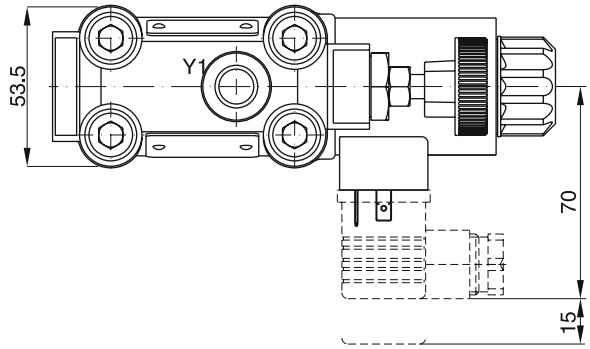

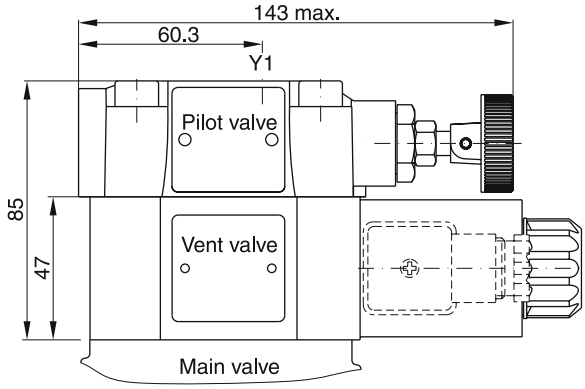

Seal kits	
NBR	**FPM**
DC solenoid	
S56-40609-0	S56-40609-5
AC solenoid	
S26-35237-0	S26-35237-5

Code	Internal drain	External drain
11	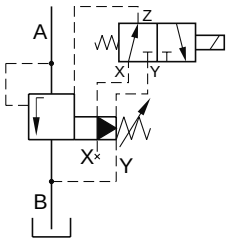	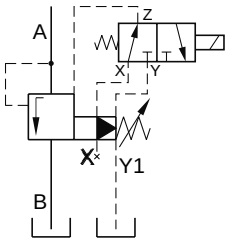
09	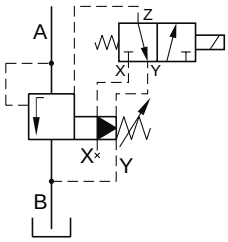	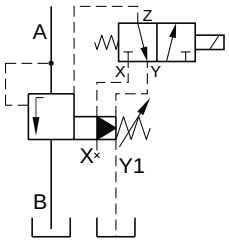

10

Pilot operated pressure reducing valves for in-line mounting series R4R have a similar design to the subplate mounted R4R series. For single functions – where no manifold blocks are used – the valves can be directly placed in the pipework.

The valves are available with 2 ports (L-body) or with 3 ports (T-body).

R4R10 L-body

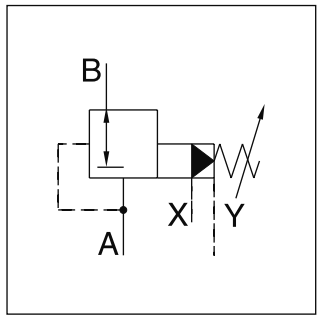

Features

- Pilot operated with manual adjustment
- Normally closed to avoid undesired motion
- 2 interfaces
  - L-body (R4R06-G¾", R4R10-G1¼")
  - T-body (R4R03-G½", R4R06-G1")
- 3 pressure stages
- 3 adjustment modes
  - Hand knob
  - Acorn nut with lead seal
  - Cylinder lock
- With optional vent function

R4R06 L-body

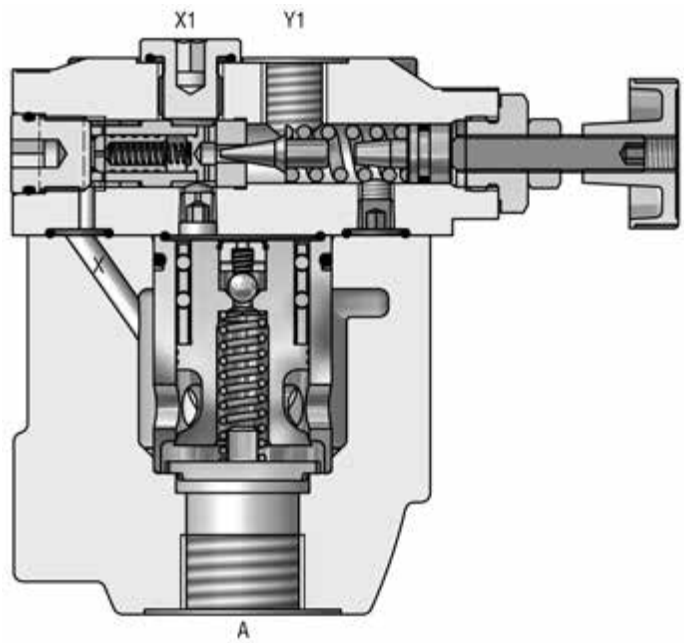

Ordering Code

R4R		–	5				2			B		
Pressure reducing valve	Nominal size		Max. pressure 350 bar	Body	Pressure stages	Adjust-ment	Drain line ext. from pilot head (Y1)	Switching type	Solenoid voltage	Design series	Seal	Options

Code	Nominal size
03	NG10 (G½")
06	NG25 (G1" - T-body, G¾" - L-body)
10	NG32 (G1¼")

Code	Body
6	R4R03 T-body R4R06 T-body
D	R4R06 L-body R4R10 L-body

Code	Pressure stages
1	up to 105 bar
3	up to 210 bar
5	up to 350 bar

Code	Adjustment
1	Hand knob
3	Acorn nut with lead seal
4	Cylinder lock

Code	Seal
1	NBR
5	FPM

Code	Solenoid voltage
omit	Standard w/o vent function
G0R	12 V=
G0Q	24 V=
GAR[1)]	98 V=
GAG[1)]	205 V=
W30	110 V / 50 Hz 120 V / 60 Hz
W31	230 V / 50 Hz 240 V / 60 Hz

Code	Switching type
omit	Standard w/o vent function
09	Solenoid not activated unpressure circulation
11	Solenoid activated unpressure circulation

10

[1)] To be used in combination with rectifier plugs at 120 VAC / 230 VAC power supply.

R4R

General					
Design		**T-body**		**L-body**	
Size		**03 (½")**	**06 (1")**	**06 (¾")**	**10 (1¼")**
Mounting		Threaded body			
Mounting position		unrestricted			
Ambient temperature	[°C]	-20...+60			
$MTTF_D$ value	[years]	75			
Weight	[kg]	3.2	3.3	5.6	6.6
Hydraulic					
Max. operating pressure	[bar]	Ports A, B and X: 350; Port Y depressurized			
Pressure stages	[bar]	105, 210, 350			
Nominal flow	[l/min]	60	200	200	450
Fluid		Hydraulic oil according to DIN 51524			
Fluid temperature	[°C]	-20...+70 (NBR: -25...+70)			
Viscosity permitted	[cSt]/[mm^2/s]	20...400			
Viscosity recommended	[cSt]/[mm^2/s]	30...80			
Filtration		ISO 4406 (1999); 18/16/13			

R4R with vent function

General							
Design		**T-body**			**L-body**		
Size		**03 (½")**	**06 (¾")**		**06 (1")**		**10 (1¼")**
Mounting		Threaded body					
Mounting position		unrestricted					
Ambient temperature	[°C]	-20...+60					
$MTTF_D$ value	[years]	75					
Weight	[kg]	4.9	5.0		7.3		8.3
Hydraulic							
Max. operating pressure	[bar]	Ports A and X up to 350; Ports B and Y depressurized					
Pressure stages	[bar]	105, 210, 350					
Nominal flow	[l/min]	60	200		200		450
Fluid		Hydraulic oil according to DIN 51524					
Fluid temperature	[°C]	-20...+70 (NBR: -25...+70)					
Viscosity permitted	[cSt] / [mm^2/s]	20...400					
Viscosity recommended	[cSt] / [mm^2/s]	30...80					
Filtration		ISO 4406 (1999); 18/16/13					
Electrical (solenoid)							
Duty ratio		100 % ED; CAUTION: coil temperature up to 150 °C possible					
Protection class		IP65 in accordance with EN 60529 (with correctly mounted plug-in connector)					
	Code	G0R	G0Q	GAR	GAG	W30	W31
Supply voltage	[V] [V]	12 V =	24 V =	98 V =	205 V =	110 at 50 Hz 120 at 60 Hz	230 at 50 Hz 240 at 60 Hz
Tolerance supply voltage	[%]	±10	±10	±10	±10	±5	±5
Current consumption hold	[A]	2.72	1.29	0.33	0.13	0.6 / 0.55	0.3 / 0.27
in rush	[A]	2.72	1.29	0.33	0.13	2.5 / 2.4	1.25 / 1.2
Power consumption hold	[W]	32.7	31	31.9	28.2	70 / 70 VA	70 / 70 VA
in rush	[W]	32.7	31	31.9	28.2	280 / 290 VA	280 / 290 VA
Solenoid connection		Connector as per EN175301-803, solenoid identification as per ISO 9461					
Wiring min.	[mm^2]	3 x 1.5 recommended					
Wiring length max.	[m]	50 recommended					

Reduced pressure pA versus flow Q
R4R03 [1)]

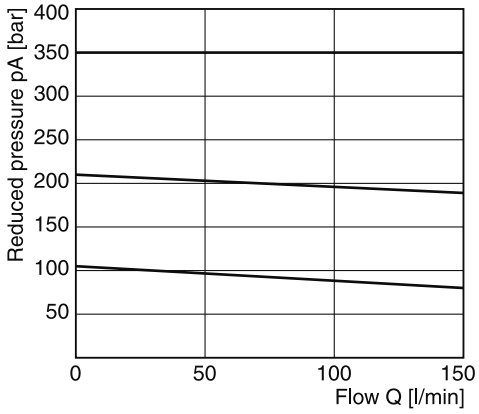

Minimum pressure curve

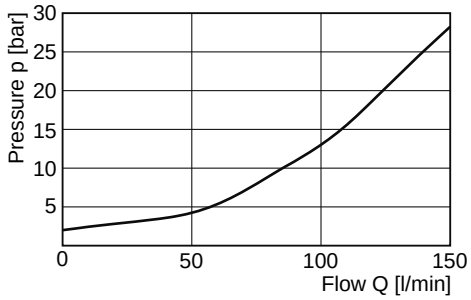

Reduced pressure pA versus flow Q
R4R06 [1)]

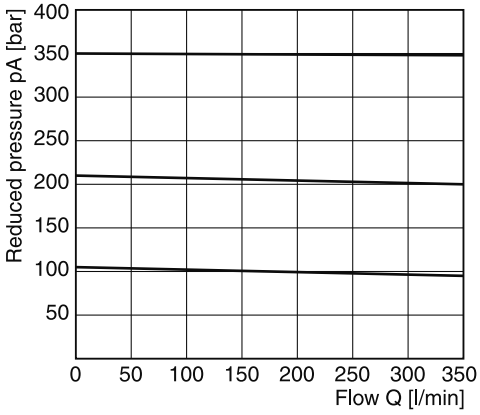

Minimum pressure curve

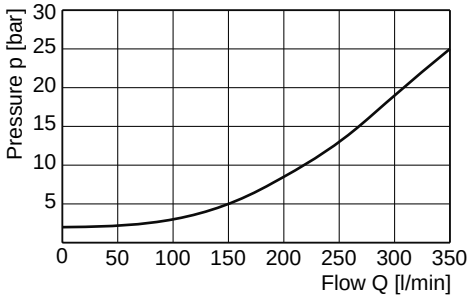

Reduced pressure pA versus flow Q
R4R10 [1)]

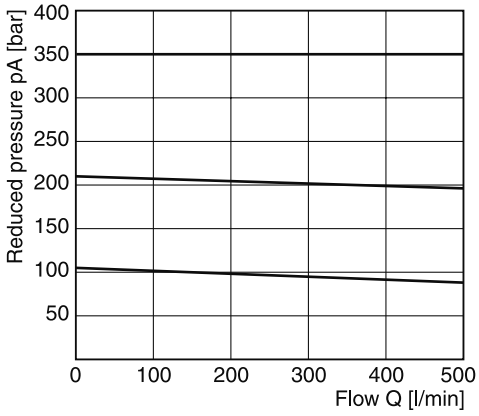

Minimum pressure curve

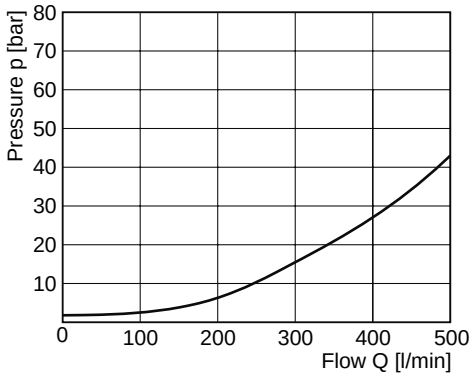

All characteristic curves measured with HLP46 at 50 °C.

[1)] Measured at 350 bar primary pressure pB.

T-body

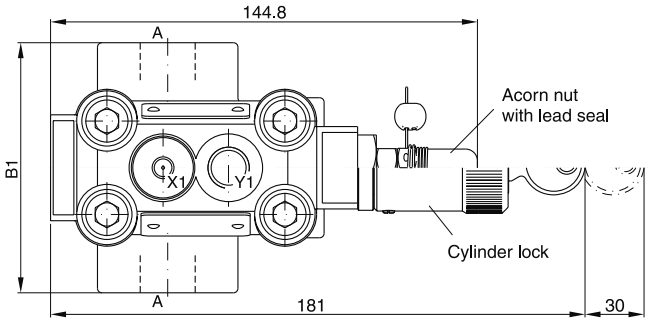

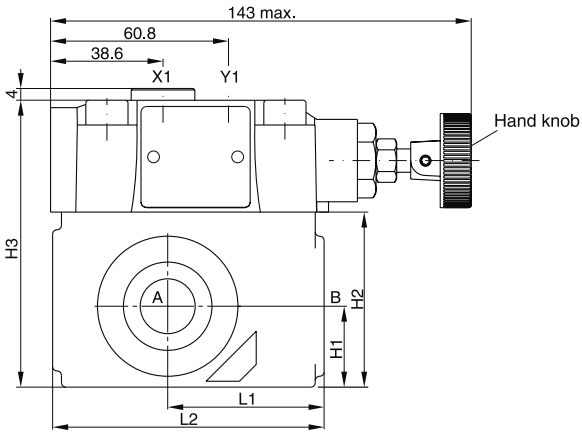

L-body

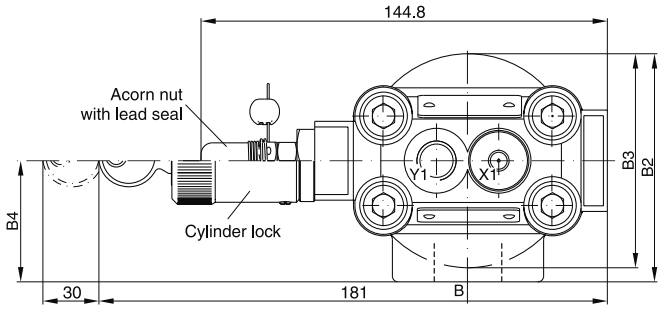

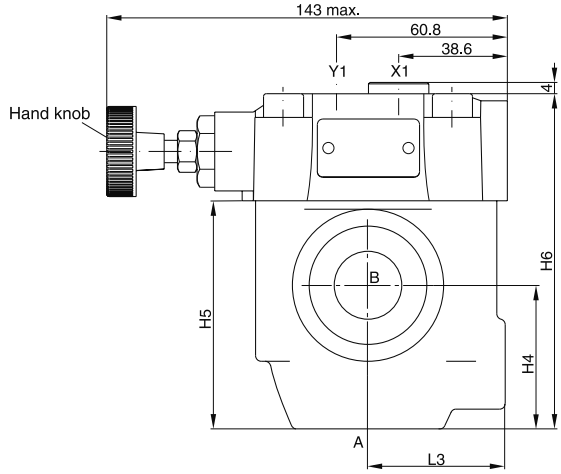

Seal kits		
NG	**NBR**	**FPM**
03	S26-58507-0	S26-58507-5
06	S26-58475-0	S26-58475-5
10	S26-58508-0	S26-58508-5

10

NG	Body	B1	B2	B3	B4	H1	H2	H3	H4	H5	H6	L1	L2	L3
03	T-body	85	–	–	–	27.5	59.5	97.5	–	–	–	53	92	–
06	T-body	136	–	–	–	38	93	131	–	–	–	66.5	117.5	–
06	L-body	–	81	76	43	–	–	–	51	81	119	–	–	49
10	L-body	–	120.7	85.8	77.8	–	–	–	50.8	96	134	–	–	49.8

Ports	Function	Port size			
		R4V03 T-body	R4V06 L-body	R4V06 T-body	R4V10 L-body
B	pressure (inlet)	G½ "	G¾ "	G1 "	G1¼ "
A	pressure (outlet)	G½ "	G¾ "	G1 "	G1¼ "
X1	external remote control or vent connection	G¼ "	G¼ "	G¼ "	G¼ "
Y1	external drain	G¼ "	G¼ "	G¼ "	G¼ "

R4R with vent function

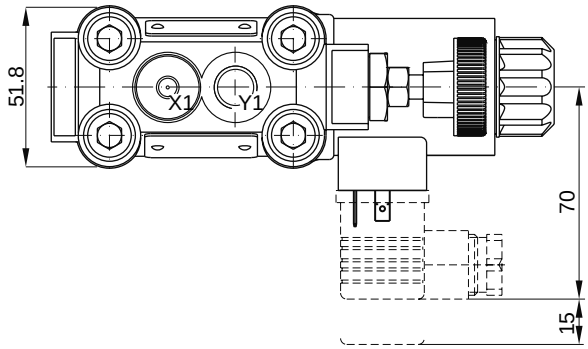

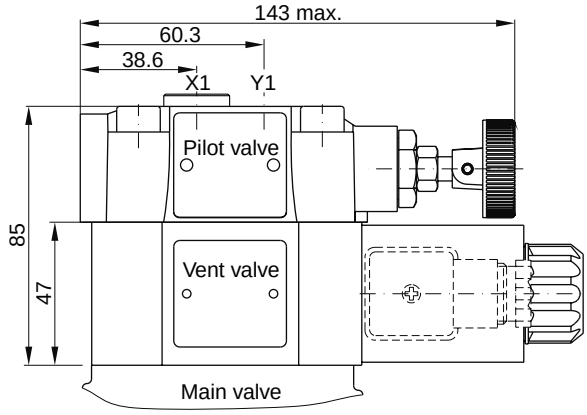

Seal kits	
NBR	**FPM**
DC solenoid	
S56-40609-0	S56-40609-5
AC solenoid	
S26-35237-0	S26-35237-5

Code	External drain
11	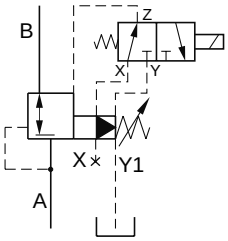
09	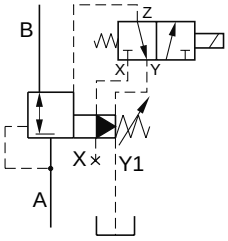

10

Proportional pressure relief valves series R4V*P2 are based on the mechanically adjusted series R4V. The additional proportional unit between the mechanical pilot valve and the main stage allows continuous pressure adjustment.

The optimum performance can be achieved in combination with the digital amplifier module PCD00A-400.

R4V10*P2 L-body

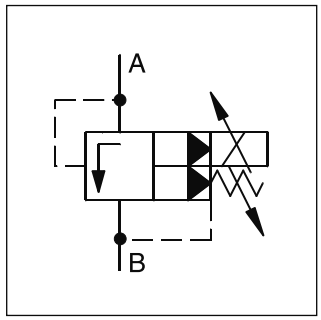

Features

- Continuous adjustment by proportional solenoid
- 2 interfaces
  - L-body (R4V06-G¾", R4V10-G1¼")
  - T-body (R4V03-G½", R4V06-G1")
- 3 pressure stages
- With mechanical maximum pressure adjustment

R4V06*P2 L-body

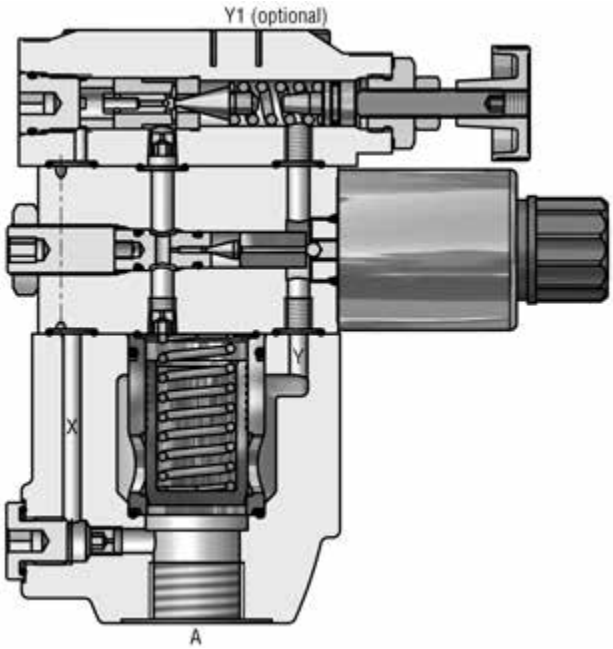

Ordering code

R4V	☐	–	5	☐	☐	☐	☐	P2	G0R	A	☐	☐	☐
Proportional pressure relief valve	**Size**		**Max. pressure 350 bar**	**Body**	**Pressure stages**	**Adjust-ment**	**Drain line**	**Proportional pressure control**	**Solenoid voltage 12 V= [1)]**	**Design**	**Seal**	**Design series** (not required for ordering)	**Options**

Code	Nominal size
03	NG10 (G½")
06	NG25 (G1" - T-body, G¾" - L-body)
10	NG32 (G1¼")

Code	Body
6	R4V03 T-body R4V06 T-body
D	R4V06 L-body R4V10 L-body

Code	Pressure stages
1	up to 105 bar
3	up to 210 bar
5	up to 350 bar

Code	Seal
1	NBR
5	FPM

Code	Drain line
0	internal
2	external from pilot head (Y1)

Code	Adjustment
1	Hand knob
3	Acorn nut with lead seal

[1)] Onboard electronics on request

Technical data R4V*P2

General					
Design		**T-body**		**L-body**	
Size		**03 (½")**	**06 (1")**	**06 (¾")**	**10 (1¼")**
Mounting		Threaded body			
Mounting position		unrestricted			
Ambient temperature	[°C]	-20...+60			
$MTTF_D$ value	[years]	75			
Weight	[kg]	5.0	5.1	7.4	8.4
Hydraulic					
Max. operating pressure	[bar]	Ports A and X up to 350; Ports B and Y 30 bar			
Pressure stages	[bar]	105, 210, 350			
Nominal flow	[l/min]	60	200	200	450
Fluid		Hydraulic oil according to DIN 51524			
Fluid temperature	[°C]	-20...+70 (NBR: -25...+70)			
Viscosity permitted	[cSt] / [mm^2/s]	20...400			
Viscosity recommended	[cSt] / [mm^2/s]	30...80			
Filtration		ISO 4406 (1999), 18/16/13			
Electrical (prop. solenoid)					
Duty ratio	[%]	100			
Nominal voltage	[V]	12 =			
Max. current	[A]	2.3			
Coil resistance	[Ohm]	4 at 20 °C			
Solenoid connection		Connector as per EN175301-803			
Protection class		IP65 in accordance with EN 60529 (with correctly mounted plug-in connector)			
Power amplifier		PCD00A-400			

R4VP2 UK.indd CM 18.02.15

Signal/pressure curve R4V

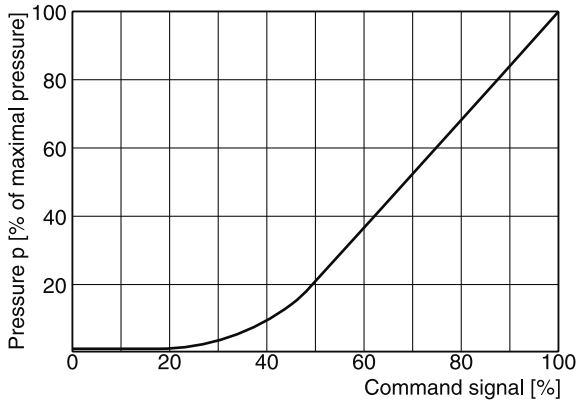

p/Q performance curves [1)]

R4V03

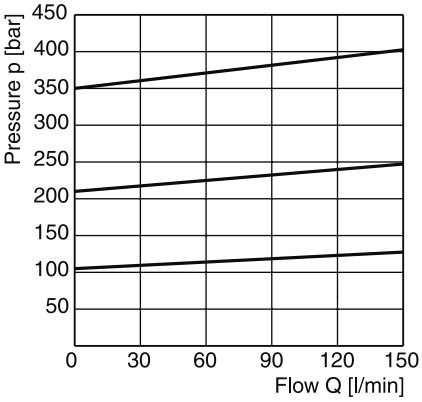

R4V06

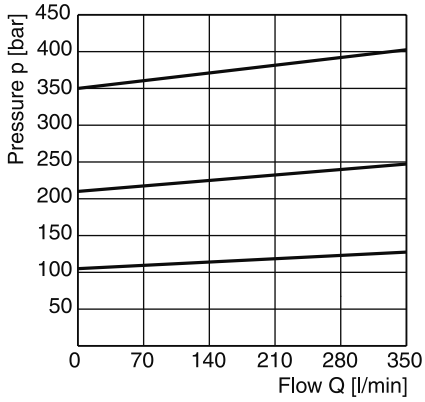

R4V10

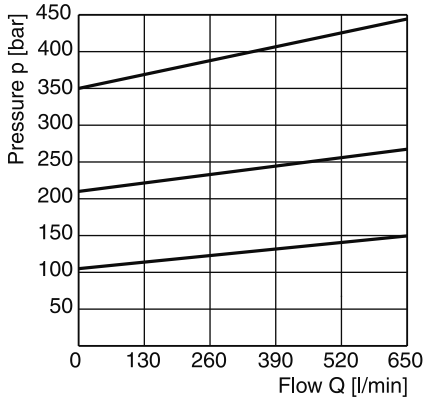

10

Minimum pressure curve [1)]

R4V03

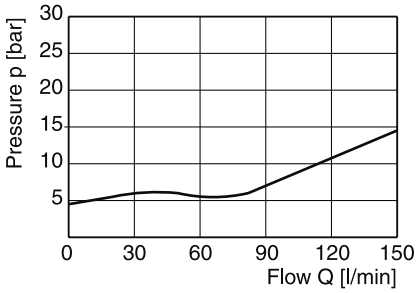

R4V06

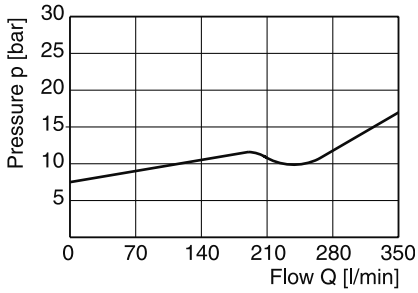

R4V10

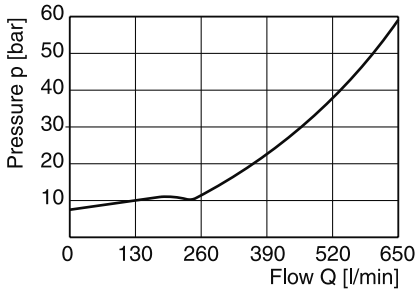

All characteristic curves measured with HLP46 at 50 °C.

[1)] The performance curves are measured with external drain. For internal drain the tank pressure has to be added to curve.

T-body

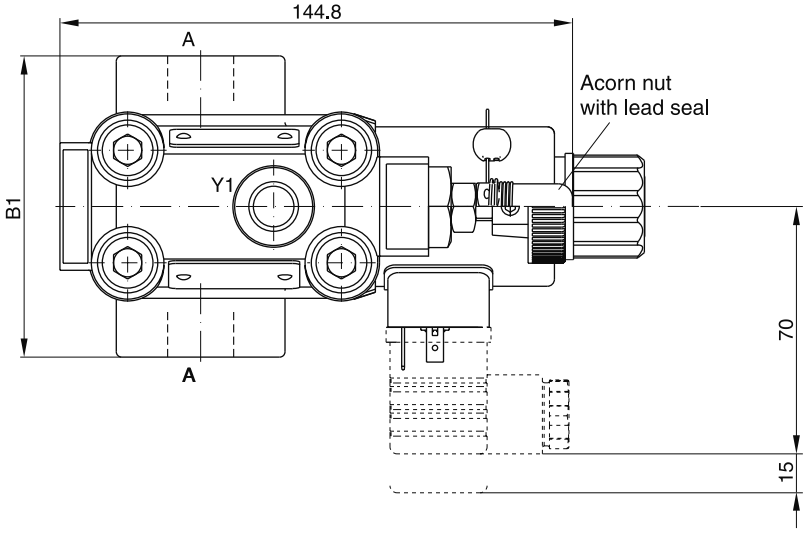

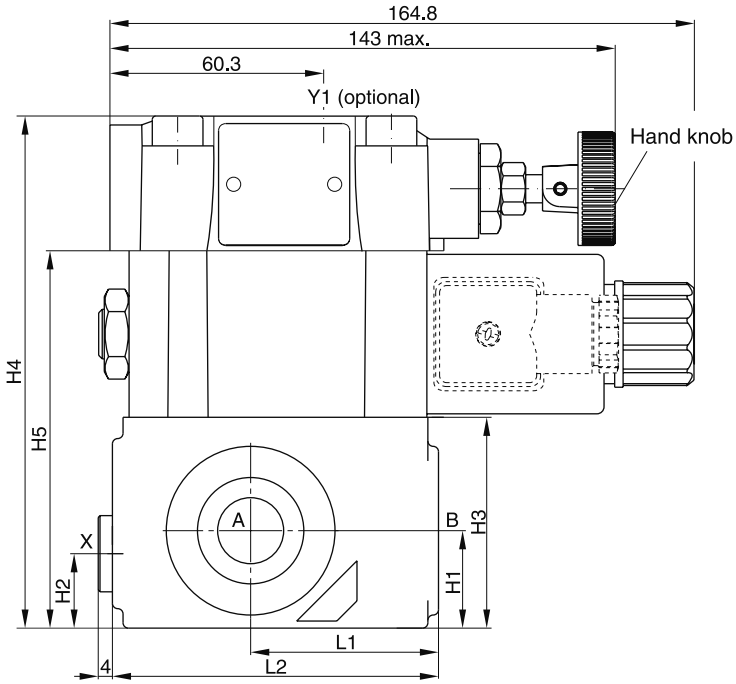

Seal kits		
NG	**NBR**	**FPM**
03	S26-58507-0	S26-58507-5
06	S26-58475-0	S26-58475-5
Prop. section P2*	S26-58473-0	S26-58473-5

10

NG	Body	B1	H1	H2	H3	H4	H5	L1	L2
03	T-body	85	27.5	21	59.5	144.5	106.5	53	92
06	T-body	136	38	28	93	178	140	66.5	117.5

Ports	Function	Port size	
		R4V03*P2 T-body	R4V06*P2 T-body
A	pressure (inlet)	G½ "	G1 "
B	tank (outlet)	G½ "	G1 "
X [1)]	ext. remote control or vent connection	G¼ "	G¼ "
Y1 [2)]	external drain	G¼ "	G¼ "

* Please combine seal kit of one size with seal kit of prop. section for complete seal kit.
[1)] Closed when supplied.
[2)] Port Y1 is only available at drain line (code 2) external from the pilot head.

R4VP2 UK.indd CM 18.02.15

L-body

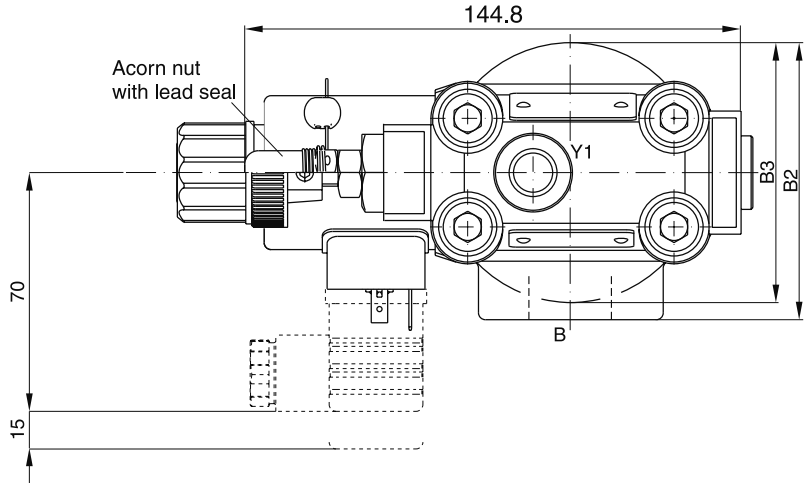

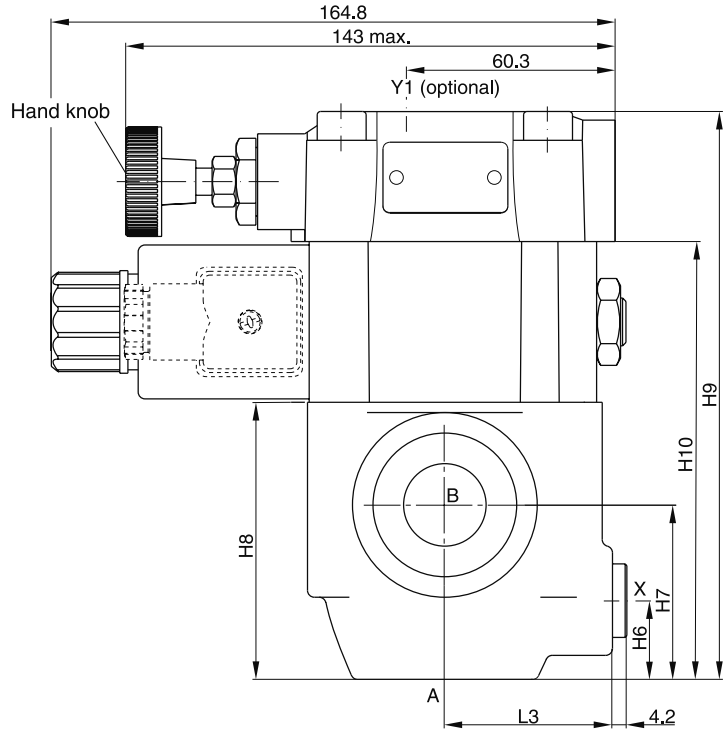

Seal kits		
NG	**NBR**	**FPM**
06	S26-58475-0	S26-58475-5
10	S26-58508-0	S26-58508-5
Prop. section P2*	S26-58473-0	S26-58473-5

NG	Body	B2	B3	H6	H7	H8	H9	H10	L3
06	L-body	81	76	23	51	81	166	128	49
10	L-body	120.7	85.8	38.1	50.8	96	181	143	49.8

Ports	Function	Port size	
		R4V06 L-body	R4V10 L-body
A	pressure (inlet)	G¾ "	G1¼ "
B	tank (outlet)	G¾ "	G1¼ "
X [1]	ext. remote control or vent connection	G¼ "	G¼ "
Y1 [2]	external drain	G¼ "	G¼ "

* Please combine seal kit of one size with seal kit of prop. section for complete seal kit.
[1] Closed when supplied.
[2] Port Y1 is only available at drain line (code 2) external from the pilot head.

Proportional pressure reducing valves series R4R*P2 are based on the mechanically adjusted series R4R. The additional proportional unit between the mechanical pilot valve and the main stage allows continuous pressure adjustment.
The optimum performance can be achieved in combination with the digital amplifier module PCD00A-400.

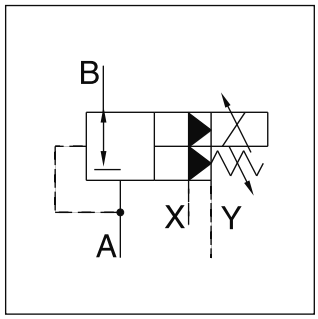

R4R10*P2 L-body

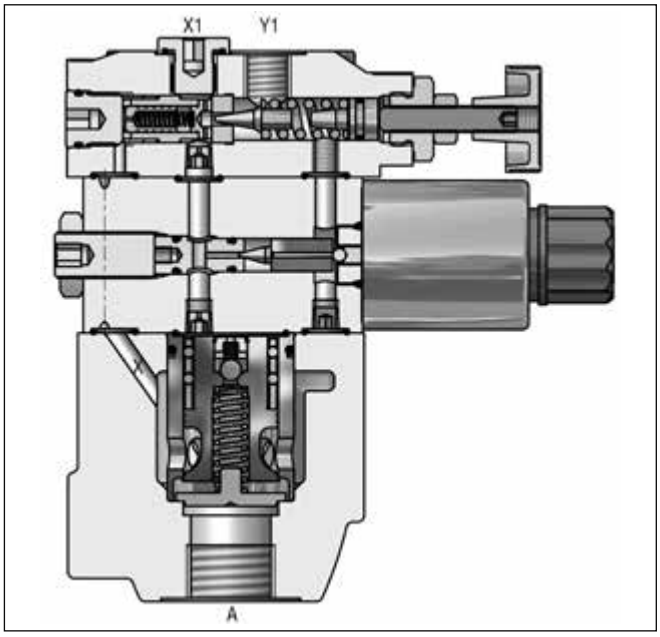

R4R06*P2 L-body

Features

- Continuous adjustment by proportional solenoid
- Normally closed to avoid undesired motion
- 2 interfaces
  - L-body (R4R06-G¾", R4R10-G1¼")
  - T-body (R4R03-G½", R4R06-G1")
- 3 pressure stages
- With mechanical maximum pressure adjustment

Ordering code

R4R	☐	–	5	☐	☐	☐	2	P2	G0R	B	☐	☐
Pressure reducing valve	Nominal size		Max. pressure 350 bar	Body	Pressure stages	Adjust-ment	Drain line ext. from pilot head (Y1)	Proportional pressure control	Solenoid voltage 12 V=	Design series	Seal	Options

Code	Nominal size
03	NG10 (G½")
06	NG25 (G1" - T-body, G¾" - L-body)
10	NG32 (G1¼")

Code	Body
6	R4R03 T-body R4R06 T-body
D	R4R06 L-body R4R10 L-body

Code	Seal
1	NBR
5	FPM

Code	Adjustment
1	Hand knob
3	Acorn nut with lead seal

Code	Pressure stages
1	up to 105 bar
3	up to 210 bar
5	up to 350 bar

Technical data

General					
Design		T-body		L-body	
Size		**03 (½")**	**06 (1")**	**06 (¾")**	**10 (1¼")**
Mounting		Threaded body			
Mounting position		unrestricted			
Ambient temperature	[°C]	-20...+60			
$MTTF_D$ value	[years]	75			
Weight	[kg]	5.0	5.1	7.4	8.4
Hydraulic					
Max. operating pressure	[bar]	Ports A, B and X up to 350; Port Y depressurized			
Pressure stages	[bar]	105, 210, 350			
Nominal flow	[l/min]	60	200	200	450
Fluid		Hydraulic oil according to DIN 51524			
Fluid temperature	[°C]	-20...+70 (NBR: -25...+70)			
Viscosity, permitted	[cSt]/[mm²/s]	20...400			
recommended	[cSt]/[mm²/s]	30...80			
Filtration		ISO 4406 (1999) 18/16/13			
Electrical (prop. solenoid)					
Duty ratio	[%]	100			
Nominal voltage	[V]	12 =			
Max. current	[A]	2.3			
Coil resistance	[Ohm]	4 at 20 °C			
Solenoid connection		Connector as per EN175301-803			
Protection class		IP65 in accordance with EN 60529 (with correctly mounted plug-in connector)			
Power amplifier		PCD00A-400			

Command/pressure curve

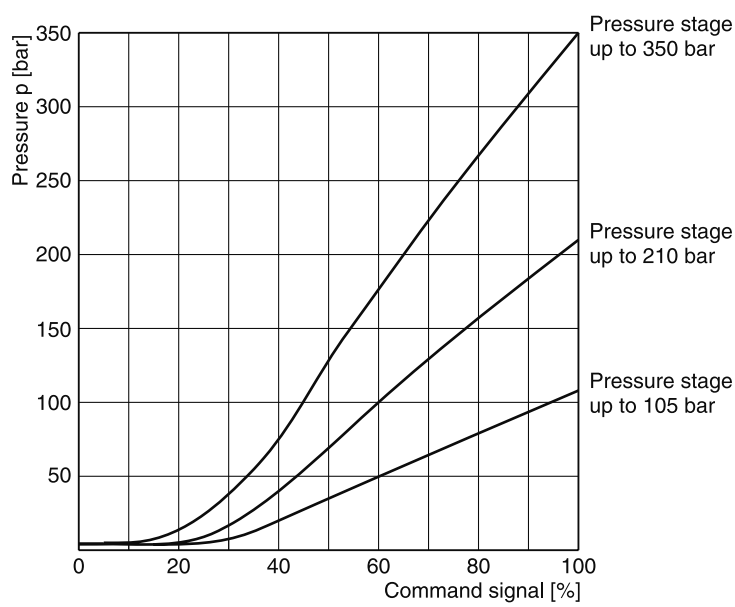

All characteristic curves measured with HLP46 at 50 °C.

Reduced pressure pA versus flow Q
R4R03 [1)]

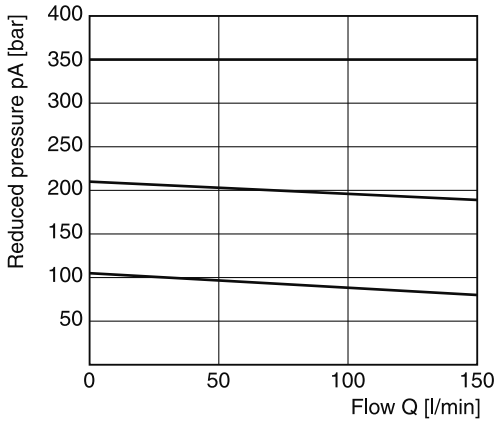

Minimum pressure curve

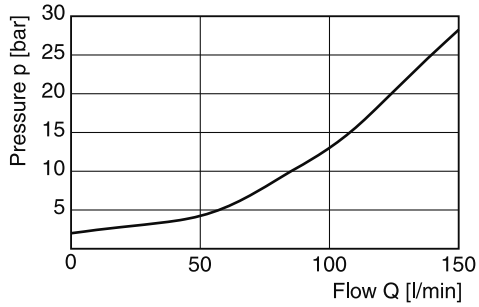

Reduced pressure pA versus flow Q
R4R06 [1)]

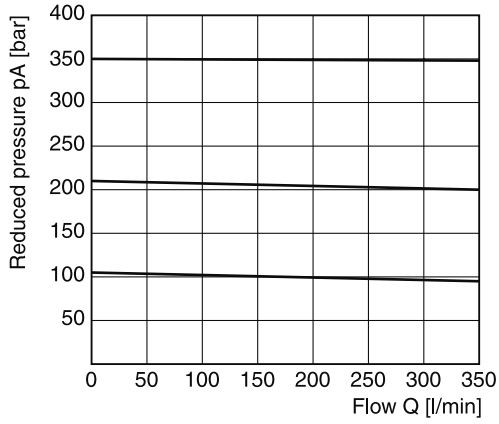

Minimum pressure curve

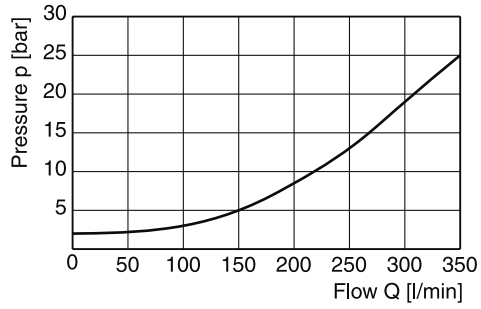

Reduced pressure pA versus flow Q
R4R10 [1)]

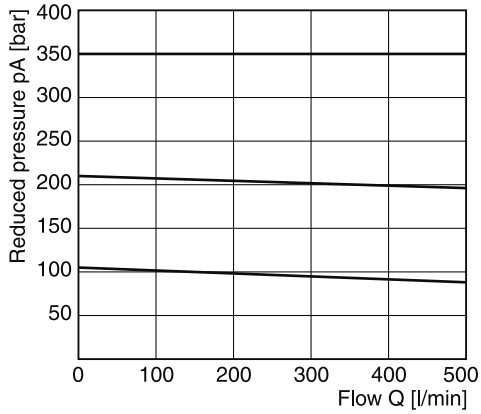

Minimum pressure curve

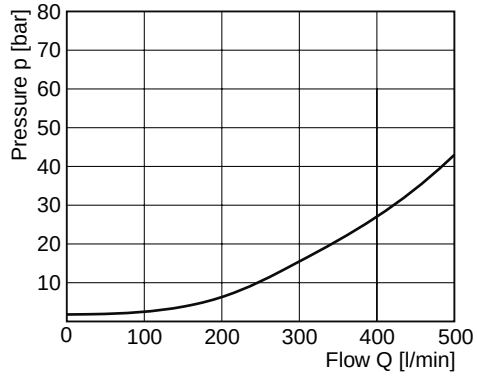

All characteristic curves measured with HLP46 at 50 °C.

[1)] Measured at 350 bar primary pressure pB.

R4RP2 UK.indd CM 18.02.15

T-body

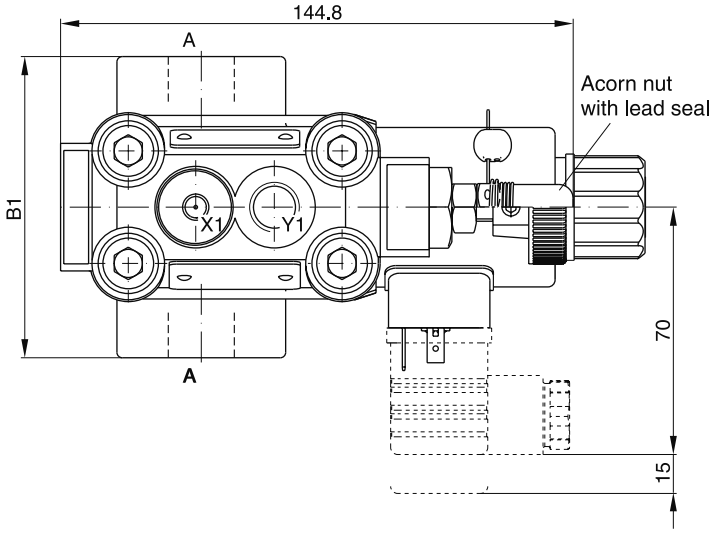

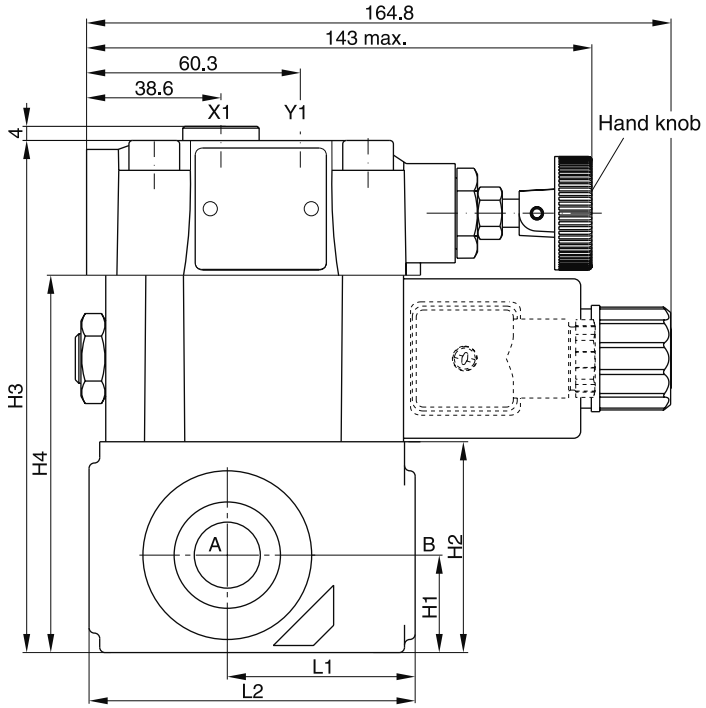

Seal kits		
NG	**NBR**	**FPM**
03	S26-58507-0	S26-58507-5
06	S26-58475-0	S26-58475-5
Prop. section P2*	S26-58473-0	S26-58473-5

NG	Body	B1	H1	H2	H3	H4	L1	L2
03	T-body	85	27.5	59.5	144.5	106.5	53	92
06	T-body	136	38	93	178	140	66.5	117.5

Ports	Function	Port size	
		R4V03*P2 T-body	R4V06*P2 T-body
B	pressure (inlet)	G½ "	G1 "
A	pressure (outlet)	G½ "	G1 "
X1 [1)]	ext. remote control or vent connection	G¼ "	G¼ "
Y1	external drain	G¼ "	G¼ "

* Please combine seal kit of one size with seal kit of prop. section for complete seal kit.
[1)] Closed when supplied.

R4RP2 UK.indd CM 18.02.15

L-body

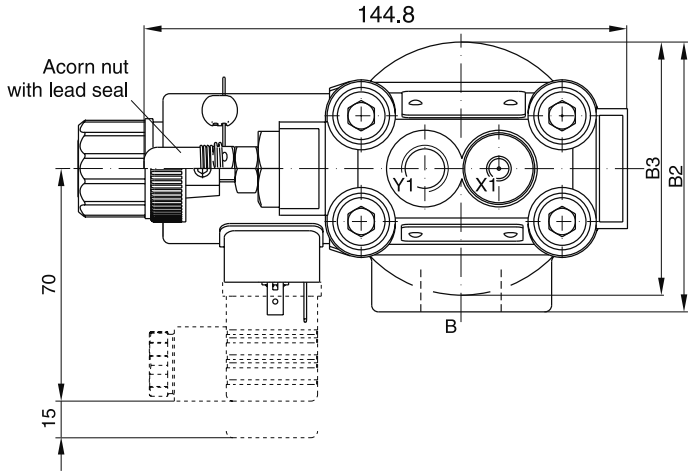

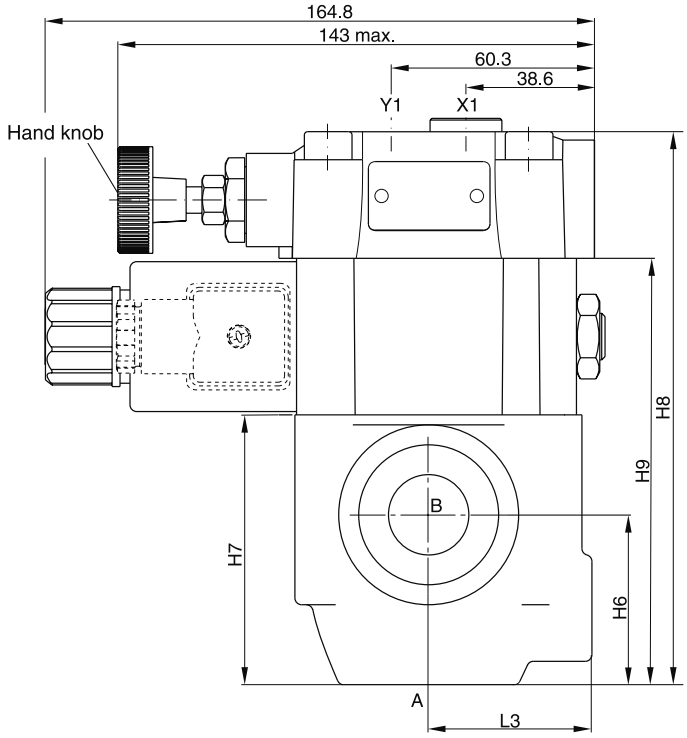

Seal kits		
NG	**NBR**	**FPM**
06	S26-58475-0	S26-58475-5
10	S26-58508-0	S26-58508-5
Prop. section P2*	S26-58473-0	S26-58473-5

NG	Body	B2	B3	H6	H7	H8	H9	L3
06	L-body	81	76	51	81	166	128	49
10	L-body	120.7	85.8	50.8	96	181	143	49.8

Ports	Function	Port size	
		R4V06*P2 L-body	R4V10*P2 L-body
B	pressure (inlet)	G¾ "	G1¼ "
A	pressure (outlet)	G¾ "	G1¼ "
X1 [1)]	ext. remote control or vent connection	G¼ "	G¼ "
Y1	external drain	G¼ "	G¼ "

* Please combine seal kit of one size with seal kit of prop. section for complete seal kit.
[1)] Closed when supplied.

R4RP2 UK.indd CM 18.02.15

Seat valves series D4S are designed for directional control functions. A large variety of poppets, springs and covers – including shuttle valves, stroke limiters, solenoid valves (VV01) and position control – allows to design individual hydraulic solutions for nominal flow up to 600 l/min.

A complete program is offered under the Parker brand:
subplate mounted valves (D4S - chapter 6),
SAE flange valves (D5S - chapter 9),
pipe mounted valves (D4S - chapter 10),
slip-in cartridges (CAR - on request).

D4S10 L-body

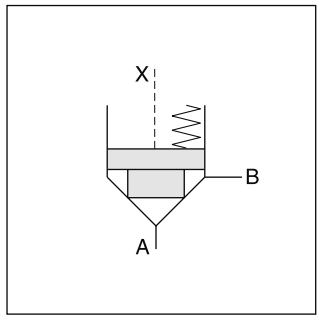

Features

- Leak-free seat valve design
- 2 body designs
  - L-body (2-port)
  - T-body (3-port)
- Numerous pilot options
- 4 port sizes
  - G ½", G 1" for T-body
  - G ¾", G 1 ¼" for L-body
- 6 poppet types

D4S06 L-body

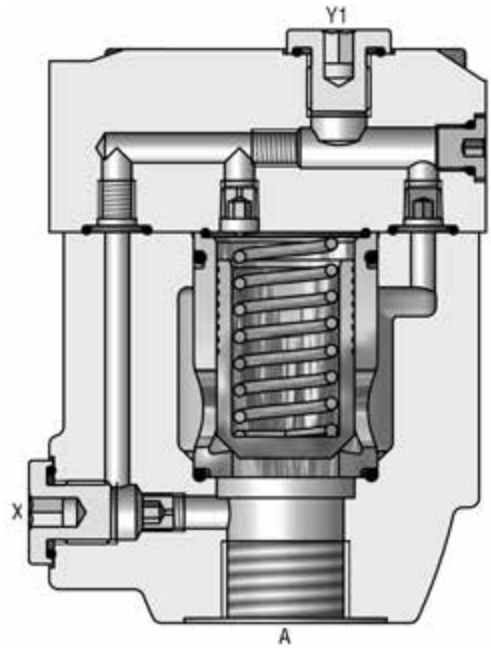

D4S	☐	–	☐	☐	☐	☐	☐	☐	☐	☐	B	☐	☐
Seat valve	Nominal size		Body	Pilot connection	Cap version	Sleeve	Spool type	Spring	Switching type	Solenoid voltage	Design series	Seals	Options

Code	Port size
03	NG10 (CAR4 build-in)
06	NG25 (CAR2 build-in)
10	NG32 (CAR2 build-in)

Code	Body	Ports
6	D4S03 T-body D4S06 T-body	A, B = G½"; X, Y1 = G¼" A, B = G1"; X, Y1 = G¼"
D	D4S06 L-body D4S10 L-body	A, B = G¾"; X, Y1 = G¼" A, B = G1¼"; X, Y1 = G¼"

Code	Pilot oil line in body		
		A-X	B-Y
1	internal from A	⊖	○
2	internal from X	●	○

Code	Ports	X	Y	Z	X-Y	Y1	VV01
	Standard						
1	Pilot oil = pilot drain	○	●	⊖	○	●	—
C	Pilot oil = pilot drain	●	○	⊖	○	●	—
	With solenoid valve (VV01)						
2	Ext. PD from cap	○	○	⊖	●	○	●
6	Internal pilot drain	○	○	⊖	●	●	○
	With stroke limiter (not for D4S03)						
3	Pilot oil = pilot drain	⊖	●	—	—	—	—
4	Pilot oil = pilot drain	●	⊖	—	—	—	—

○ open bore ● closed bore ⊖ orifice Ø 1.2

Code	Sleeve
1	AA = 95 %, AB = 5 %
3	AA = 60 %, AB = 40 %

Code	Size	Poppet type	Sleeve
1	03, 06,10	With closed bottom and 15° chamfer (pZ max. = pA +20 bar	1
2	03	With 0.8 dia. orifice at the bottom and 15° chamfer	1
	06, 10	With 1.2 dia. orifice at the bottom and 15° chamfer	1
4	03, 06,10	With closed bottom and 45° chamfer	1, 3
A[1]	06, 10	Safety spool (for position control only)	3
B[1]	06, 10	Throttle spool, 10° chamfer	3
C[1]	06, 10	Throttle spool, 3° chamfer	3

Code	Options
omit	Standard
013	Cover for position control

Code	Seals
1	NBR
5	FPM

Code	Solenoid voltage
omit	Standard w/o vent function
G0R	12 V=
G0Q	24 V=
GAR [3]	98 V=
GAG [3]	205 V=
W30	110 V / 50 Hz; 120 V / 60 Hz
W31	230 V / 50 Hz; 240 V / 60 Hz

Code	Switching type	
omit	Standard w/o vent function	
09	VV01 with manual override	de-energized: open
10	VV01 without manual override	
11	VV01 with manual override	de-energized: closed
12	VV01 without manual override	
CA	Shuttle valve	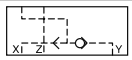
DA	Shuttle valve	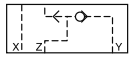
CB	VV01 code 09 and shuttle valve code CA	
CD	VV01 code 11 and shuttle valve code CA	
DB	VV01 code 09 and shuttle valve code DA	
DD	VV01 code 11 and shuttle valve code DA	
BH	VV01 code 10 and shuttle valve code CA and position control [2] with amplifier	
BK	VV01 code 12 and shuttle valve code CA and position control [2] with amplifier	
BN	VV01 code 10 and shuttle valve code DA and position control [2] with amplifier	
BQ	VV01 code 12 and shuttle valve code DA and position control [2] with amplifier	
BC	VV01 code 10 and position control [2] with amplifier	
BE	VV01 code 12 and position control [2] with amplifier	
BA	Position control [2] with amplifier	
BF	Position control [2] with amplifier and shuttle valve code CA	
BL	Position control [2] with amplifier and shuttle valve code DA	

Code	Spring (approx. cracking pressure [bar])					
	Sleeve Code 1		Sleeve Code 3			
	A -> B		A -> B		B -> A	
	D4S03	D4S06/10	D4S03	D4S06/10	D4S03	D4S06/10
1	2.8	3.5	6.5	6.5	9.5	11.0
2	0.5	0.5	1.0	1.0	1.5	1.7
3	0.3	0.3	0.6	0.6	0.9	1.0
4	2.2	2.2	4.0	3.5	5.5	6.0
5	—	9.0	—	16.0	—	28.0
6	1.2	1.2	2.0	2.2	3.0	3.8
7	3.0	—	8.0	—	12.0	—

Examples see end of chapter

[1] Springs 2, 3 and 6 only.
[2] Position control for D4S06/10 only. Spring 2 or 4.
Spool A and sleeve 3. Valve open: proximity switch damped.
[3] To be used in combination with rectifier plugs at 120 VAC / 230 VAC power supply.

Technical data

General							
Design			**T-body**		**L-body**		
Size			**03 (½")**	**06 (1")**	**06 (¾")**	**10 (1¼")**	
Mounting			Threaded body				
Mounting position			unrestricted				
Ambient temperature		[°C]	-20...+60				
$MTTF_D$ value		[years]	150				
Weight	D4S T-body	[kg]	3.2	6.6	—	—	
	D4S L-body	[kg]	—	—	3.3	5.6	
Hydraulic							
Max. operating pressure		[bar]	Ports A, B up to 350; Port Y 140 (with VV01)				
Nominal flow		[l/min]	180	360	360	600	
Fluid			Hydraulic oil according to DIN 51524				
Fluid temperature		[°C]	-20...+70 (NBR: -25...+70)				
Viscosity,	permitted	[cSt]/[mm²/s]	20...400				
	recommended	[cSt]/[mm²/s]	30...80				
Filtration			ISO 4406 (1999); 18/16/13				
Electrical (solenoid)							
Duty ratio			100 % ED; CAUTION: coil temperature up to 150 °C possible				
Protection class			IP65 in accordance with EN 60529 (with correctly mounted plug-in connector)				
		Code	G0R	G0Q	GAR	GAG	W30	W31
Supply voltage		[V] [V]	12 V =	24 V =	98 V =	205 V =	110 at 50 Hz 120 at 60 Hz	230 at 50 Hz 240 at 60 Hz
Tolerance supply voltage		[%]	±10	±10	±10	±10	±5	±5
Current consumption	hold	[A]	2.72	1.29	0.33	0.13	0.6 / 0.55	0.3 / 0.27
	in rush	[A]	2.72	1.29	0.33	0.13	2.5 / 2.4	1.25 / 1.2
Power consumption	hold	[W]	32.7	31	31.9	28.2	70/70 VA	70/70 VA
	in rush	[W]	32.7	31	31.9	28.2	280/290 VA	280/290 VA
Solenoid connection			Connector as per EN175301-803, solenoid identification as per ISO 9461					
Wiring min.		[mm²]	3 x 1.5 recommended					
Wiring length max.		[m]	50 recommended					

D4S pilot configuration

L-body (2-port)	**T-body (3-port)**
Standard	
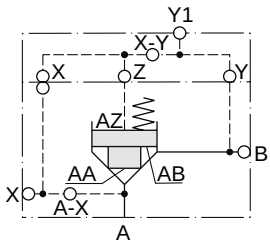	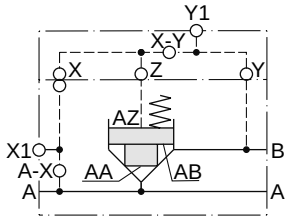
with vent valve VV01	
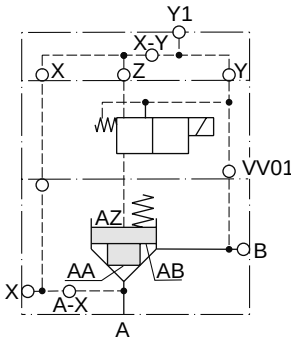	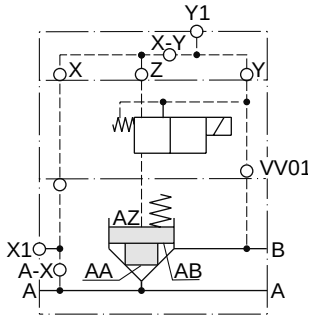

Δp/Q performance curves

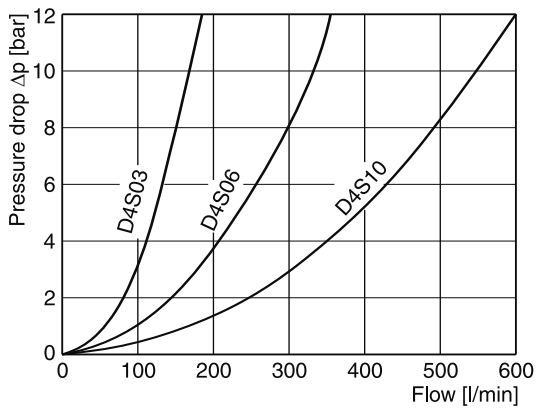

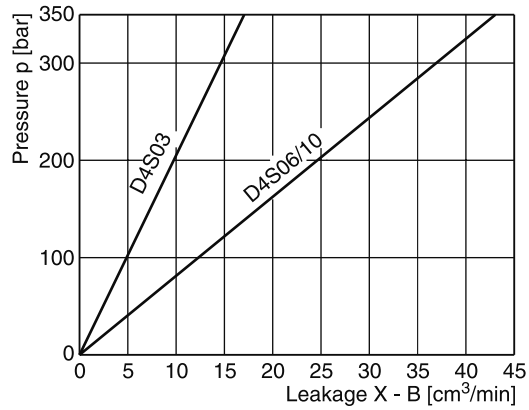

All characteristic curves measured with HLP46 at 50 °C.

Selection of cartridges

Sleeve 1, poppet 1	Sleeve 1, poppet 2	Sleeve 1, poppet 4	Sleeve 3, poppet 4	Sleeve 3, poppet A	Sleeve 3, poppet B/C
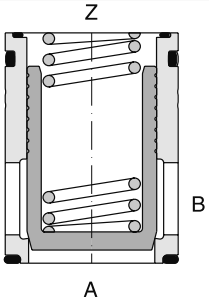	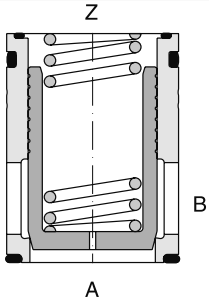	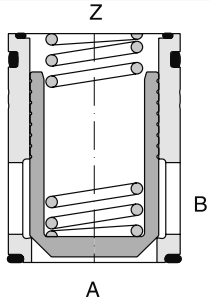	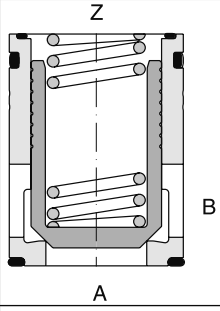	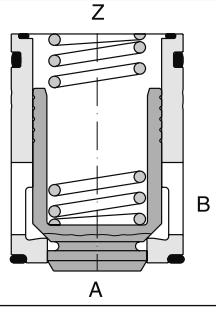	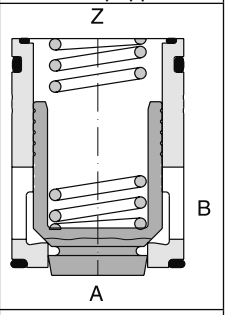
1 : 1.05 $A_A = 0.95\ A_C$ $A_B = 0.05\ A_C$ 15° chamfer	1 : 1.05 $A_A = 0.95\ A_C$ $A_B = 0.05\ A_C$ 15° chamfer orifice	1 : 1.05 $A_A = 0.95\ A_C$ $A_B = 0.05\ A_C$ 45° chamfer	1 : 1.67 $A_A = 0.6\ A_C$ $A_B = 0.4\ A_C$ 45° chamfer	1 : 1.67 $A_A = 0.6\ A_C$ $A_B = 0.4\ A_C$ 45° chamfer safety spool	1 : 1.67 $A_A = 0.6\ A_C$ $A_B = 0.4\ A_C$ 45° chamfer throttle spool

10

D4S 03/06 T-body

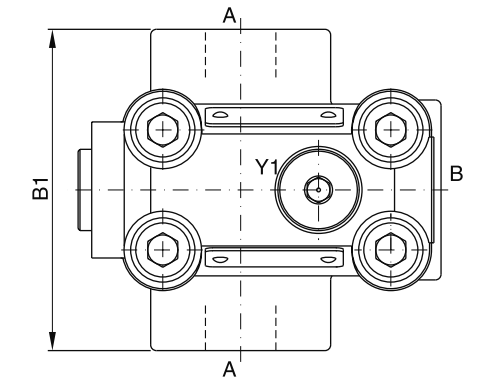

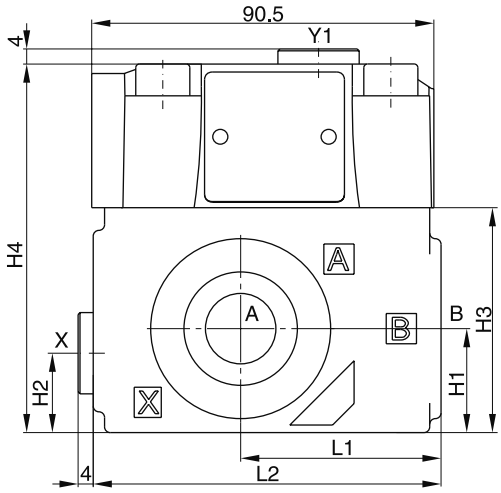

D4S 06/10 L-body

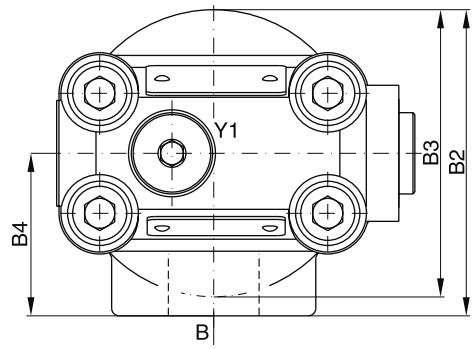

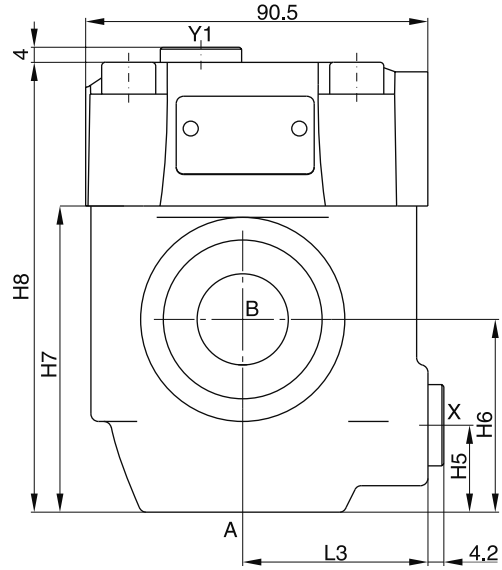

Seal kits		
NG	NBR	FPM
03	S26-58507-0	S26-58507-5
06	S26-58475-0	S26-58475-5
10	S26-58508-0	S26-58508-5

Size	L1	L2	B1	H1	H2	H3	H4
03 (T-body)	53	92	85	27.5	21	59.5	97.5
06 (T-body)	66.5	117.5	136	38	28	93	131

Size	L3	B2	B3	B4	H5	H6	H7	H8
06 (L-body)	49	81	76	43	23	51	81	119
10 (L-body)	49.8	120.7	85.6	77.8	38.1	50.8	96	134

Ports	Function	Port size			
		D4S03 T-body	D4S06 L-body	D4S06 T-body	D4S10 L-body
A	inlet or outlet	G½"	G¾"	G1"	G1¼"
B	outlet or inlet	G½"	G¾"	G1"	G1¼"
X1	external pilot port	G¼"			
Y1	external drain [1]	G¼"			

[1] With VV01 only

D4S UK.indd CM 17.04.15

D4S with VV01

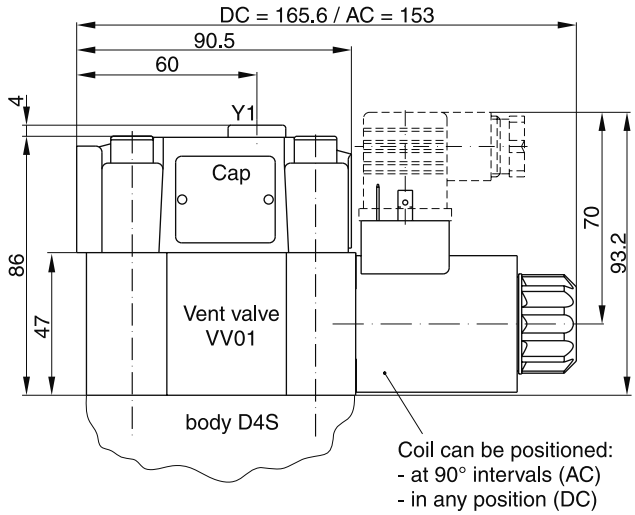

Seal kits	
NBR	**FPM**
DC solenoid	
S56-40609-0	S56-40609-5
AC solenoid	
S26-35237-0	S26-35237-5

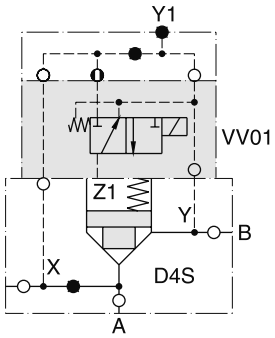

with manual override | without manual override

D4S..-.....09/10
Solenoid energized:
D4S blocked
Solenoid deenergized:
Flow from A-B or B-A

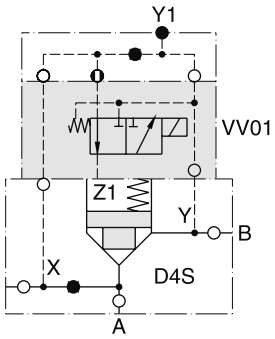

with manual override | without manual override

D4S..-.....11/12
Solenoid energized:
Flow from A-B or B-A
Solenoid deenergized:
D4S blocked

10

D4S position control

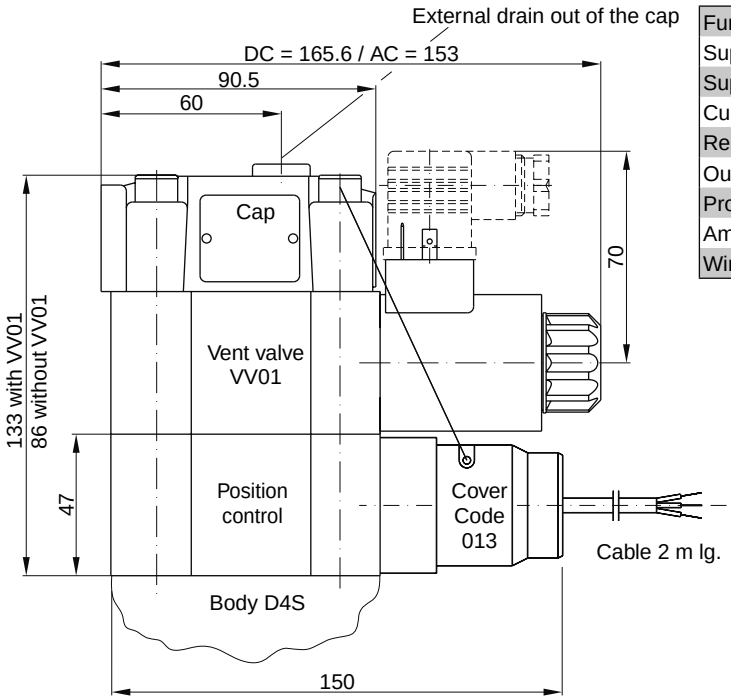

Function		PNP, contact
Supply voltage (Us)	[VDC]	10...30
Supply voltage ripple	[%]	≤ 10
Current consumption	[mA]	max. 8
Residual voltage L-signal	[V]	Us - 2.2 at I_{max}
Output current (I)	[mA]	≤ 200
Protection class		IP67
Ambient temperature	[C°]	-25...+70
Wire cross section	[mm²]	3 x 0.5

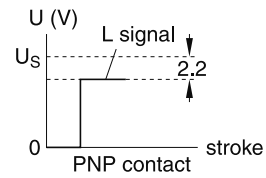

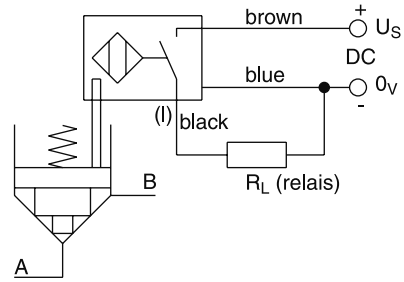

Position control by proximity switch (incl. amplifier)

Valve open: proximity switch activated.

This proximity switch is pressure proof and has no wearing parts.

Note

Position control for D4S06 and D4S10 only.

D4S stroke limiter

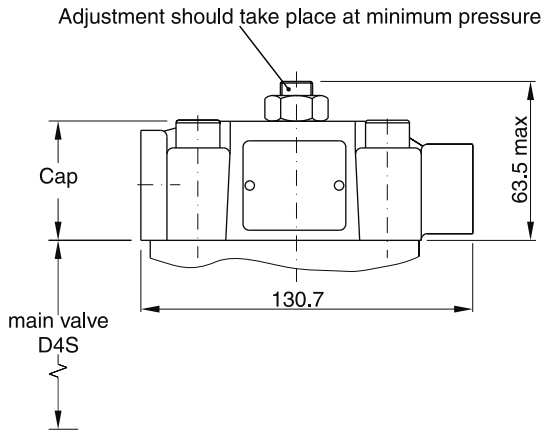

Example: D4S$^{06}_{10}$-.233B.

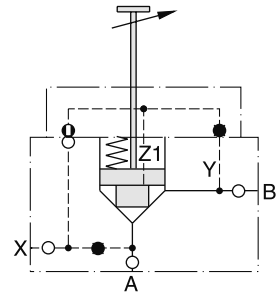

Note:

Stroke limiter not for use with D4S03, VV01, shuttle valve and positon control.

D4S direct operated

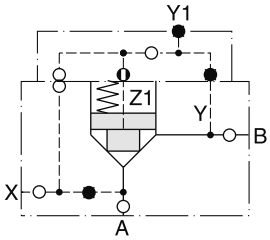

D4S..-.21
Pilot oil X = external

D4S with solenoid valve VV01

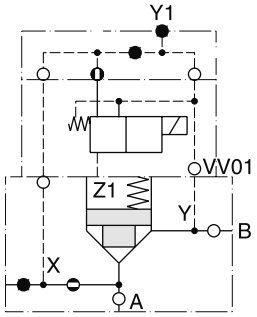

D4S..-.16... 09 10 11 12 with VV01
Pilot oil X = internal from A
Drain Y = internal to B

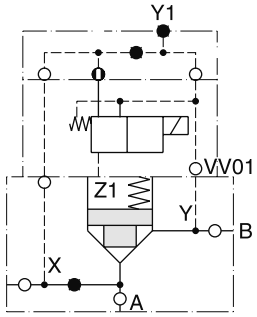

D4S..-.26... 09 10 11 12 with VV01
Pilot oil X = external
Drain Y = internal to B

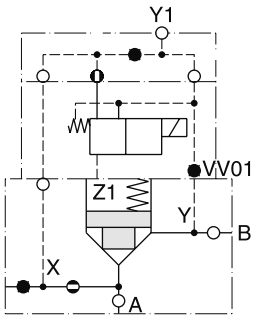

D4S..-.12... 09 10 11 12 with VV01
Pilot oil X = internal from A
Drain Y1 = external out of cap

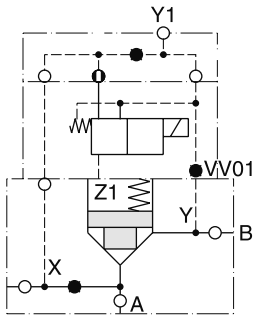

D4S..-.22... 09 10 11 12 with VV01
Pilot oil X = external
Drain Y1 = external out of cap

D4S with position control

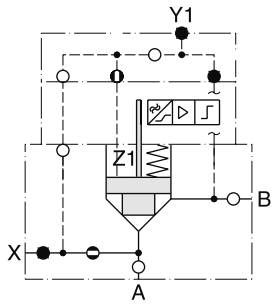

D4S..-.113A.BA
(with position control)

Pilot oil X = intern from A

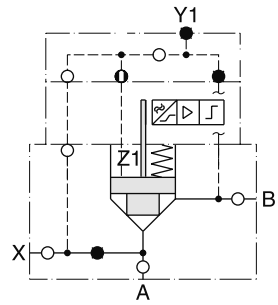

D4S..-.213A.BA
(with position control)

Pilot oil X = external

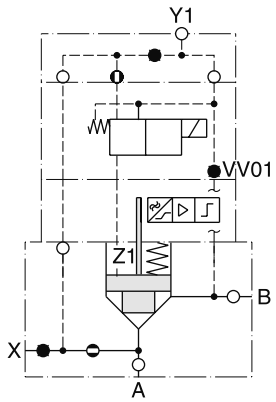

D4S..-.123A. BC / BE } with position control and VV01

Pilot oil X = intern from A
Drain Y1 = external out of cap

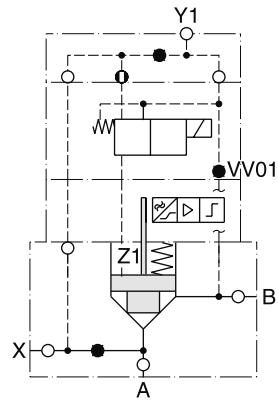

D4S..-.223A. BC / BE } with position control and VV01

Pilot oil X = external
Drain Y1 = external out of cap

10

D4S with stroke limiter

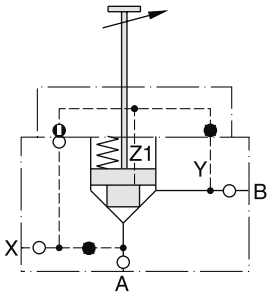

D4S..-.233B. with stroke limiter
Pilot oil X = external
(Note: for D4S06 and D4S10 only)

Manatrol needle valve, optional with 30° poppet, V-notch, or rectangular slot. The form of the throttle opening influences the accuracy of the flow setting, which depends on pressure and viscosity. The needle is made of stainless steel and corresponds to a ring gap in the valve body.

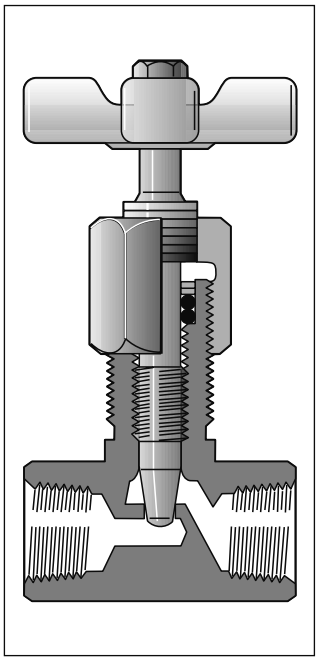

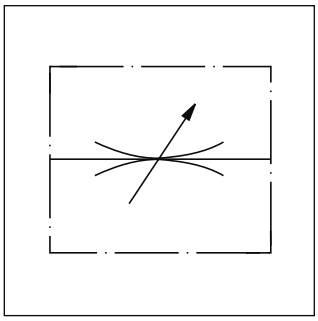

Δp/Q curves

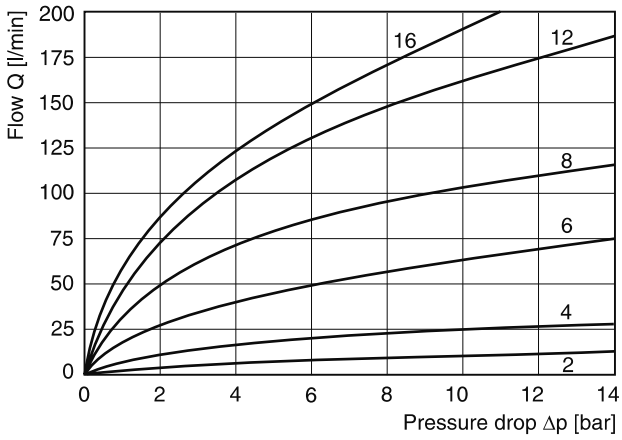

All characteristic curves measured with HLP46 at 50 °C.

$$\text{Flow rate } Q\ [l/min] = Kv \cdot \sqrt{\frac{\Delta p}{\gamma}}$$

Kv	from the table
Δp [bar]	
γ [kg/dm³]	= specific weight of the medium
(γ for mineral oil	= 0.85 - 0.9)

Ordering code

Thread type	Needle valve	Size and design	Body	Needle	Seal
	MV				

Code	Thread
omit	NPTF
9	**BSPP**

Straight way valve code	Size	Angle valve code
200	**1/8**	**261**
400	**1/4**	**461**
600	**3/8**	**661**
800	**1/2**	**861**
1200	**3/4**	**1261**
1600	**1**	**—**

[1] Not for models MV 1200/1600 and design „61"
[2] Only for size 400

Code	Seal
omit	**NBR**
V	FPM

Code	Needle
omit	**Standard with 30° taper**
2 [2]	Fine due to V-notch
3 [2]	Micro-fine due to rect. slot

Code	Body
S	**Steel**
B [1]	Brass

Bold letters =
Short-term availability

Technical data

Size	Max. pressure [bar] steel	Max. pressure [bar] brass	Flow [l/min] Δp 10 bar	Max. cross.sect. [cm²] Δp 10 bar	Kv factor valve open	Weight [kg]
200	350	140	11	0.07	3.5	0.13
400	350	140	25	0.14	6.3	0.31
600	350	140	65	0.37	18.5	0.54
800	350	140	105	0.55	27.5	0.95
1200	350	–	160	0.90	45.7	1.58
1600	210	–	190	1.10	54.6	1.9

Size and needle type	
200-2	7
200-3	2
400-2	11

MV-9MV UK.indd CM 18.02.15

MV*00 valve with connecting thread in-line

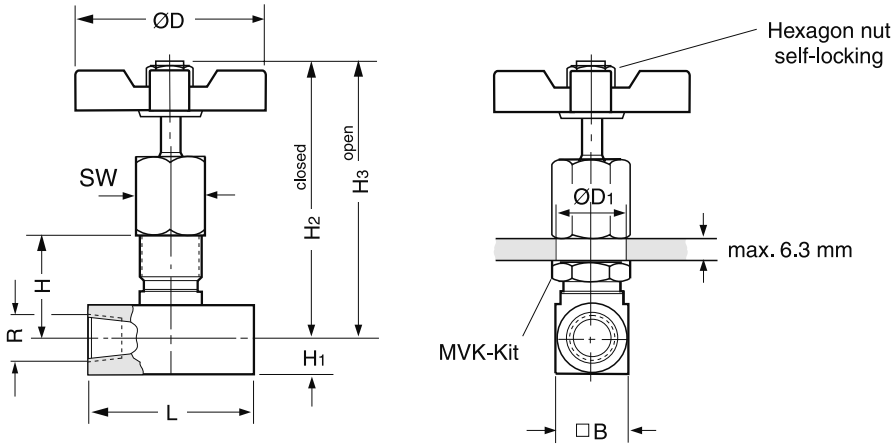

Size	R*	H	H3	H2	H1	B	ØD1	L	ØD	SW	MVK sets
2	⅛	24	69	64	8	16	15	38	45	15.7	MVK 2
4	¼	33	86	81	10.5	21	20	51	51	22.1	MVK 4
6	⅜	38	108	100	13	26	23	64	64	25.4	MVK 6
8	½	51	130	117	16	32	29	67	83	31.8	MVK 8
12	¾	54	142	128	19	38	36	83	98	41.2	MVK 12
16	1	60	147	133	22.5	45	36	108	98	41.2	MVK 16

MV*61 angle valve with connections at 90° angle

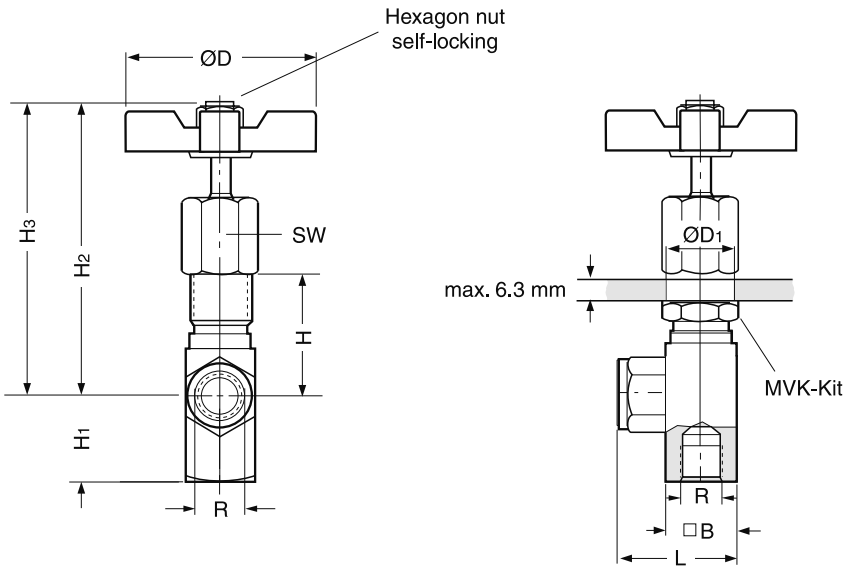

Size	R*	H	H3	H2	H1	B	ØD1	L	ØD	SW
2	⅛	27	72	67	20.6	16	15	27	45	15.7
4	¼	36	90	85	27.7	21	20	38	51	22.1
6	⅜	42	111	103	34.8	26	23	45	64	25.4
8	½	55	134	121	42.7	32	29	53	83	31.8
12	¾	59	147	133	41.1	38	36	64	98	41.2

* Pipe thread G or NPTF

Manatrol stop and throttle valves with 2-stage needle cone. Fine adjustment for the first stage can be achieved with 3 rotations of the adjustment knob. The second stage with normal throttle characteristics is achieved with 3 further rotations. A cylindrical needle with a rectangular slot is provided to reduce the viscosity effect for sizes 200 up to 600. The flow is dependent on pressure and viscosity.

$$\text{Flow rate } Q\ [l/min] = Kv \cdot \sqrt{\frac{\Delta p}{\gamma}}$$

Kv from the table
Δp [bar]
γ [kg/dm³] = specific weight of the medium
(γ for mineral oil = 0.85 - 0.9)

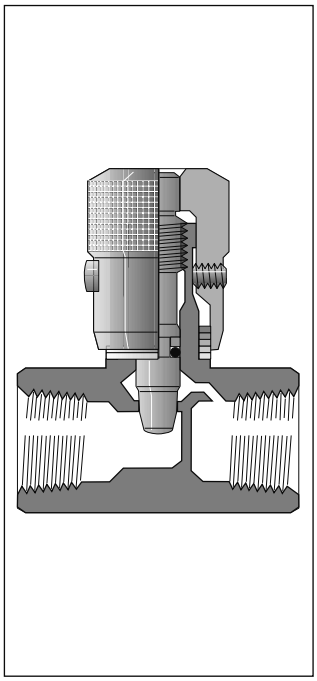

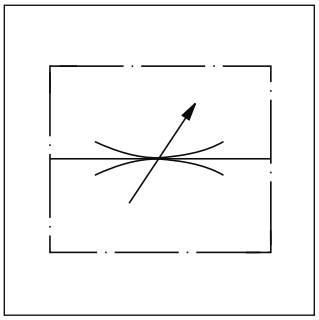

Specifications

Operating temperature	-40 °C to +121 °C

Ordering code

[ ] Thread type — [N] Needle valve — [ ] Thread size — [ ] Body — [ ] Needle — [ ] Clamping screw — [ ] Seal

Code	Thread
omit	NPTF
9	**BSPP**

Code	Size
200	**1/8**
400	**1/4**
600	**3/8**
800	**1/2**
1200	**3/4**
1600	1

Code	Body
S	**Steel**
B	Brass

Code	Seal
omit	**NBR**
V	FPM

Code	Clamping screw
omit	**Hexagon socket**
F	With knurled knob
T	Tamper-proof

Code	Needle
omit	**Standard 2-stage needle**
4 [1)]	Micro-fine hollow needle with slot

Bold letters =
Short-term availability

[1)] Only for sizes 200 to 600

10

Technical data (only for standard 2 stage needle)

Size	Pressure [bar]		Flow [l/min]	Max. cross section	Kv factor valve	Weight [kg]
	Steel	Brass				
200	350	140	11	0.066	3.3	0.15
400	350	140	25	0.13	6.3	0.22
600	350	140	40	0.22	11.2	0.6
800	350	140	50	0.28	13.9	0.63
1200	350	140	120	0.70	35.4	1.04
1600	210	35	250	1.48	75	2.13

N-9N UK.indd CM 10.09.14

p/Q curves

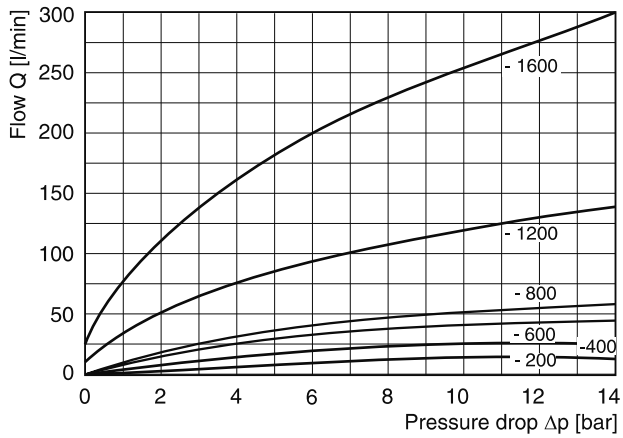

All characteristic curves measured with HLP46 at 50 °C.

Dimensions

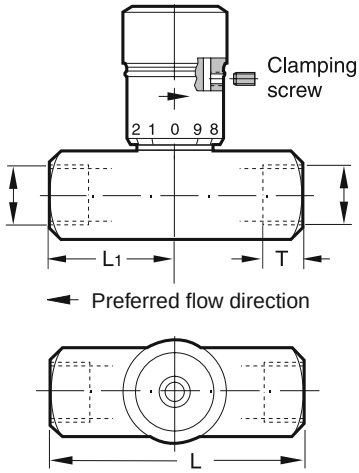

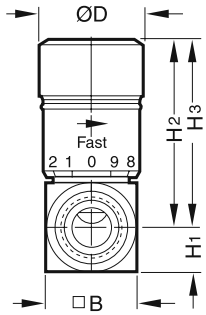

H_2 = closed
H_3 = open

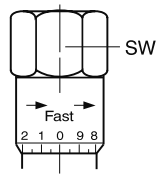

Hexagon adjusting knob, standard for size 1600

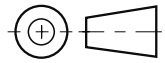

Size	R* Threads	H3	H2	H1	B	L1	L	ØD	SW
200	⅛	39	35	8	16	16	38	19	–
400	¼	46	40	10.5	21	25	51	21	–
600	⅜	55	49	13	26	32	64	25	–
800	½	69	61	16	32	33	67	30	–
1200	¾	86	71	19	38	41	83	35	–
1600	1	124	107	22.5	45	54	108	–	47.8

* G or NPTF

Manatrol throttle check valves of series F with fine adjustment of the flow rate for a defined flow direction. The built-in check valve allows free flow in the counter direction with low flow resistance. A 2-stage needle provides very exact setting of smaller flow rates with the first three rotations of the adjustment knob. After 3 more rotations, the valve is completely open. The valve setting can be locked with the locking screw.

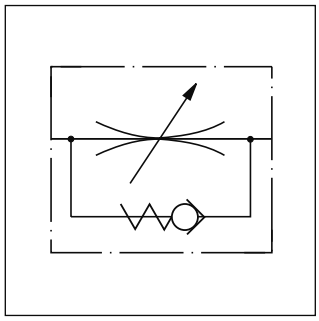

$$\text{Flow rate } Q\ [l/min] = Kv \cdot \sqrt{\frac{\Delta p}{\gamma}}$$

Kv from the table
Δp [bar]
γ [kg/dm³] = specific weight of the medium
(γ for mineral oil = 0.85 - 0.9)

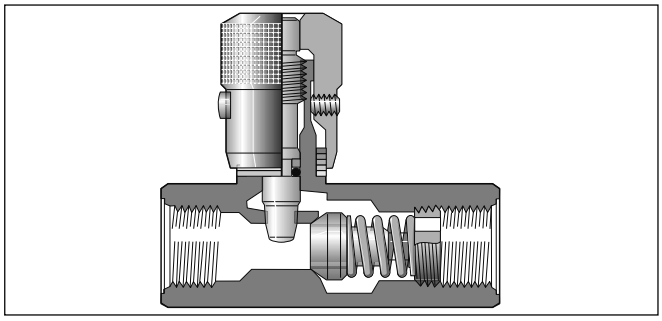

Specifications

Return check poppet Nominal cracking pressure	0.4 bar
Operating temperature	-40 °C to +121 °C

Ordering code

[ ]	**F**	[ ]	[ ]	[ ]	[ ]	[ ]
Thread type	**Throttle check valve**	**Thread size**	**Body**	**Needle**	**Clamping screw**	**Seal**

Code	Thread
omit	NPTF
9	**BSPP**

Code	Size
200	**1/8**
400	**1/4**
600	**3/8**
800	**1/2**
1200	**3/4**
1600	**1**
2000	1¼
2400	1½
3200	2

Code	Seal
omit	**NBR**
V	FPM

Code	Clamping screw
omit	**Hexagon socket**
F	With knurled knob
T	Tamper-proof

Code	Needle
omit	**Standard 2-stage needle**
4 [2]	Micro-fine hollow needle with slot

Code	Body
S	**Steel**
B [1]	Brass

[1] Only for sizes 200 to 1600
[2] Only for sizes 200 to 600

Bold letters =
Short-term availability

10

Technical data

Size	Pressure [bar]		Max. flow [l/min Δp10bar]	Throttle surface [cm²]	Throttle v. open Kv factor	Weight [kg]	
	Steel	Brass				Steel	Brass
200	350	140	11	0.066	3.3	0.13	0.13
400	350	140	25	0.13	6.3	0.23	0.23
600	350	140	40	0.22	11.2	0.31	0.31
800	350	140	50	0.28	14	0.67	0.68
1200	210	140	120	0.70	35.4	1.17	1.18
1600	210	35	250	1.48	75	2.31	2.32
2000	210	–	250	1.48	75	3.67	–
2400	210	–	250	1.48	75	4.62	–
3200	210	–	250	1.48	75	7.78	–

F-9F UK.indd CM 11.02.15

Controlled flow vs. pressure drop needle fully open

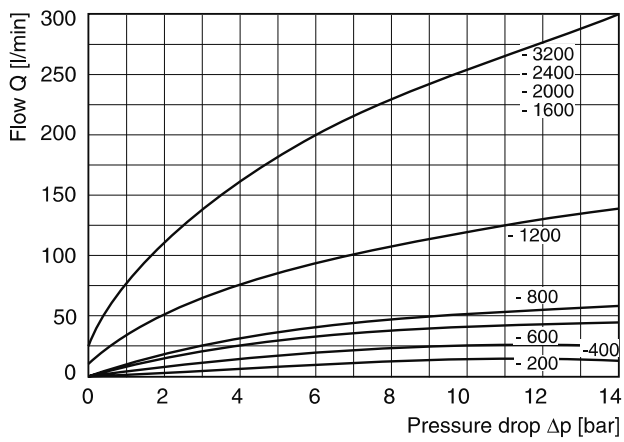

Free flow vs. pressure drop needle fully open

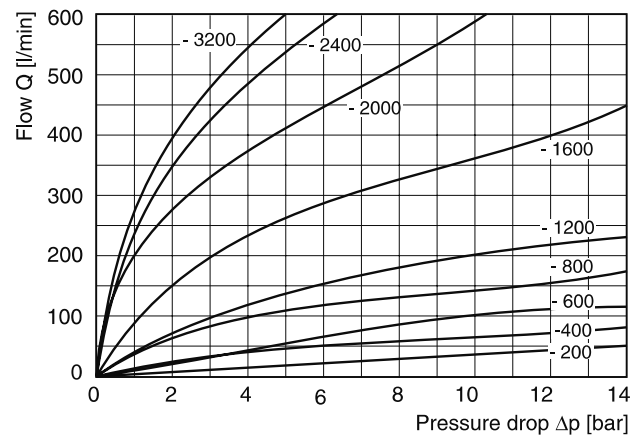

All characteristic curves measured with HLP46 at 50 °C.

Dimensions

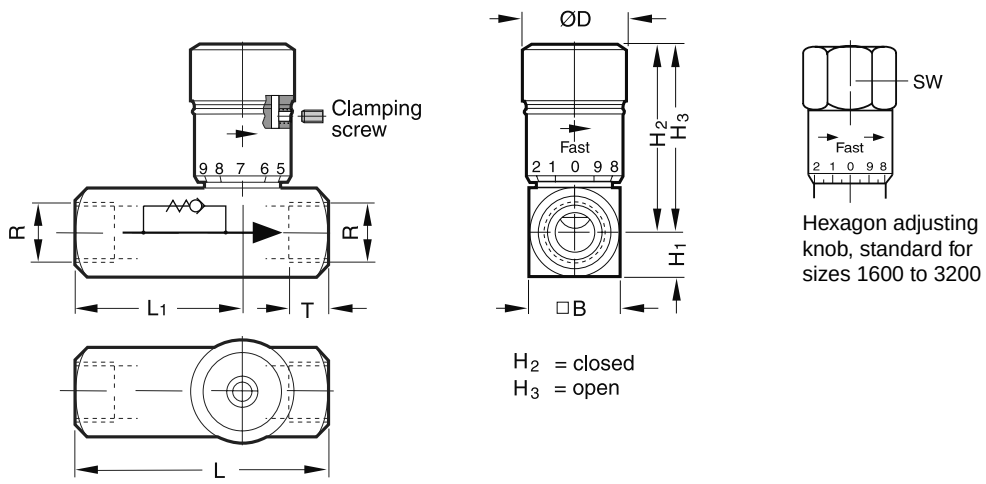

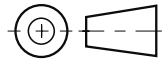

Size	R*	H3	H2	H1	B	L1	L	ØD	SW	T
200	⅛	39	35	8	16	36	51	19	-	9
400	¼	46	40	10.5	21	43	67	21	-	13
600	⅜	55	49	13	26	45	70	25	-	13
800	½	69	61	16	32	57	87	30	-	16
1200	¾	86	71	19	38	65	99	35	-	17
1600	1	124	107	22.5	45	83	127	-	47.8	20
2000	1 ¼	130	114	29	58	99	143	-	-	21.5
2400	1 ½	137	120	35	70	114	143	-	-	23.5
3200	2	146	130	44.5	89	134	165	-	-	25

* Pipe thread G or NPTF

Manatrol 2 way flow control valves for pressure compensated regulation of the flow rate. As a consequence of pressure changes, the set value can vary by ± 5 % within the tolerance range. Viscosity changes have the same effect and must be observed.

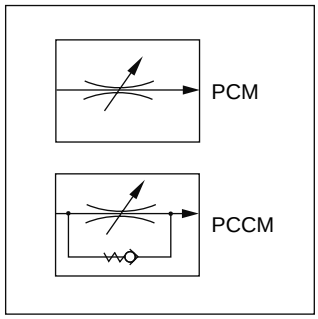

Technical data

Size	Max. press. [bar]	Flow control		Check valve		Weight [kg]
		Q* [l/min]	Δp [bar]	Q_{max} [l/min]	Δp [bar]	
400	210	1 - 10	7	20	3	0.82
600	210	2 - 25	7	30	3	1.05
800	210	6 - 60	11	75	8	1.68
1200	210	10 - 100	11	130	8	3.64
1600	210	19 - 190	11	250	10	6.59

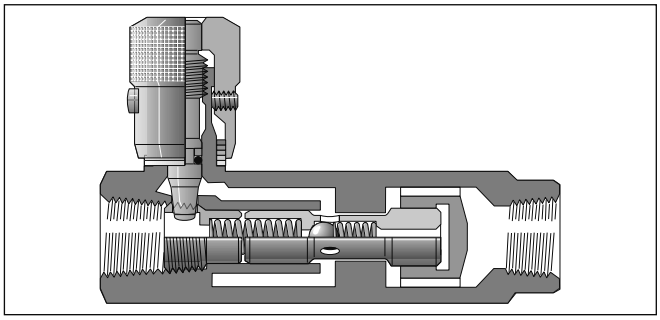

Ordering code

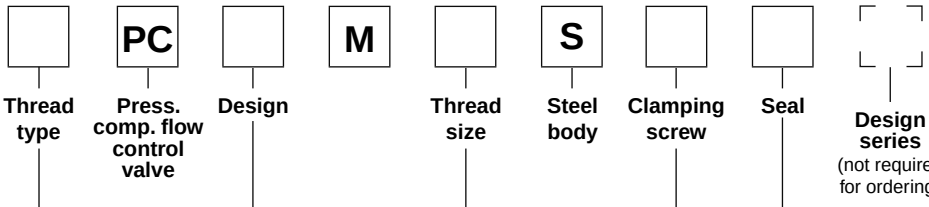

Code	Thread
omit	NPTF
9	**BSPP**

Code	Design
omit	**Without check valve**
C	With check valve

Code	Size
400	**1/4**
600	**3/8**
800	**1/2**
1200	**3/4**
1600	**1**

Code	Seal
omit	**NBR**
V	FPM

Code	Clamping screw
omit	**Hexagon socket**
F	With knurled knob
T [1)]	Tamper-proof

Bold letters =
Short-term availability

* Min. and max. flow rate
[1)] Only for size 400 to 1200

10

Δp/Q curves

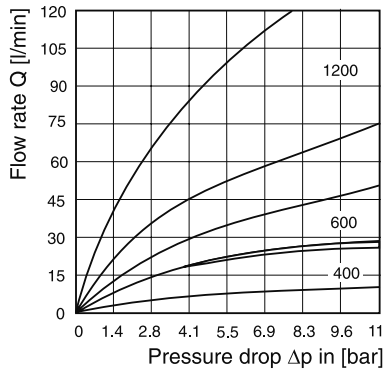

Sizes 400, 600 and 1200: Pressure drop Δp for flow through check valve in range Q_{max} / Q_{min} with each size

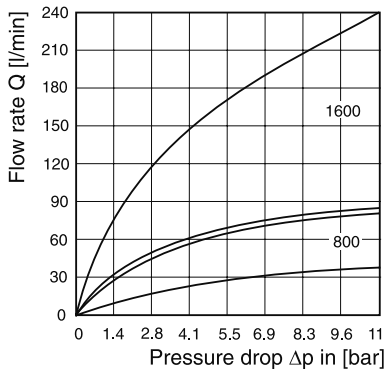

Sizes 800 and 1600: Pressure drop Δp for flow through check valve in range Q_{max} / Q_{min} with each size

Size 400 - 1600 p/Q control characteristic

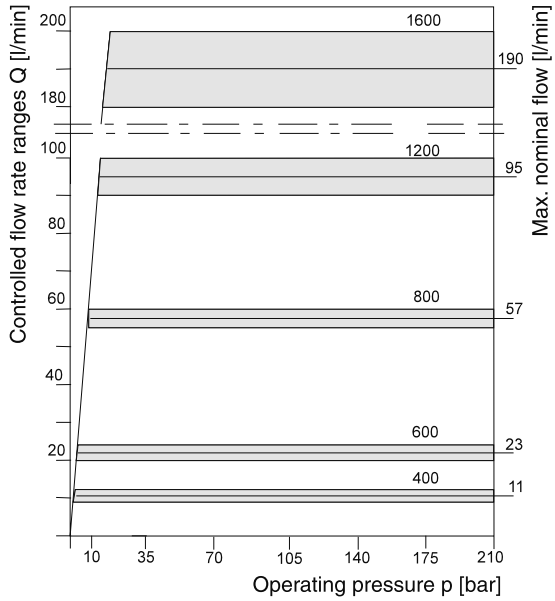

All characteristic curves measured with HLP46 at 50 °C.

Dimensions

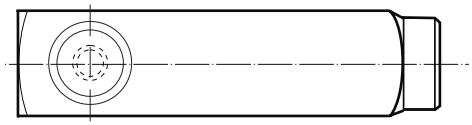

Direction for controlled flow

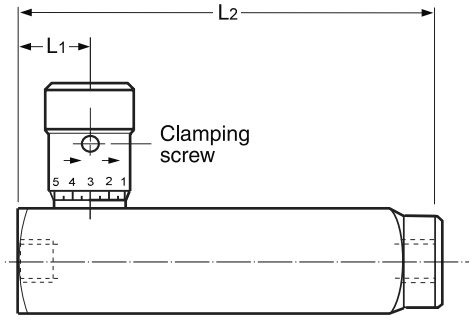

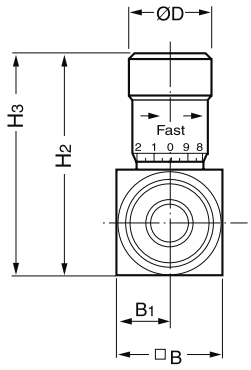

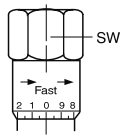

Hexagon adjusting knob, standard for size 1600

H2 = closed
H3 = open

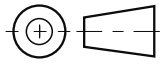

Size	R*	H3	H2	B	L1	B1	L2	ØD	SW
400	¼	69	64	35	16	18	92	21	-
600	⅜	80	74	38	18	19	106	25	-
800	½	103	95	44	22	22	125	30	-
1200	¾	128	116	57	28	29	149	35	-
1600	1	175	158	70	33	35	176	-	47.8

* Pipe thread G or NPTF

PCM-9PCM UK.indd CM 18.02.15

Manatrol check valves of series C for pipe mounting provide free flow in one direction and block flow in the counter direction. Depending on material specification, these valves are suited for use in hydraulic and pneumatic systems.

Specific poppets and poppet guides ensure reliable functional integrity even at high flow rates and/or pulsations.

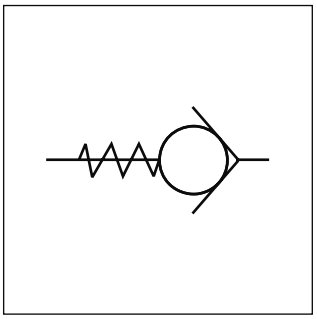

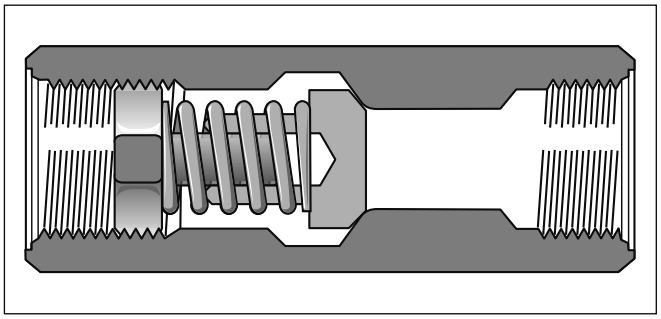

Technical data

Size			200	400	600	800	1200	1600
Max. operating pressure	steel	[bar]	350	350	350	350	350	210
	brass	[bar]	140	140	140	140	140	34
Pressure drop Δp		[bar]	10	10	10	10	1	1
Flow Q		[l/min]	40	65	110	155	112	160

Ordering code

	C			
Thread type	Pipe mounting	Port size	Body	Opening pressure

Code	Thread
omit	NPTF
9	**BSPP**

Code	Size
200	1/8
400	**1/4**
600	**3/8**
800	**1/2**
1200	**3/4**
1600	**1**

Code	Pressure [bar]
omit	**0.35**
65	4.5

Code	Body
S	**Steel**
B	Brass

Bold letters =
Short-term availability

C-9C UK.indd CM 02.09.13

Δp/Q performance curves

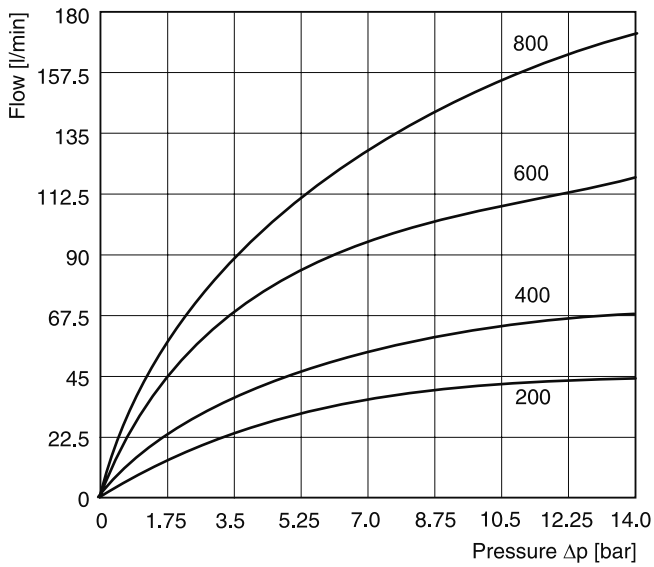

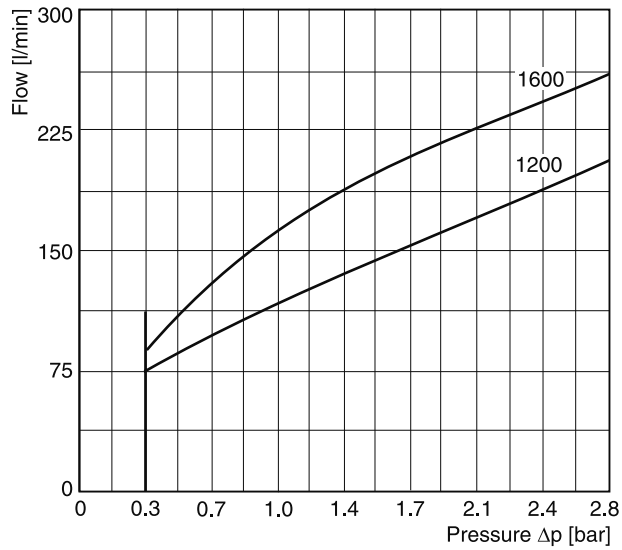

All characteristic curves measured with HLP46 at 50 °C.

Dimensions

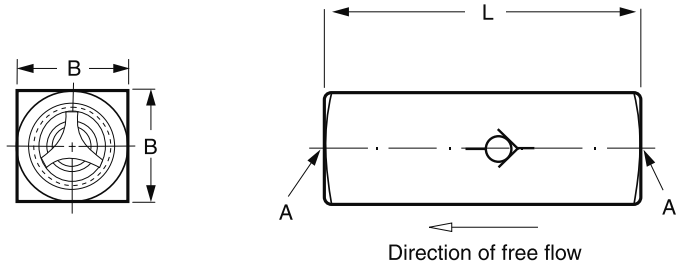

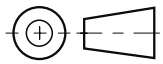

Size	Threaded connection R*		Dimensions [mm]		Weight [kg]
	G thread	NPTF thread	B	L	
C 200	R ⅛"	⅛-27 NPTF	16	51	0.05
C 400	R ¼"	¼-18 NPTF	21	66	0.2
C 600	R ⅜"	⅜-18 NPTF	25	70	0.2
C 800	R ½"	½-14 NPTF	32	87	0.6
C 1200	R ¾"	¾-14 NPTF	38	99	0.9
C 1600	R 1"	1-11-½ NPTF	45	127	1.5

* For alternative thread design, see ordering code.

Pilot operated check valves series CP allow free flow in one direction (A to B).

The counter direction (B to A) is blocked. By applying pilot pressure, the poppet can be lifted from its seat against the pressure in port B. Thus flow in the counter direction is also possible. There are 1 and 2 stage poppets available with pilot ratios of 1 : 5 and 1 : 40, to suit different operating conditions.

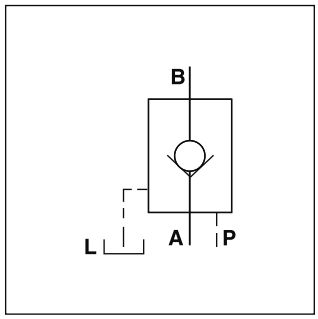

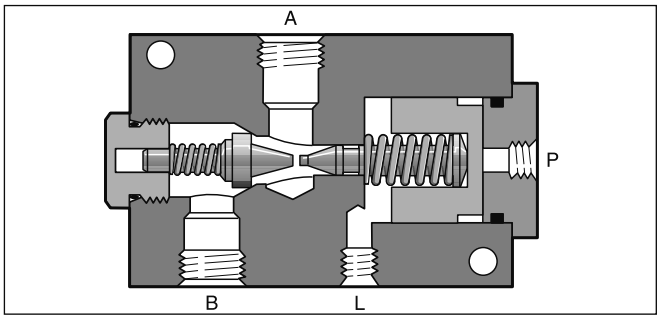

Technical data

Size		600	1200
Max. operating pressure	[bar]	210	210
Max. pilot pressure	[bar]	210	70
Flow Q_{max} at Δp 2.7 bar	[l/min]	30	95
Nominal size		3/8	3/4
Weight	[kg]	4	7

Pilot ratios

Poppet 1 stage

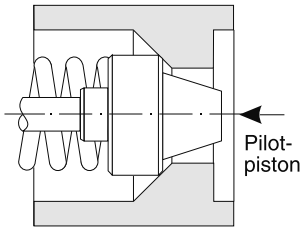

Surface ratio 5 : 1 (pilot spool-poppet surface) for quick response time without decompression.

Poppet 2 stage

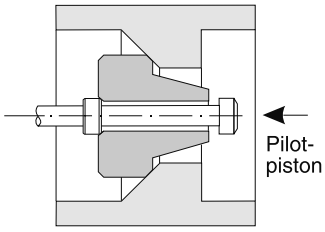

Surface ratio 40 : 1 (pilot spool decompression pin surface) for low shock or oscillation performance from decompression.

Ordering code

	CP		S		M	
Thread type	Check valve, pilot operated	Port size	Steel body	Pilot ratio	Steel poppet	Seal

Code	Thread
omit	NPTF
9	**BSPP**

Code	Size
600	**3/8**
1200	**3/4**

Code	Seal
omit	**NBR**
V	FPM

Code	Pilot ratio	Stage
5	**5 : 1**	**1**
40	40 : 1	2

Bold letters =
Short-term availability

Δp/Q performance curves

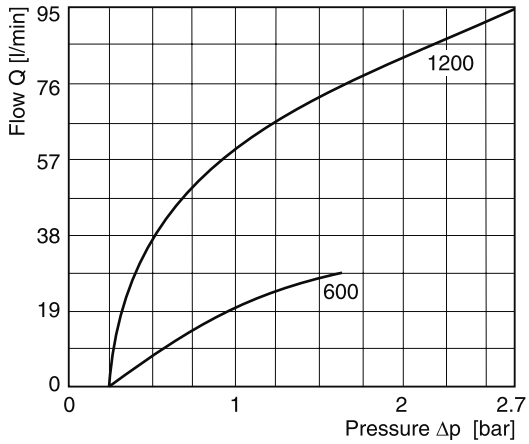

All characteristic curves measured with HLP46 at 50 °C.

Dimensions

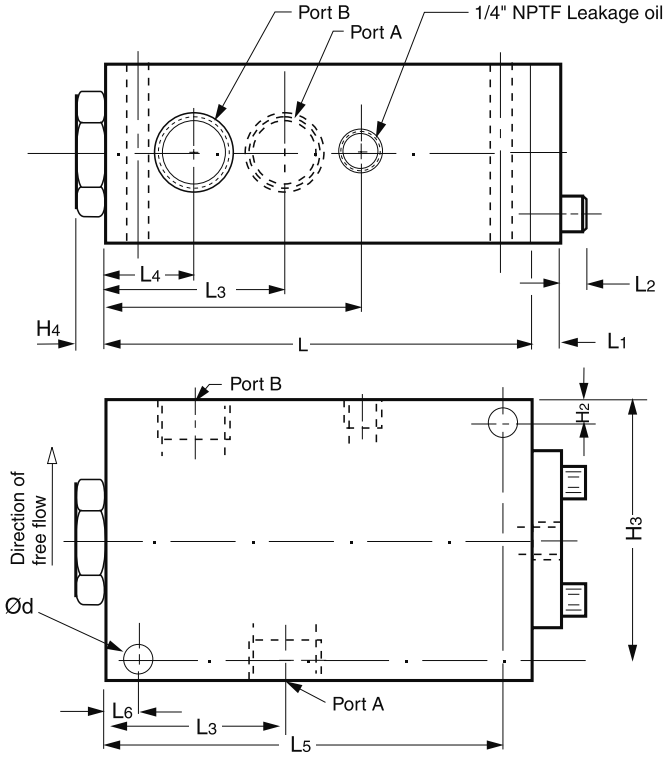

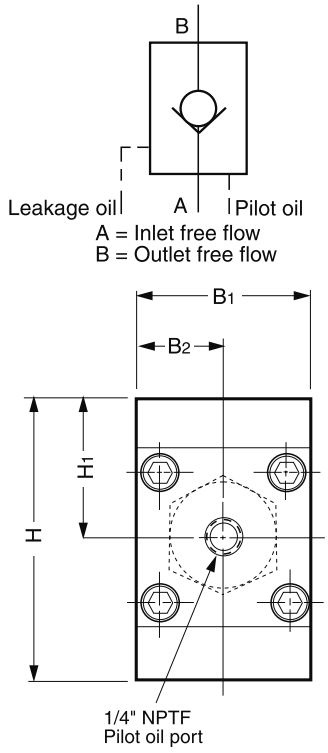

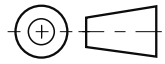

Size	A, B	L_3	B_1	B_2	H_1	H	L_4	L_7	H_4	L	L_1	H_2	H_3	L_6	L_5	Ød	W
9CP600S	G3/8	53.3	50.8	25.4	38.1	76.2	25.4	76.2	10.4	120.7	10.7	9.4	66.5	9.4	111	9.1	-
9CP1200S	G3/4	63.5	63.5	31.8	50.8	101.6	31.8	91.2	10.7	152.4	11.43	11.2	90.4	11.2	141.2	10.7	7.9

Pilot operated check valves series RH allow free flow in one direction (B to A). The counter flow is blocked (A to B). By applying pilot pressure the ball can be lifted from its seat and allow flow from A to B.

Most common use:

- Keeping cylinders leak-free in position, when spool type directional control valves are used
- Return line discharge, when return flow exceeds functional limits of directional control valve at differential cylinders
- As hydraulically activated drain or circulation valve

The valves are available without and with hydraulic pre-discharging.

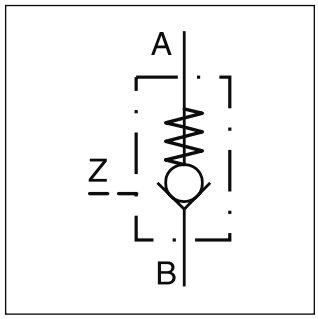

Without pre-discharging

These valves have a ball as valve element, which quickly enables the full flow cross-section proportionally during pilot operation. A metering position in the pilot port dampens the control movement of the pilot spool so that pressure shocks (unloading shocks) are mostly suppressed.

With pre-discharging

For valves with pre-discharging a spherical polished valve spool (seat valve function) is built-in instead of a ball. The additional check valve achieves a pre-opening which provides shock-free unloading of the fluid, especially at high working pressure and large volumes.

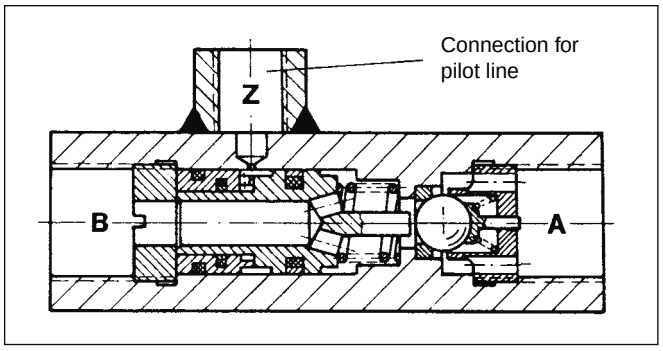

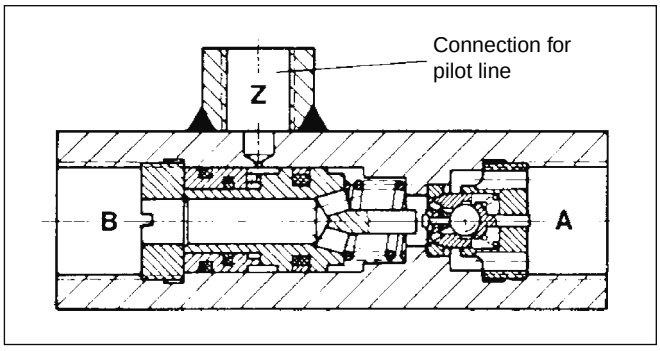

10

Ordering code

RH — **Check valve, hydr. pilot operated**

[ ] — **Flow**

[ ] — **Pre-discharging**

Code	Flow [l/min]
1	15
2	**35**
3	**55**
4	100

Code	Pre-discharging
V [1)]	**with**
omit	**without**

Bold letters =
Short-term availability

[1)] Only for sizes 3 and 4

Technical data

General					
Code	RH	**1**	**2**	**3 / 3V**	**4 / 4V**
Pipe connections	DIN ISO 228/1 A, B DIN ISO 228/1 Z	G ¼ G ¼	G ⅜ G ¼	G ½ G ¼	G ¾ G ¼
Mounting		Freely suspended in the pipeline			
Mounting position		unrestricted			
Ambient temperature	[°C]	-20 ... +60			
$MTTF_D$ value	[years]	150			
Weight	[kg]	0.4	0.4	0.6	1.3
Hydraulic					
Max. operating pressure	[bar]	700	700	500	500
Flow approx.	[l/min]	15	35	55	100
Pilot flow volume	[cm³]	0.15	0.22	0.4	1
Fluid		Hydraulic oil according to DIN 51524			
Fluid temperature	[°C]	-20...+70			
Viscosity	permitted [cSt]/[mm²/s] recommended [cSt]/[mm²/s]	20...400 30...80			

Pilot pressure p_{St} for pilot operation of the main valve
(p_B = 0 bar)

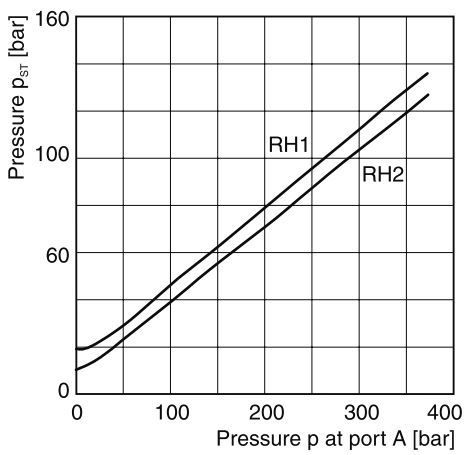

Pilot pressure p_{St} for pilot operation of pre-discharging

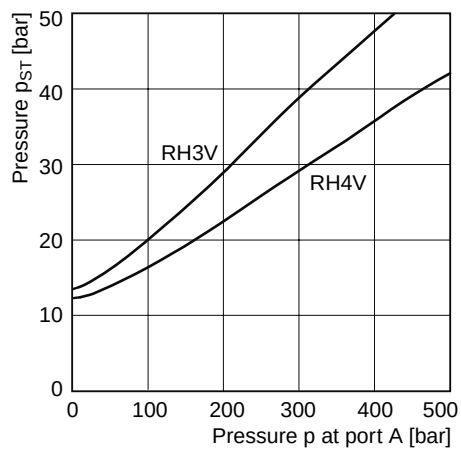

for keeping open		
p_{St}		$p_B + \Delta p + k$
p_B	[bar]	pressure on side B
Δp	[bar]	flow resistance A to B as per $\Delta p/Q$ performance curve
k		10 at RH 1 and RH 2 7 at RH 3 V 8 at RH 4 V

10

Performance Δp/Q curves (valid for flow polarity B to A and pilot operated direction A to B)

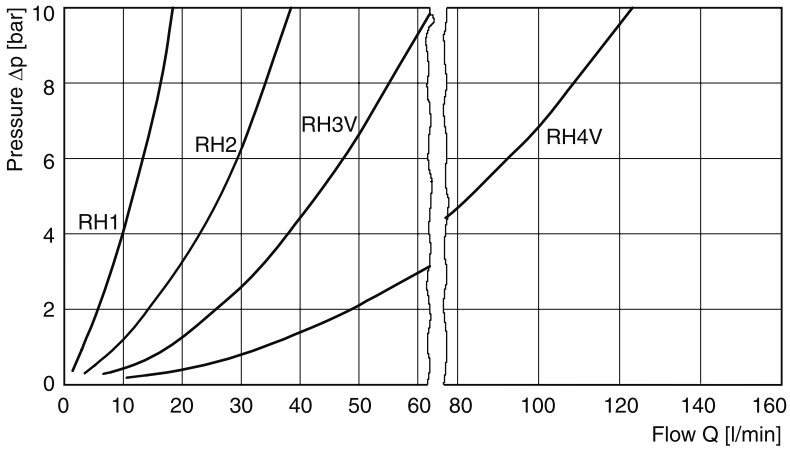

Opening pressure B to A 0.2...0.3 bar

Oil viscosity during the measurement, 60 mm²/s

For viscosities over approx. 500 mm²/s, a strong Δp-increase is to be expected for smaller types (RH1...RH3).

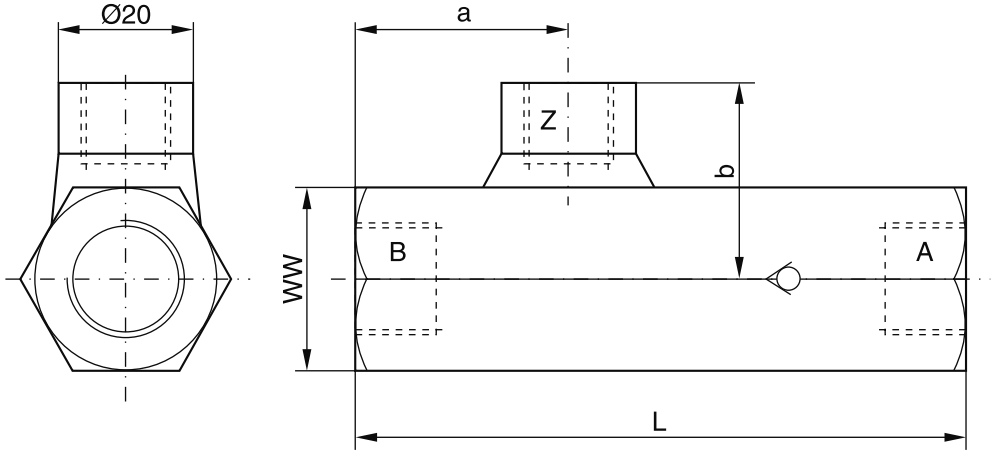

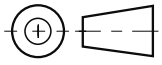

Type	Port [1]		L	a	b	SW
	A, B	Z				
RH 1	G ¼	G ¼	84	31.5	27	24
RH 2	G ⅜	G ¼	90	32	28.5	27
RH 3 V	G ½	G ¼	100	36.5	31	32
RH 4 V	G ¾	G ¼	126	45	35.5	41

[1] As per DIN 228/1, suitable for pipe connections with thread studs form B as per DIN 3852 page 2.

Description	Threaded cable joint	Body colour coding	Order no.
Plug EN 175301-803 [1], design type AF, protection class IP65 Voltages up to 250 V	PG 9	black, B	**5001710**
		grey, A	**5001711**
	PG11	black, B	**5001716**
		grey, A	**5001717**

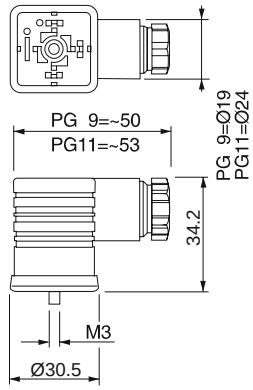

[1] EN 175301-803 (new) corresponding with DIN 43650 (old).

Other plugs on request

Series	Description	For use with																Page
		D*FB, D*1FB	D*FB, D*1FB OBE	D*FC, D*1FC	D*FP, D*1FP	R4V, R6V, R4R	R4V, R6V OBE	RE06M*W	RE06M*T	VMY, VBY	DUR*L	PRPM	TDA, TEA	TDP, TPQ	RE*E*W	RE*E*T	R5V, R5R	
	Amplifiers for proportional valves																	
PWD00	For valves w/o position transducer	•																11-2
PWDXX	For valves with position transducer or valves in closed loop systems	•				•		•		•	•	•	•		•		•	11-6
PCD00	For up to 2 single solenoid valves w/o transducer					•		•		•	•	•	•		•		•	11-10
	Electronics for command signal processing																	
PZD00	Min/max adjustment, 6 command channels, 6+1 ramps		•	•	•		•		•					•		•		11-14
	Axis controller																	
PID00	For position, pressure and speed control in closed loop systems		•	•	•		•		•					•		•		11-18
Compax3F	Multifunctional axis controller for basic and high end applications		•		•									•				11-22
Compax3F Accessories	Terminal strips, cables, PIOs																	11-36
	Accessories																	
EX-M05	Test unit for items with integrated electronics																	11-40

11

Parker electronic modules PWD00A-400 for rail mounting are compact, easy to install and provide time-saving wiring by disconnectable terminals. The digital design of the circuit results in good accuracy and optimal adaption for proportional directional control valves by a comfortable interface program.

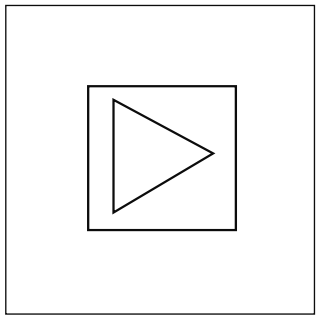

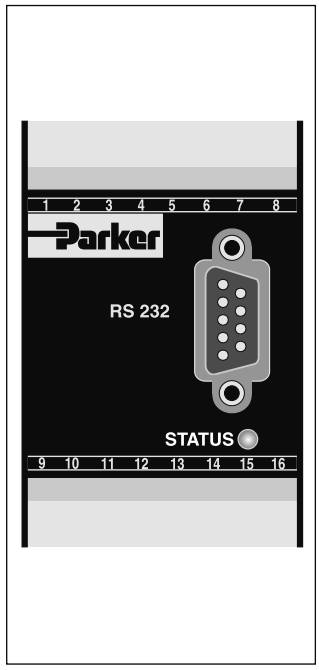

Features

The described electronic unit combines all necessary functions for the optimal operation of proportional directional control valves without position sensor (series D*FB, D*1FB). The most important features are:

- Digital circuit design
- Four parameterizable command channels
- Constant current control
- Differential input stage
- Status output
- Four-quadrant ramp function
- Enable input for solenoid driver
- Status indicator
- Parametering by serial interface RS232C
- Connection by disconnectable terminals
- Compatible to the relevant European EMC standards
- Comfortable PC user software, free of charge: www.parker.com/euro_hcd - see "Support", or directly at www.parker.com/propxd.

Ordering code

PWD	00	A	–	400	–	
Electronic module directional control valves	**Universal**			**Amplifier min/max adjustment accel/decel ramps command input 4 command channels**		**Design series** (not required for ordering)

11

Technical data

General		
Model		Module package for snap-on mounting on EN 50022 rail
Package material		Polycarbonate
Inflammability class		V0 acc. UL 94
Installation position		unrestricted
Ambient temperature range	[°C]	-20...+60
Protection class		IP 20 acc. EN 60529
$MTTF_D$ value	[years]	150
Weight	[g]	160
Electrical		
Duty ratio	[%]	100
Supply voltage	[VDC]	18...30, ripple < 5 % eff., surge free [1)]
Current consumption max.	[A]	2.2
Pre-fusing	[A]	2.5, medium lag
Command signal	[V]	+10...0...-10, ripple < 0.01 % eff., surge free, Ri = 150 kOhm
Input signal resolution	[%]	0.025
Differential input voltage max.	[V]	30 for terminals 5 und 6 against PE (terminal 8)
Enable signal	[V]	0...4.0: Off / 9.0...30: On / Ri = 30 kOhm
Command channel signal	[V]	0...4.0: Off / 9.0...30: On / Ri = 30 kOhm
Status signal	[V]	0...0.5: Off / Us: On / rated max. 15 mA
Adjustment ranges		
Min	[%]	0...50
Max	[%]	50...100
Ramp	[s]	0...32.5
Zero offset	[%]	+100...-100
Current	[A]	0.8 / 1.3 / 1.8 / 2.7 / 3.5
Interface		RS 232C, DSub 9p. male for null modem cable
EMC		EN 50081-2, EN 50082-2
Connection		Screw terminals 0.2...2.5 mm², disconnectable
Cable specification	[mm²] [mm²]	1.5 overall braid shield for supply voltage and solenoids (AWG16) 0.5 overall braid shield for sensor and signal (AWG20)
Cable length	[m]	50

Block diagram

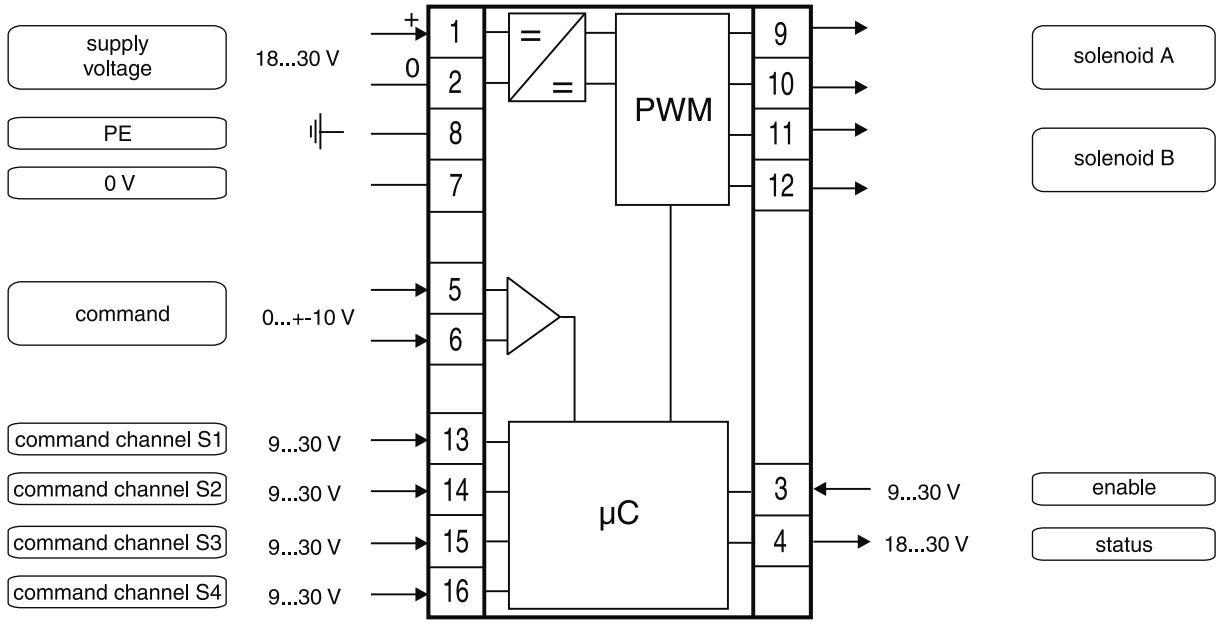

[1)] If solenoids with a nominal voltage of 24 V are connected, the supply voltage has to be raised to 29 V.

Signal flow diagram

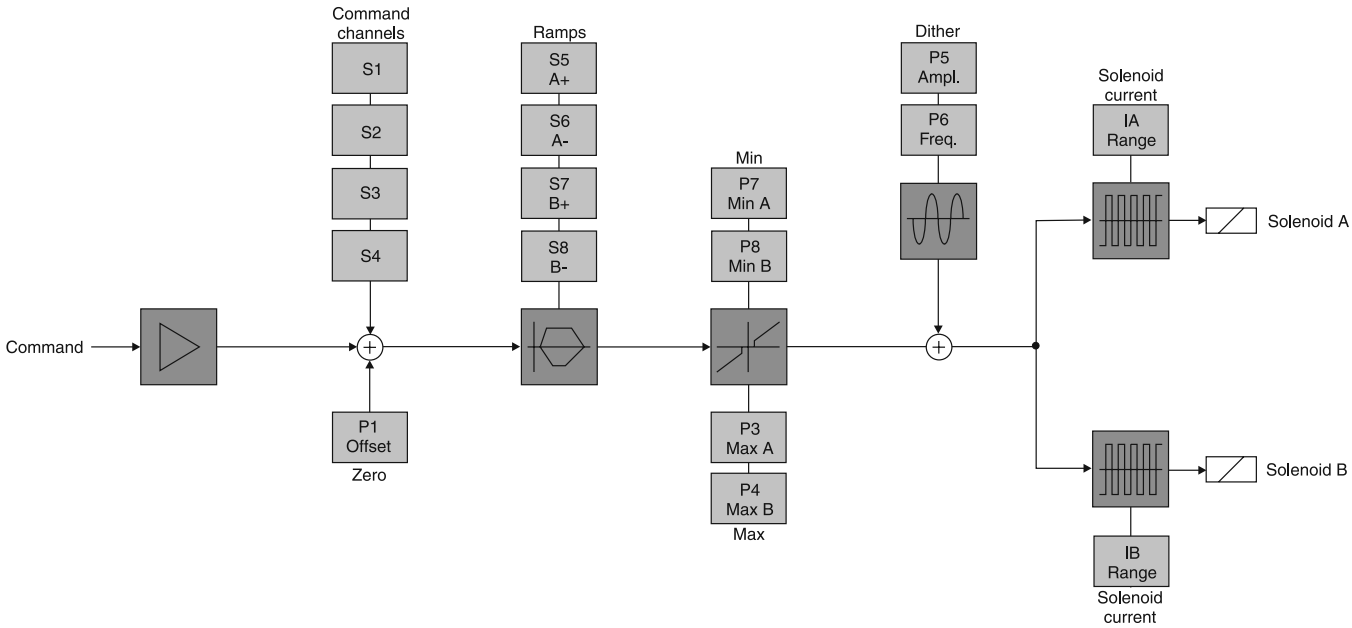

Dimensions

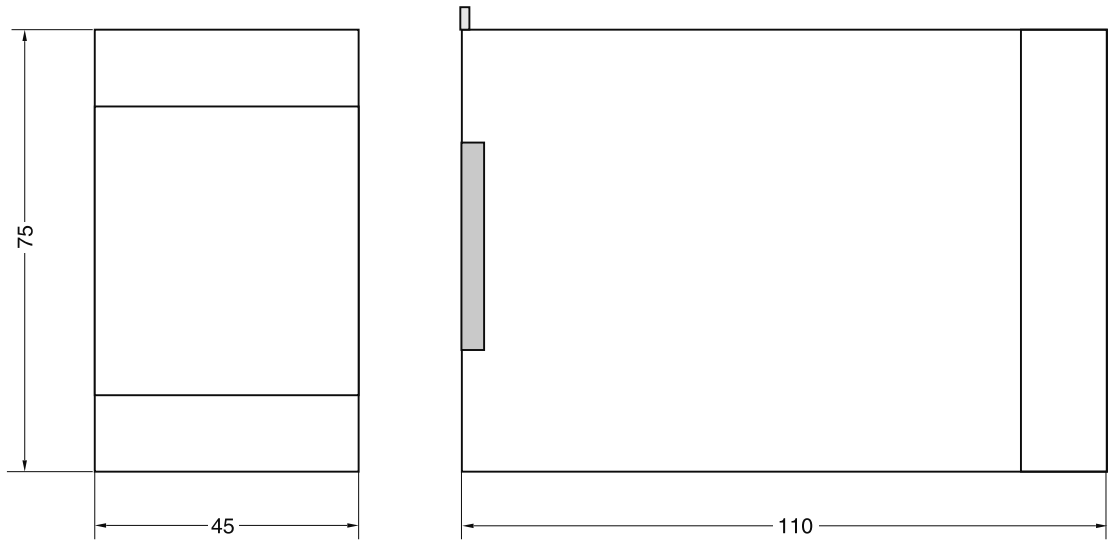

ProPxD interface program

The ProPxD software permits comfortable parameter setting for the module electronics. Via the clearly arranged entry mask the parameters can be monitored and modified. Storage of complete parameter sets is possible as well as printout or record as a text file for further documentation. Stored parameter sets may be loaded anytime and transmitted to other valves. Inside the electronics a nonvolatile memory stores the data with the option for recalling or modification.

The PC software can be downloaded free of charge at www.parker.com/euro_hcd – see page “Support" or directly at www.parker.com/propxd.

Features

- Comfortable editing of all parameters
- Depiction and documentation of parameter sets
- Storage and loading of optimized parameter adjustments
- Executable with all actual Windows® operating systems from Windows® XP upwards
- Plain communication between PC and electronics via serial interface RS232C

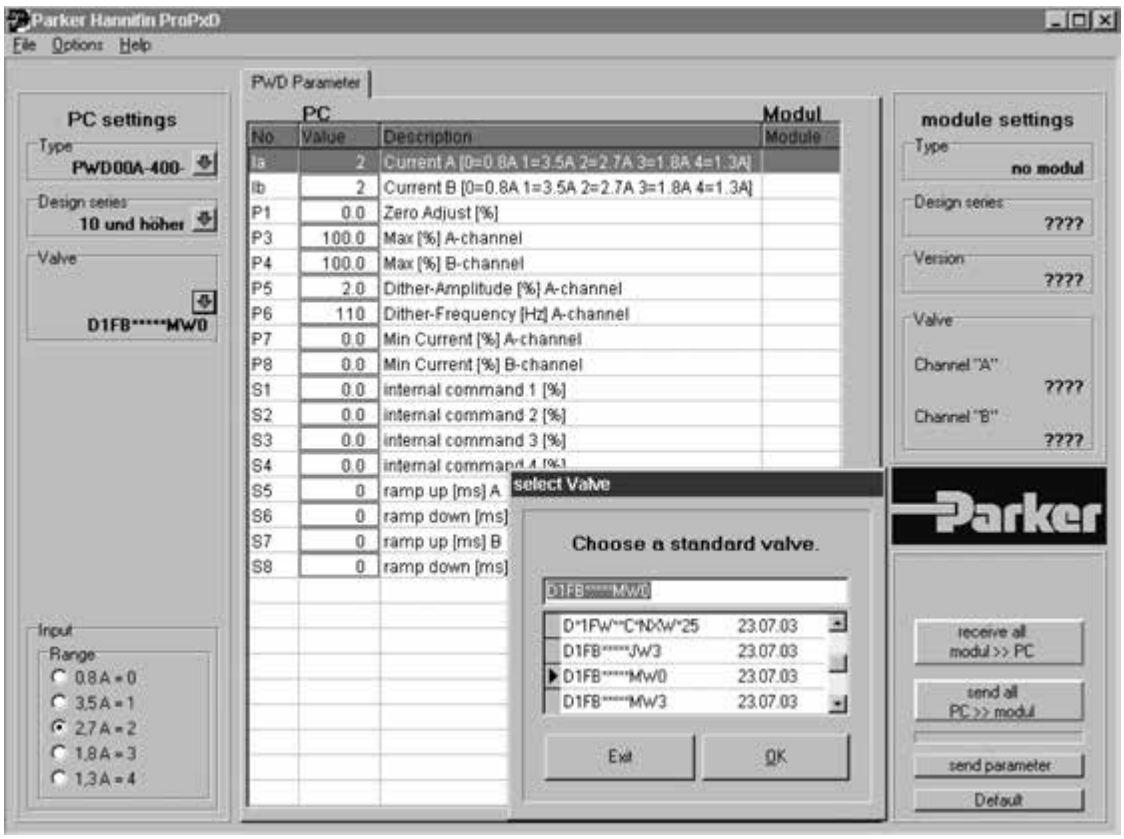

11

Parker electronic modules PWDXXA-40* for rail mounting are compact, easy to install and provide time-saving wiring by disconnectable terminals. The digital design of the circuit results in good accuracy and optimal adaption for proportional directional control valves with position sensor by a comfortable interface program.

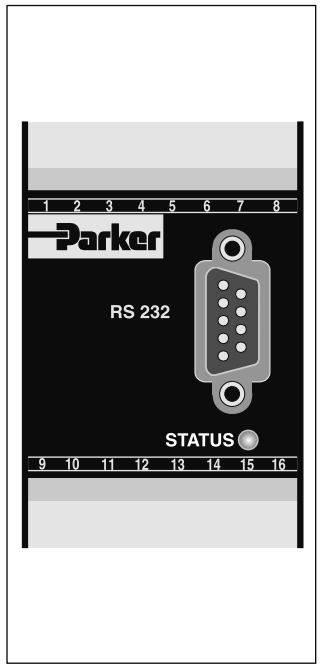

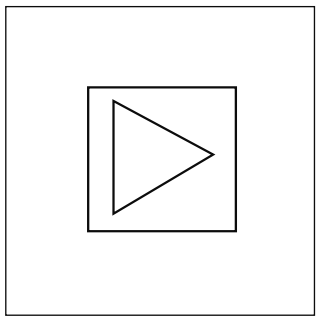

Features

The described electronic unit combines all necessary functions for the optimal operation of proportional directional control valves with position transducer or valves in closed loop systems. The most important features are:

- Digital circuit design
- Parameterizable position control of valve spool
- Constant current control
- Differential input stage with different signal options
- Monitor output for spool stroke
- Four-quadrant ramp function
- Enable input for solenoid driver
- Status indicator
- Parametering by serial interface RS232C
- Connection by disconnectable terminals
- In combination with valves without spool feedback
  - Pressure control with proportional pressure valve and pressure sensor
  - Position control with proportional DC valve and actuator position transducer
- Optional technology function "linearization"
- Comfortable PC user software, free of charge: www.parker.com/euro_hcd - see "Support", or directly at www.parker.com/propxd.

Ordering code

PWD	XX	A	–	40	–	☐	–	☐
Electronic module proportional valves	**Closed loop control universal**			**Amplifier min/max adjustment accel/decel ramps command input**		**Technology function**		**Design series** (not required for ordering)

Code	Function
0	Standard
1	Linearization option

Technical data

General		
Model		Module package for snap-on mounting on EN 50022 rail
Package material		Polycarbonate
Inflammability class		V0 acc. UL 94
Installation position		unrestricted
Ambient temperature range	[°C]	-20...+60
Protection class		IP 20 acc. EN 60529
$MTTF_D$ value	[years]	150
Weight	[g]	160
Electrical		
Duty ratio	[%]	100
Supply voltage	[VDC]	18...30, ripple < 5 % eff., surge free
Switch-on current typ.	[A]	22 for 0.2 ms
Current consumption max.	[A]	2.0
Pre-fusing	[A]	2.5, medium lag
Command signal options	[V] [mA] [mA]	+10...0...-10, ripple <0.01 % eff., surge free, Ri = 100 kOhm +20...0...-20, ripple <0.01 % eff., surge free, Ri = 200 Ohm 4...12...20, ripple <0.01 % eff., surge free, Ri = 200 Ohm <3.6 mA = solenoid output off, >3.8 mA = solenoid output on (acc. NAMUR NE43)
Input signal resolution	[%]	0.025
Differential input voltage max.	[V] [V]	30 for terminals 5 and 6 against PE (terminal 8) 11 for terminals 5 and 6 against 0V (terminal 2)
Sensor supply	[V]	18...30 (Us), max. current <100 mA
Enable signal	[V]	0...2.5: Off / 5...30: On / Ri = 100 kOhm
Status signal	[V]	0...0.5: Off / Us: On / rated max. 15 mA
Monitor signal	[V]	+10...0...-10, rated max. 5 mA, signal resolution 0.4 %
Adjustment ranges Min	[%]	0...50
Max	[%]	50...100
Ramp	[s]	0...32.5
Zero offset	[%]	+100...-100
Current	[A]	1.3 / 2.7 / 3.5
Initial current	[%]	0...25
Interface		RS 232C, DSub 9p. male for null modem cable
EMC		EN 61000-6-2
Connection		Screw terminals 0.2...2.5 mm², disconnectable
Cable specification	[mm²] [mm²]	1.5 overall braid shield for supply voltage and solenoids (AWG16) 0.5 overall braid shield for sensor and signal (AWG20)
Cable length	[m]	50
Options		
Technology function	Code1	Software adjustable transfer function with 10 compensation points for linearization of valve behaviour

Block diagram

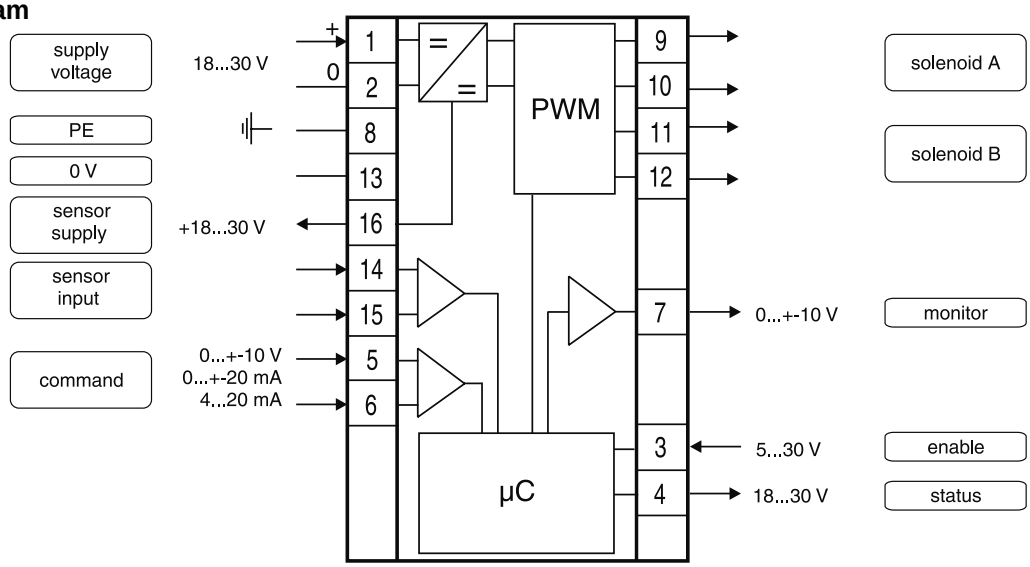

Signal flow diagram

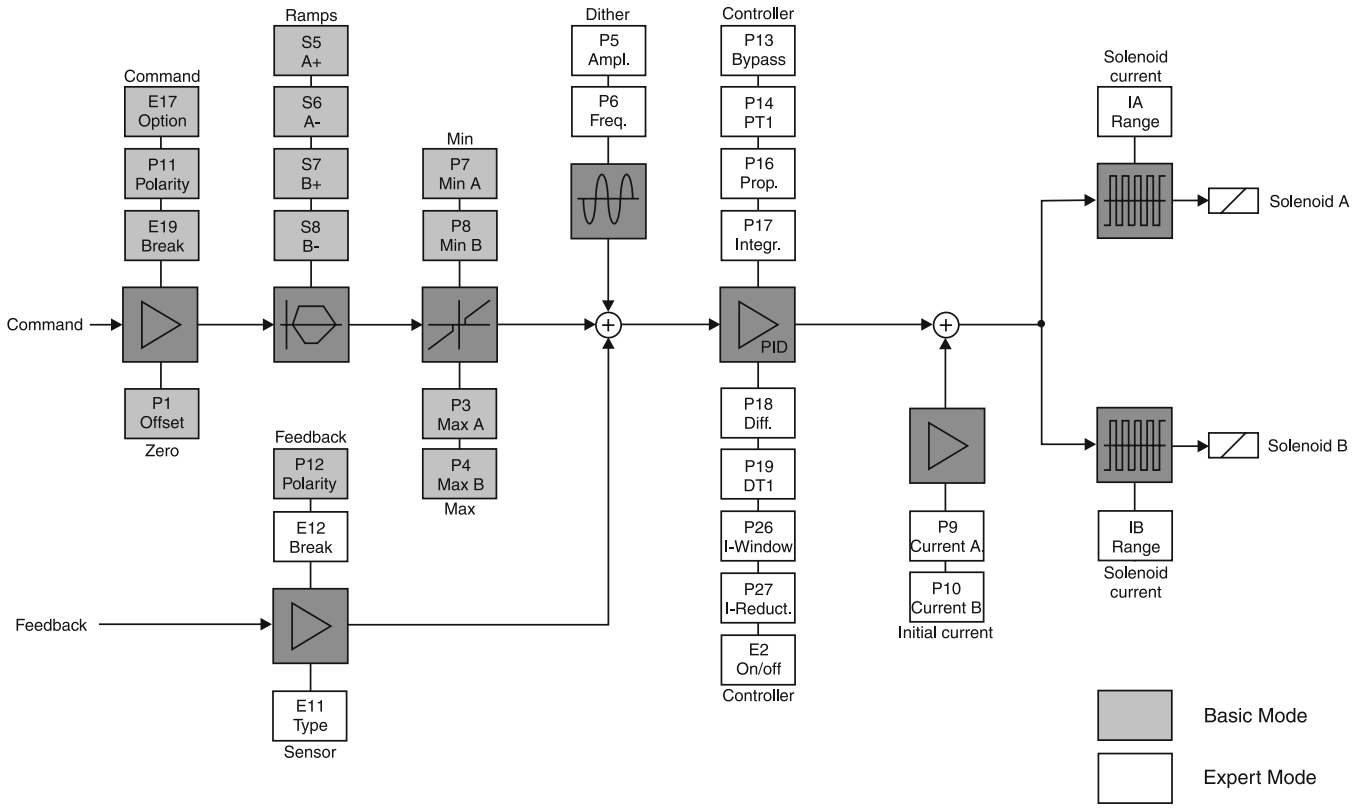

Dimensions

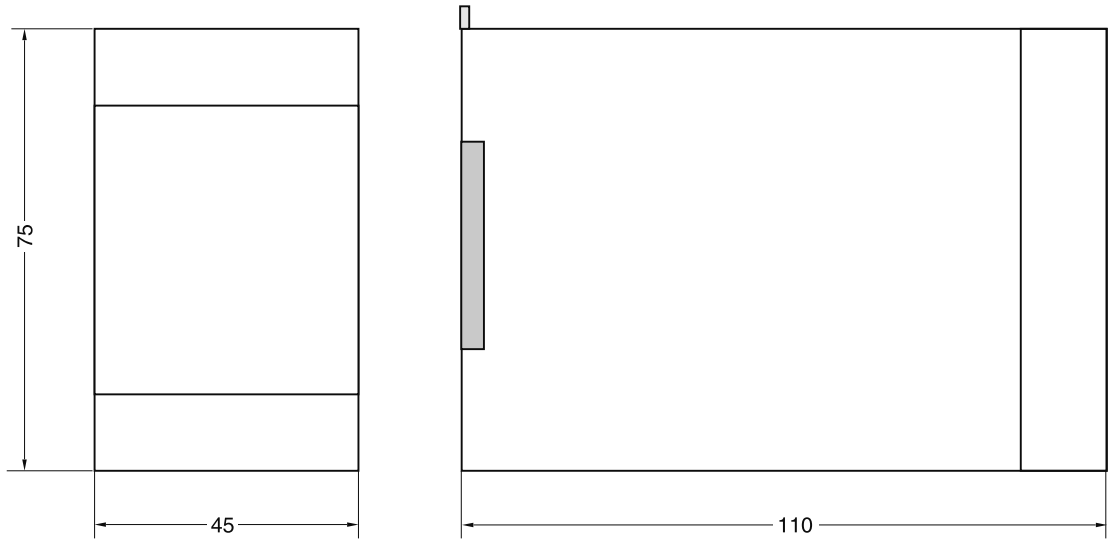

ProPxD interface program

The ProPxD software permits comfortable parameter setting for the module electronics. Via the clearly arranged entry mask the parameters can be monitored and modified. Storage of complete parameter sets is possible as well as printout or record as a text file for further documentation. Stored parameter sets may be loaded anytime and transmitted to other valves. Inside the electronics a nonvolatile memory stores the data with the option for recalling or modification.

The PC software can be downloaded free of charge at www.parker.com/euro_hcd – see page “Support" or directly at www.parker.com/propxd.

Features

- Comfortable editing of all parameters
- Depiction and documentation of parameter sets
- Storage and loading of optimized parameter adjustments
- Executable with all actual Windows® operating systems from Windows® XP upwards
- Plain communication between PC and electronics via serial interface RS232C

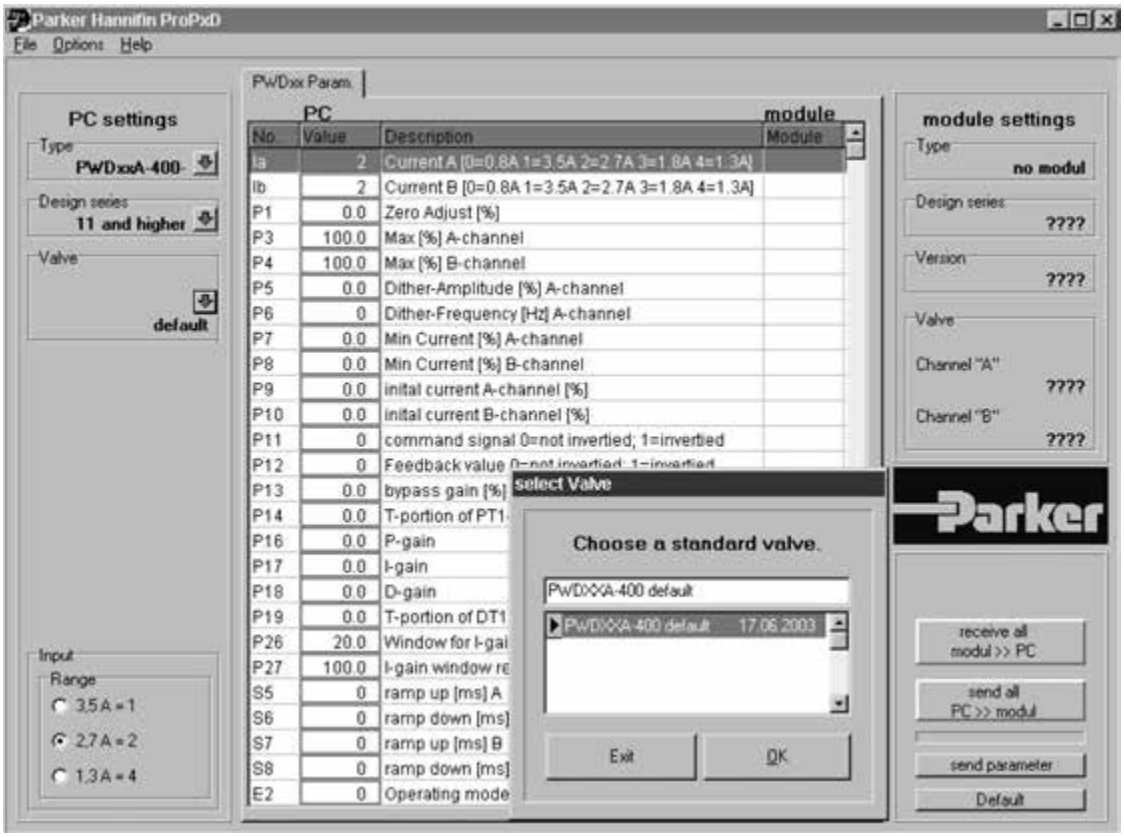

11

Parker electronic modules series PCD00A-400 for rail mounting are compact, easy to install and provide time-saving wiring by disconnectable terminals. The digital design of the circuit results in good accuracy and optimal adaption for proportional pressure/flow control valves by a comfortable interface program.

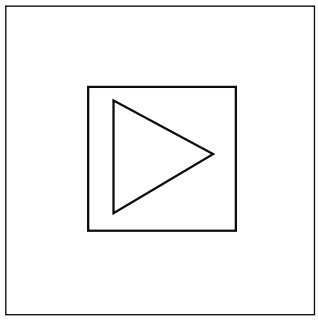

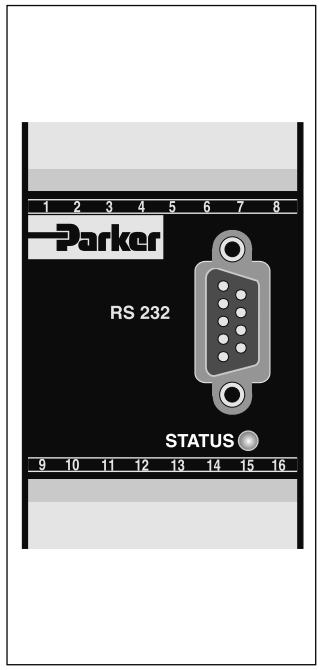

Features

The described electronic unit combines all necessary functions for the optimal operation of two proportional pressure/flow control valves (series R*R, R*V, RE*E*W, RE06M*W, DUR, PRPM, VBY, VMY, TDA, TEA).

The most important features are:

- Digital circuit design
- Two independent operable amplifiers
- Four parameterizable command channels
- Constant current control
- Two input stages 0...10 V
- Status output
- Two up/down ramp functions
- Enable input for solenoid driver
- Status indicator
- Parametering by serial interface RS232C
- Connection by disconnectable terminals
- Compatible to the relevant European EMC standards
- Comfortable PC user software, free of charge: www.parker.com/euro_hcd - see "Support", or directly at www.parker.com/propxd.

Ordering code

PCD	00	A	–	400	–	
Electronic module pressure/flow valves	**Without position control universal**			**2 Amplifiers min/max adjustment accel/decel ramps command inputs 4 command channels**		**Design series** (not required for ordering)

11

Technical data

General		
Model		Module package for snap-on mounting on EN 50022 rail
Package material		Polycarbonate
Inflammability class		V0 acc. UL 94
Installation position		unrestricted
Ambient temperature range	[°C]	-20...+60
Protection class		IP 20 acc. EN 60529
$MTTF_D$ value	[years]	150
Weight	[g]	160
Electrical		
Duty ratio	[%]	100
Supply voltage	[VDC]	18...30, ripple < 5 % eff., surge free [1)]
Current consumption max.	[A]	5.0
Pre-fusing	[A]	6.3, medium lag
Command signal	[V]	0...+10, ripple < 0.01 % eff., surge free, Ri = 150 kOhm
Input signal resolution	[%]	0.025
Differential input voltage max.	[V]	30 for terminals 5 und 6 against PE (terminal 8)
Enable signal	[V]	0...4.0: Off / 9.0...30: On / Ri = 30 kOhm
Command channel signal	[V]	0...4.0: Off / 9.0...30: On / Ri = 30 kOhm
Status signal	[V]	0...0.5: Off / Us: On / rated max. 15 mA
Adjustment ranges		
Min	[%]	0...50
Max	[%]	50...100
Ramp	[s]	0...32.5
Current	[A]	0.8 / 1.3 / 1.8 / 2.7 / 3.5
Interface		RS 232C, DSub 9p. male for null modem cable
EMC		EN 50081-2, EN 50082-2
Connection		Screw terminals 0.2...2.5 mm², disconnectable
Cable specification	[mm²] [mm²]	1.5 overall braid shield for supply voltage and solenoids (AWG16) 0.5 overall braid shield for sensor and signal (AWG20)
Cable length	[m]	50

Block diagram

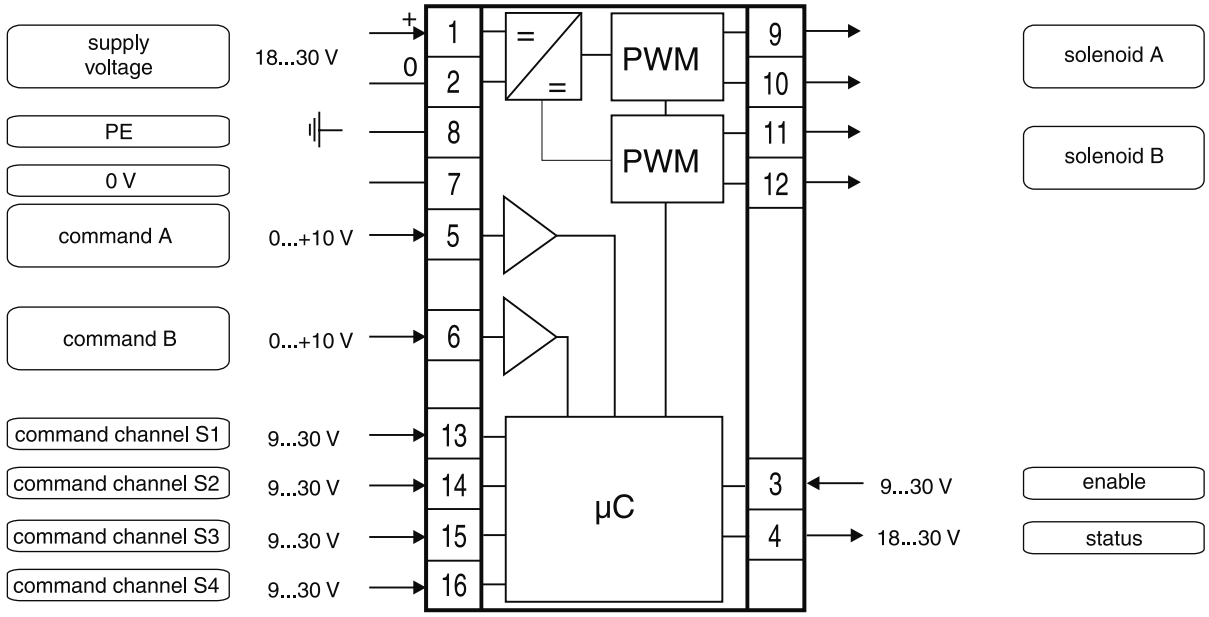

[1)] If solenoids with a nominal voltage of 24 V are connected, the supply voltage has to be raised to 29 V.

Signal flow diagram

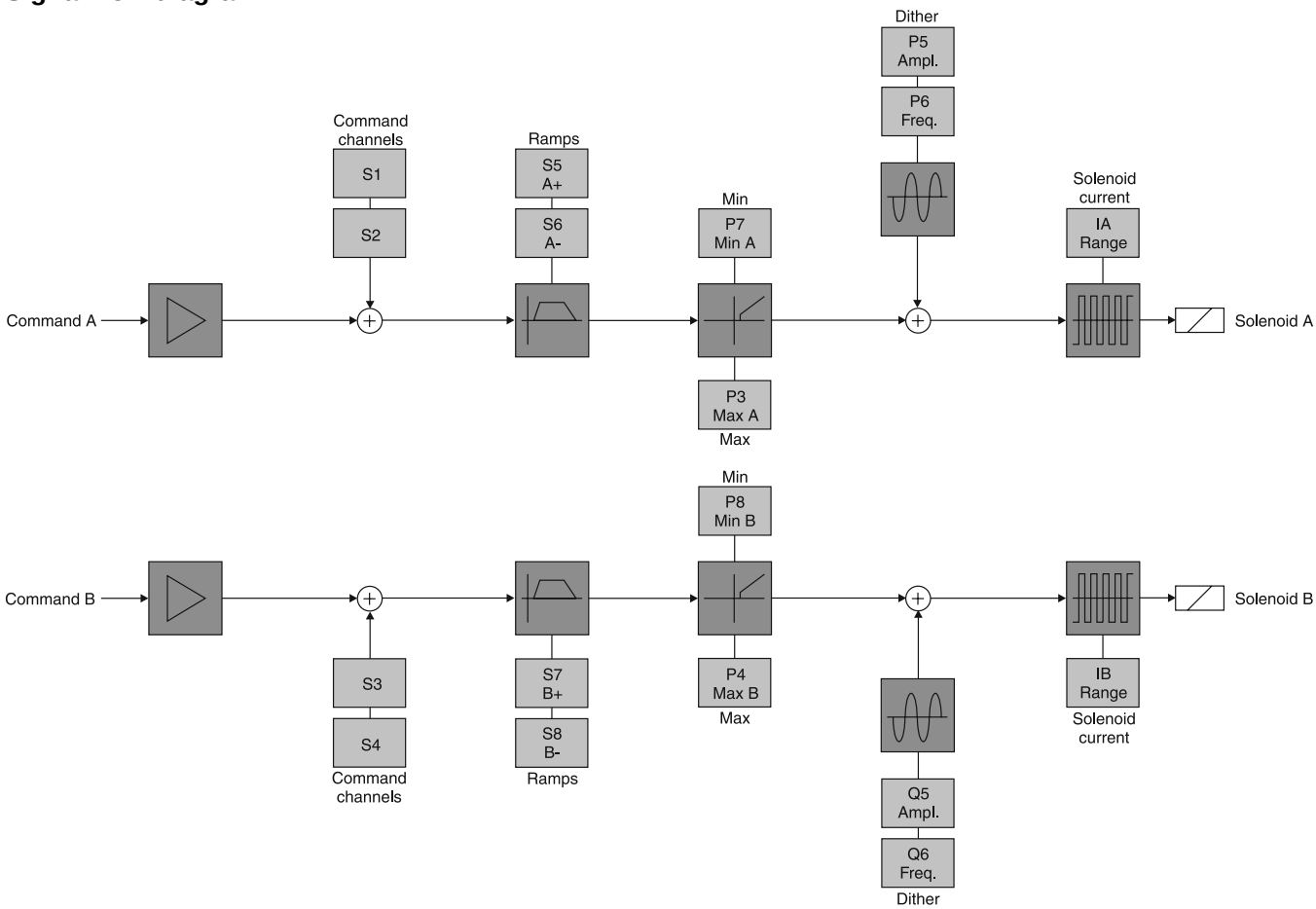

Dimensions

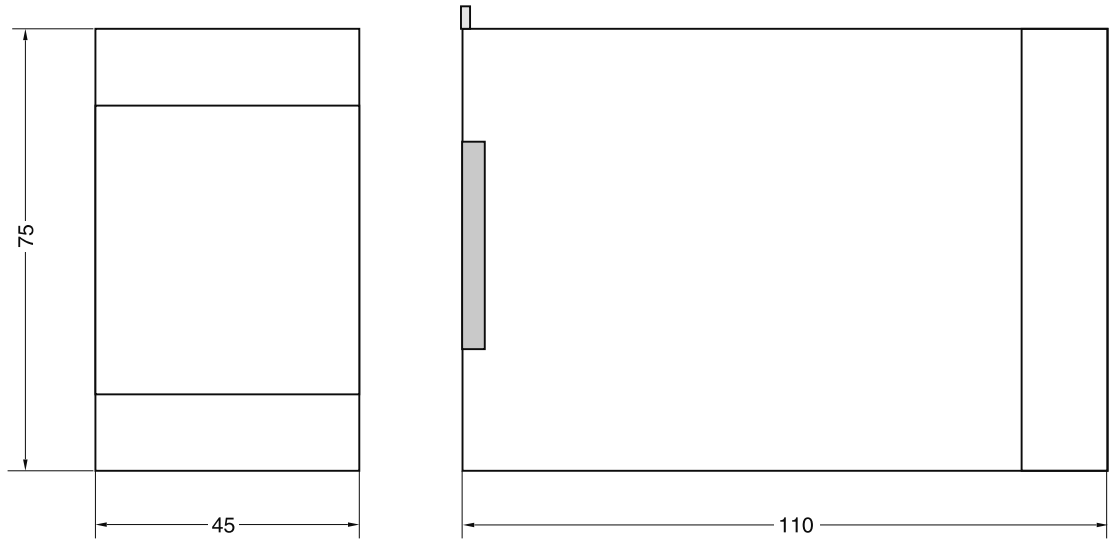

ProPxD interface program

The ProPxD software permits comfortable parameter setting for the module electronics. Via the clearly arranged entry mask the parameters can be monitored and modified. Storage of complete parameter sets is possible as well as printout or record as a text file for further documentation. Stored parameter sets may be loaded anytime and transmitted to other valves. Inside the electronics a nonvolatile memory stores the data with the option for recalling or modification.

The PC software can be downloaded free of charge at www.parker.com/euro_hcd – see page “Support" or directly at www.parker.com/propxd.

Features

- Comfortable editing of all parameters
- Depiction and documentation of parameter sets
- Storage and loading of optimized parameter adjustments
- Executable with all actual Windows® operating systems from Windows® XP upwards
- Plain communication between PC and electronics via serial interface RS232C

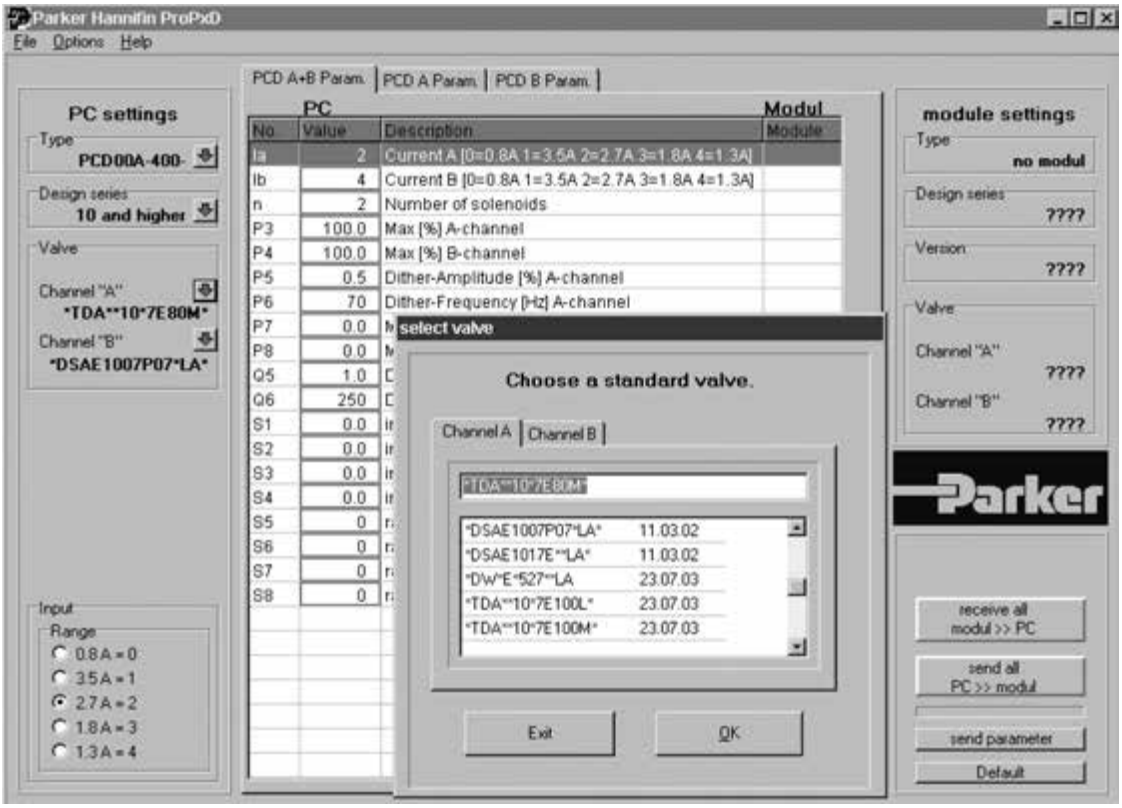

11

Parker electronic modules PZD00A-40* for rail mounting are compact, easy to install and provide time-saving wiring by disconnectable terminals. The digital design of the circuit results in good accuracy and optimal adaption for command signal processing by a comfortable interface program. The electronic unit may be connected in series to proportional valves with onboard electronic as well as to amplifier modules P*D.

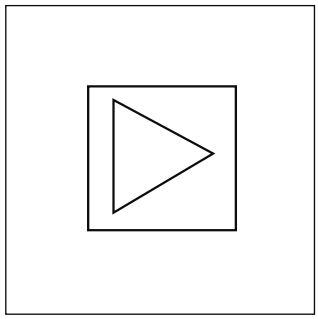

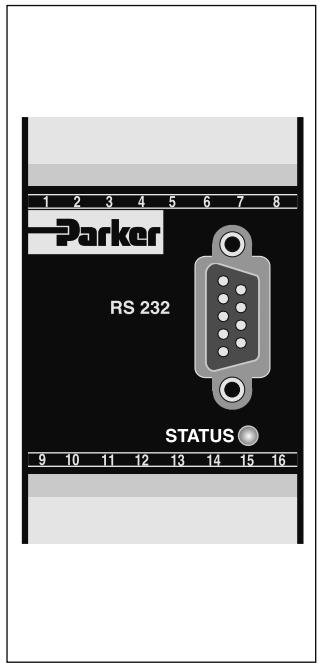

Features

- Digital circuit design
- Six parameterizable command channels with optional additive or priority dependent signal processing
- Output stage with different signal options
- Input stage with different signal options
- Status output
- Four-quadrant ramp function
- Reference output for potentiometer supply
- Status indicator
- Parametering by serial interface RS232C
- Connection by disconnectable terminals
- Compatible to the relevant European EMC standards
- Optional technology function "linearization"
- Comfortable PC user software, free of charge: www.parker.com/euro_hcd - see "Support", or directly at www.parker.com/propxd.

Ordering code

PZD	00	A	–	40	–	☐	–	☐
Electronic module auxiliary function	**Universal**			**6 Command channels command input accel/decel ramps**		**Technology function**		**Design series** (not required for ordering)

Code	Function
0	Standard
1	Linearization option

11

PZD00A UK.indd RH 17.04.2015

Technical data

General		
Model		Module package for snap-on mounting on EN 50022 rail
Package material		Polycarbonate
Inflammability class		V0 acc. UL 94
Installation position		unrestricted
Amb. temperature range	[°C]	-20...+60
Protection class		IP 20 acc. EN 60529
$MTTF_D$ value	[years]	150
Weight	[g]	160
Electrical		
Duty ratio	[%]	100
Supply voltage	[VDC]	18...30, ripple < 5 % eff., surge free
Current consumption max.	[mA]	100
Pre-fusing	[mA]	500 medium lag
Command signal options	[V] [mA] [mA]	+10...0...-10, ripple <0.01 % eff., surge free, Ri = 100 kOhm +20...0...-20, ripple <0.01 % eff., surge free, Ri = 200 Ohm 4...12...20, ripple <0.01 % eff., surge free, Ri = 200 Ohm <3.6 mA = output signal 0 V / 0 mA / 12 mA acc. to output option >3.8 mA = output signal on (acc. NAMUR NE43)
Input signal resolution	[%]	0.025
Differential input max.	[V]	30 for terminals 5 und 6 against PE (terminal 8)
Command channel signal	[V]	0...1.0: Off / 5...30: On / Ri = 100 kOhm
Status signal	[V]	0...0.5: Off / Us: On / rated max. 15 mA
Output signal options	[V] [mA] [mA]	+10...0...-10, rated max. 15 mA +20...0...-20, Ro < 500 Ohm 4...12...20, Ro < 500 Ohm
Output signal resolution	[%]	0.025
Reference output	[V]	+10 / -10, 2 %, rated max. 15 mA
Adjustment ranges Min Max Cmd channels Ramp Zero offset	[%] [%] [%] [s] [%]	0...50 50...100 +100...-100 0...32.5 +100...-100
Interface		RS 232C, DSub 9p. male for null modem cable
EMC		EN 50081-2, EN 50082-2
Connection		Screw terminals 0.2...2.5 mm², disconnectable
Cable specification	[mm²]	0.5 overall braid shield (AWG20)
Cable length	[m]	50
Options		
Technology function	Code1	Software adjustable transfer function with 10 compensation points for linearization of valve behaviour

Block diagram

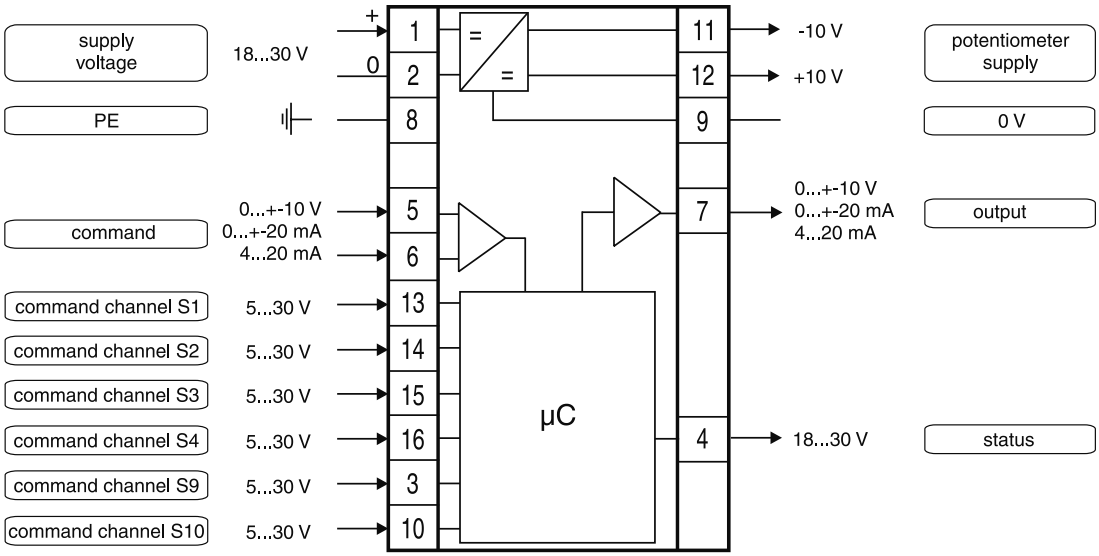

Signal flow diagram

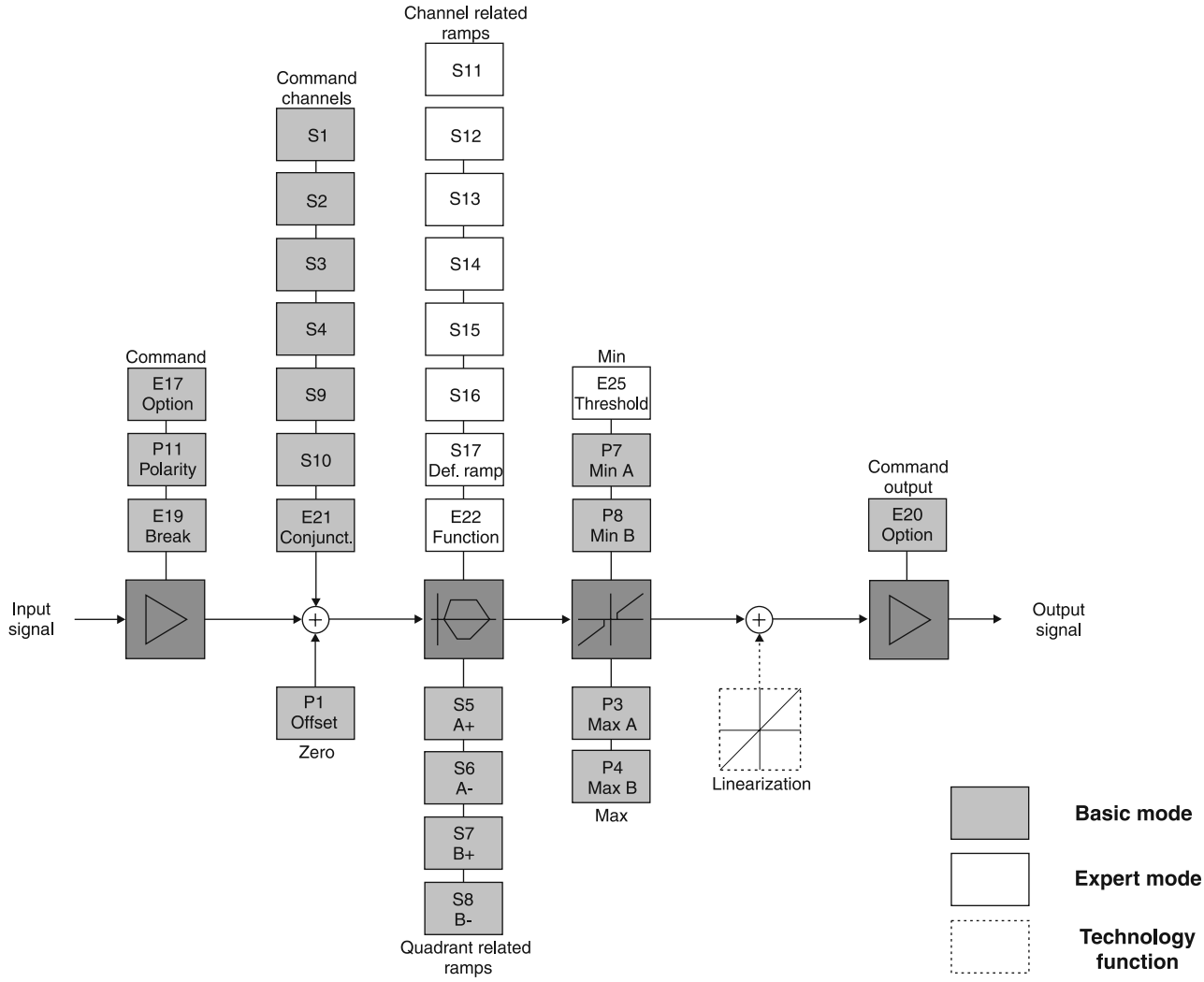

Dimensions

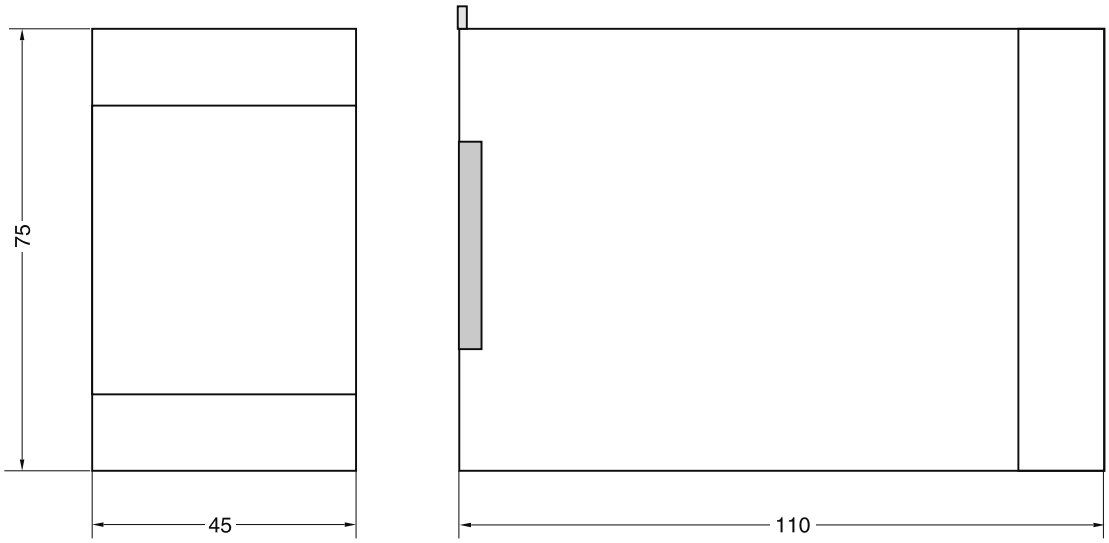

ProPxD interface program

The ProPxD software permits comfortable parameter setting for the module electronics. Via the clearly arranged entry mask the parameters can be monitored and modified. Storage of complete parameter sets is possible as well as printout or record as a text file for further documentation. Stored parameter sets may be loaded anytime and transmitted to other valves. Inside the electronics a nonvolatile memory stores the data with the option for recalling or modification.

The PC software can be downloaded free of charge at www.parker.com/euro_hcd – see page “Support" or directly at www.parker.com/propxd.

Features

- Comfortable editing of all parameters
- Depiction and documentation of parameter sets
- Storage and loading of optimized parameter adjustments
- Executable with all actual Windows® operating systems from Windows® XP upwards
- Plain communication between PC and electronics via serial interface RS232C

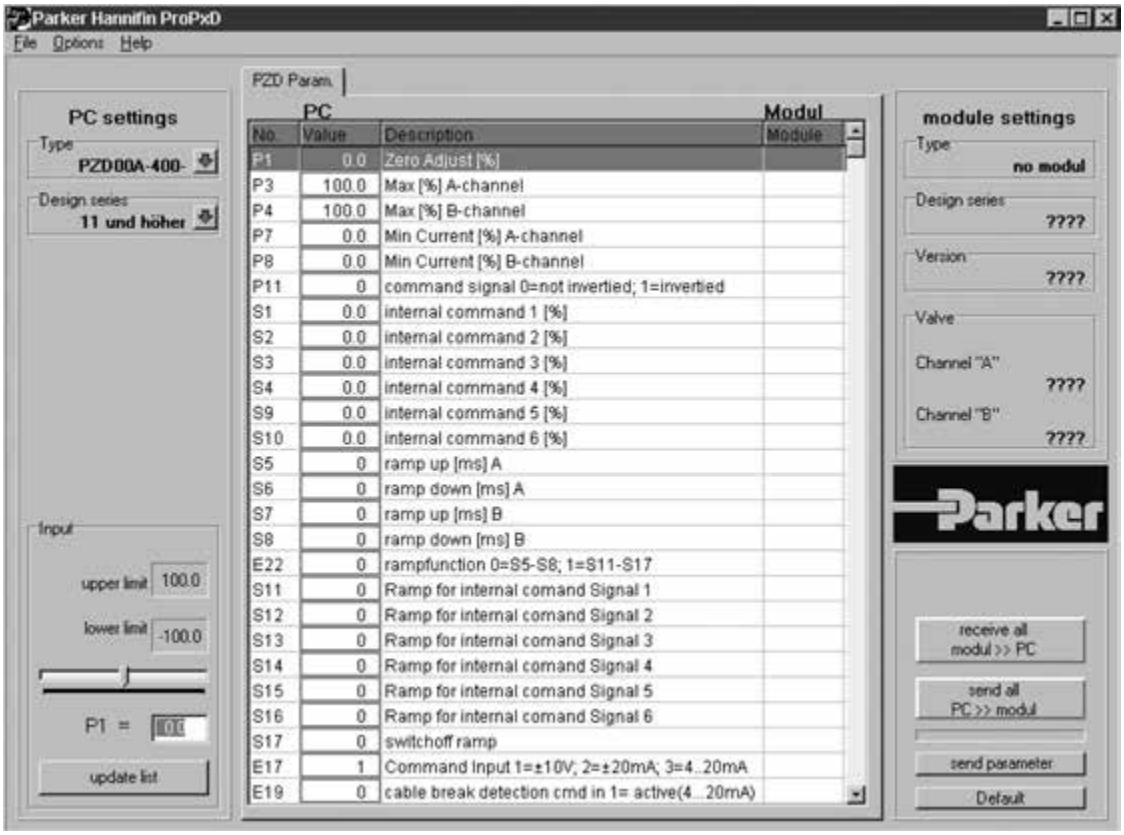

Parker electronic modules PID00A-40* for rail mounting are compact, easy to install and provide time-saving wiring by disconnectable terminals. The digital design of the circuit results in good accuracy and optimal adaption for closed loop controls by a comfortable interface program.

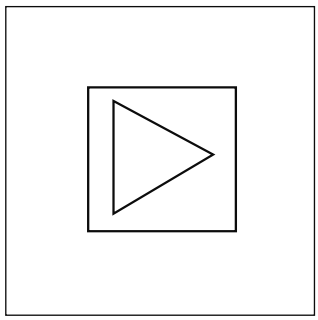

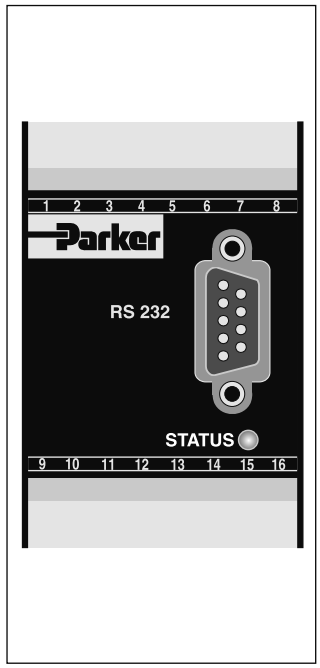

Features

The described electronic unit combines all necessary functions for the optimal operation of closed loop controls. The most important features are:

- Extended PID controls
- Speed control with position feedback
- Differential input stage with different signal options
- Output stage with different output options
- Four-quadrant ramp function
- Status indicator
- Digital circuit design
- Parametering by serial interface RS232C
- Connection by disconnectable terminals
- Compatible to the relevant European EMC standards
- Optional technology function "linearization"
- Comfortable PC user software, free of charge: www.parker.com/euro_hcd - see "Support", or directly at www.parker.com/propxd.

Ordering code

PID — Electronic module closed loop control

00 — Universal

A – **40** – [ ] – [ ]

40 — Min/Max adjustment accel/decel ramps command input

[ ] — Technology function

[ ] — Design series (not required for ordering)

Code	Function
0	Standard
1	Linearization option

Technical data

General		
Model		Module package for snap-on mounting on EN 50022 rail
Package material		Polycarbonate
Inflammability class		V0 acc. UL 94
Installation position		unrestricted
Ambient temperature range	[°C]	-20...+60
Protection class		IP 20 acc. EN 60529
$MTTF_D$ value	[years]	150
Weight	[g]	160
Electrical		
Duty ratio	[%]	100
Supply voltage	[VDC]	18...30, ripple < 5 % eff., surge free
Current consumption max.	[mA]	100
Pre-fusing	[mA]	500
Command signal options	[V]	+10...0...-10, ripple <0.01 % eff., surge free, Ri = 100 kOhm
	[mA]	+20...0...-20, ripple <0.01 % eff., surge free, Ri = 200 Ohm
	[mA]	4...12...20, ripple <0.01 % eff., surge free, Ri = 200 Ohm <3.6 mA = solenoid output off, >3.8 mA = solenoid output on (acc. NAMUR NE43)
Input signal resolution	[%]	0.025
Differential input voltage max.	[V]	30 for terminals 5 und 6 against PE (terminal 8)
Enable signal	[V]	0...1: Off / 5...30: On / Ri = 100 kOhm
Status signal	[V]	0...0.5: Off / Us: On / rated max. 15 mA
Monitor signal	[V]	+10...0...-10, rated max. 5 mA, signal resolution 0.4 %
Output signal options	[V]	+10...0...-10, rated max. 15 mA
	[mA]	+20...0...-20, Ro < 500 Ohm
	[mA]	+50...0...-50, Ro < 200 Ohm
	[mA]	4...12...20, Ro < 500 Ohm
Output signal resolution	[%]	0.025
Potentiometer supply	[V]	+10...0...-10 2 %, rated max. 15 mA
Sensor supply	[V]	18...30 (Us), rated max. 100 mA
Adjustment ranges Min	[%]	0...50
Max	[%]	50...100
Ramp	[s]	0...32.5
Zero offset	[%]	+100...-100
Interface		RS 232C, DSub 9pole male for null modem cable
EMC		EN 50081-2, EN 50082-2
Connection		Screw terminals 0.2...2.5 mm², disconnectable
Cable specification	[mm²]	0.5 overall braid shield (AWG20)
Cable length	[m]	50
Options		
Technology function	Code1	Software adjustable transfer function with 10 compensation points for linearization of valve behaviour

Block diagram

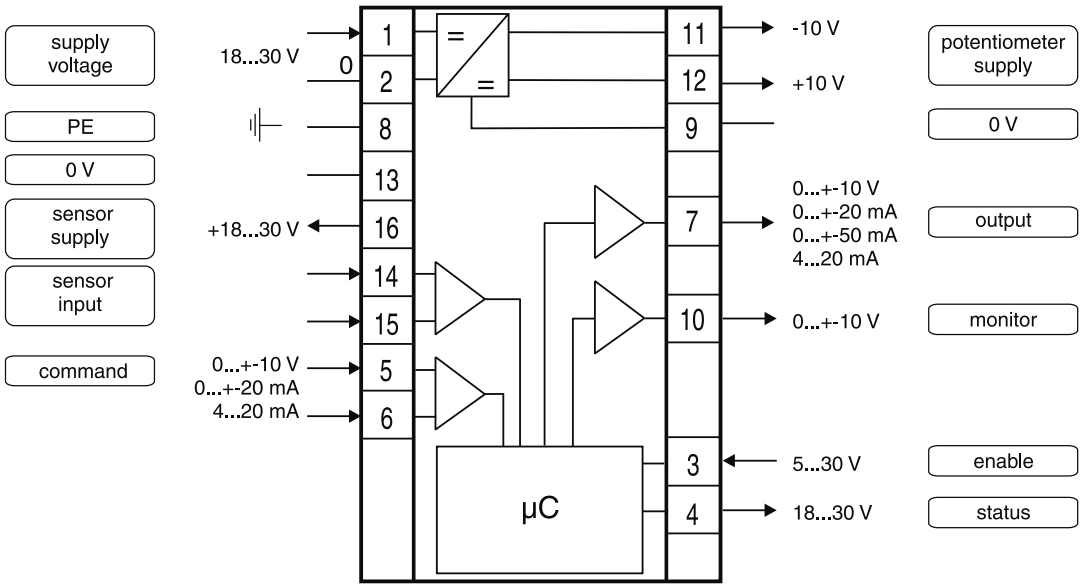

Signal flow diagram

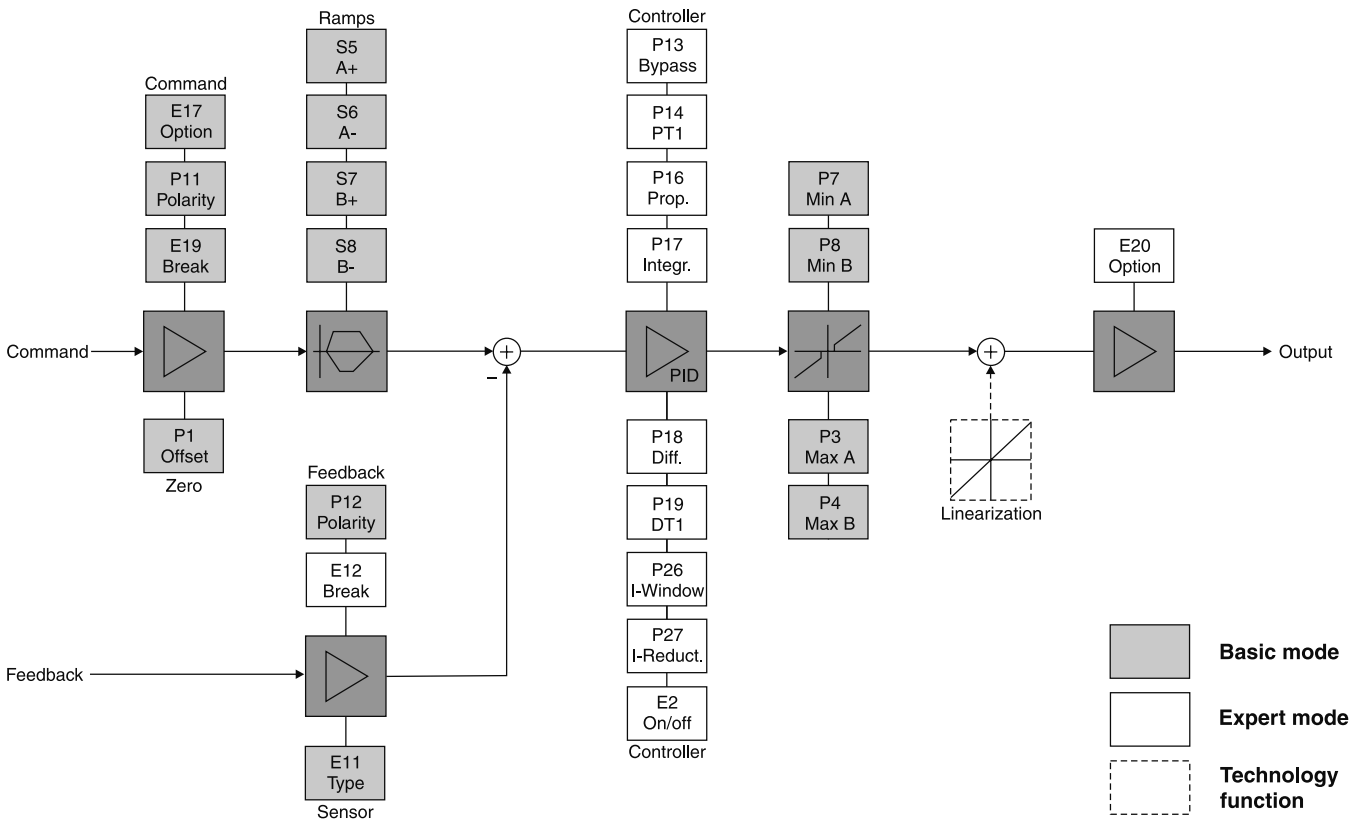

Dimensions

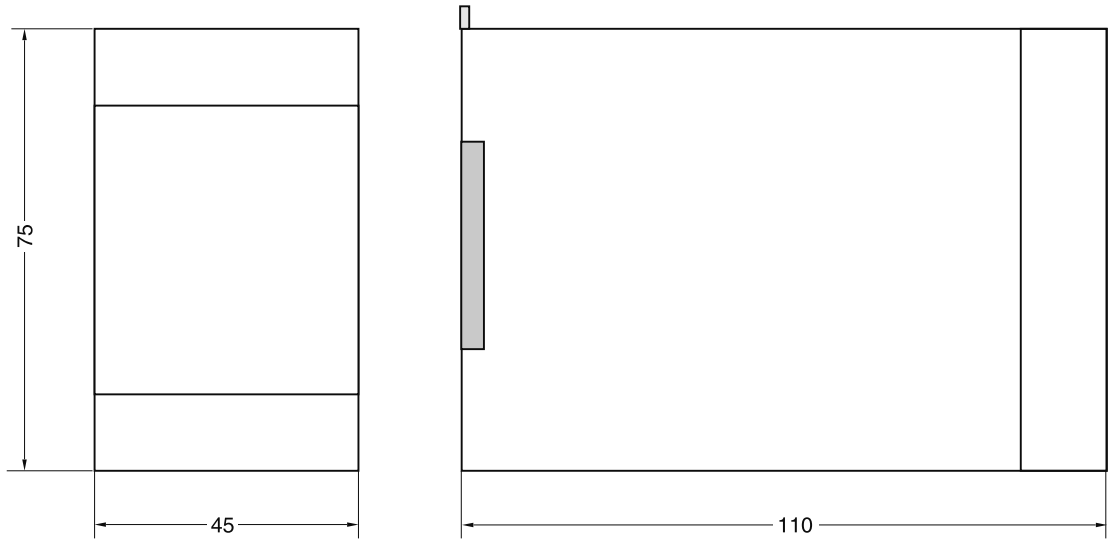

ProPxD interface program

The ProPxD software permits comfortable parameter setting for the module electronics. Via the clearly arranged entry mask the parameters can be monitored and modified. Storage of complete parameter sets is possible as well as printout or record as a text file for further documentation. Stored parameter sets may be loaded anytime and transmitted to other valves. Inside the electronics a nonvolatile memory stores the data with the option for recalling or modification.

The PC software can be downloaded free of charge at www.parker.com/euro_hcd – see page “Support" or directly at www.parker.com/propxd.

Features

- Comfortable editing of all parameters
- Depiction and documentation of parameter sets
- Storage and loading of optimized parameter adjustments
- Executable with all actual Windows® operating systems from Windows® XP upwards
- Plain communication between PC and electronics via serial interface RS232C

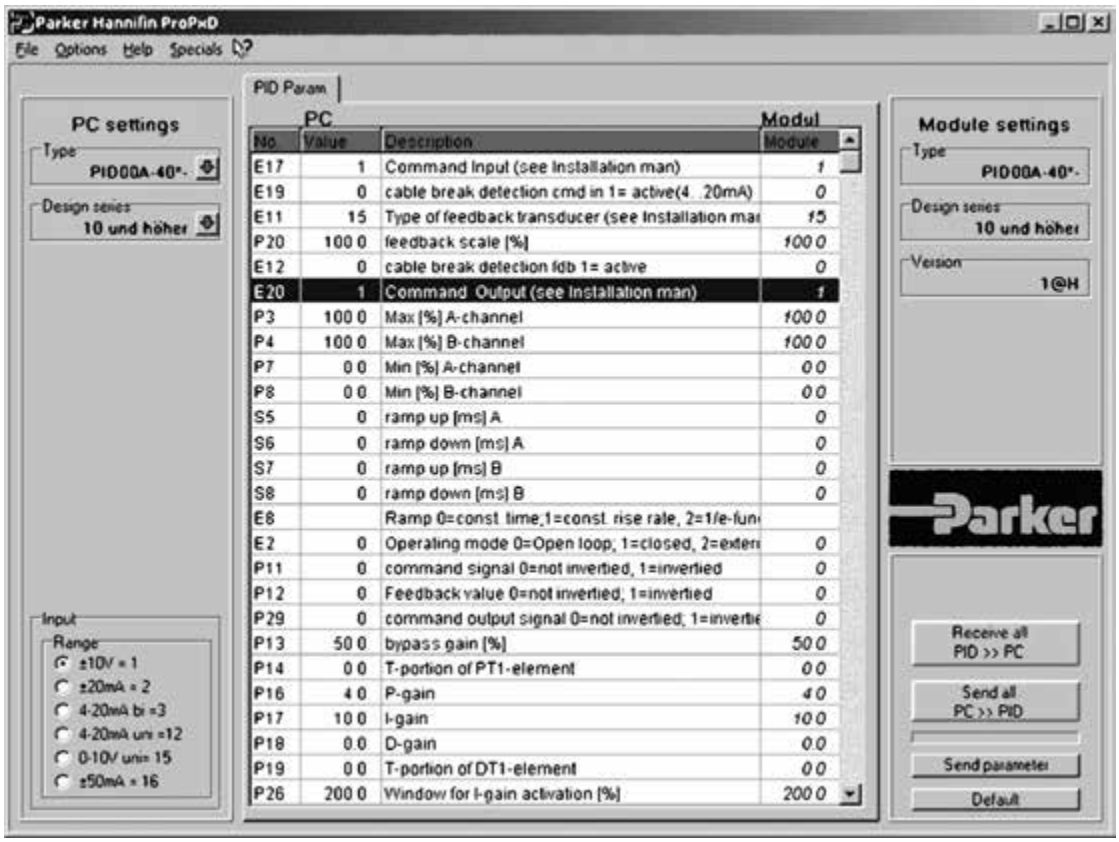

11

The Compax3F is a part of the servo drive family of Parker Hannifin. It is especially designed for the requirements of electrohydraulic systems and in particular for position und force control of electrohydraulic axis.

Attention:

For application support and customized software, please contact your local Parker representative.

Large drive range

- Valves:
  - Proportional direction control valves
  - Proportional pressure relief- and pressure reducing valves
  - Flow valves
- Drives:
  - Cylinders
  - Rotary drives
  - Motors

Range of application

- Closed loop position and force control of linear cylinders and rotary drives
- Switching between position and force control
- Synchronous run with up to 64 axes

Typical applications

- Feeder axis
- Position and force control of press cylinders in material forming machines
- Roller clearance control in roller presses
- Die casting machines
- Custom-designed software packages on request

Ordering Code

C3	F001	D2	F12			
Series				Interface	Technology functions	Options

Code	Interface	T11	T30	T40
I11	Digital inputs/outputs		•	•
I12	Digital inputs/outputs	•		
I20	Profibus DP V0/V1/V2 (12 Mbit/s)	•	•	•
I21	CANopen		•	•
I22	DeviceNet		•	•
I30	PowerLink		•	•
I31	EtherCAT		•	•
I32	Profinet	•	•	•

Code	Options
M00	Standards
M10	Extension 12 digital I/Os & HEDA (motion bus)
M11	HEDA (motionbus)
M12	Extension 12 digital I/Os

Code	Technology functions
T11	Positioning/pressure and force control
T30	Programmable motion control according to IEC61131
T40	Electronic Cam

Connection set for Compax3F included in delivery.

Complete kit with mating plug connectors (X1, X2 and X3) for Compax3 connectors, special shield connecting terminal and snap-on foot for mounting rail

Function	Motion control with motion profils. Suitable for position and force/pressure control
Housing / protection class	closed metal housing, isolation according to VDE 0160 / IP 20
Supply voltage [VDC] Current requirements [A]	21...27, ripple <1VSS 0,8 for the device, digital outputs 100 mA each
Supported feedback-systems	• Analog 0..20 mA, 4..20 mA, ±10 V • Start-Stop-Interface • SSI-Interface • EnDat2.2-Interface • 1VSS (max. 400 kHz) Interface, 13.5 Bit / Distance coding • TTL (RS422) (max. 5 MHz), internal post-quadrature resolution
Set point generator	• Jerk-limited ramps • Travel data in increments, mm, inches or variable by scale factor • Specification of speed, acceleration, delay and jerk factor • Force/pressure inputs in N, psi, etc. variable by scale factor
Monitoring functions	• Power/auxiliary supply range • Following error monitoring • Hard- and software switches
Inputs and Outputs	• 8 control inputs: 24 VDC / 10 kOhm • 4 control outputs Active HIGH / short-circuit protected / 24 V / 100 mA • 4 analog current input (14 Bit) • 2 analog voltage input (14 Bit) • 4 analog outputs (16 Bit, current or voltage) switchable in pairs
RS232 / RS485 (switchable) RS232: RS485 (2 or 4-wire):	 • 115200 Baud • Word length 8 bits, 1 start bit, 1 stop bit • Hardware handshake XON, XOFF • 9600, 19200, 38400, 57600 or 115200 Baud • Word length 7/8 Bit, 1 Start-, 1 Stop bit • Parity (switchable) even/odd
Bus systems	• Profibus DP V0-V2 (I20), 12 Mbit/s, PROFIdrive-Profil Drive technology • CANopen (CiADS402) (I21) • DeviceNet (I22) • PowerLink (I30) • EtherCAT (I31) • Profinet (I32)
CE compliance	• EMC interference emission/limit values for industrial utilization according to EN61 800-3 first environment (commercial and residential area), class A via integrated mains filter for up to 10m cable length, otherwise with external mains filter • EMC immunity/limit values for industrial utilization according to EN61 800-3
Insulation requirements	• Protection class I according to EN 50178 (VDE 0160 part 1) • Contact protection: according to DIN VDE 0106, part 100 • Overvoltage: Voltage class III according to HD 625 (VDE 0110-1) • Degree of contamination 2 according to HD 625 (VDE 0110 part 1) and EN 50178 (VDE 0160 part 1)
Environmental conditions General environmental conditions acc. to EN 60 721-3-1 to 3-3	 • Climate (temperature / humidity / barometric pressure) • Class 3K3
Permissible ambient temperature	• Operation: 0 to +45 °C class 3K3 • Storage: -25 to +70 °C class 2K3 • Transport: -25 to +70 °C class 2K3
Tolerated humidity: non condensing	• Operation: <= 85 % class 2K3 • Storage: <= 95 % class 3K3 (relative humidity) • Transport: <= 95 % class 2K3
Elevation of operating site: <=1000 m above sea level for 100 % load ratings	• Please inquire for greater elevations • Protection class IP20 according EN 60 529
EMC directives and harmonised EC norms	• EC low voltage directive 73/23/EEC and RL 93/68/EEC: EN 50 178, General industrial safety norm Equipping electric power systems with electronic operating equipment HD 625, general electrical safety. Insulation principles for electrical operating equipment EN 60 204-1, Machinery norm, partly applied • EC-EMC directive 89/336/EEC: EN 61 800-3, EMC norm Product standard for variable speed drives EN 50 081-2 ... 50 082-2, EN 61 000-4-2 ...61 000-4-5
UL-Certification	USL according to UL508 (listed) / CNL according to C22.2 No: 142-M1987 (listed) Certified: E-File-No: E198563
Weight [kg]	2.0

C3F UK.indd RH 17.04.2015

Application example

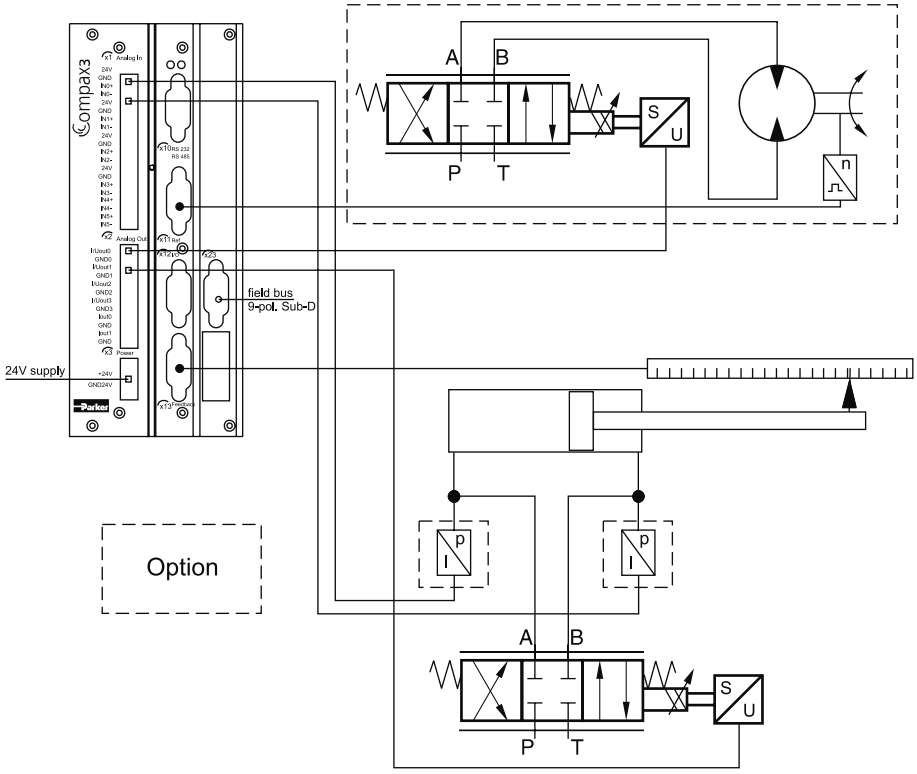

Dimensions

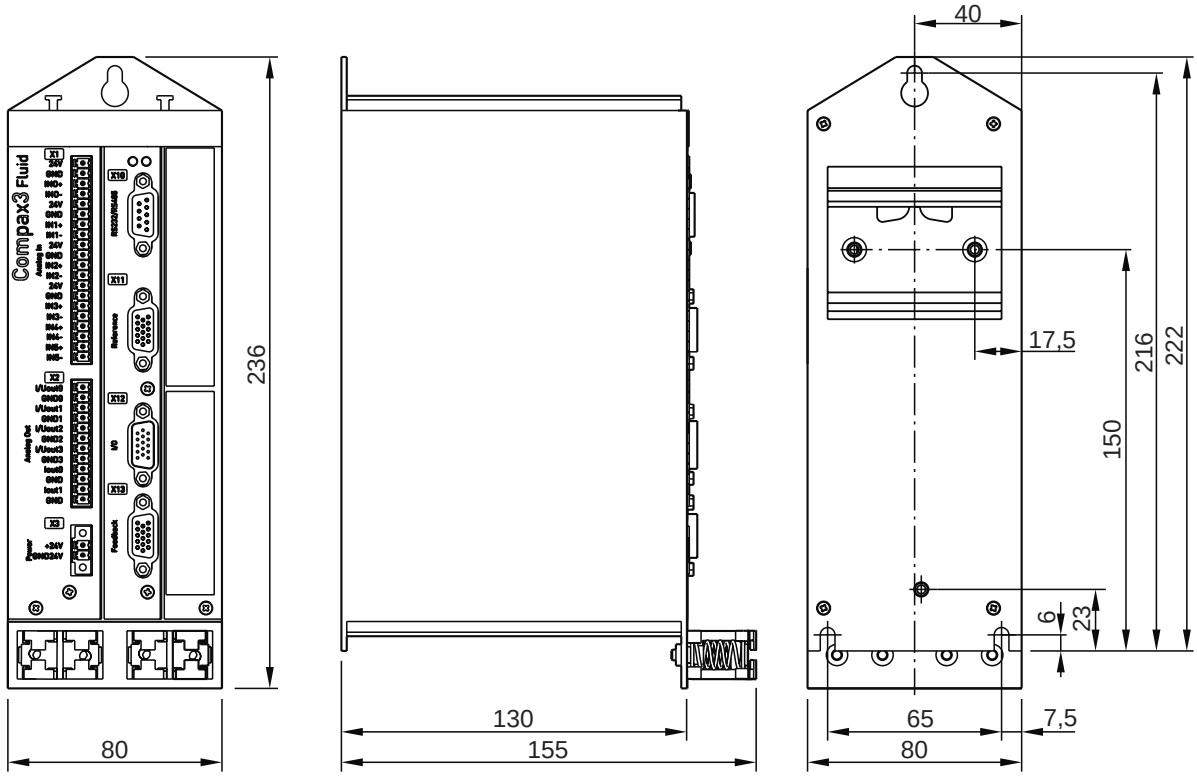

Project development, commissioning and programming

- Compax3 ServoManager
  - Intuitively understandable user interface
  - Wizard technology
  - Online help
  - Oscilloscope function
  - Optimized co-ordination of complete mechatronic systems
- Valve and Drive manager
  - All technical data of Parker valves, cylinders and drives available
  - Additionally support through the Compax3F Hydraulics-Manager by configuration of user defined valves and drives.

Software download, free of charge:
www.compax3.com

Operator Panels

Control equipment for all text and graphics applications in industrial environments, from two-line displays to touch-panels using field busses:
- Profibus DP
- CANopen
- DeviceNET
- Interbus-S

For further information please refer to POP: "Parker Operator Panels". Download: www.parker-eme.com/pop.

In addition to drivers for Compax3/Compax3 powerPLmC, drivers for other PLC products can be integrated on request.

Service module

- Backlit plug-in module, text display with two sixteen-character lines
- Simple menu navigation with 4 keys
  - Display of status values and
  - clear text error messages
- Used for changing parameters and manual operation

ActiveX plug-in for Integration with the Office enviroment

- Office and industrial environments are constantly growing closer together.
- The use of ActiveX technology allows simple integration into Office application.

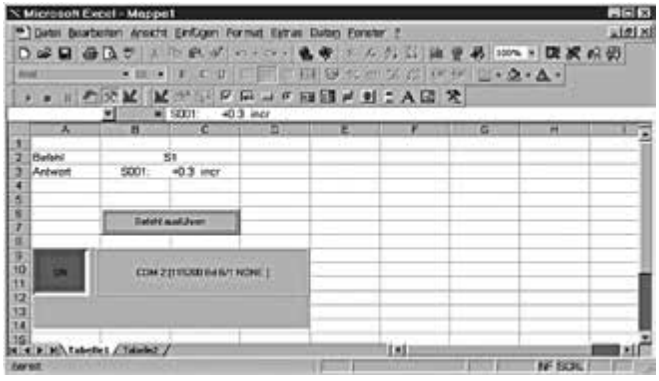

Interface - Field bus

- Profibus DP
- CANopen (CiADS402)
- DeviceNet
- PowerLink
- EtherCAT
- Profinet
- Address configurable via Dip switch

11

Connection of external inputs/outputs with Parker E/A-System (PIO)

Additional external digital and analog inputs and outputs can be integrated via the CANopen.

International standards in programming

- Programming system
  - CoDeSys
- Programming language
  - IEC61131-3
  - Function modules based on PLCopen

Jerk-limited set point generation, resulting in

- Gentle handling of the items being moved
- Increased service life of mechanical components
- Overshoot-free positioning
- Reduced excitation of mechanical resonance frequencies

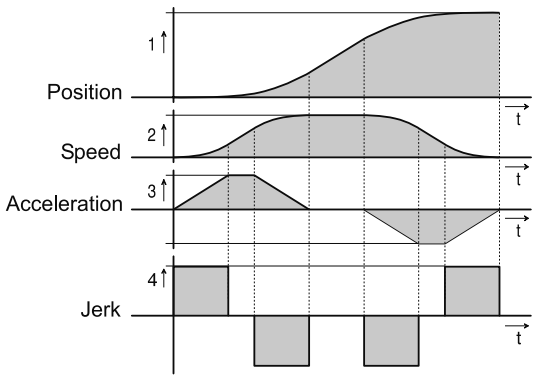

Control

a) General

- 2 control loops for each axis for combined position and force/pressure control

b) Position control

- Automatic controller design for position control
  - User-oriented optimization of parameters
- Feed forward control of speed and acceleration which results in:
  - Optimization of the response behaviour
  - Minimization of the following error

c) Force/Pressure controller

- PID controller with feed forward control of speed

d) 2-axis synchronous run and hydraulic specific functions

- Realization of many different circuit concepts with up to 4 proportional valves possible
- Linearization functions:
  - Consideration of the area of differential cylinders
  - Inverting of the valve set value
  - Compensation of the load pressure (additional pressure sensors necessary)
  - Correction of the nonlinear flow characteristic of the valve
  - Overlap compensation
  - Valve zero point correction
  - Valve set value filters
  - Valve set value limitation
  - All functions for each valve individually available
  - Automatic configuration by component selection in the Compax3 ServoManager

e) Custom-designed software packages on request

Set up controller optimization

- Compax3F HydraulicsManager
  - All necessary technical data of Parker valves and drives are available
  - additional supported
- Test movement for automatic controller attitude
- Optimization with integrated oscilloscope function
- Automatic pre-setting of the controller for position control possible

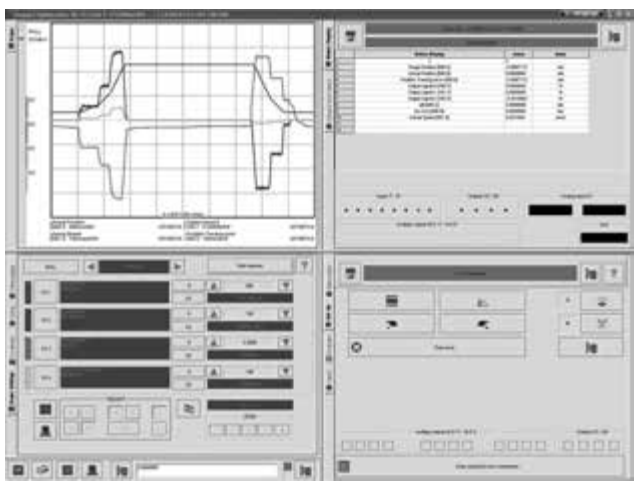

Overview technology functions

	T11	T30	T40
Set tables for up to 31 motion profiles	x		
Absolute or relative positioning	x	x	x
Force/pressure control	x	x	x
Electronic Gearbox	x	x	x
Dynamic positioning	x	x	x
Hydraulic specific control technology	x	x	x
Reg-related positioning	x	x	x
Programmable according to IEC61131-3		x	x
Programming system CoDeSys		x	x
Up to 6500 instructions		x	x
Recipe table with 288 variables		x	x
PLCopen		x	x
Mark synchronization			x
Cam switching mechanism			x
Cam profiles			x
Coupling and decoupling function			x
Custom-designed software packages*		O	O
Digital I/Os (RS232/485)	x	x	x
Profibus	O	O	O
CANopen		O	O
DeviceNet		O	O
Ethernet Powerlink		O	O
EtherCAT		O	O
Profinet	O	O	O

x = Standard
O = Optional
* on request

Benefits
- No programming skills necessary
- Set table with various motion
- Full controller range available
- An ideal basis for many applications in high-performance motion automation

Function range T11
- Set tables for positioning, pressure and force control up to 31 motion profiles:
  - Absolute or relative positioning
  - Force/pressure control
  - Speed control
  - Electronic gearing
- Superimposed force and pressure control
- Controller switching between position and force/pressure control

Extended Function range
- Absolute force control
- Superimposed force and pressure control
- Controller switching between position and force/pressure control
- 2-axis synchronous

Absolute or relative positioning
A motion set defines a complete motion with all settable parameters

1. Target position
2. Travel speed
3. Maximum acceleration
4. Maximum deceleration
5. Maximum jerk

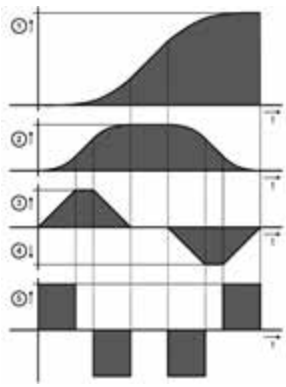

Stop movement
The Stop set interrupts the current motion set

Reg-related positioning
For registration mark-related positioning, 2 motions are defined:

- RegSearch: Search of an external signal, e.g. a registration mark on a product
- RegMove: The external signal interrupts the search movement and the second movement by an offset follows without transition
- Precision of the registration mark detection: <1µs

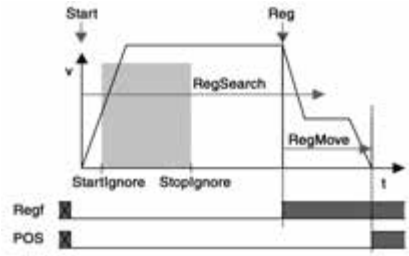

Electronic Gearbox:
Motion synchronized to a master axis with any transmission ratio. The position of a master axis can be detected via:

- ±10 V analog input
- Step/direction command Input
- the encoder input or
- HEDA, with Compax3 Master

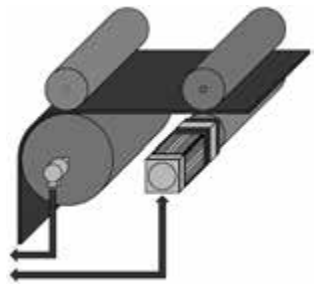

Dynamic positioning
A new motion profile can be selected during a positioning sequence - a smooth transition takes place.

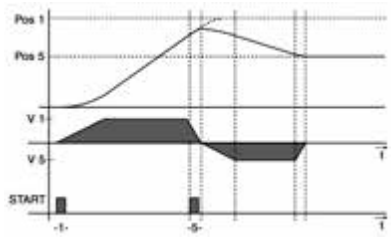

11

General

Due to its high flexibility and efficiency the Compax3 motion control according to PLCopen is for most applications the optimal basis for decentralized motion control.

Positioning with function modules based on PLCopen

- Programmable based on IEC61131-3
- Programming system: CoDeSys
- Up to 6500 instructions
- 500 16-bit variables / 150 32-bit variables
- Recipe table with 288 variables
- 3 16-bit saved variables (power failure protected) / 3 32-bit saved variables (power failure protected)
- PLCopen-function modules:
  - Positioning: absolute, relative, additive and continuous
  - Machine zero
  - Stop, energizing the power stage, quit
  - Position, device status, reading axis error
  - Electronic gearbox (Mc_GearIn)
- IEC61131-3-standard modules:
  - Up to 8 timers (TON, TOF, TP)
  - Trigger (R_TRIG, F_TRIG)
  - Flip-flops (RS, SR)
  - Counters (CTU, CTD, CTUD)
- Device-specific function modules:
  - C3_Input: reading digital inputs
  - C3_Output: writing digital inputs
  - C3_ReadArray: access to recipe table
- Inputs/outputs:
  - 8 digital inputs (24 V level)
  - 4 digital outputs (24 V level)
  - 6 analog inputs (14 bits)
  - 4 analog outputs (16 bits)
  - Optional addition of 12 digital inputs/outputs

PLCopen function blocks

- Absolute positioning
- Relative positioning
- Additive positioning
- Continuous positioning
- Stop
- Machine zero
- Energizing the power output stage
- Reading device status
- Reading axis error
- Acknowledging errors
- Reading the current position
- Electronic gearbox (gearing)

Example of an field bus interface controlled IEC61131-application

- 2 control words are placed on the cyclic channel of the bus.
- The position data records (position, speed, acceleration etc.) are stored in a table (array).
- The desired position data record is selected with Controlword_2.
- The individual bits of Controlword_1 control positioning.
- A return message is sent via a status word on the cyclic channel of the bus.

Example of a bus interface controlled IEC61131 application

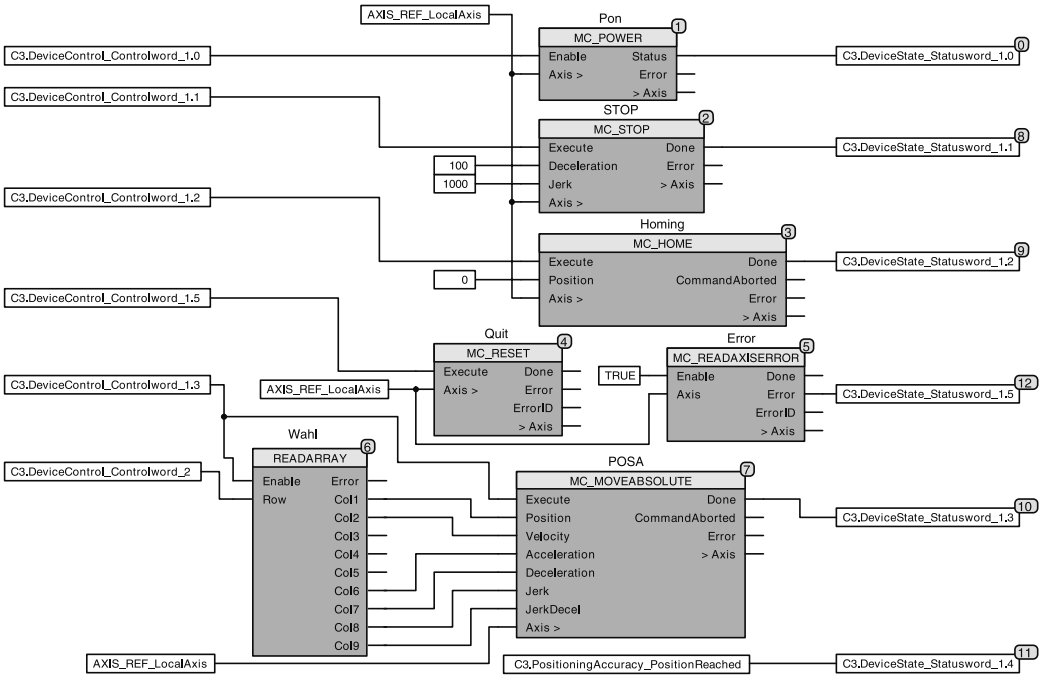

General

Compax3 T40 is able to simulate mechanical cams and cam switching mechanisms electronically. The T40 electronic cam was especially optimized for:

- The packaging machine industry
- The printing industry
- All applications, where a mechanical cam is to be replaced by a flexible, cyclic electronic solution

This helps to solve discontinuous material supply, flying-knive and similar drive applications using distributed drive technology.

Compax3 T40 supports both real and virtual master movements. In addition, the user can switch to other cam profiles or cam segments ‚on the fly'.

Programming is carried out in the well-known IEC61131-3 environment.

With the aid of the cam function modules and CamDesigner, cam applications can be implemented very easily.

Function T40

- Technology functions of the T30 version fully integrated and available
- Master position acquisition
- Mark synchronization
- Cam switching mechanism
- Coupling and decoupling function
- Cam profiles
- Cam memory
- Cam creation with CamDesigner

Master position acquisition

- Acquisition by incremental encoder
- Acquisition by the HEDA real-time bus
- Virtual Master:

A second axis in the IEC program can be used to program a motion profile, which serves as a master for one or several axes.

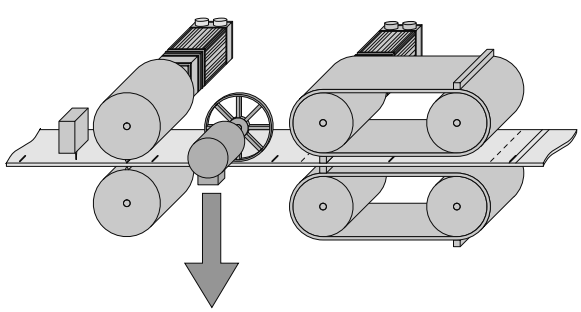

Mark synchronization

- Master or slave oriented (simultaneous, cam-independent)
- Highly-precise mark recognition (accuracy <1µs; Touch-probe)

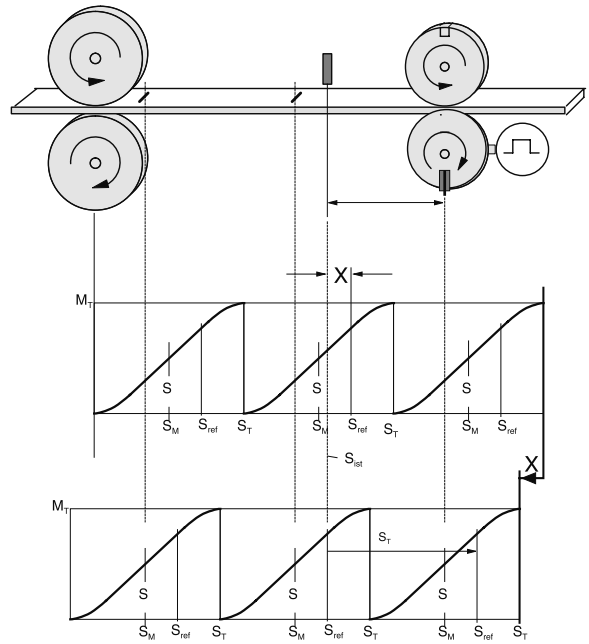

Cam switching mechanism

- 36 cams with individual profiles
- 4 fast cams (125 µs per cam) standard: 500 µs
- 32 serial cams, 16 ms/cam cycle (0.5 ms/cam)
- Delay-time compensated cams: Compax3 can advance the cam to compensate for delays in switching elements.

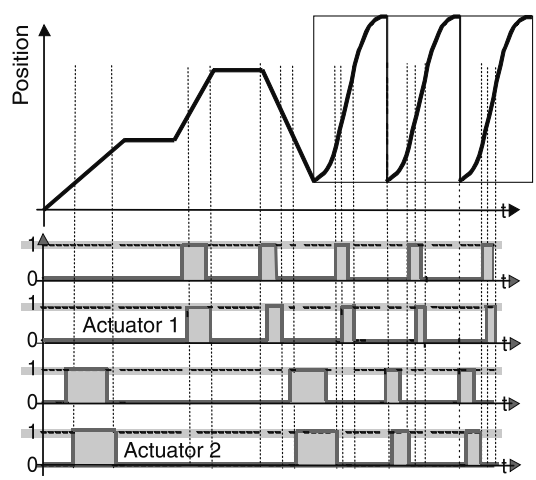

Coupling and decoupling functions

- By means of a set point generator
- By means of a change-over function
- Without overspeeding by coupling over several master cycles
- Virtually free set-up of the coupling and decoupling movement
- Master-guided coupling movement
- Random standstill position

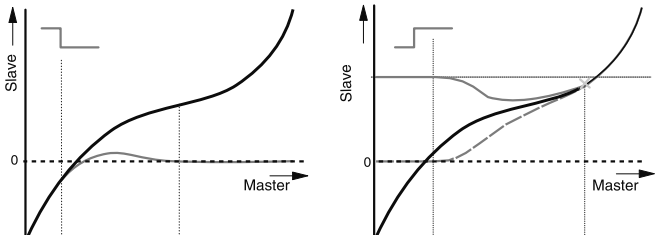

Cam profiles

- Up to 20 cam segments can be produced by:
- Virtually random cam links (forwards and backwards)
- Freely programmable event-controlled cam branches
- Scalable cam segments and complete cam profiles

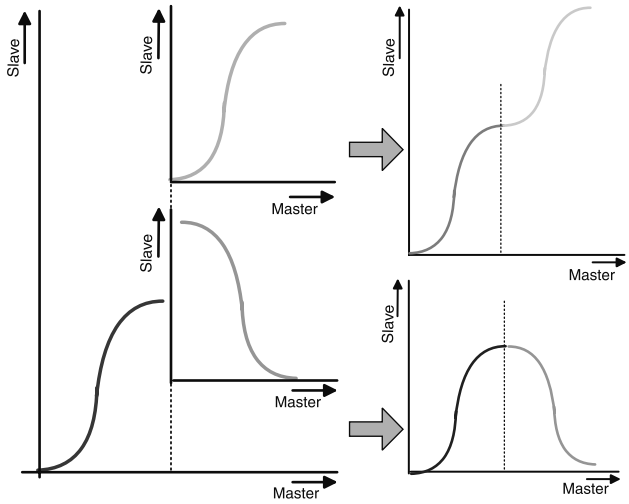

Cam memory

- 10,000 points (Master/Slave) in 24-bit format
- High-precision profile generation:
  - Variable point spacing with full backup of the current-master and slave coordinates (even if the power fails)
  - Linear interpolation between points
- Cam memory for up to 20 curves

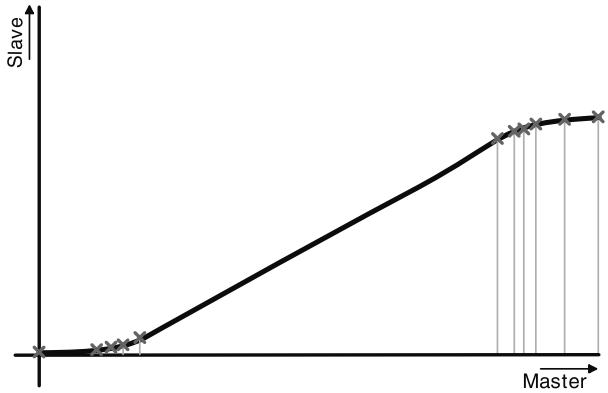

11

Connection of high-level controllers

a) Control via digital inputs/outputs Compax3 I11T30 / I11T40 / I12T11

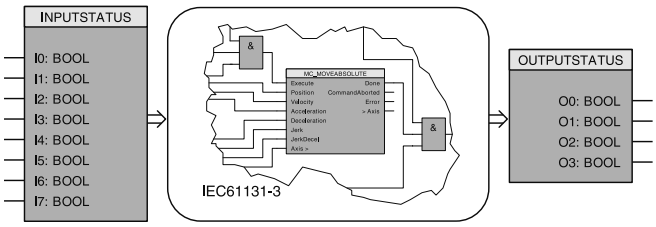

The digital I/Os can be optionally extended by 12 I/Os (M10 and M12 option).

b) Control via Profibus, Compax3 I20T11 / I20T30 / I20T40

Profibus-ratings	
DP-Versions	DPV0 / DPV1
Baud rate [MBit/s]	up to 12
Profibus ID	C320

c) Control via CANopen, Compax3 I21T30 / I21T40

CANopen-ratings	
Baud rate [kBit/s]	20, 50, 100, 125, 250, 500, 800, 1000
Service-Data-Object	SDO1
Process-Data-Objects	PDO1, ... PDO4

d) Control via DeviceNet, Compax3 I22T30 / I22T40

DeviceNet-ratings	
I/O - data	up to 32 bytes
Baud rate [kBit/s]	125...500
Nodes	up to 63 Slaves

e) Control via Ethernet Powerlink, Compax3 I30T30 / I30T40

Ethernet Powerlink ratings	
Baud rate	100 Mbits (FastEthernet)
Cycle time	<200 µs; to 240 nodes

f) Control via EtherCAT Compax3 I31T30 / I31T40

EtherCAT-ratings	
Bau drate	100 Mbits (FastEthernet)
Cycle time	<200 µs; to 240 nodes

g) Control via Profinet I32T11 / I32T30 / I32T40

Profinet ratings	
Profinet version	Profinet IO (RT)
Transmission mode	100 BASE-TX (Full Duplex)
Profinet ID	C332

h) Decentralized control via CANopen, I21T30 / I21T40 With external inputs/outputs (PIO)

Additional external digital and analog inputs and outputs can be integrated via the CANopen master function. For this purpose we offer the Parker I/O system (PIO):

- CANopen field bus coupler: 650 mA/5 V, 1650 mA/5 V
- Digital input terminals: 2-, 4-, and 8-channel
- Analog input terminals: 2-channel (0-10 V), 4-channel (0-20 mA)
- Digital output terminals: 2-, 4-, and 8-channel
- Analog output terminals: 2-channel (0-10 V, 0-20 mA, +/-10 V)

Software Tool C3 ServoManager

Configuration is carried out on a PC using the Compax3 ServoManager.

- Wizard-guided configuration
  - Automatic querying of all necessary entries
  - Graphically supported selection
- Setup mode
  - Moving individual axes
  - Predefined profiles
  - Convenient operation
  - Storage of defined profiles
  - Controller pre-setting possible
- Integrated 4-channel oscilloscope
  - Signal tracing directly on the PC
  - Various modes (single/normal/auto/roll)
  - Zoom function
  - Export as image or table (for example to Excel)

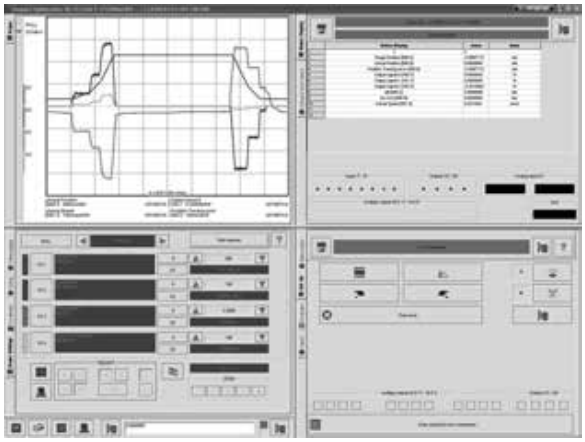

Software Tool HydraulicsManager

- Simple set up of customer valves, cylinders and drives.
- Technical data of all Parker valves, cylinders and drives available.

C3 HydraulicsManager valve database

Software Tool CamDesigner

- Standardized Nolte cam generating tool with:
  - Standard or extended range of functions
  - Evaluation of the motion profiles
  - Verification of the drive sizing
- Transition laws from VDI directive 2143:
  - Selection of motion laws
  - The CamDesigner basic version features 15 motion laws (based on the dwell-to-dwell (interpolation method)

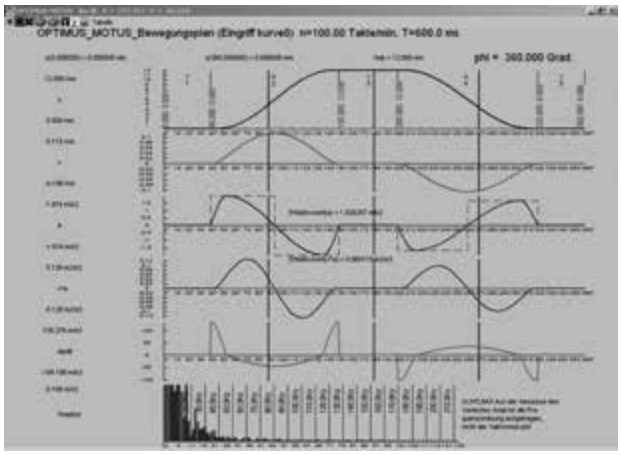

Evaluation of the motion profile

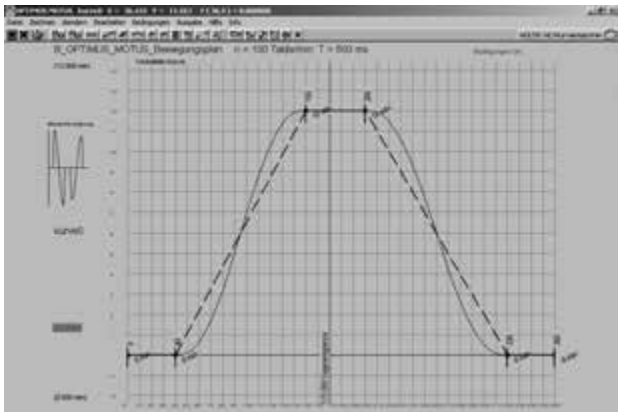

Cam generation with the integrated CamEditor

11

IEC61131-3 Programming language

IEC61131-3 is the only company- and product-independent programming language with worldwide support for industrial automation devices.

- IEC61131-3 includes graphical and textual programming languages:
  - Instruction list
  - Structured text
  - Ladder diagram
  - Sequential function chart
  - Function block diagram

Integrated standards offer:
- A trusted programming environment
- Standardized programming

Integrated standards reduce:
- The overhead of development
- Maintenance costs
- Software upkeep
- Training overhead

Integrated standards increase:
- Productivity
- Software quality
- Concentration on core competence

Examples

- Program development in IL

```
0001 FUNCTION_BLOCK AWL_EXAMPLE
0002 (* Sinus und CoSinus einer Zahl berechnen *)
0003 VAR_INPUT
0004     r1: REAL := 0.0;
0005 END_VAR
0006 VAR_OUTPUT
0007     sinus: REAL;
0008     cosinus: REAL := 9.9;
0009 END_VAR
```

```
0001     (* Den Sinus einer Zahl berechnen und mit 1000 multiplizieren *)
0002     LD      r1
0003     SIN
0004     MUL         1000.0
0005     ST      sinus
0006     (* Den Cosinus  einer Zahl berechnen und mit 1000 multiplizieren *)
0007     LD      r1
0008     COS
0009     MUL         1000.0
0010     ST      cosinus
0011
0012     (* Die Zahl weiterschalten *)
0013     LD      r1
0014     ADD         0.1
0015     ST      r1
0016
```

- Instruction list (IL)

LD	A
ANDN	B
ST	C

- Ladder diagram

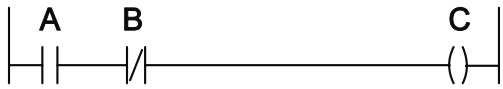

- Structured text

C := A AND NOT B

- Function plan

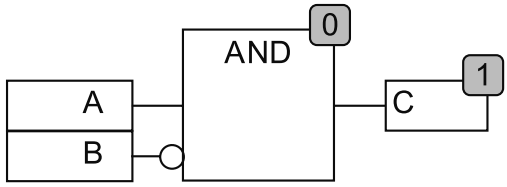

11

Function modules based on PLCopen

PLCopen is a product- and company independent organization that plays a significant role in supporting the IEC61131-3 programming language. Its specific tasks also include defining basic processes relevant to motion. The PLCopen organization consists of both users and manufacturers of automation components.

Parker Hannifin is an active member of the “Motion Control“ task force. This is a great advantage for the users of Parker drive technology, since they are constantly able to profit directly from the latest developments in PLCopen.

Professional development tool CoDeSys

CoDeSys is a development environment for programming that saves a significant amount of time as applications are created.

- One of the most powerful development environments available, established world-wide
- Universal programming platform for various devices
- Visual elements
- Library management for user-defined applications
- Context-sensitive help wizard
- Data exchange between devices from different manufacturers
- Complete online functionality
- Sophisticated technological features
- Standard function modules deposited

. . . and all this free of charge

Parker is a member of the “CoDeSys Automation Alliance“.

Program development in CFC

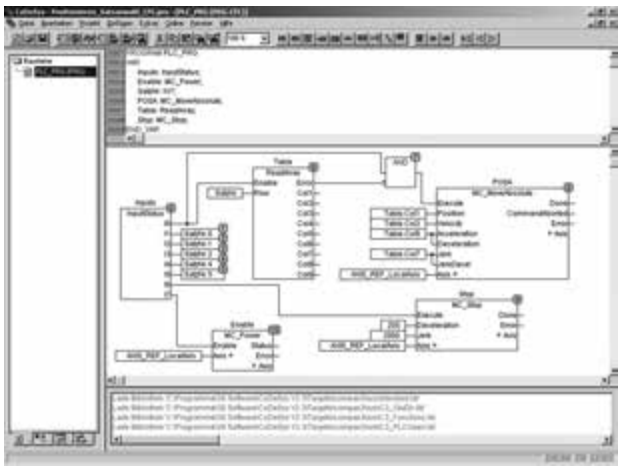

Project management

Saving an entire project (source file) including symbols and comments to make service calls easier, because there is no need for any project data on the device itself

- Archiving projects as ZIP files
- Creating user-specific libraries that can be reused as tested sections of programs
  - These libraries can be protected
  - Examples include winders, synchronization components etc.
- Various user levels make it possible to lock sections of the program with passwords
- Depending on the task at hand, users can select from among 5 IEC languages plus CFC. These languages can also be mixed

Connection set ZBH../.. (included in delivery)

Complete kit with mating plug connectors (X1, X2 and X3) for Compax3 connectors, special shield connecting terminal and snap-on foot for mounting rail.

Feedback cable GBK../..

Connection to the transducer:

Under the designation “REK.. + GBK..“ (Feedback cable) we can deliver feedback connecting cables in various lengths to order.

- Prefabricated with plug and cable eye
- The plugs of the feedback cables contain a special surface area screening.
- Cable plans, if you wish to make up your own cables

Terminal block EAM06/..

For additional wiring of the inputs and outputs:

- Available with or without LED display
- Can be mounted in the control cabinet on a supporting rail
- Connection EAM06/.. via SSK23/..to X11, SSK24/.. to X12

RS232 cable SSK01/..

(in various lengths).

Configuration:

Via a PC with the aid of the Compax3 ServoManager.

Communication:

Communication with Compax3 either via RS232 or via RS485 in order to read or write into objects.

Profibus plug BUS08/01

- BUS08/01 with 2 cable inputs (1x BUS08/01 incoming, 1x BUS08/01 continuing) and screw terminals, as well as a switch for activating the terminating resistor. Set to ON for first and last bus node terminating resistor activated.

Profibus cable: SSL01/.. not prefabricated

- Special cable in any length for Profibus wiring (colors according to DESINA).

Operating module BDM01/01

For display and diagnosis purposes:

- Can be plugged in during operation
- Power supply via Compax3 servo control
- For displaying and changing values

HEDA Bus

HEDA bus terminal connector (RJ45) BUS07/01:

- For the first and last Compax3 in the HEDA bus.

HEDA cable: SSK28/.. prefabricated in various lengths:

- Cable for HEDA bus wiring from Compax3-to-Compax3 or PC-to-Compax3 powerPLmC or wiring of
  - Ethernet Powerlink (I30)
  - EtherCAT (I51)
  - Profinet (I32)

CANbus plug BUS10/01

- BUS10/01 with 2 cable inputs (1x BUS10/01 incoming, 1x BUS10/01 continuing) and screw terminals, as well as a switch for activating the terminating resistor. Set to ON for first and last bus node terminating resistor activated

CANbus cable SSL02/.. not prefabricated

- Special cable in any length for CANbus wiring (colours according to DESINA)

External Inputs/Outputs PIO...

For Compax3 I21 from technology function T30 onwards via CANopen:

- Integration of additional external input and output modules (digital and analog)

Connection set for Compax 3										
for C3F001 D2 F12xxx	ZBH 02/04	Z	B	H	0	2	/		0	4
Operating module										
Operating module		B	D	M	0	1	/		0	1
Terminal block										
for I/Os without luminous indicator	for X11, X12	E	A	M	0	6	/		0	1
for I/Os with luminous indicator	for X12	E	A	M	0	6	/		0	2
Interface cables and connectors										
PC-Compax3 (RS232)		S	S	K	0	1	/		...	...[1)]
on X11/X13 (Transducer)	With flying leads	S	S	K	2	1	/		...	...[1)]
on X12 (I/O digital)	With flying leads	S	S	K	2	2	/		...	...[1)]
on X11(Ref/Analog)	For I/O terminal	S	S	K	2	3	/		...	...[1)]
on X12 (I/Os digital)	For I/O terminal	S	S	K	2	4	/		...	...[1)]
PC - POP (RS232)		S	S	K	2	5	/		...	...[1)]
Compax3 - POP (RS485)		S	S	K	2	7	/	../	...	...[3)]
Compax3 HEDA - Compax3 HEDA or PC - C3powerPLmC or Ethernet Powerlink (I30), EtherCAT (I31), Profinet (I32)		S	S	K	2	8	/		...	...[2)]
Compax3 X11 - Compax3 X11 (Encoder coupling of 2 axes)		S	S	K	2	9	/		...	...[1)]
HEDA bus terminal connector (for the 1st and the last Compax3 in the HEDA Bus)		B	U	S	0	7	/		0	1
Feedback cable for Balluff SSI transducer and start/stop		G	B	K	4	0	/		...	...[1)]
Feedback cable for SSI transducer and start/stop	With flying leads	G	B	K	5	3	/		...	...[1)]
Profibus cable [4)]	Not prefabricated	S	S	L	0	1	/		...	...[1)]
Profibus connector		B	U	S	0	8	/		0	1
CAN-Bus cable [4)]	Not prefabricated	S	S	L	0	2	/		...	...[1)]
CAN-Bus connector		B	U	S	1	0	/		0	1

Length code for SSK27

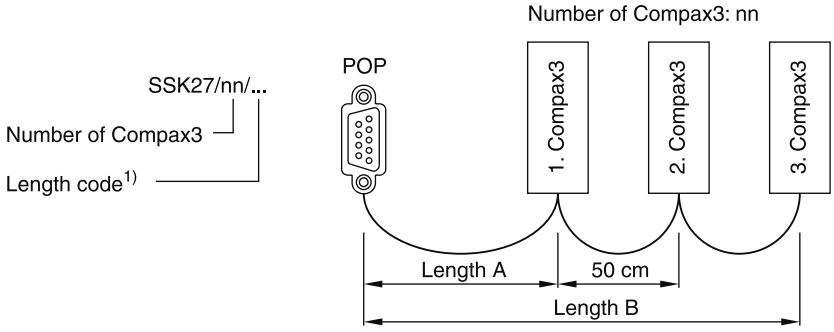

11

[1)] Length code

Length code 1 (Example: SSK01/09: Length 25 m)

Length [m]	1.0	2.5	5.0	7.5	10.0	12.5	15	20	25	30	50
Code	01	02	03	04	05	06	07	08	09	10	14

[2)] Length code for SSK28

Length code 2 (Example: SSK28/22: Length 3 m)

Length [m]	0.25	0.5	1.0	3.0	5.0	10.0
Code	20	21	01	22	03	05

[3)] Length code for SSK27

Length A: Cable or connection from POP with **one** Compax3 (POP - 1.Compax3), variable length according to length code[1)]
(Example: SSK27/01/01: Length 1.0 m)

Length B: Cable or connection from POP with **more than one** Compax3 (nn > 01) (1.Compax3 - 2.Compax3 - …), length between Compax connectors is fixed to 50 cm, variable length A from POP with first Compax according to length code[1)]
(Example: SSK27/03/01: Length 1.0 m)

[4)] Colours according to DESINA

Decentralized Input terminals								
PIO 2DI 24 VDC 3.0 ms	2-Channel Digital-Input terminal		P	I	O	4	0	0
PIO 4DI 24 VDC 3.0 ms	4-Channel Digital-Input terminal		P	I	O	4	0	2
PIO 8DI 24 VDC 3.0 ms	8-Channel Digital-Input terminal		P	I	O	4	3	0
PIO 2AI DC ±10 V	2-Channel Analog-Input terminal	(± 10 V Differential input)	P	I	O	4	5	6
PIO 4AI 0-10 V DC S.E.	4-Channel Analog-Input terminal	(0-10 V Signal voltage)	P	I	O	4	6	8
PIO 2AI 0-20 mA	2-Channel Analog-Input terminal	(0 - 20 mA Differential input)	P	I	O	4	8	0
Decentralized Output terminals								
PIO 2DO 24 VDC 0.5 A	2-Channel Digital-Output terminal	(Output current 0.5 A)	P	I	O	5	0	1
PIO 4DO 24 VDC 0.5 A	4-Channel Digital-Output terminal	(Output current 0.5 A)	P	I	O	5	0	4
PIO 8DO 24 VDC 0.5 A	8-Channel Digital-Output terminal	(Output current 0.5 A)	P	I	O	5	3	0
PIO 2AO 0-10 VDC	2-Channel Analog-Output terminal	(0-10 V Signal voltage)	P	I	O	5	5	0
PIO 4AO 0-20 mA	2-Channel Analog-Output terminal	(0-20 mA Signal voltage)	P	I	O	5	5	2
PIO 2AO DC ±10 V	2-Channel Analog-Output terminal	(±10 V Signal voltage)	P	I	O	5	5	6
CANopen Fieldbus coupler								
CANopen Standard			P	I	O	3	3	7
CANopen ECO			P	I	O	3	4	7

The test unit EX00-M05 is suitable for testing and commissioning of all proportional and servo proportional valves with onboard electronics that are offered in this catalogue. For easy on-site service all necessary cables are securely located inside of the rugged case. The test unit provides all command signal sources and measuring ports for concerted and time saving control and diagnosis of the valves. For operation of the hybrid regenerative valves an additional switchable 24 V output is available.

Features

- Control of valves incorporating integrated electronics and central plug acc. EN 175201-804 (6-pin + PE)
- Built-in fuses
- Cable set included
- Lockable rugged box

Ordering code

EX	00	–	M05	–	10
Test unit					Design series

CE

Technical data

Design			Lockable rugged box, polypropylene (break proof)	
Supply voltage		[V]	85...260, 50...60 Hz	
Power consumption		[VA]	max. 160	
Current consumption max.		[A]	1.3 at 230 V	
Main input fuse		[A]	3.15 time lag	
Required main supply fuse		[A]	16	
Protection class			IP40	
EMC			EN 61000-6-2	
Valve central connection	Valve supply	[V]	24 (±5 %)	
	Command voltage	[V]	0...±10 (±1 %), 0...10, 0...±20 mA, 0...20 mA, 4...12...20 mA, 4...20 mA	
	Diagnostic output		0...±10 V / 0...±20 mA	
	Enable signal	[V]	7.5 (±10 %)	
Measurement terminals			For multimeter with Ri min = 10 kOhm	
Display	Display digits		4	
	Resolution		10 mV / 10 mA ; 1 digit	
Main cord	Unit site		Cable inlet connector IEC320	
	Main site		CEE 7/7 plug	
	Cable length	[m]	2	
Valve cords			A - control valves	B - DC valves
	Unit site		Connector Amphenol SV70 DIN 40040	acc. EN175301-803
	Valve site		Connector 6+PE acc. EN175201-804	M12x1 as per IEC61076-2-101
	Cable length	[m]	3	
Ambient temperature		[°C]	0...40	
Weight		[kg]	3.9	
Dimensions		[mm]	L 305 x B 270 x H 144	

Operator panel

Front

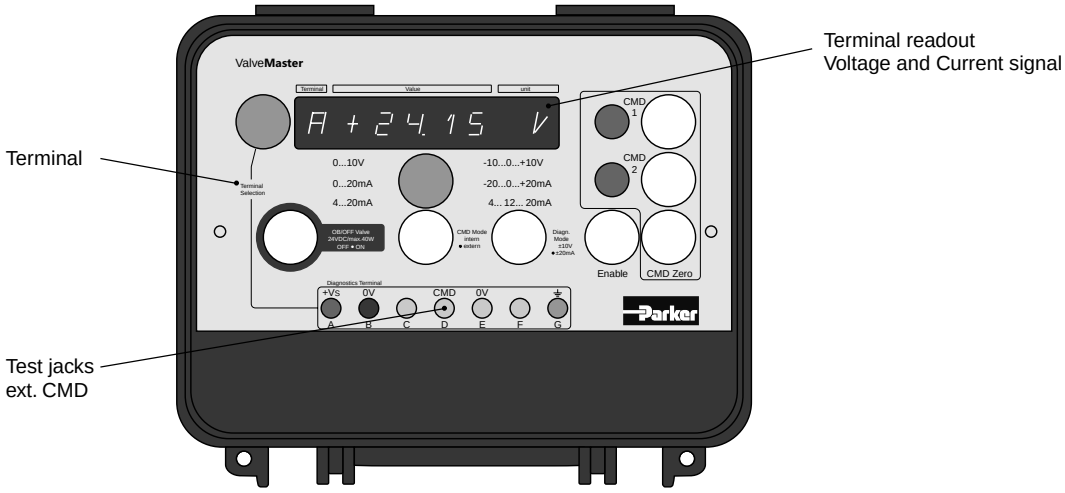

Rear

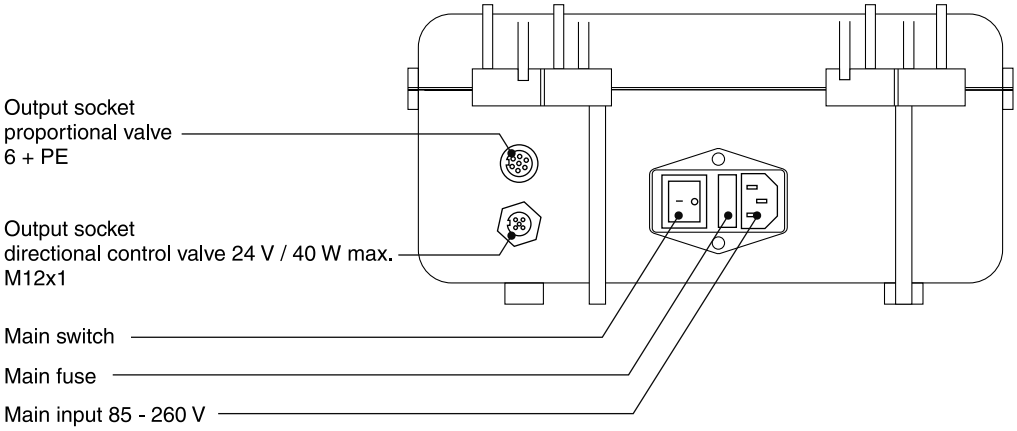

Wiring configuration

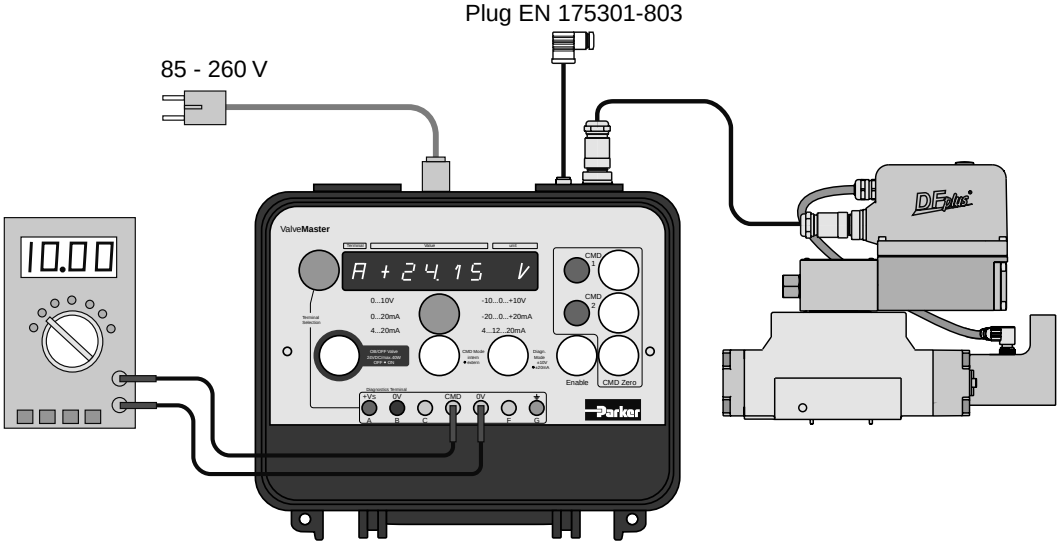

Notes

Series	Description	Size									Page
	DIN / ISO	06	10	16	25	32	40	50	63	80	
	Subplates										
SPD	Subplates, BSPP threads, DC valves	•	•	•	•						12-2
A	Subplates, metric threads, DC valves	•	•								12-7
SPP	Subplates, BSPP threads, pressure valves, DIN / ISO		•		•	•					12-8
A102	Subplates for pressure valves, styles VB and VM		•								12-11
MSP	Multi-station manifold, DC valves	•	•								12-12
	Cover, sandwich and adaptor plates										
	Symbols										12-19
PADA	Sandwich and adaptor plates	•	•								12-21
H06	Sandwich plates	•									12-22
CS06	Sandwich and cover plates	•									12-26
D51*	Cover plates	•	•								12-28
CB	Cartridge manifold block			•	•	•	•	•	•	•	12-30
	Plates for regenerative- and hybrid circuits, series D3DW, D3FB/FP, D31NW/FB/FC/FP										
	Intro										12-32
A10	Adaptor plates size 10		•								12-34
H10	Sandwich plates size 10		•								12-36
	Accessories for manifolds and systems										
BK	Bolt kits										12-38
TK	Tie rod kits										12-39
	Pressure gauge valves										
WM	Pressure gauge selector valve										12-40
	Pressure switches										
PSB	Pressure switches										12-42
SCPSD	Electronic pressure switch										12-47
	Pressure intensifiers										
SD500	Pressure intensifiers										12-53

12

Valve size DIN NG06, CETOP 03, NFPA D03

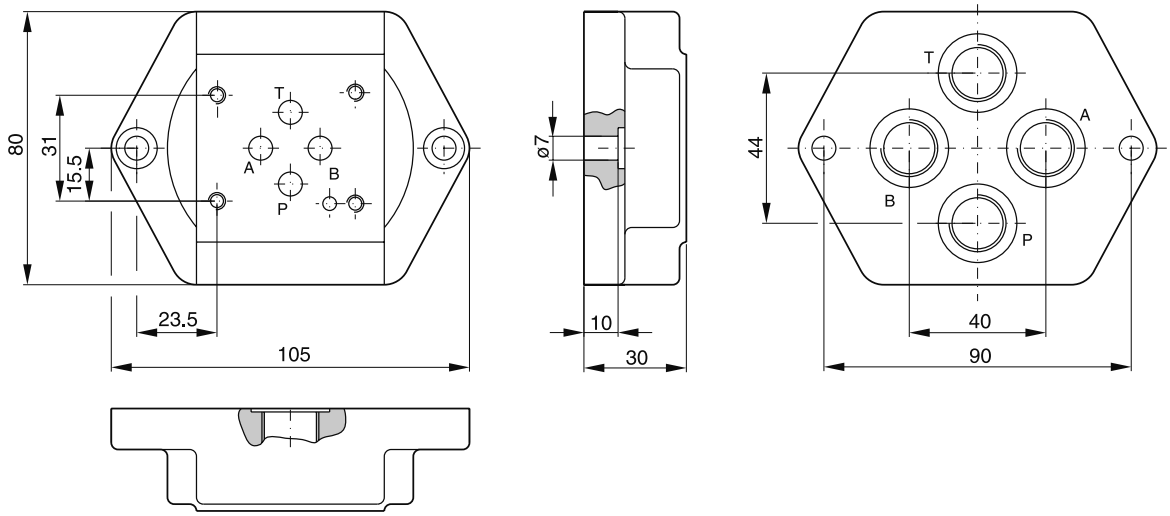

Ordering code	
SPD 22 B 910	P, A, B and T = G ¼
SPD 23 B 910	P, A, B and T = G ⅜

Valve size DIN NG06, CETOP 03, NFPA D03

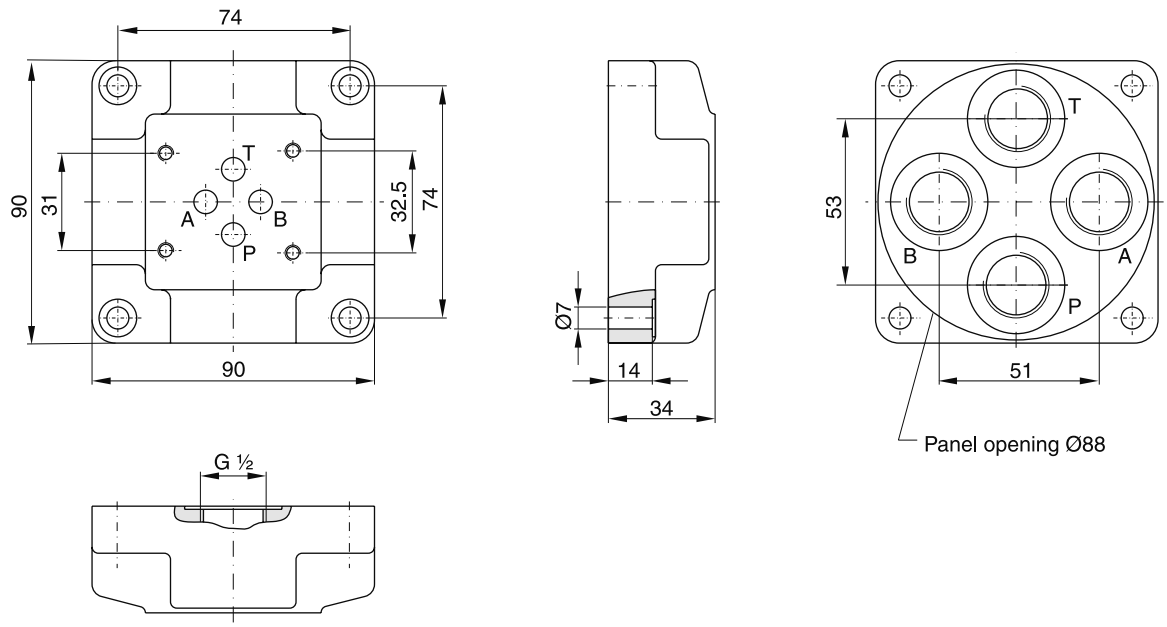

Ordering code	
SPD 24 B 910	P, A, B and T = G ½

Bold letters =
Short-term availability

Valve size DIN NG06, CETOP 03, NFPA D03

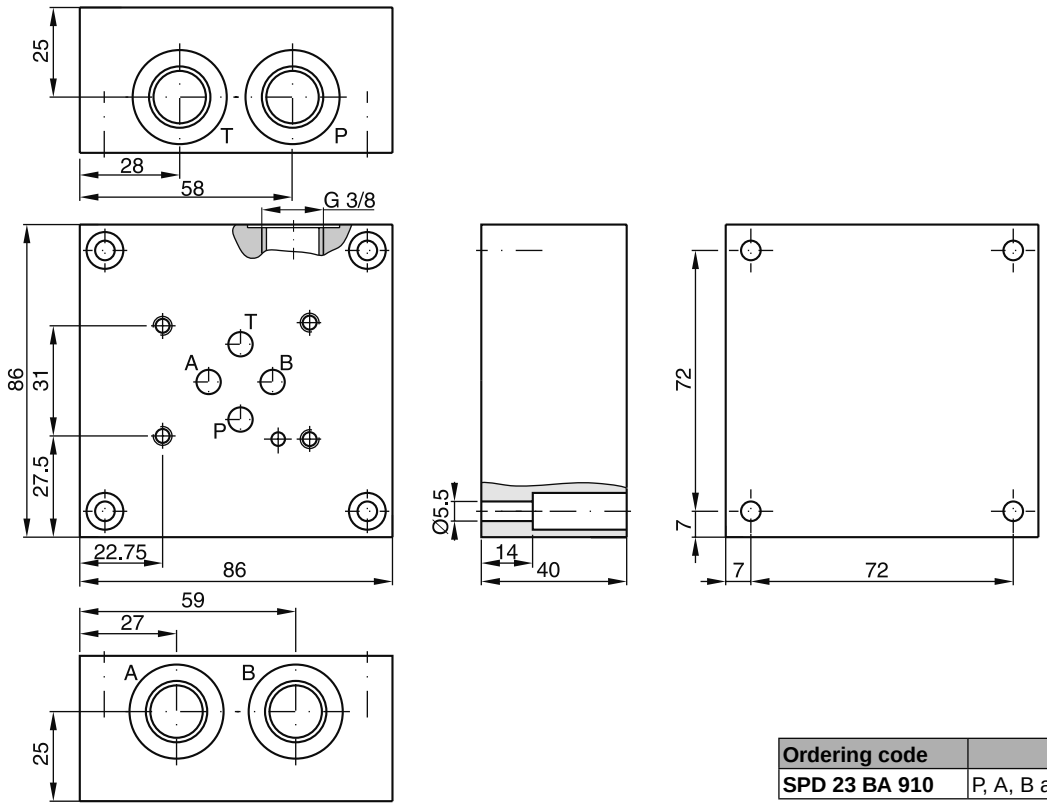

Ordering code	
SPD 23 BA 910	P, A, B and T = G ⅜

Valve size DIN NG10, CETOP 05, NFPA D05

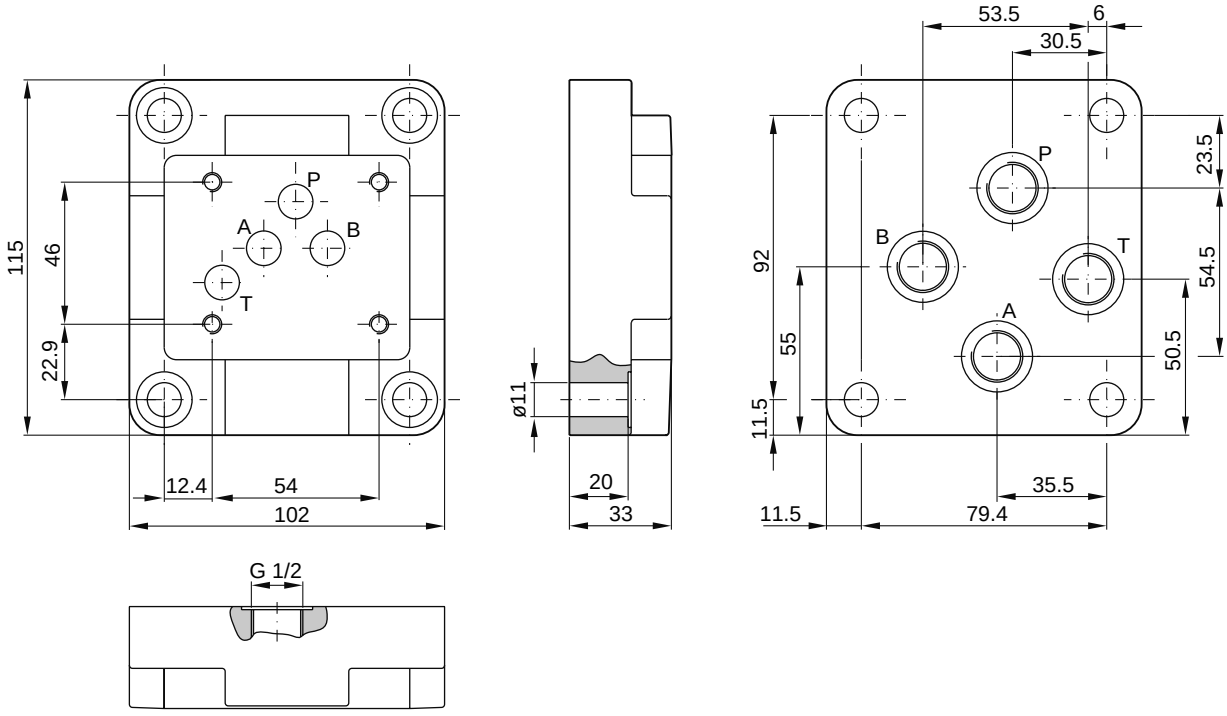

Ordering code	
SPD 34 B 920	P, A, B and T = G ½

Bold letters =
Short-term availability

Valve size DIN NG10, CETOP 05, NFPA D05

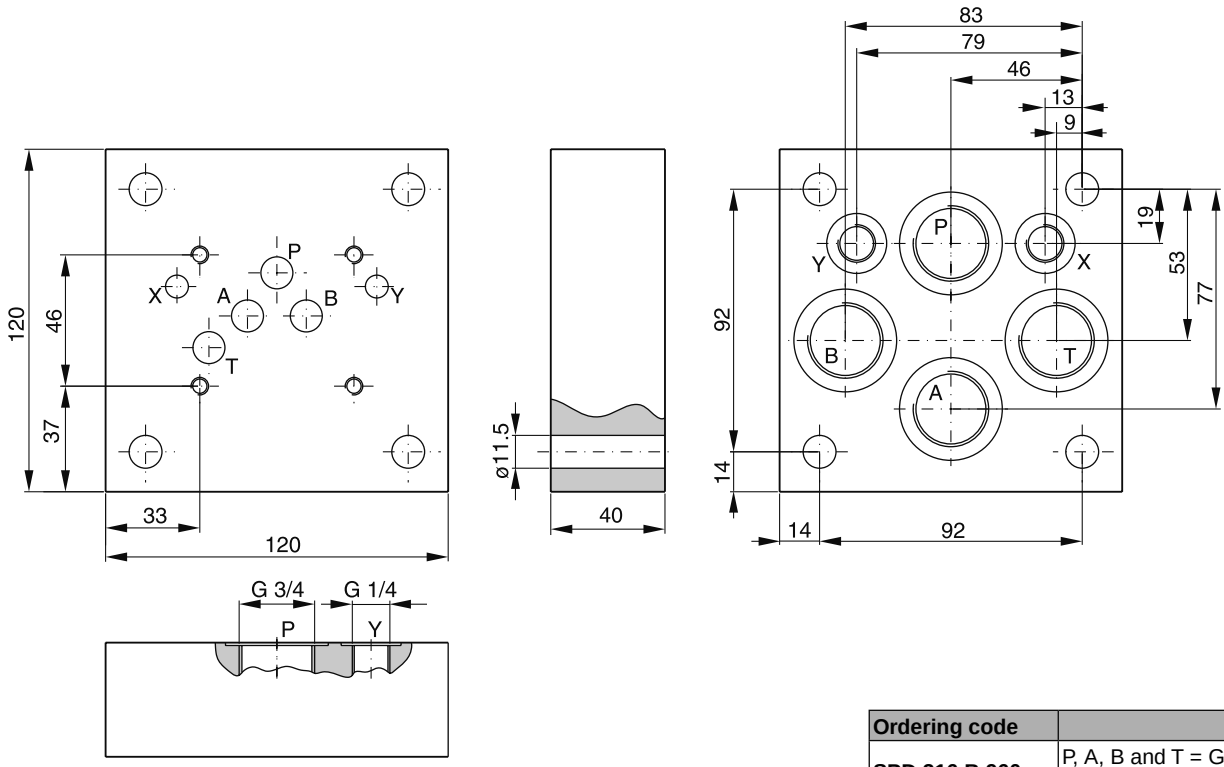

Ordering code	
SPD 316 B 960	P, A, B and T = G ¾ X and Y = G ¼

Valve size DIN NG10, CETOP 05, NFPA D05

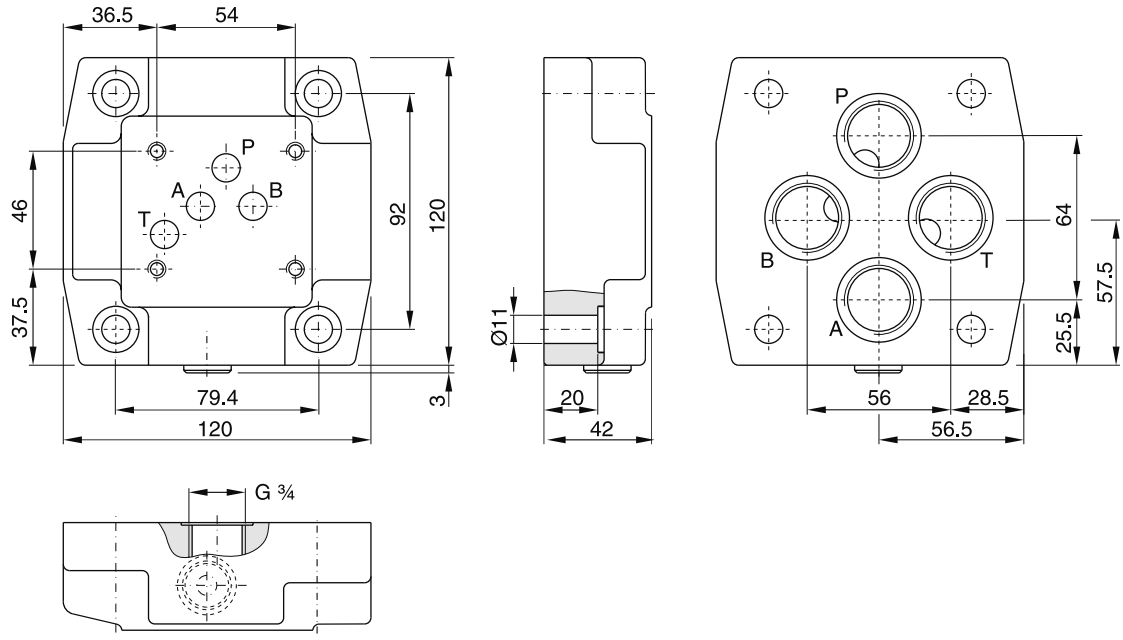

Ordering code	
SPD 36 B 920	P, A, B and T = G ¾

Bold letters =
Short-term availability

Valve size DIN NG16, CETOP 07, NFPA D07

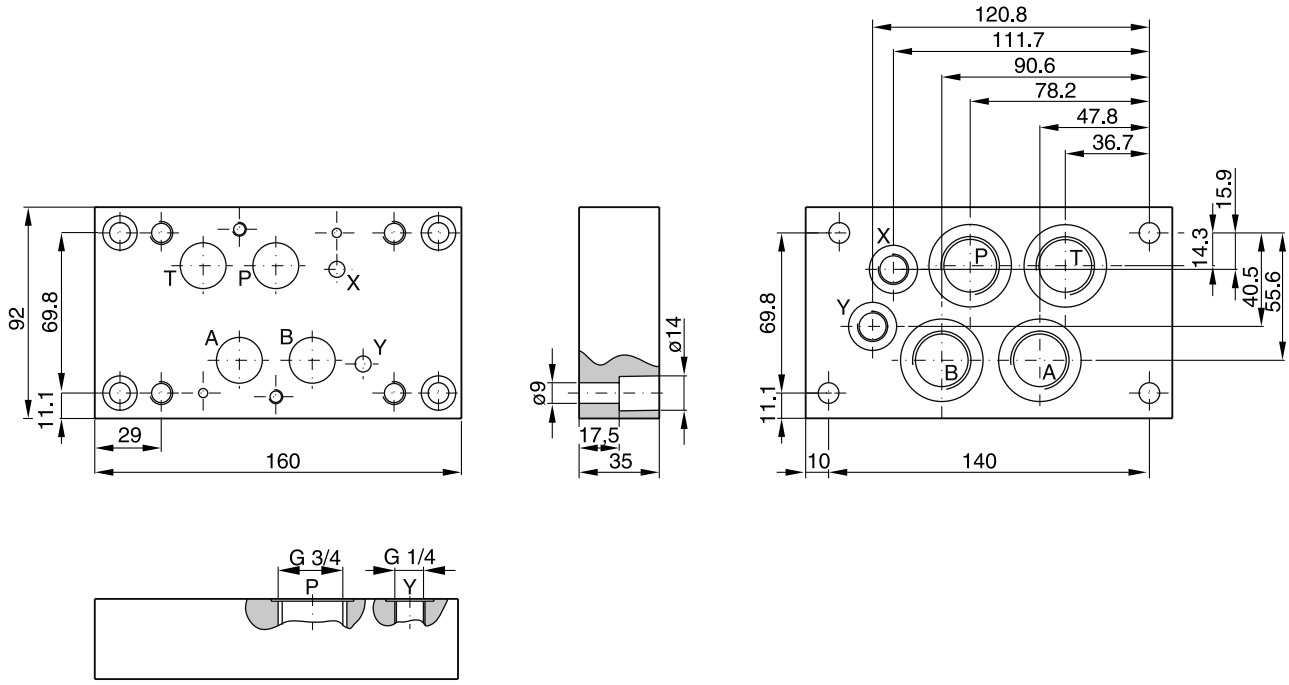

Ordering code	
SPD 46 B 910	P, A, B and T = G ¾ X and Y = G ¼

Valve size DIN NG16, CETOP 07, NFPA D07

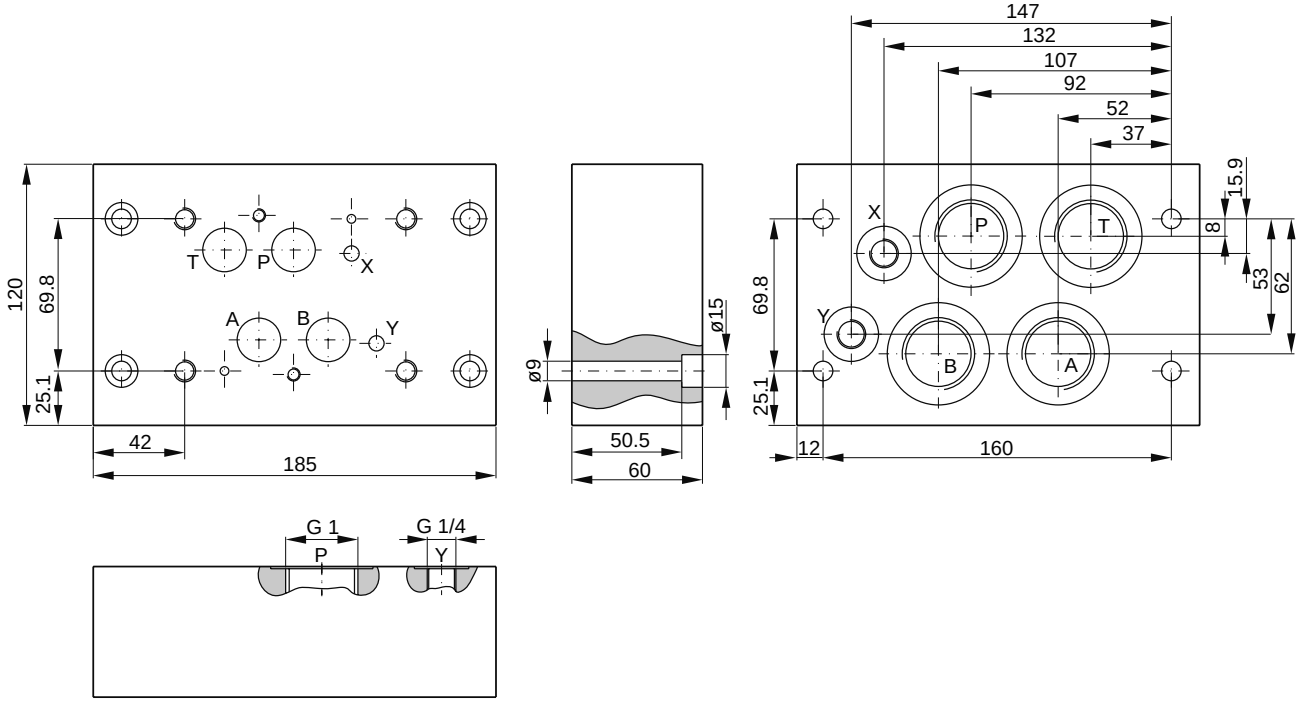

Ordering code	
SPD 48 B 910	P, A, B and T = G 1 X and Y = G ¼

Bold letters =
Short-term availability

Valve size DIN NG16, CETOP 07, NFPA D07

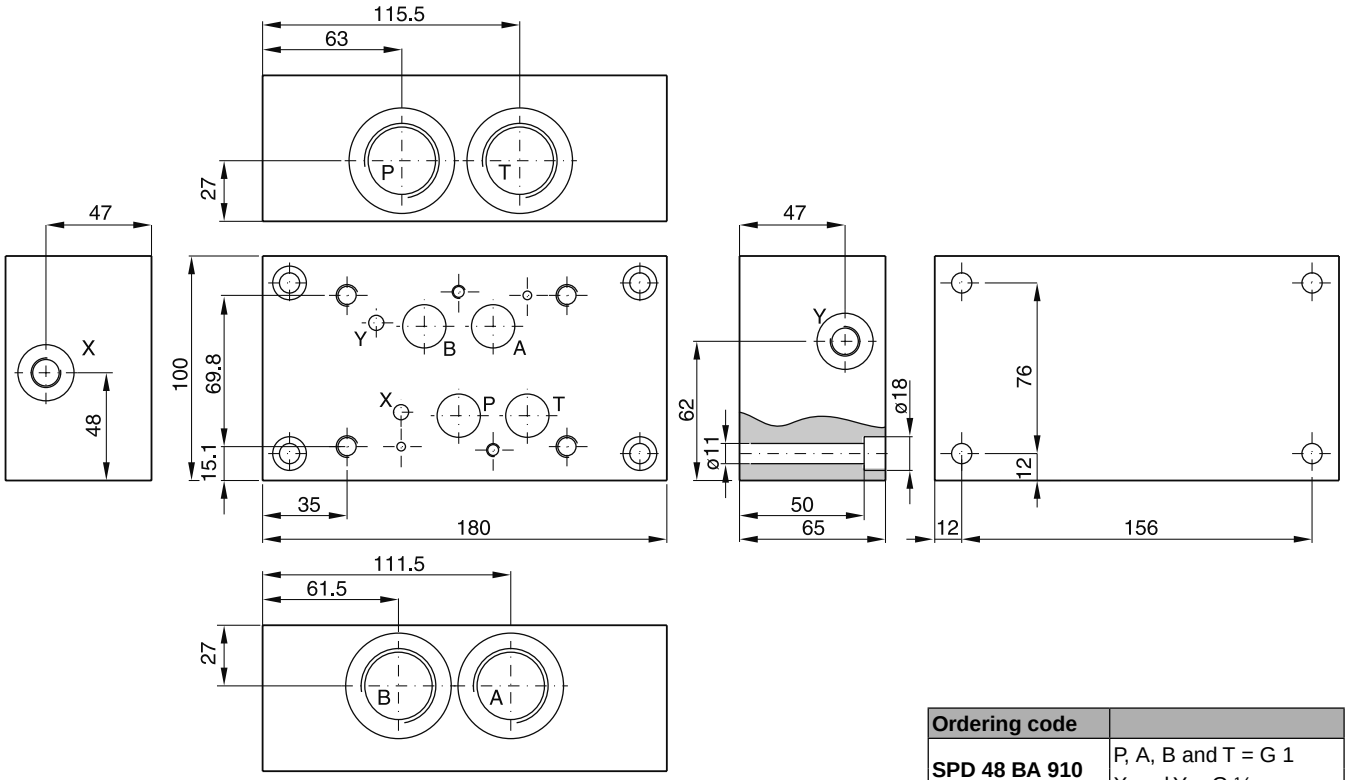

Ordering code	
SPD 48 BA 910	P, A, B and T = G 1 X and Y = G ¼

Valve size DIN NG25, CETOP 08, NFPA D08

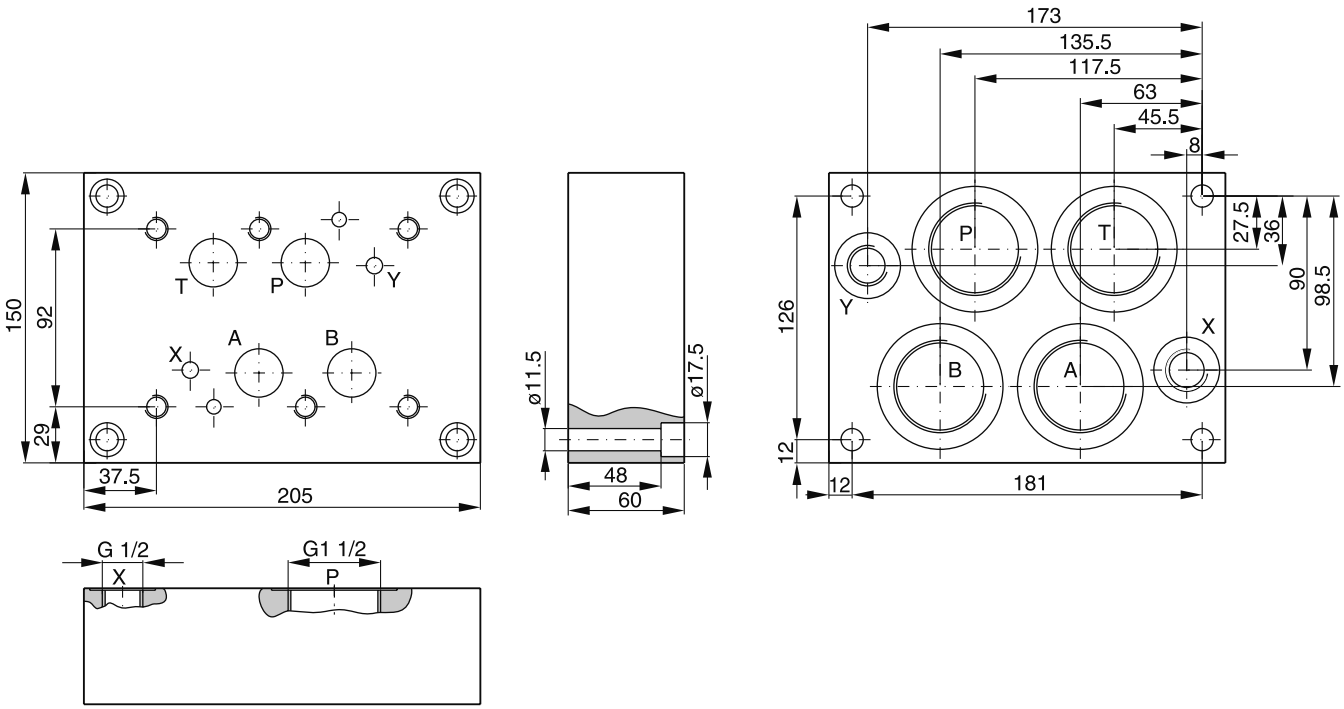

Ordering code	
SPD 612 B 930	P, A, B and T = G 1½ X and Y = G ½

Bold letters =
Short-term availability

Valve size DIN NG06, CETOP 03, NFPA D03

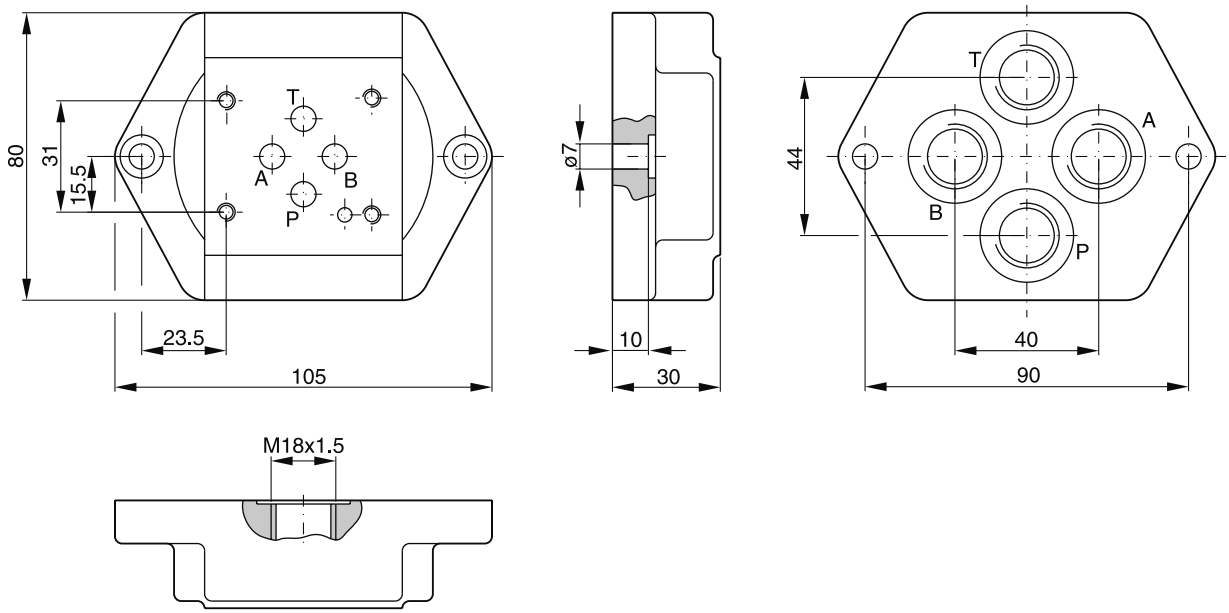

Order. code	
A 064 M	P, A, B and T = M18x1.5 as per ISO 6149

Valve size DIN NG10, CETOP 05, NFPA D05

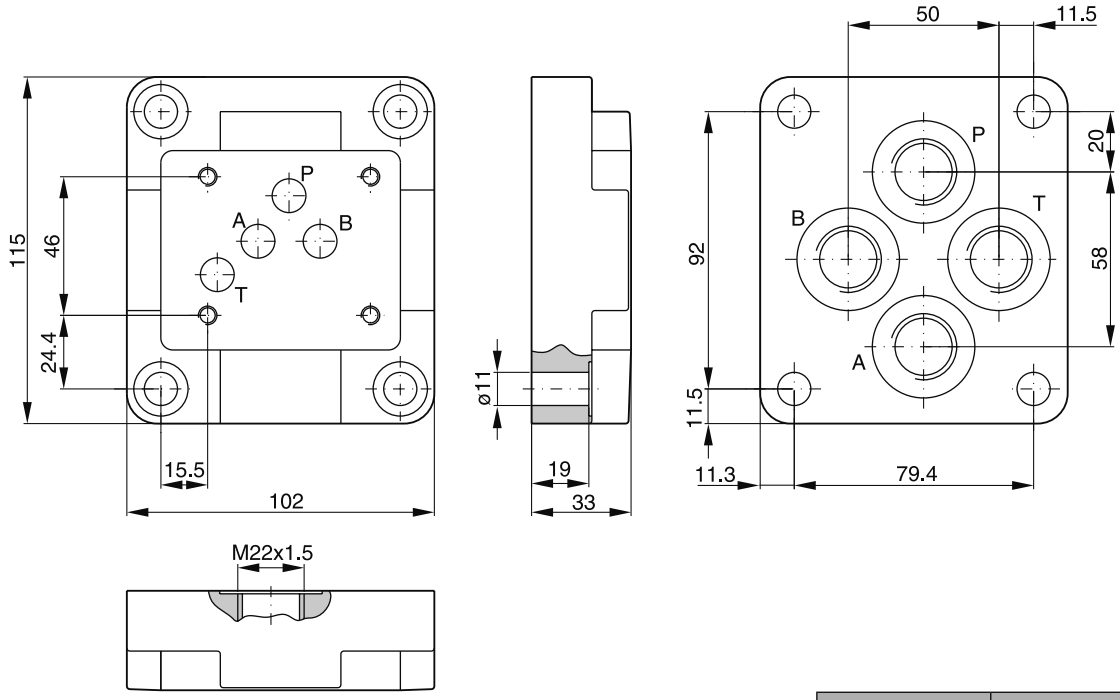

Order. code	
A 104 M	P, A, B and T = M22x1.5 as per ISO 6149

Bold letters =
Short-term availability

Valve size DIN NG10, ISO 6264-06-07-*-97, DIN 24340 form D / ISO 5781-06-07-0-00

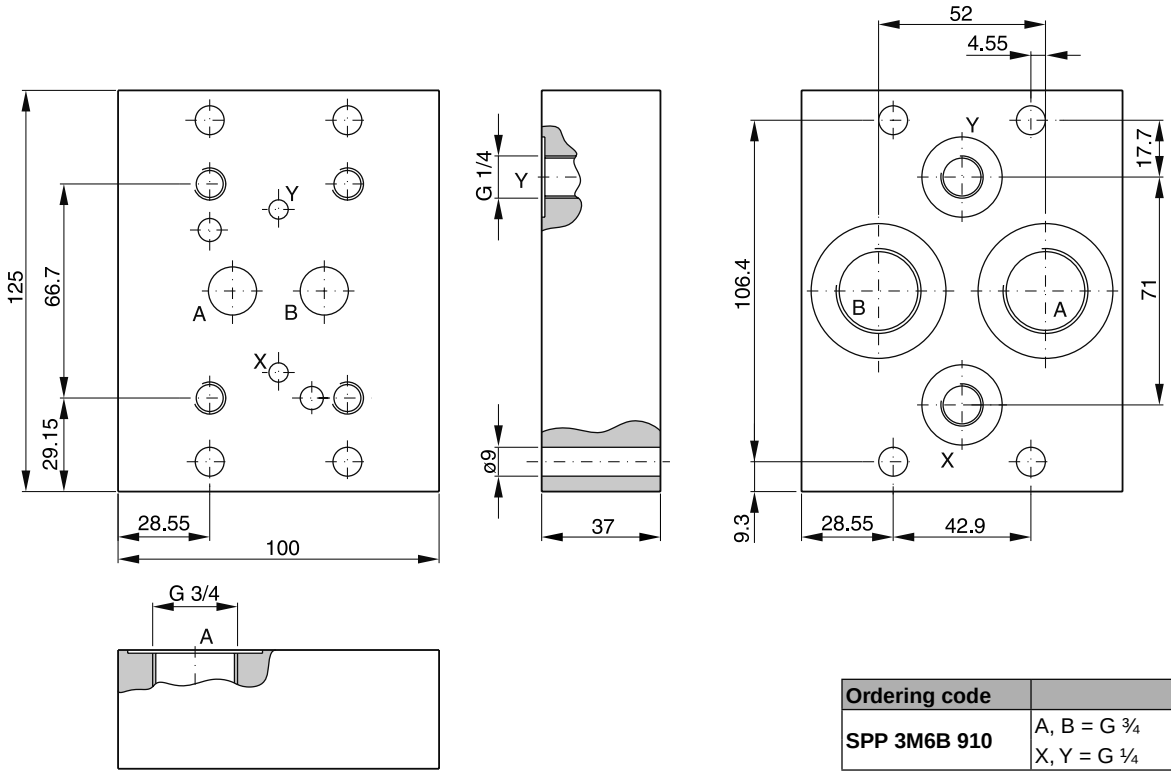

Ordering code	
SPP 3M6B 910	A, B = G ¾ X, Y = G ¼

Valve size DIN NG25, ISO 6264-08-11-*-97, DIN 24340 form D / ISO 5781-08-10-0-00

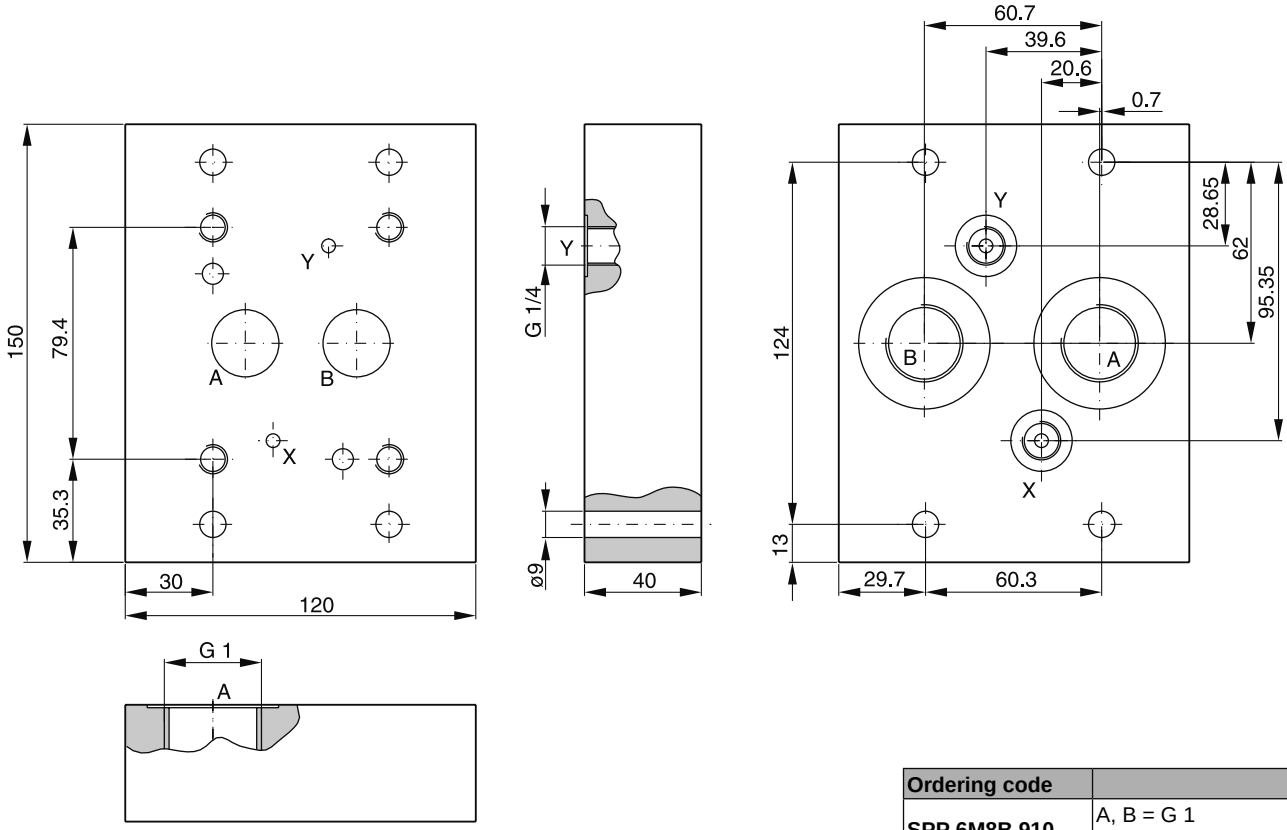

Ordering code	
SPP 6M8B 910	A, B = G 1 X, Y = G ¼

Bold letters =
Short-term availability

Valve size DIN NG32, ISO 6264-10-15-*-97, DIN 24340 form D / ISO 5781-10-13-0-00

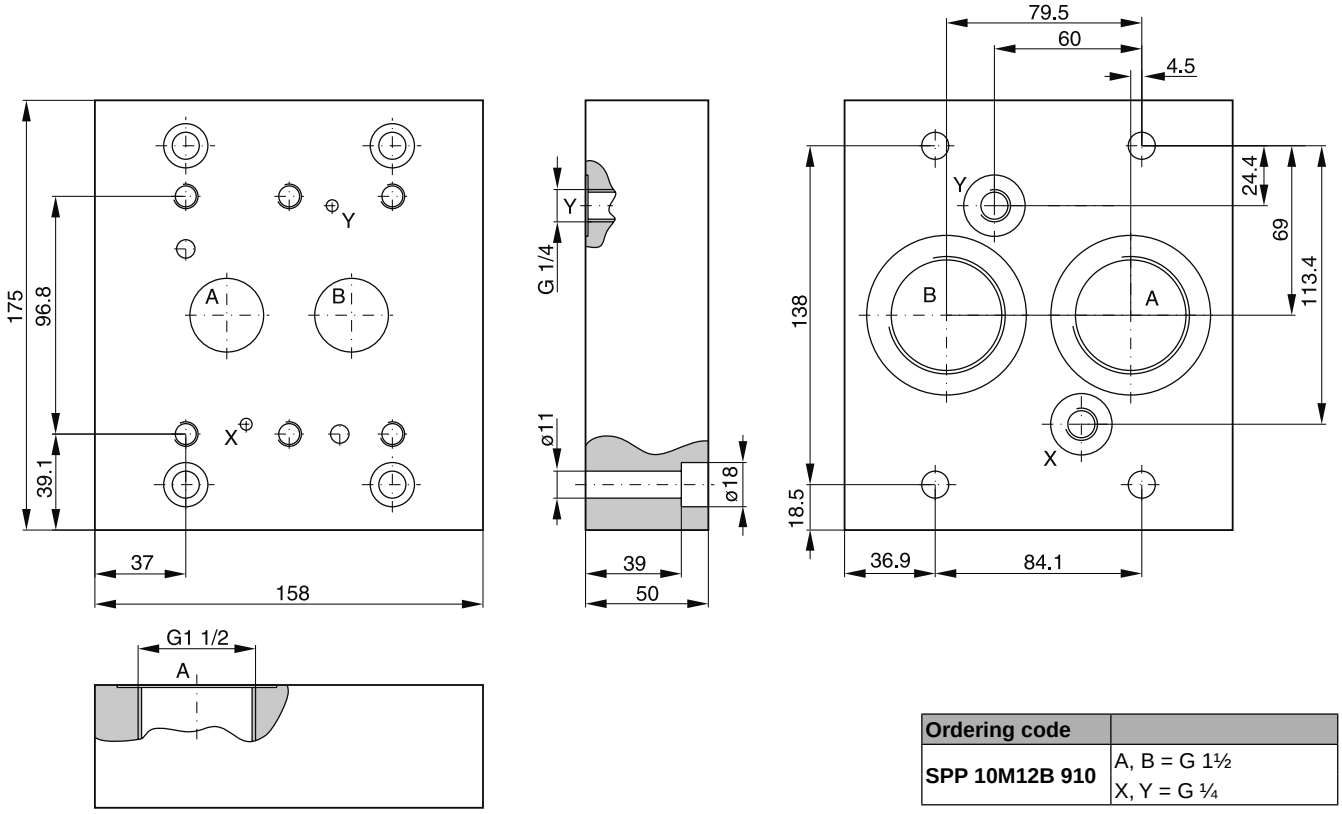

Ordering code	
SPP 10M12B 910	A, B = G 1½ X, Y = G ¼

Valve size DIN NG10, ISO 6264-06-09-*-97, DIN 24340 form E

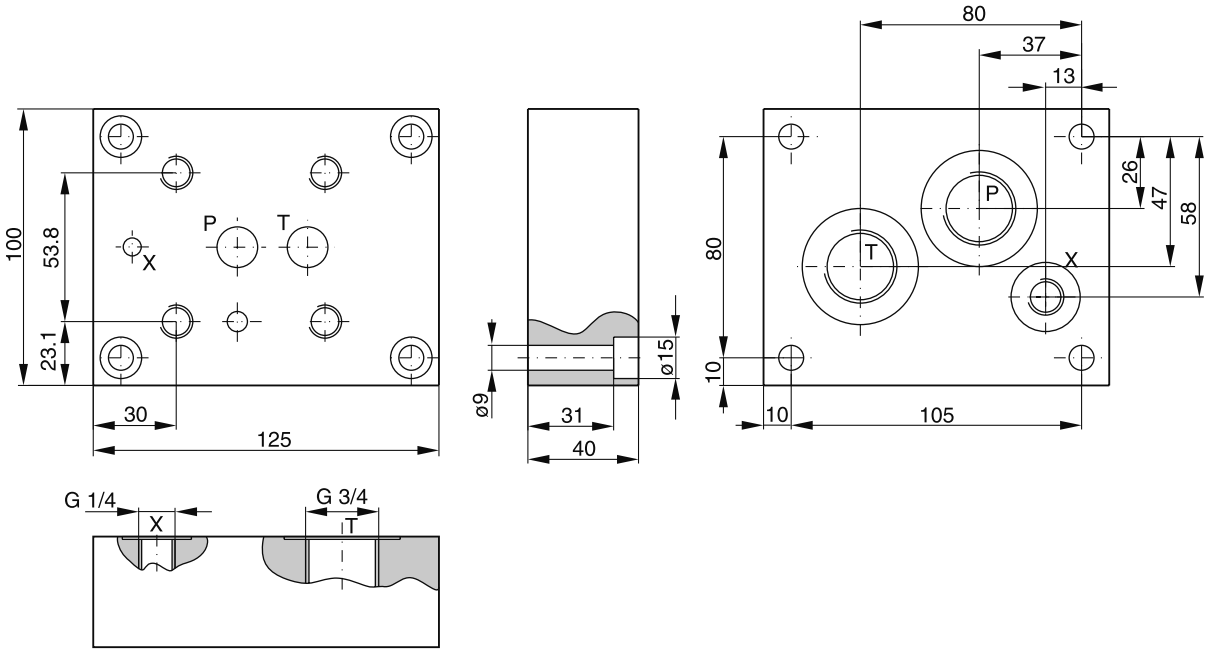

Ordering code	
SPP 3R6B 910	P, T = G ¾ X = G ¼

Bold letters =
Short-term availability

Valve size DIN NG25, ISO 6264-08-13-*-97, DIN 24340 form E

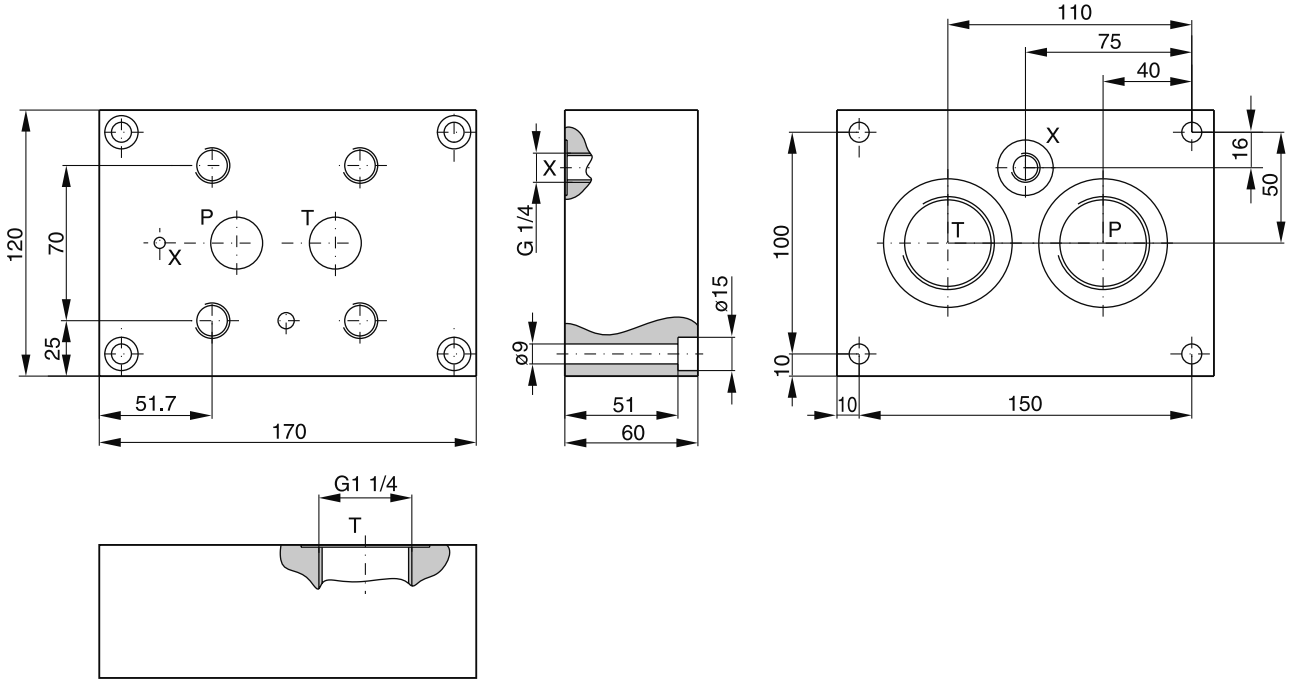

Ordering code	
SPP 6R10B 910	P, T = G 1¼ X = G ¼

Valve size DIN NG32, ISO 6264-10-17-*-97, DIN 24340 form E

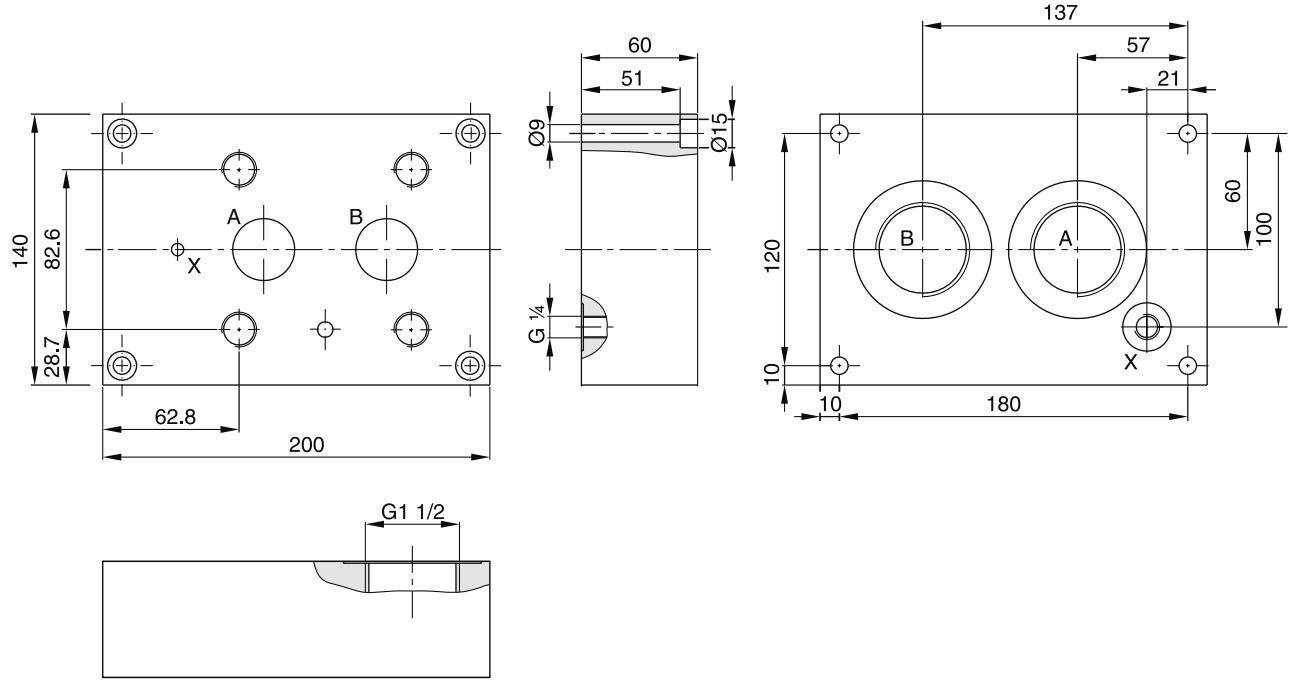

Ordering code	
SPP 10R12B 910	A, B = G 1½ X = G ¼

Bold letters =
Short-term availability

Valve size DIN NG10, for pressure valves VB and VM

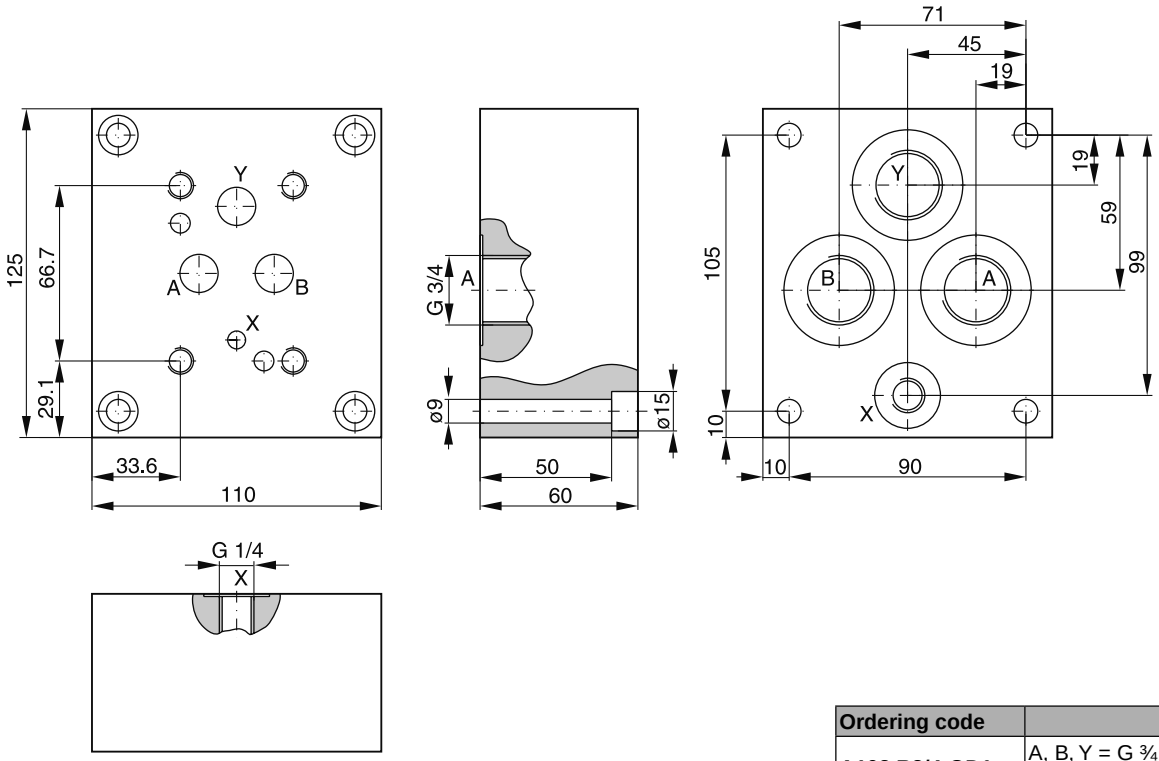

Ordering code	
A102 R3/4-OD1	A, B, Y = G ¾ X = ¼

Bold letters =
Short-term availability

Multi-station manifolds are used to save space when connecting several directional control valves to a common pressure and return line.

Diverse switching arrangements are possible in combination with sandwich and directional control valves. Plugs without designations must not be removed.

Features

- Very low pressure drop due to large drilling parameters
- P- and T-ports on both faces
- Also available with gauge ports G¼
- Separation in P or T channel optional - please consult your distributor

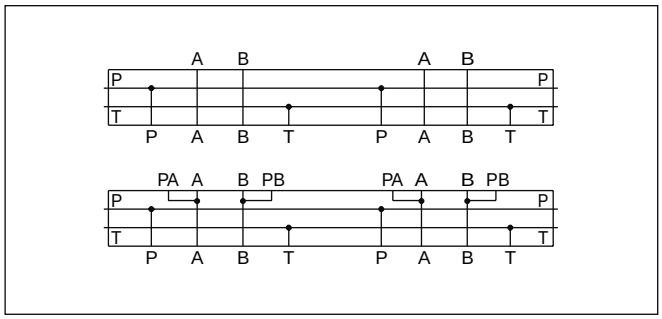

Ordering code

MSP				B		9		
Multiple subplate, standard	Stations	Nominal size	Port size	BSPP Port thread	Port location	Metric fastening screws	Design series	Gauge port

Code	Stations
1	**1**
2	**2**
3	**3**
4	**4**
5	**5**
6	**6**
7	**7**
8	**8**

Code	Size
D2	**NG06 / CETOP 03**
D3	**NG10 / CETOP 05**

Code	Gauge port
omit	**without**
C	Port G¼

Code	Design series
10	**CETOP 03, NG06**
30	**CETOP 05, NG10**

Code	Port location
omit	**A + B rear**
A	**A + B side**

Code	Port size
3	**CETOP 03 A + B = G 3/8 P + T = G 1/2**
4	**CETOP 05 A + B = G 1/2 P = G 3/4 T = G1**

Bold letters =
Short-term availability

12

Technical data

Interface	DIN 24340, Form A, CETOP, ISO
Mounting position	unrestricted (valve axis preferably horizontal)
Working pressure [bar]	max. 350

MSP UK.INDD CM 02.09.13

Parker Hannifin Corporation
Hydraulics Group

MSP*D23 B910*

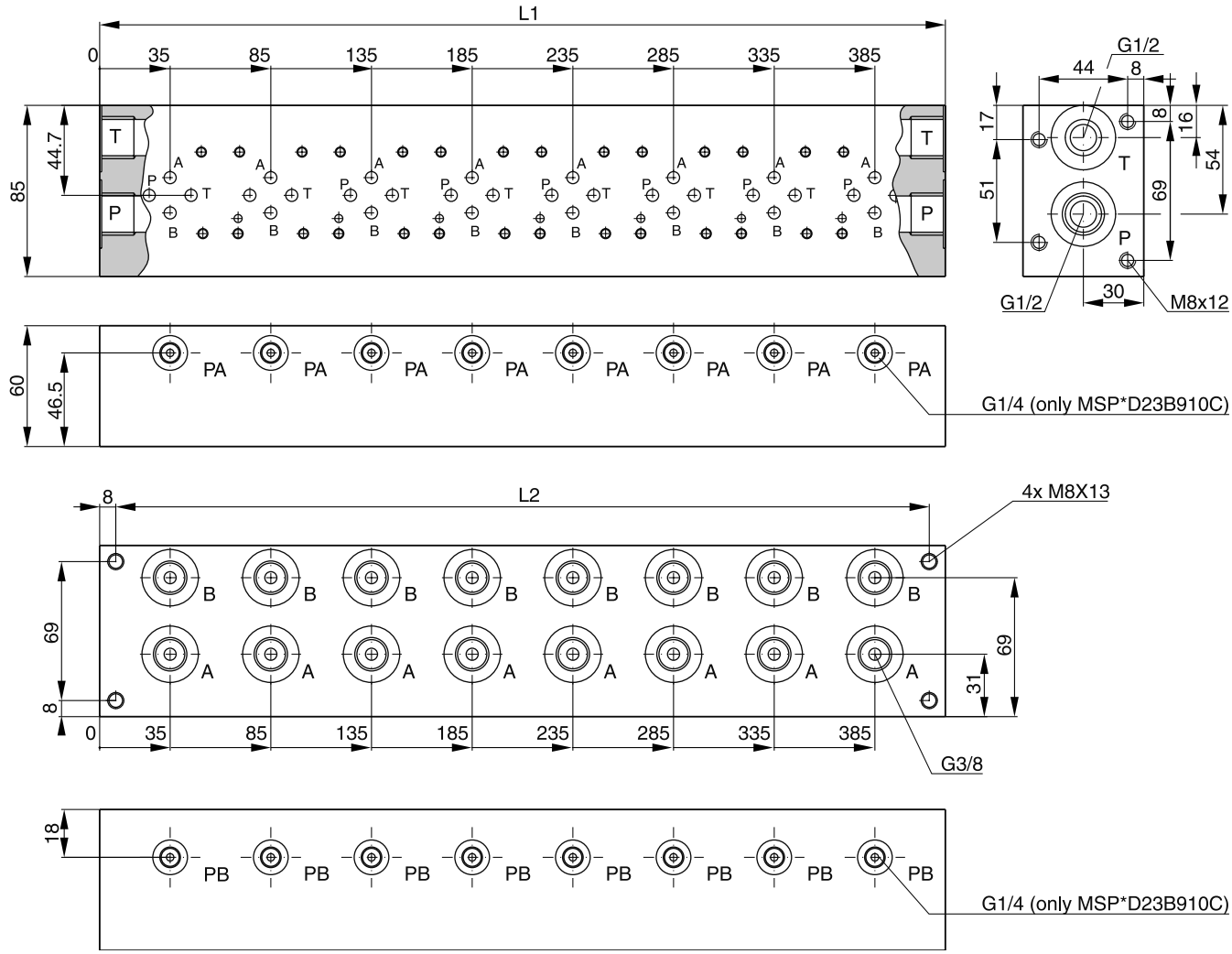

Code	Nominal size	Stations	L1 [mm]	L2 [mm]	Port		Gauge port	Weight [kg]
					P, T	A, B		
MSP1 D23 B910*	NG06 CETOP 03	1	70	54	G½	G⅜	G¼ (only MSP*D23B910C)	2.1 (2.1)
MSP2 D23 B910*		2	120	104				3.7 (3.7)
MSP3 D23 B910*		3	170	154				5.4 (5.3)
MSP4 D23 B910*		4	220	204				6.9 (6.9)
MSP5 D23 B910*		5	270	254				8.6 (8.4)
MSP6 D23 B910*		6	320	304				10.3 (10.1)
MSP7 D23 B910*		7	370	354				11.9 (11.7)
MSP8 D23 B910*		8	420	404				13.5 (13.4)

* ( ) only MSP*D23B910C

MSP*D23 BA910

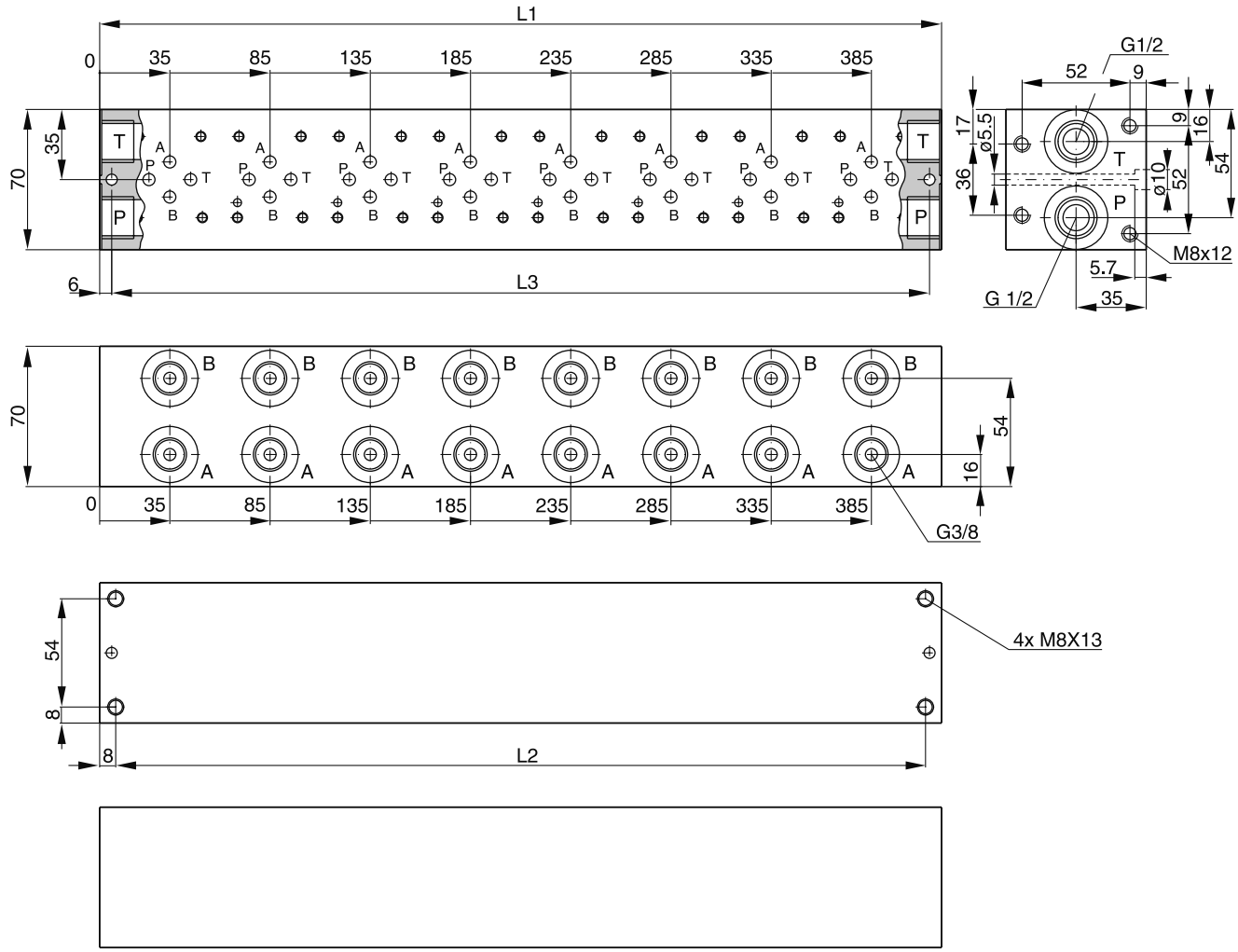

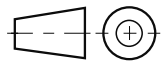

Code	Nominal size	Stations	L1 [mm]	L2 [mm]	L3 [mm]	Port		Gauge port	Weight [kg]
						P, T	A, B		
MSP1 D23 BA910	NG06 CETOP 03	1	70	54	58	G½	G⅜	—	2.0
MSP2 D23 BA910		2	120	104	108				3.5
MSP3 D23 BA910		3	170	154	158				5.0
MSP4 D23 BA910		4	220	204	208				6.6
MSP5 D23 BA910		5	270	254	258				8.1
MSP6 D23 BA910		6	320	304	308				9.6
MSP7 D23 BA910		7	370	354	358				11.2
MSP8 D23 BA910		8	420	404	408				12.7

MSP*D23 BA910C

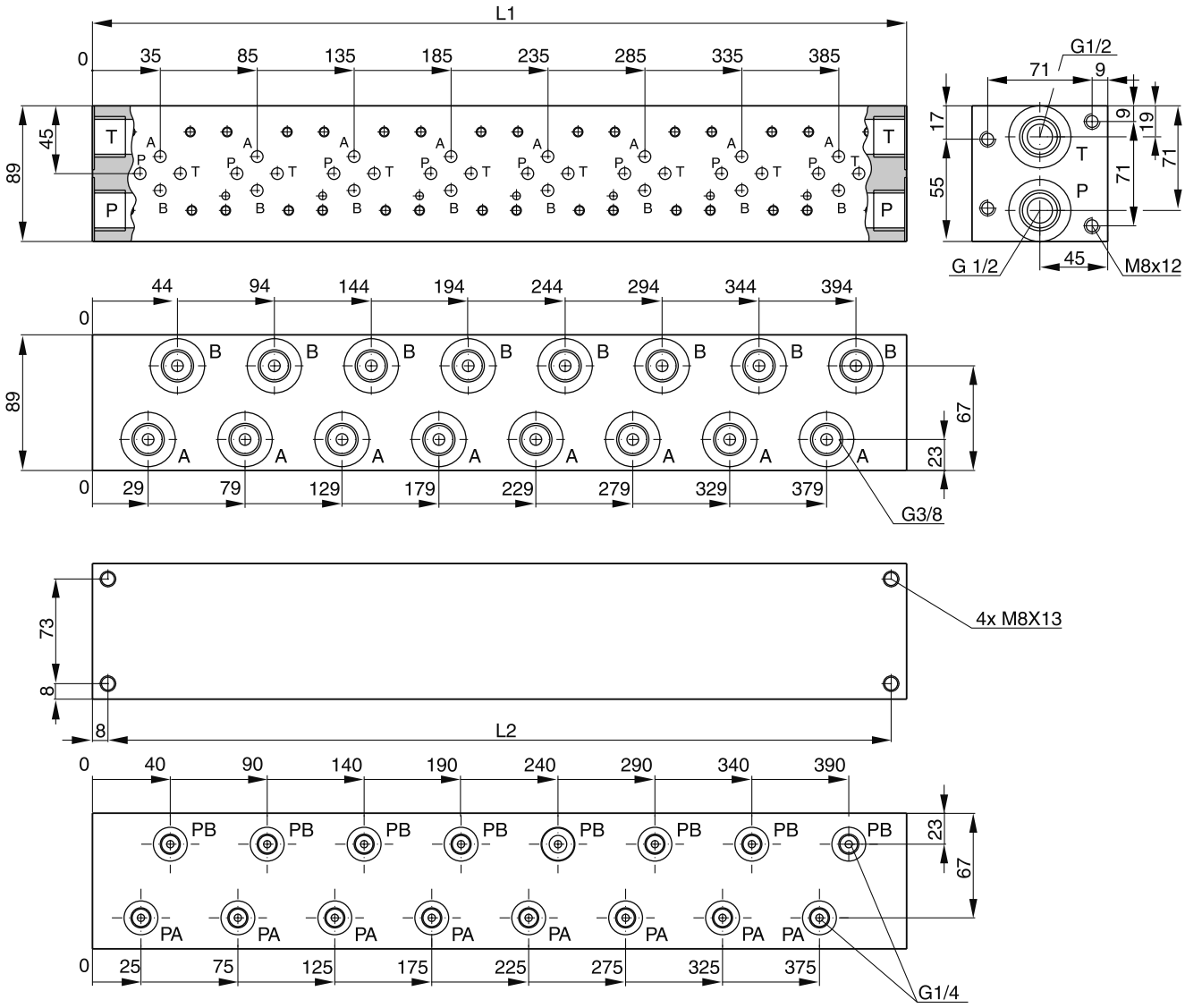

Code	Nominal size	Stations	L1 [mm]	L2 [mm]	Port		Gauge port	Weight [kg]
					P, T	A, B		
MSP1 D23 BA910C	NG06 CETOP 03	1	70	54	G½	G⅜	G¼	3.4
MSP2 D23 BA910C		2	120	104				5.8
MSP3 D23 BA910C		3	170	154				8.4
MSP4 D23 BA910C		4	220	204				10.6
MSP5 D23 BA910C		5	270	254				13.0
MSP6 D23 BA910C		6	320	304				15.7
MSP7 D23 BA910C		7	370	354				18.2
MSP8 D23 BA910C		8	420	404				20.6

MSP*D34 B930*

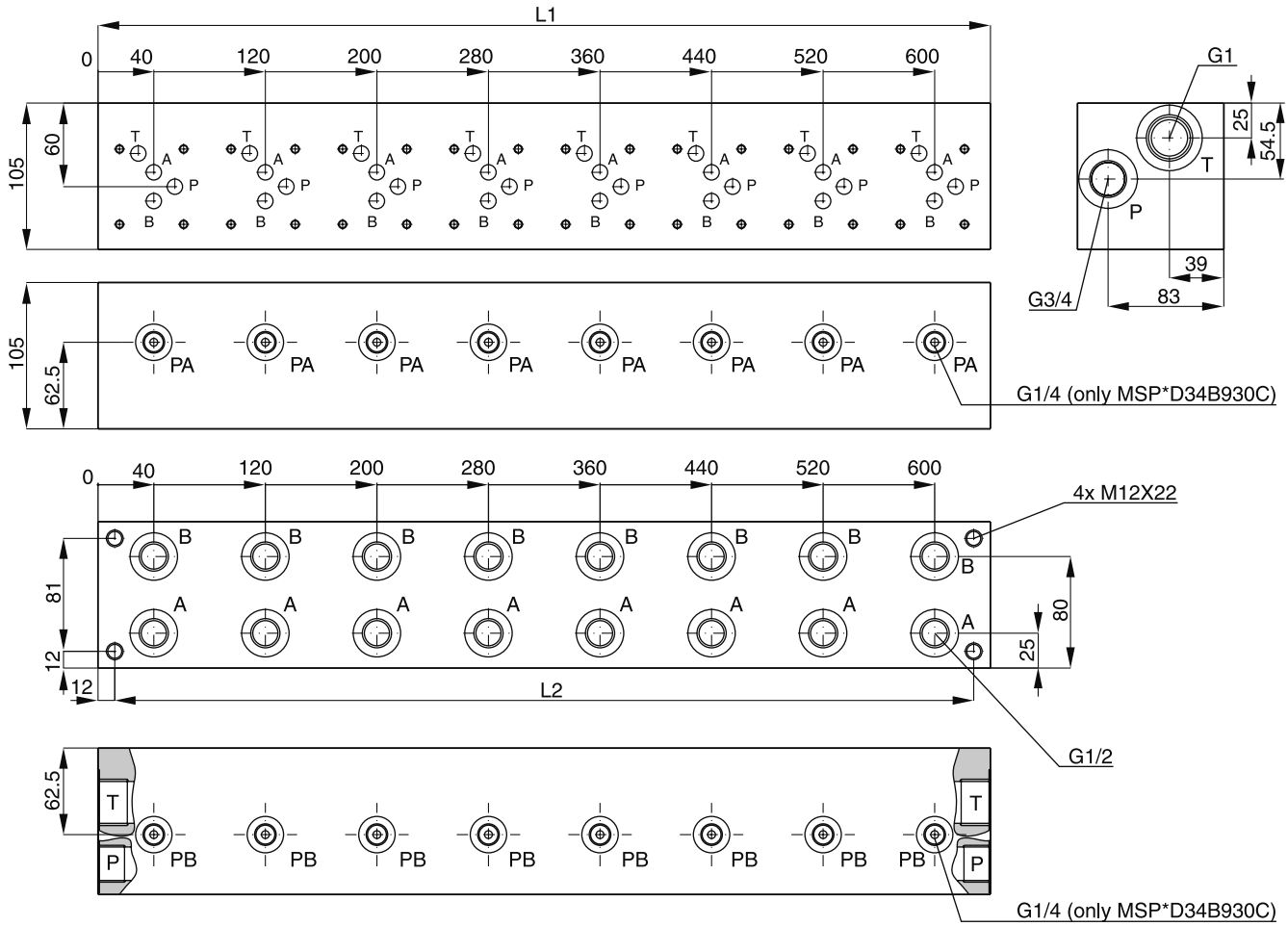

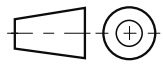

Code	Nominal size	Stations	L1 [mm]	L2 [mm]	Port			Gauge port	Weight [kg]
					P	T	A, B		
MSP1 D34 B930*	NG10 CETOP 05	1	80	56	G¾	G1	G½	G¼ (only MSP*D34B930C)	5.2 (5.1)
MSP2 D34 B930*		2	160	136					10.7 (10.6)
MSP3 D34 B930*		3	240	216					16.2 (16.2)
MSP4 D34 B930*		4	320	296					21.6 (21.6)
MSP5 D34 B930*		5	400	376					27.2 (27.2)
MSP6 D34 B930*		6	480	456					32.5 (32.5)
MSP7 D34 B930*		7	560	536					38.0 (38.0)
MSP8 D34 B930*		8	640	616					43.7 (43.7)

* ( ) only MSP*D34B930C

MSP*D34 BA930

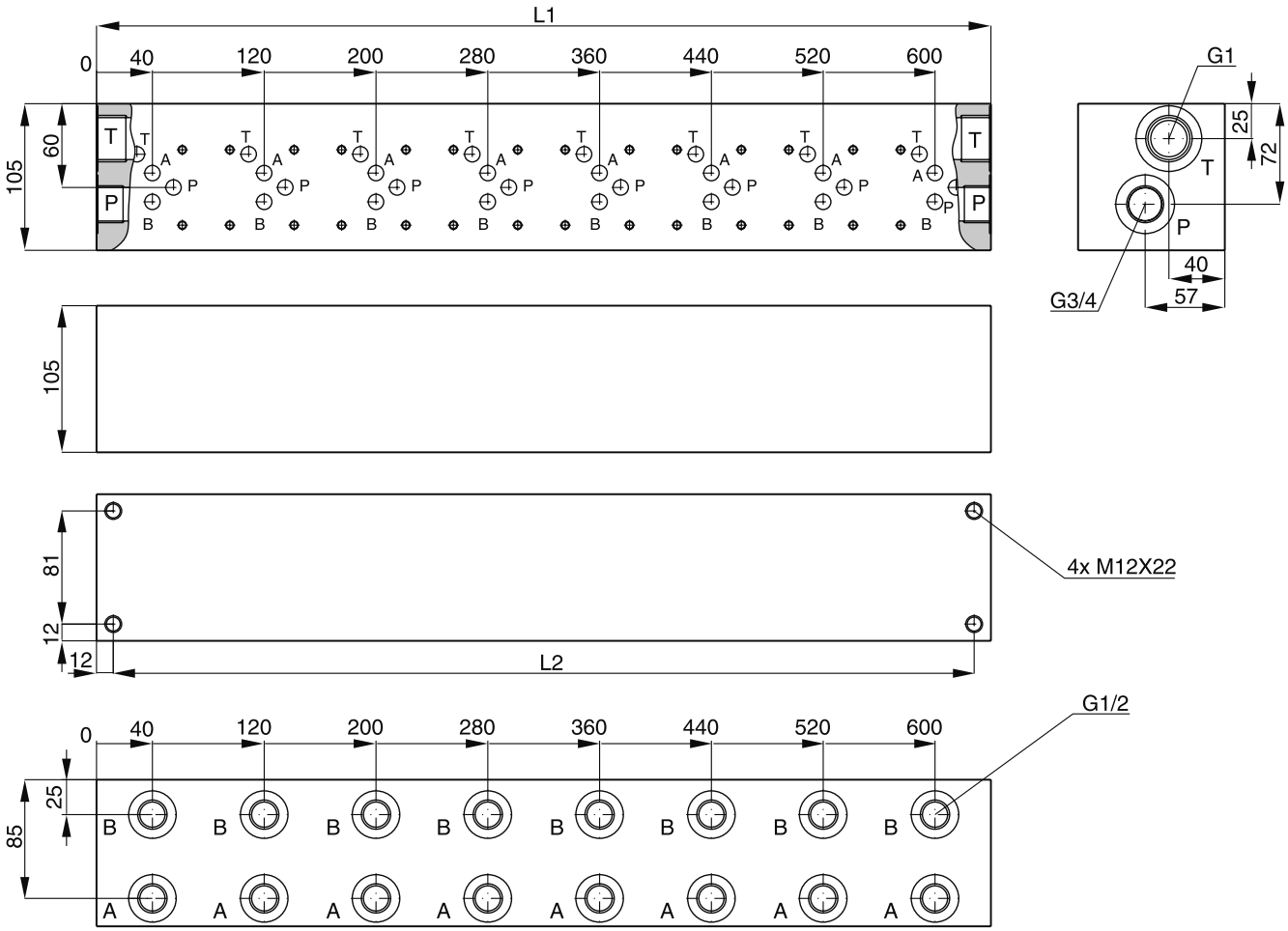

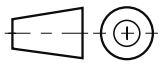

Code	Nominal size	Stations	L1 [mm]	L2 [mm]	Port			Gauge port	Weight [kg]
					P	T	A, B		
MSP1 D34 BA930	NG10 CETOP 05	1	80	56	G¾	G1	G½	—	5.1
MSP2 D34 BA930		2	160	136					10.6
MSP3 D34 BA930		3	240	216					16.0
MSP4 D34 BA930		4	320	296					21.5
MSP5 D34 BA930		5	400	376					26.9
MSP6 D34 BA930		6	480	456					32.5
MSP7 D34 BA930		7	560	536					37.7
MSP8 D34 BA930		8	640	616					43.4

MSP*D34 BA930C

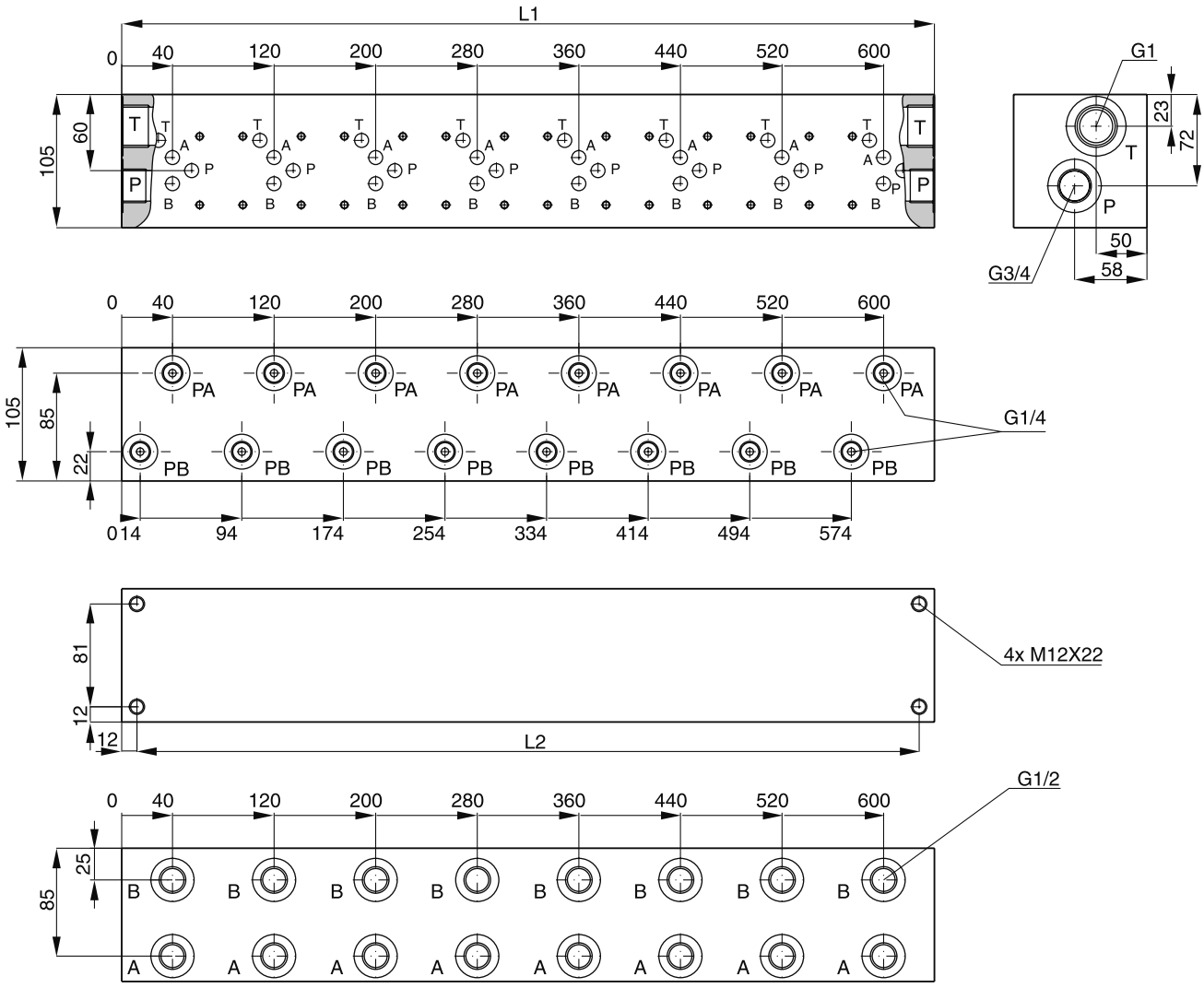

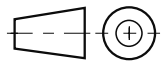

12

Code	Nominal size	Stations	L1 [mm]	L2 [mm]	Port			Gauge port	Weight [kg]
					P	T	A, B		
MSP1 D34 BA930C	NG10 CETOP 05	1	80	56	G¾	G1	G½	G¼	5.1
MSP2 D34 BA930C		2	160	136					10.4
MSP3 D34 BA930C		3	240	216					15.8
MSP4 D34 BA930C		4	320	296					21.2
MSP5 D34 BA930C		5	400	376					26.5
MSP6 D34 BA930C		6	480	456					31.9
MSP7 D34 BA930C		7	560	536					37.2
MSP8 D34 BA930C		8	640	616					42.6

Symbol	Type	Size	Height
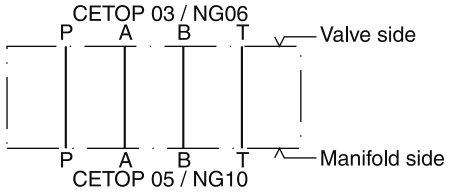	**PADA 1007-AA-BB**	NG10-NG06	25
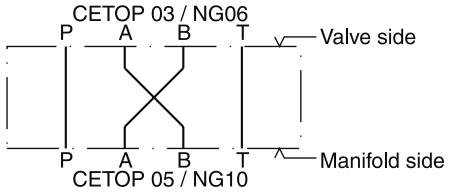	**PADA 1007/A-B/B-A**	NG10-NG06	25
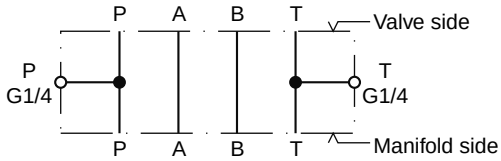	H06-1044	NG06	30
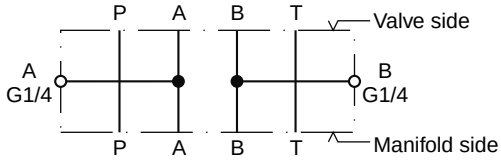	**H06-1039**	NG06	30
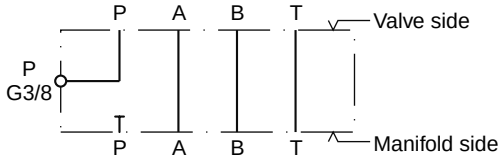	**H06-504**	NG06	30
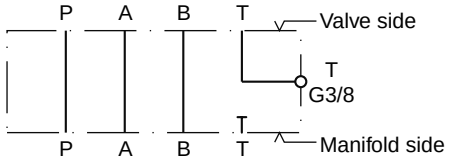	**H06-711**	NG06	30
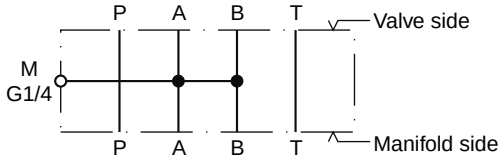	H06-1274	NG06	30
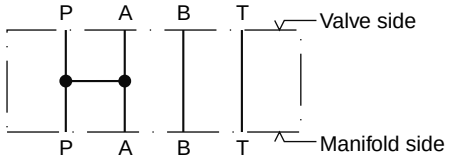 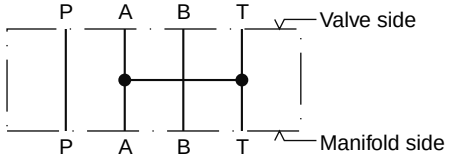	**H06-1040**	NG06	30

Bold letters =
Short-term availability

12

symbols12.INDD CM 02.09.13

Symbol	Type	Size	Height
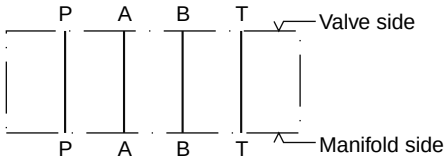	**H06DO-1291**	NG06	10
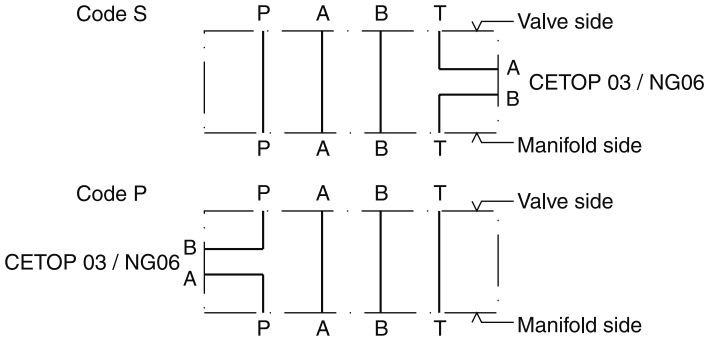	H06DU-814	NG06	71.3
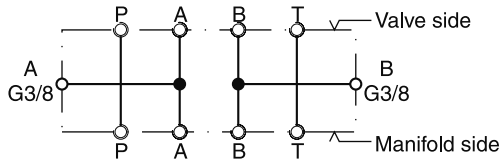 All ports can be equipped with orifices or plugs (1/16NPT)	CS06040N	NG06	40.3
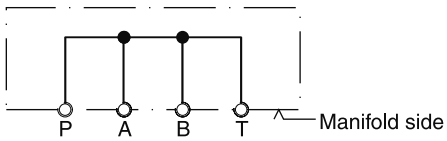 All ports can be equipped with orifices or plugs (1/16NPT)	CS06082N	NG06	40.3
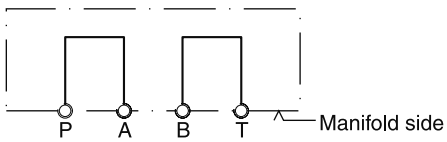 All ports can be equipped with orifices or plugs (1/16NPT)	CS06080N	NG06	40.3
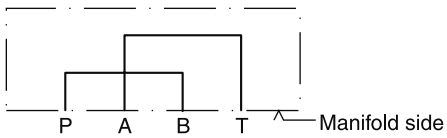	**D51DC071D**	NG06	26.3
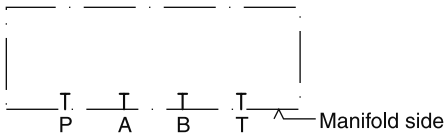	**D51VP071C** **D51VP101D**	NG06 NG10	26.3 26.9

12

Bold letters =
Short-term availability

Adaptor plate PADA 1007-AA-BB, CETOP 05/03, nominal size NG10 to NG06

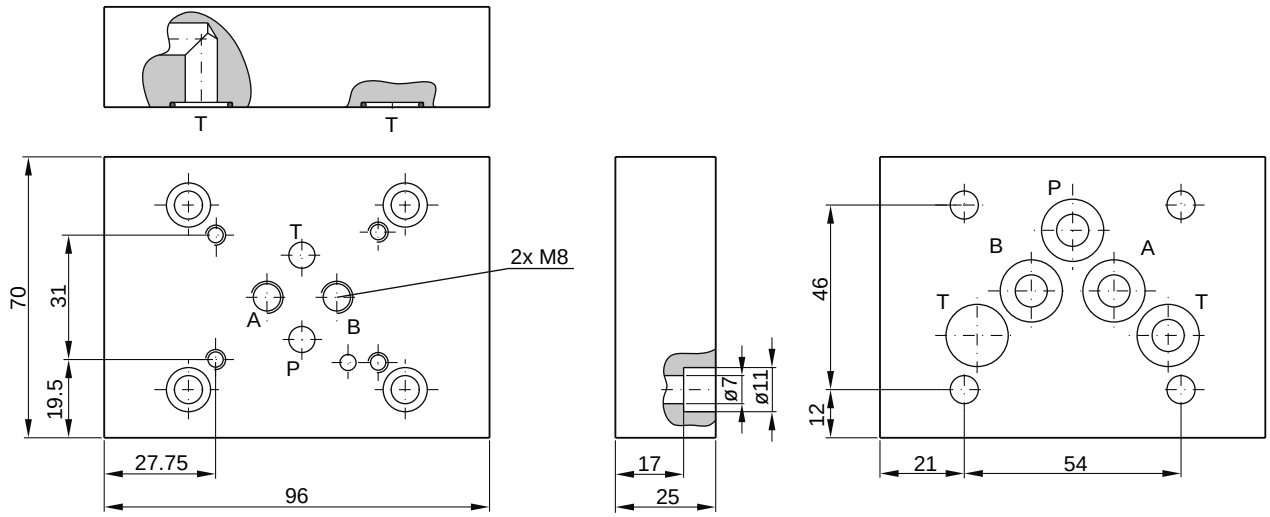

Symbol	Ordering code	Bolt kit	Bolt dimensions	Torque
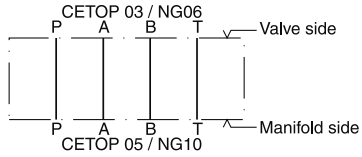	**PADA1007-AA-BB** CETOP 03/05 (O-rings included in delivery)	BK 408	4x M6x25 ISO 4762-12.9	13.2 Nm ±15 %

Adaptor plate PADA 1007/A-B/B-A, CETOP 03/05, nominal size NG10 to NG06

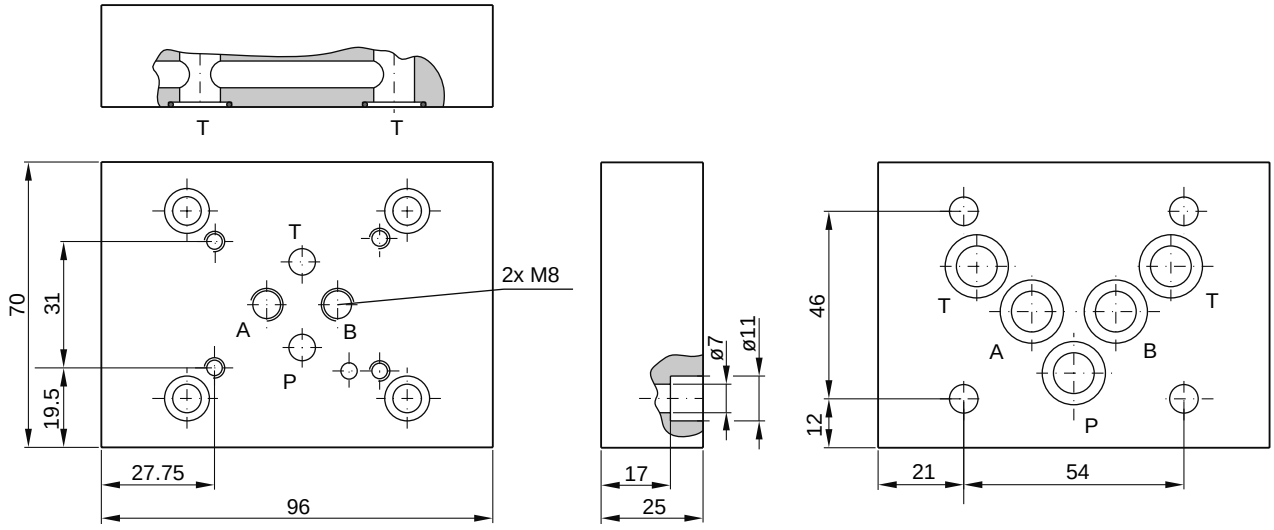

Symbol	Ordering code	Bolt kit	Bolt dimensions	Torque
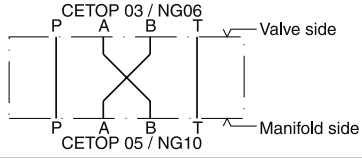	**PADA1007/A-B/B-A** CETOP 03/05 (O-rings included in delivery)	BK 408	4x M6x25 ISO 4762-12.9	13.2 Nm ±15 %

Bold letters =
Short-term availability

Sandwich plate H06-1044, CETOP 03 / NG06

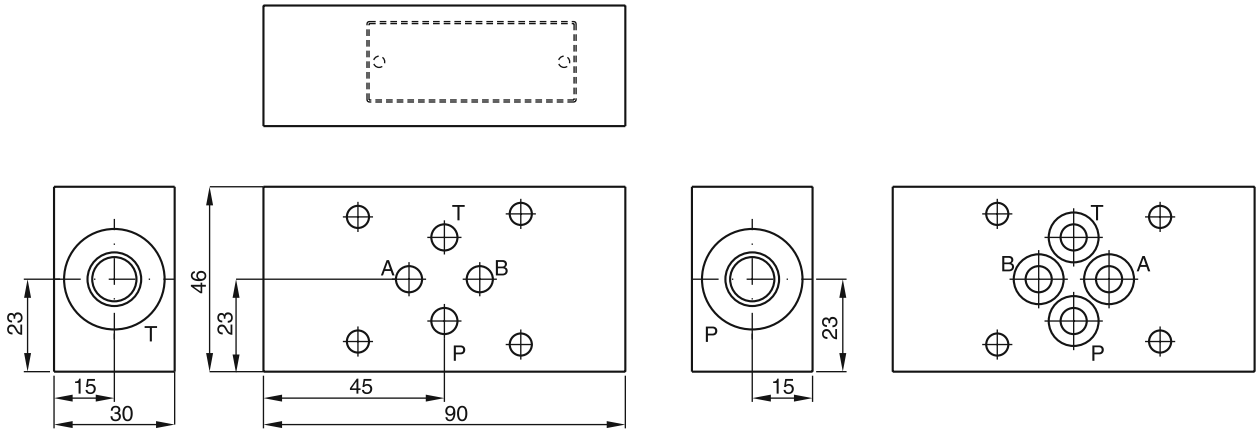

Symbol	Ordering code
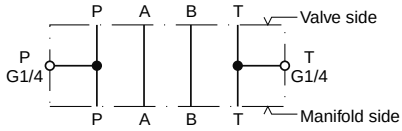	**H06-1044** CETOP 03 (O-rings included in delivery)

Sandwich plate H06-1039, CETOP 03 / NG06

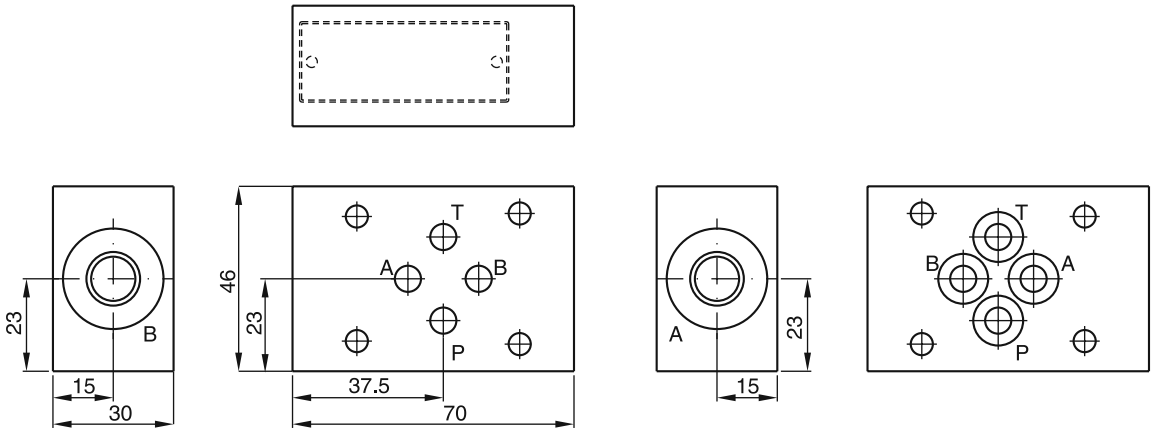

Symbol	Ordering code
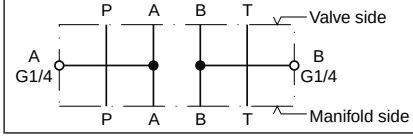	**H06-1039** CETOP 03 (O-rings included in delivery)

12

Sandwich plate H06-504, CETOP 03 / NG06

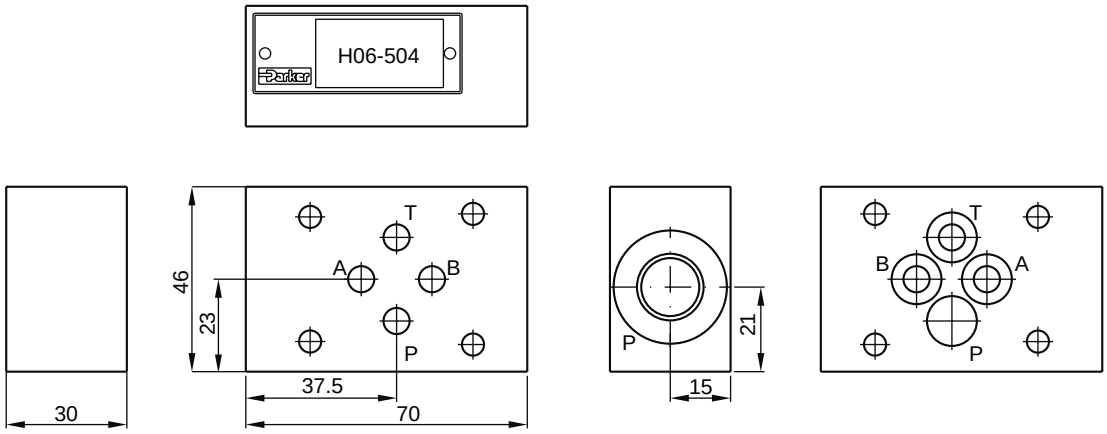

Symbol	Ordering code
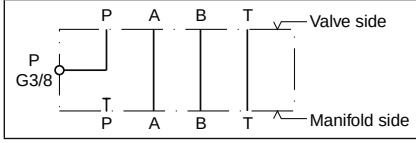	**H06-504** CETOP 03 (O-rings included in delivery)

Sandwich plate H06-711, CETOP 03 / NG06

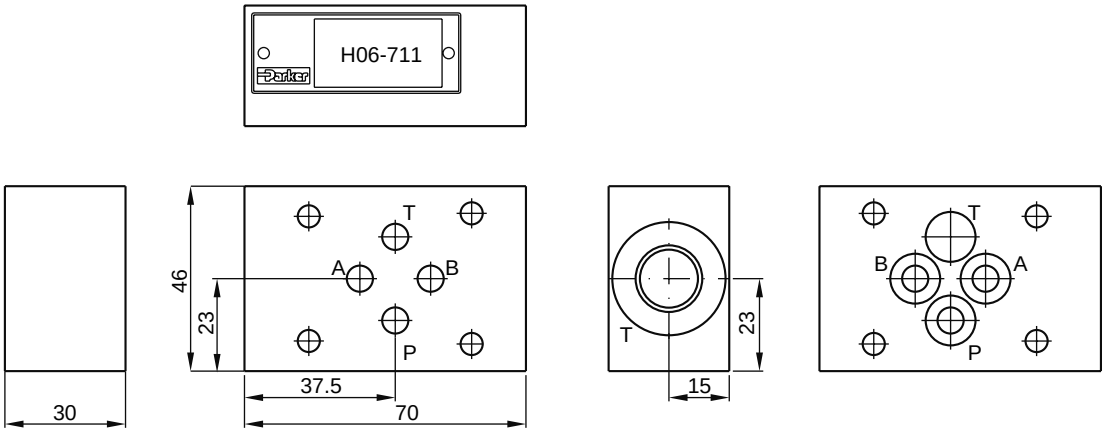

Symbol	Ordering code
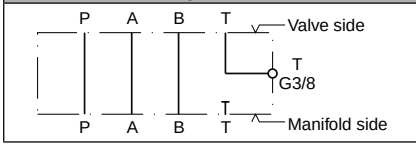	**H06-711** CETOP 03 (O-rings included in delivery)

12

Sandwich plate H06-1274, CETOP 03 / NG06

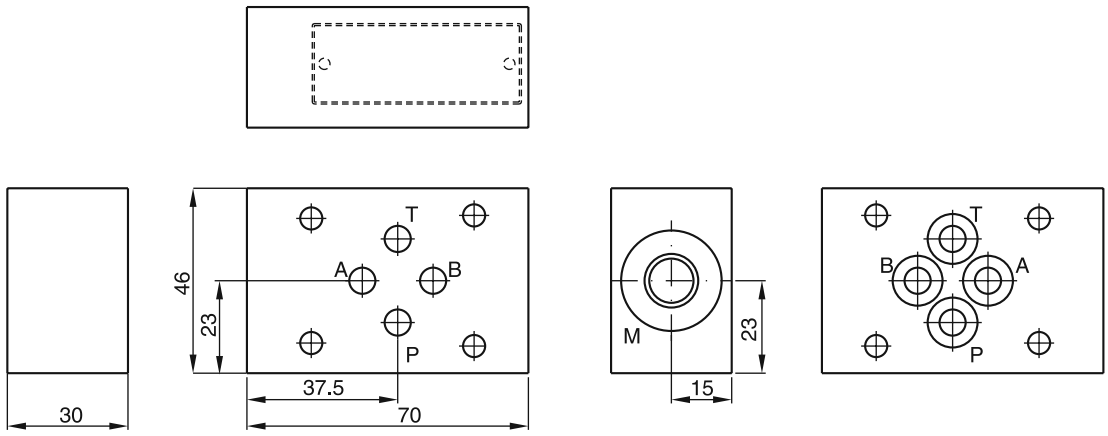

Symbol	Ordering code
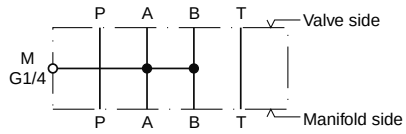	**H06-1274** CETOP 03 (O-rings included in delivery)

Sandwich plate H06-1040, CETOP 03 / NG06

The functional change is achieved by rotating the mounting position of the valve 180°.

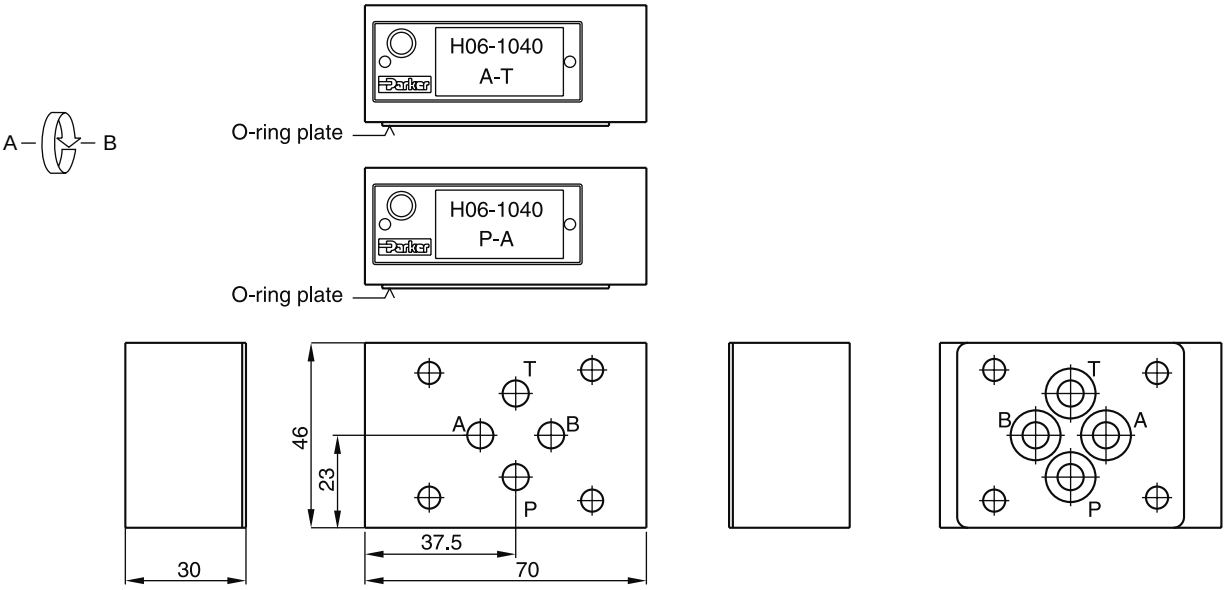

Symbol	Ordering code
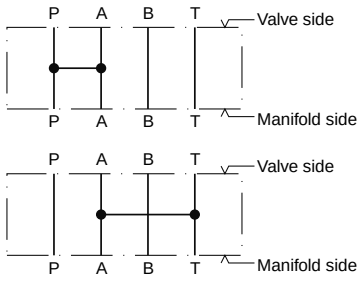	**H06-1040** CETOP 03 (O-rings and O-ring plate included in delivery)

12

H06.INDD CM 08.12.14

Sandwich plate H06DO-1291, CETOP 03 / NG06

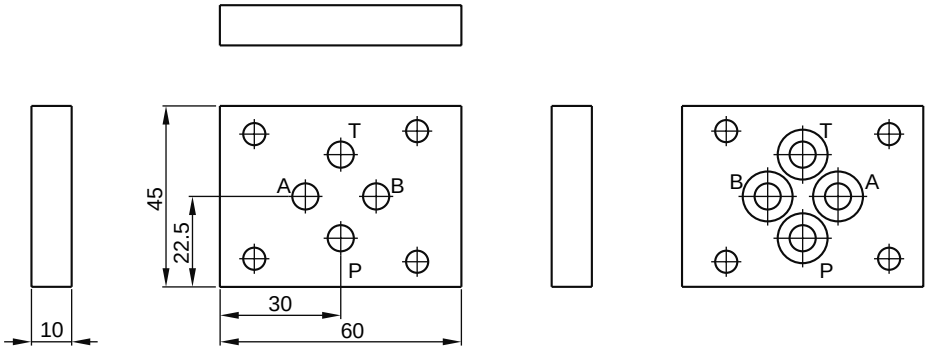

Symbol	Ordering code
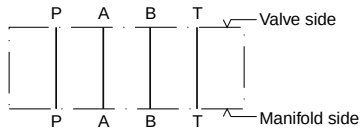	**H06DO-1291** CETOP 03 (O-rings included in delivery)

Sandwich plate H06DU-814, CETOP 03 / NG06

To mount a flow control valve GFG for meter-in (code P) or meter-out (code S) control.

The functional change is achieved by rotating the mounting position of the valve 180°.

For use as secondary control please observe the permitted tank pressure.

Ordering code
H06DU-814 CETOP 03 (O-rings and O-ring plate included in delivery)

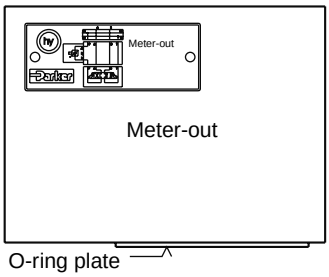

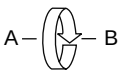

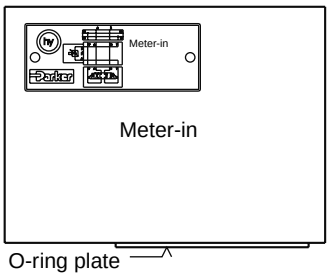

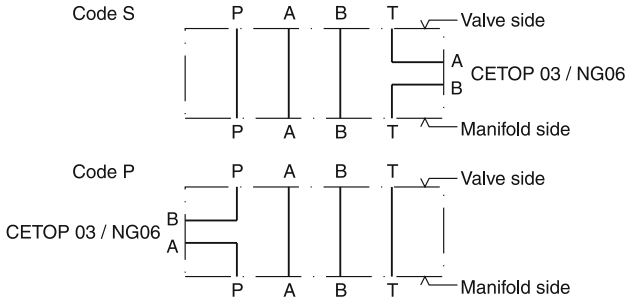

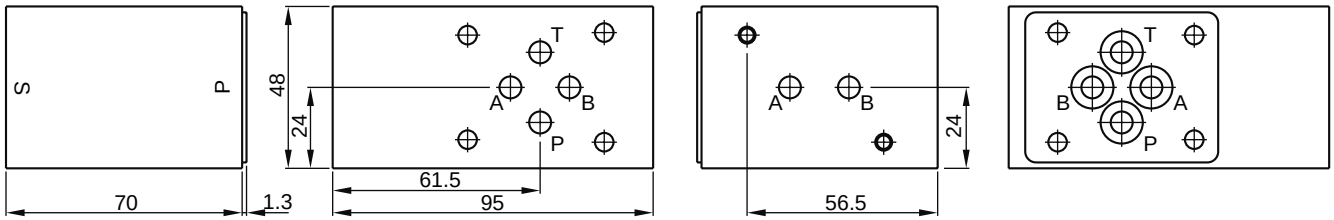

H06.INDD CM 08.12.14

Sandwich plate CS06040N, CETOP 03 / NG06

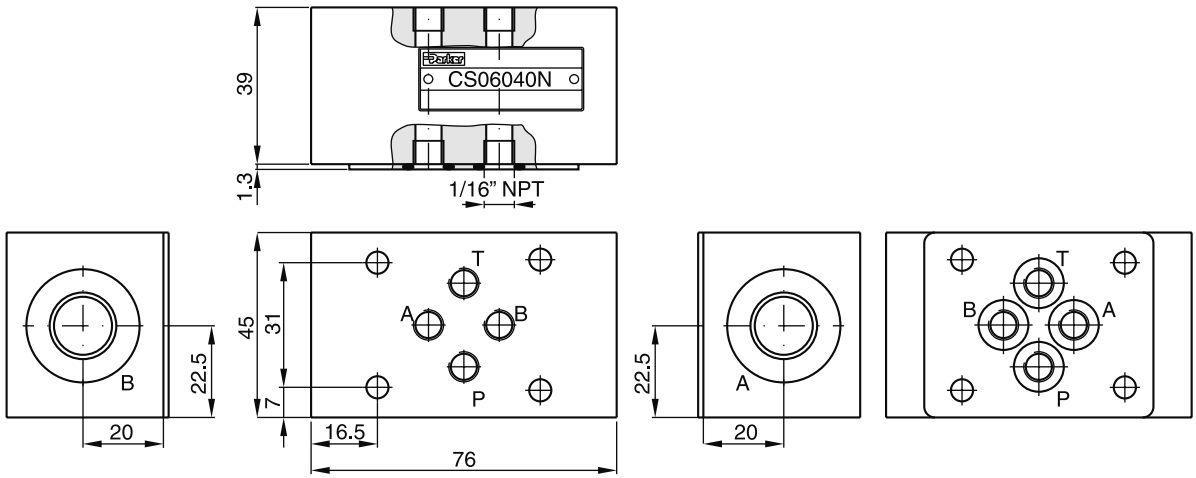

All ports on valve side and manifold side can be equipped with orifices or plugs (1/16 NPT).
For orifice kits see "Accessories" in chapter 8.

Symbol	Ordering code
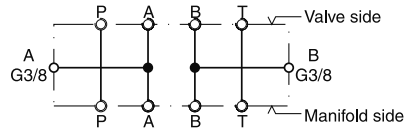	**CS06040N** CETOP 03 (O-rings and O-ring plate included in delivery)

Cover plate CS06082N, CETOP 03 / NG06

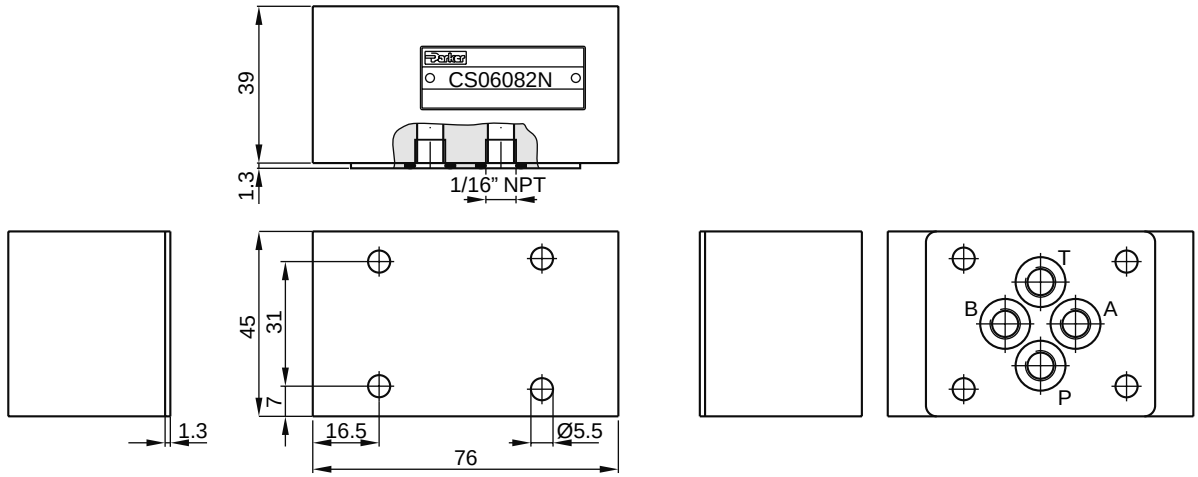

All ports on manifold side can be equipped with orifices or plugs (1/16 NPT).
For orifice kits see "Accessories" in chapter 8.

Symbol	Ordering code	Bolt Kit	Bolt dimensions	Torque
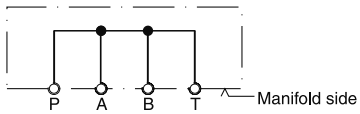	**CS06082N** CETOP 03 (O-rings and O-ring plate included in delivery)	BK 300	4x M5x50 ISO 4762-12.9	7.6 Nm ±15 %

Cover plate CS06080N, CETOP 03 / NG06

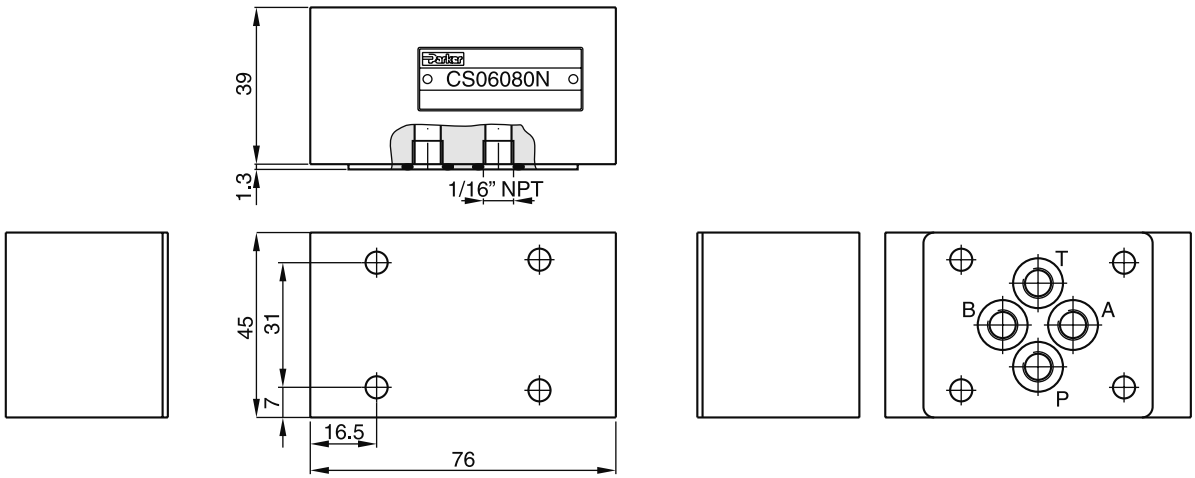

All ports on manifold side can be equipped with orifices or plugs (1/16 NPT).
For orifice kits see "Accessories" in chapter 8.

Symbol	Ordering code	Bolt Kit	Bolt dimensions	Torque
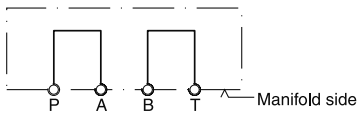	**CS06080N** CETOP 03 (O-rings and O-ring plate included in delivery)	BK 300	4x M5x50 ISO 4762-12.9	7.6 Nm ±15 %

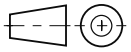

12

Cover plate D51DC071D, CETOP 03 / NG06

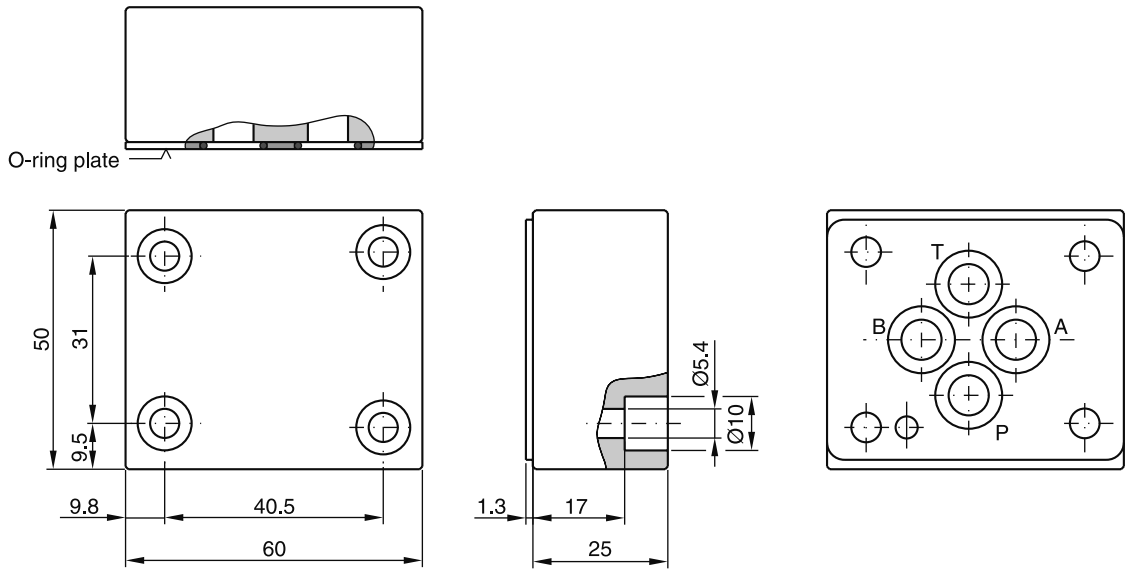

Symbol	Ordering code	Bolt Kit	Bolt dimensions	Torque
P A B T Manifold side	**D51DC071D** CETOP 03 (O-rings and O-ring plate included in delivery)	BK 399	M5x25 ISO 4762-12.9	7.6 Nm ±15 %

Cover plate D51VP071C, CETOP 03 / NG06

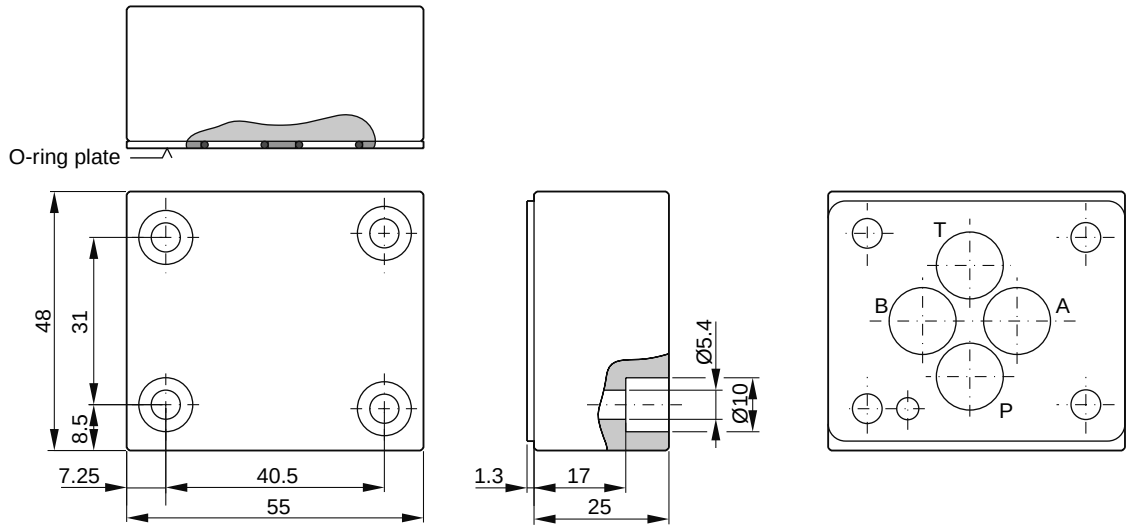

Symbol	Ordering code	Bolt Kit	Bolt dimensions	Torque
T T T T P A B T Manifold side	**D51VP071C** CETOP 03 (O-rings and O-ring plate included in delivery)	BK 399	M5x25 ISO 4762-12.9	7.6 Nm ±15 %

Cover plate D51VP101D, CETOP 05 / NG10

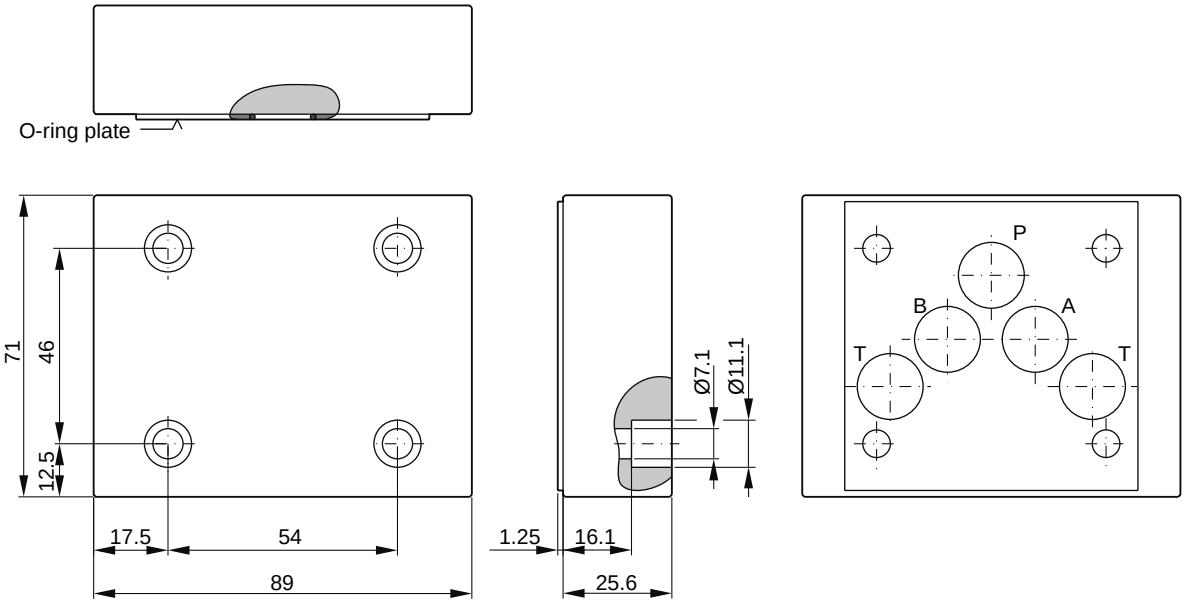

Symbol	Ordering code	Bolt Kit	Bolt dimensions	Torque
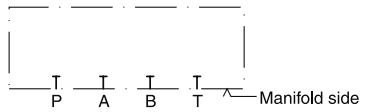	**D51VP101D** CETOP 05 (O-rings and O-ring plate included in delivery)	BK 408	4x M6x25 ISO 4762-12.9	13.2 Nm ±15 %

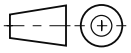

12

Cartridge manifold blocks are bodies for 2/2-way slip-in cartridge valves. They are used in systems with only one cartridge valve without the need to design a specific manifold block.

The pilot ports X and Y can either be connected to A and B or vice versa by changing the mounting position of the cartridge cover.

The wide range of Parker slip-in cartridge valves allows to design solutions for all hydraulic requirements.

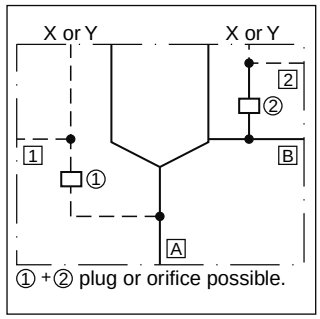

Features

- Flanges SAE61 or SAE62 respectively CETOP square flanges
- 2 options for pilot oil supply and drain
- 7 sizes

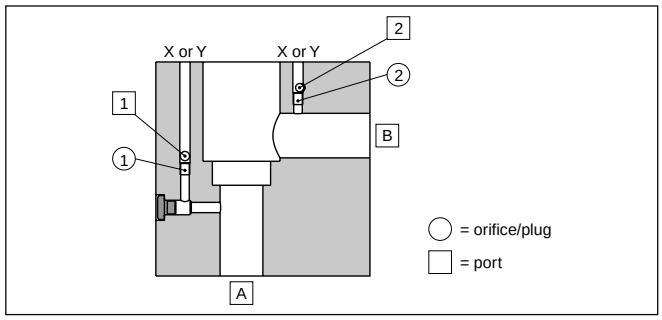

Ordering code

CB		A	1		10	W
Cartridge manifold block	Nominal size	Function In - Out	Manifold for 1 cartridge	Flange size	Design series	Without assembly

Code	Size
016	NG16
025	NG25
032	NG32
040	NG40
050	NG50
063	NG63
080	NG80

Code	Size	Flange
34	016	1" SAE61
35	025	1 ¼" SAE61
36	032	1 ½" SAE61
38	040	2" SAE61
310	050	2 ½" SAE61
312	063	3" SAE61
64	016	1" SAE62
65	025	1 ¼" SAE62
66	032	1 ½" SAE62
68	040/050	2" SAE62
70	063	3 ½" PN400
80	080	4" PN400

12

Technical data

Mounting interface	ISO 7368-B*-*-2-A/B
Mounting position	unrestricted
Max. operating pressure [bar]	138 to 420 (depending on p_{max} of flanges)
Flanges	SAE61 (3000 PSI series), SAE62 (6000 PSI series) ISO 6162, CETOP-square flange (400 bar series)

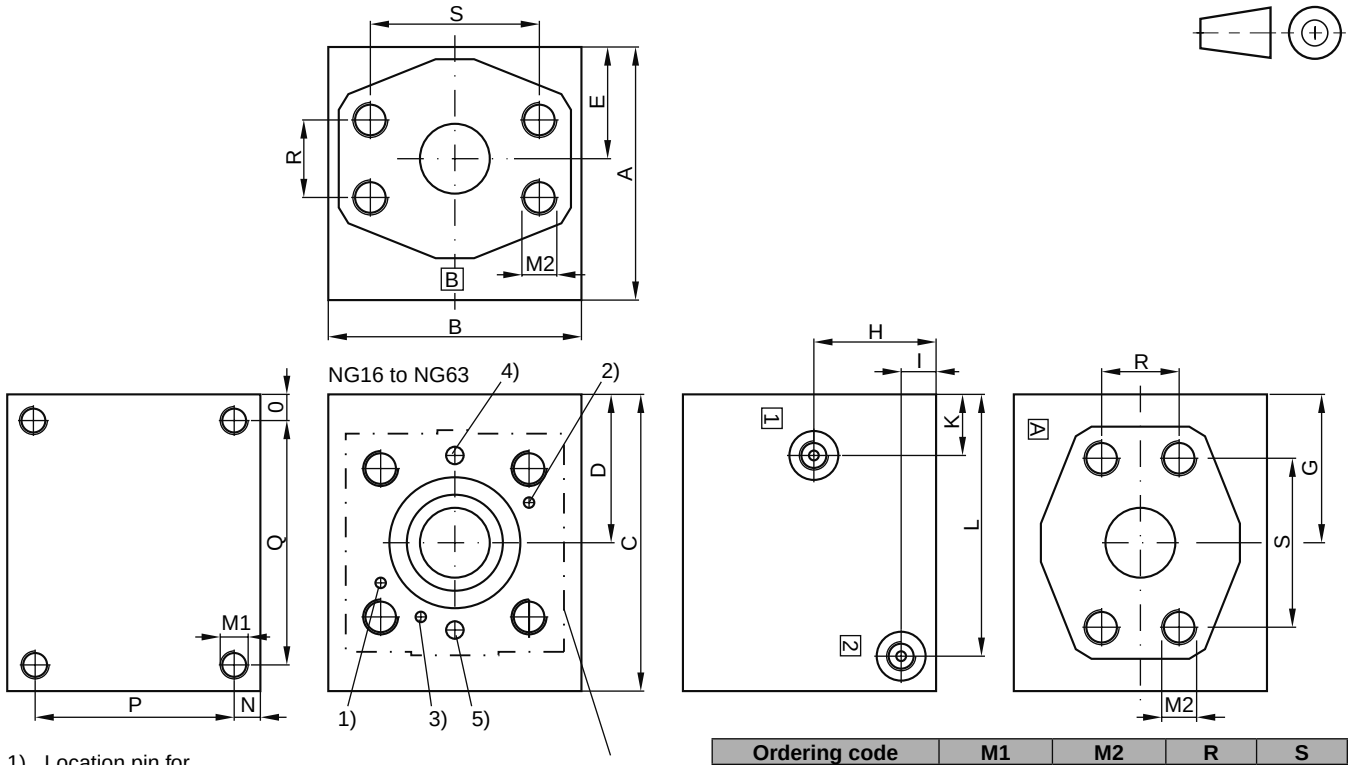

1) Location pin for
X connected to B and 2,
Y connected to A and 1

2) Location pin for
X connected to A and 1,
Y connected to B and 2

3) Location pin for
pressure functions

4) X or Y, orifice/plug ①
(connected to A and 1)

5) X or Y, orifice/plug ②
(connected to B and 2)

Ordering code	M1	M2	R	S
CB 016 A 1 34 10 W	M8 x 16	M10x20	26.2	52.4
CB 016 A 1 64 10 W	M8 x 16	M12x19	27.8	57.2
CB 025 A 1 35 10 W	M10 x 18	M10x20	30.2	58.7
CB 025 A 1 65 10 W	M10 x 18	M14x22	31.8	66.6
CB 032 A 1 36 10 W	M16 x 30	M12x24	35.7	69.9
CB 032 A 1 66 10 W	M16 x 30	M16x32	36.5	79.3
CB 040 A 1 38 10 W	M16 x 30	M12x24	42.9	77.8
CB 040 A 1 68 10 W	M16 x 30	M20x40	44.5	96.8
CB 050 A 1 310 10 W	M16 x 30	M12x24	50.8	88.9
CB 050 A 1 68 10 W	M16 x 30	M20x40	44.5	96.8
CB 063 A 1 312 10 W	M16 x 30	M16x30	61.9	106.4
CB 063 A 1 70 10 W	M16 x 30	M20x33	102.5	102.5
CB 080 A 1 80 10 W	M16 x 30	M24x50	113.2	113.2

Ordering code	Max. operating pressure [bar]	A	B	C	D	E	G	H	I	K	L	N	O	P	Q	Port A and B	Port 1 and 2	Orifice thread ① and ②	Weight [kg]
CB 016 A 1 34 10 W	350	105	80	105	38.5	34	38.5	45	13	13.5	75.5	10	10	85	85	1" SAE61	G1/4	M5	6
CB 016 A 1 64 10 W	420	105	80	105	38.5	34	38.5	45	13	13.5	75.5	10	10	85	85	1" SAE62	G1/4	M5	6
CB 025 A 1 35 10 W	280	125	100	125	50	43	50	55	15	17	94.5	10	10	105	105	1-¼" SAE61	G1/4	M6	11
CB 025 A 1 65 10 W	420	125	100	125	50	43	50	55	15	17	94.5	10	10	105	105	1-¼" SAE62	G1/4	M6	11
CB 032 A 1 36 10 W	210	125	125	145	72.5	51	72.5	55	15	31.5	125	15	15	95	115	1-½" SAE61	G1/4	M6	16
CB 032 A 1 66 10 W	420	125	125	145	72.5	51	72.5	55	15	31.5	125	15	15	95	115	1-½" SAE62	G1/4	M6	16
CB 040 A 1 38 10 W	210	145	145	170	85	65	85	70	20	35	150	15	15	115	140	2" SAE61	G3/8	M8	25
CB 040 A 1 68 10 W	420	145	145	170	85	65	85	70	20	35	150	15	15	115	140	2" SAE62	G3/8	M8	25
CB 050 A 1 310 10 W	172	155	155	190	95	70	95	70	20	37	170	15	15	125	160	2-½" SAE61	G3/8	M8	32
CB 050 A 1 68 10 W	420	155	155	190	95	70	95	70	20	37	170	15	15	125	160	2" SAE62	G3/8	M8	32
CB 063 A 1 312 10 W	138	192	192	240	120	86.5	120	86.5	20	45	220	15	15	165	210	3" SAE61	G3/8	M8	63
CB 063 A 1 70 10 W	400	192	192	240	120	86.5	120	86.5	20	45	220	15	15	162	210	3-½" PN 400	G3/8	M8	63
CB 080 A 1 80 10 W	400	270	270	270	135	120	135	120	20	35	250	15	15	240	240	4" PN 400	G3/8	M8	139

Cartridge manifold blocks are supplied with a set of plugs and orifices.

CB.INDD CM 19.02.15

The adaptor plates A10 and sandwich plates H10 allow energy saving circuits for differential cylinders using the following directional control valves NG10:

D3DW**R***	D3FB**R***	D31FB**R***
D31NW**R***	D3FP**R***	D31FC**R***
		D31FP**R***

Features

- To be used in combination with the above-mentioned valves. See also series D31NWR in chapter 2 and series D3FB, D3FP, D31FB, D31FC and D31FP in chapter 3
- Port T1 is used as single tank port. Port T2 is separated from port T1 by the elimination of the tank bridge and is used for regeneration into the A port
- The circuit conception can be integrated into the manifold block as well

Regenerative function

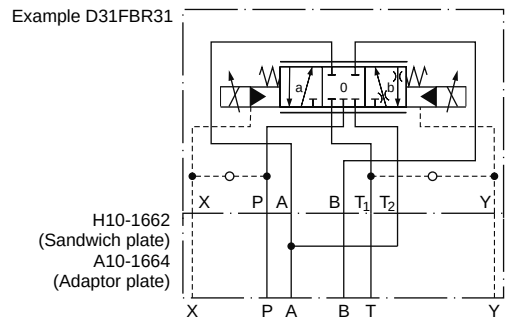

Hybrid function

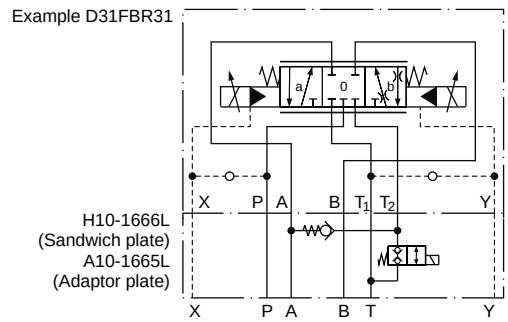

NG10 body without tank bridge – example D31FPR
T2 used as regenerative port.

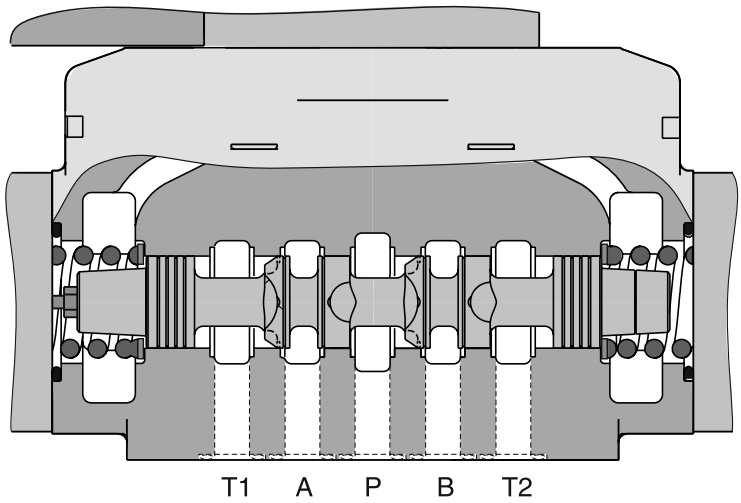

12

General					
Actuation		Solenoid (only A10-1665L and H10-1666L)			
Size		DIN NG10 / CETOP 05			
Mounting interface		DIN 24340 A10 / ISO 4401 / CETOP RP 121-H / NFPA D05			
Mounting position		unrestricted			
Ambient temperature	[°C]	-25...+60, -20...+60 (D*FBR), -20...+50 (D*FPR)			
$MTTF_D$ value	[years]	150			
		A10-1664	A10-1665L	H10-1662	H10-1666L
Weight	[kg]	11.9	14.4	2.8	4.9
Hydraulic					
Max. operating pressure	[bar]	350			
Fluid		Hydraulic oil according to DIN 51524			
Fluid temperature	[°C]	-20...+70 (NBR: -25...+70), -20...+60 (NBR: -25...+60) (D*FBR*, D*FPR*, D31FCR*)			
Viscosity permitted	[cSt] / [mm²/s]	2.8...400 (20...400 D*FBR, D*FPR)			
Viscosity recommended	[cSt] / [mm²/s]	30...80			
Filtration		ISO 4406 (1999); 18/16/13			
		A10*		H10*	
Flow max.	[l/min]	150		250	
Regeneration B-A	[l/min]	see diagram			
Regeneration B-T	[l/min]	75		75	
Electrical characteristics					
Duty ratio		100 %			
Protection class		IP65 in accordance with EN 60529 (with correctly mounted plug-in connector)			
Supply voltage	[V]	24			
Tolerance supply voltage	[%]	±10			
Current consumption	[A]	1.21			
Power consumption	[W]	29			
Solenoid connection		Connector as per EN 175301-803			
Wiring min.	[mm²]	3 x 1.5 recommended			
Wiring length max.	[m]	50 recommended			

With electrical connections the protective conductor (PE ⏚) must be connected according to the relevant regulations.

Regenerative function

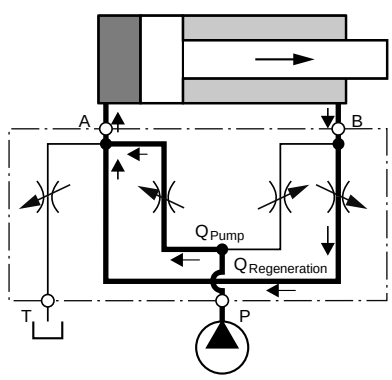

Hybrid function

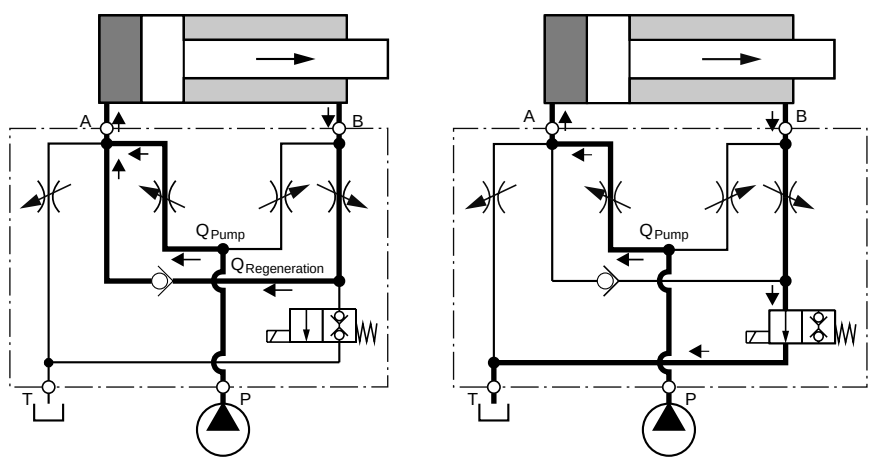

Energy saving A-regeneration and switchable hybrid version for NG10 valves

Subplate A10-1664, mounting interface acc. DIN 24340-A10, CETOP 05 / NG10
for A-regeneration

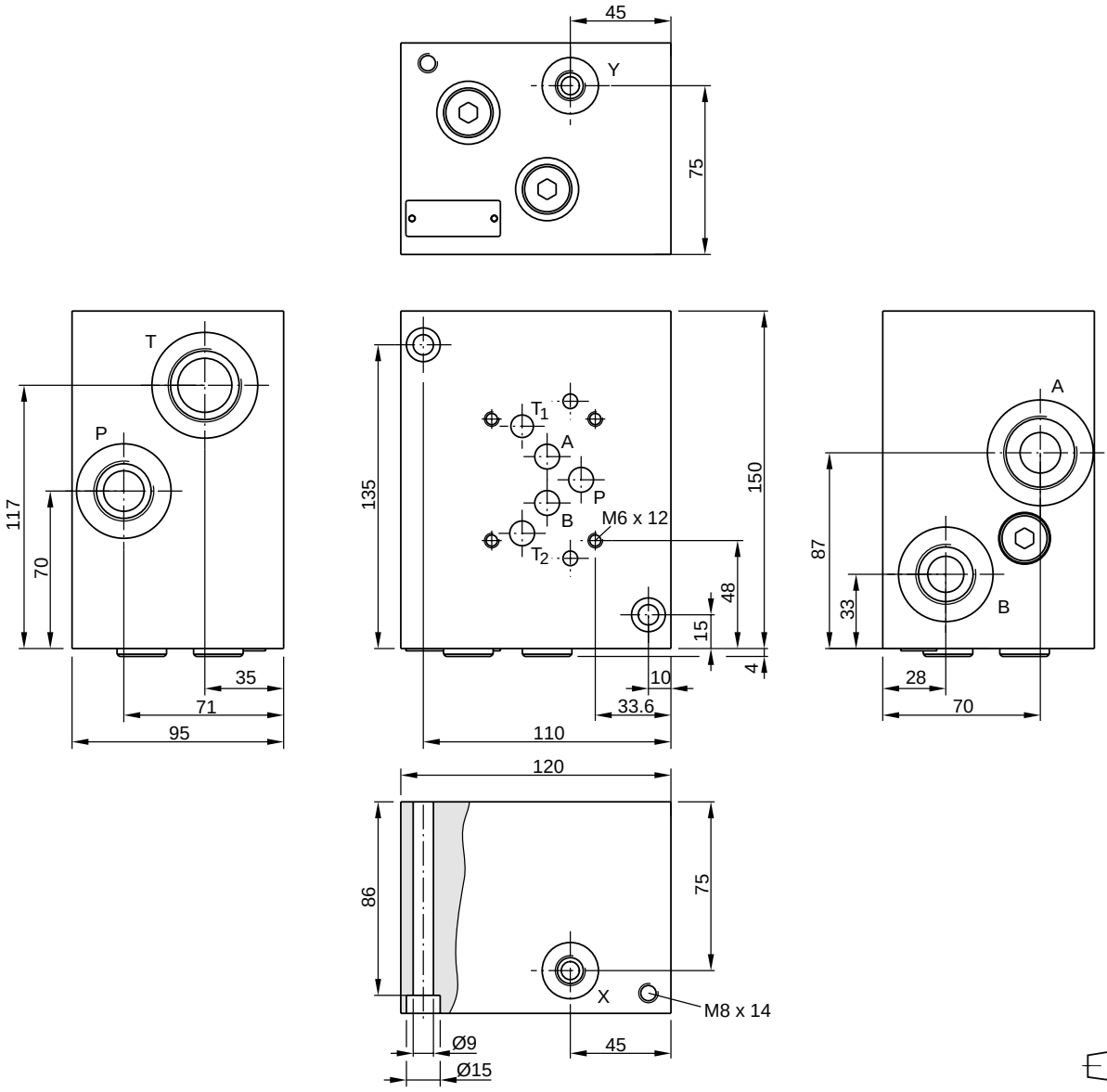

12

Symbol	Ordering code	Port
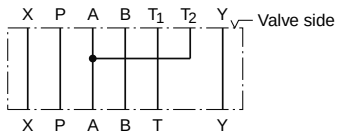	**A10-1664** CETOP 05	A, T = G1 B, P = G¾ X, Y = G¼

A10 UK.INDD CM 25.11.14

Subplate A10-1665L, mounting interface acc. DIN 24340-A10, CETOP 05 / NG10 for hybrid function

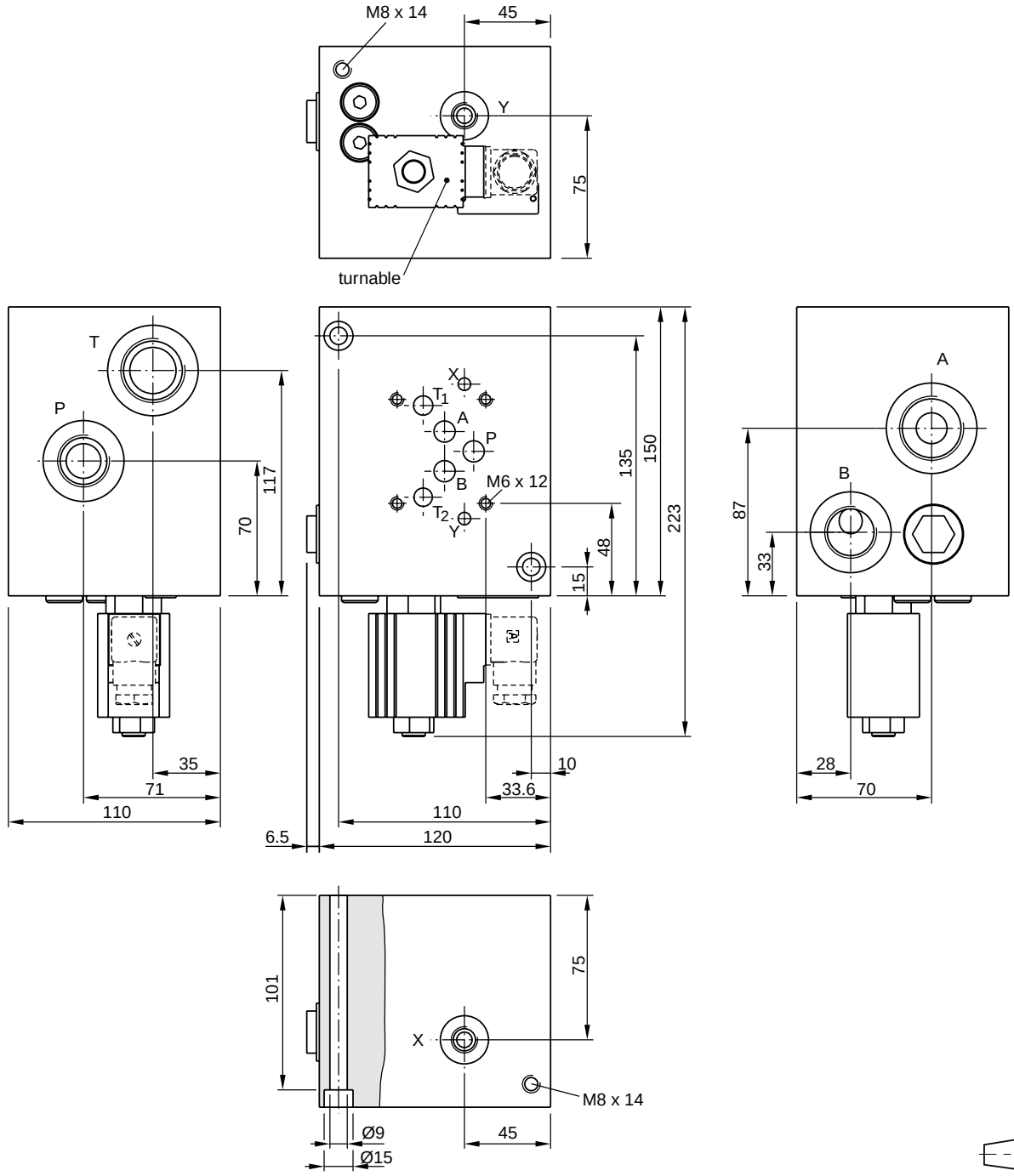

Symbol	Ordering code	Port	Kit
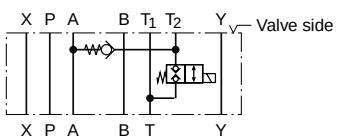	**A10-1665L** CETOP 05	A, T = G1 B, P = G¾ X, Y = G¼	NBR: SK-A10-1665

A10 UK.INDD CM 25.11.14

Sandwich plate H10-1662, mounting interface acc. DIN 24340-A10, CETOP 05 / NG10 for A-regeneration

p/Q performance curves

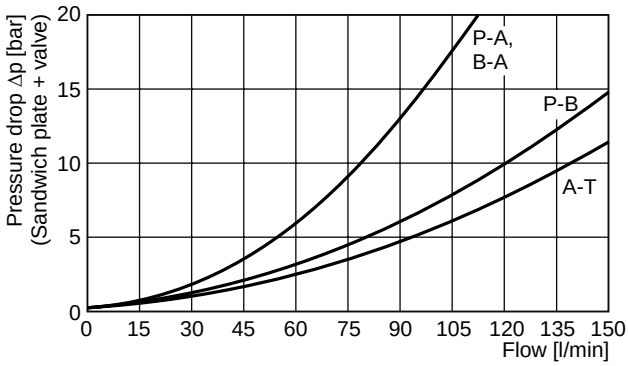

Measured with valves D31FP/FB/FC*, spool Z31 at command signal 100 %.

Curves for D3W, D31NW, D3FB and D3FP on request.

Dimensions

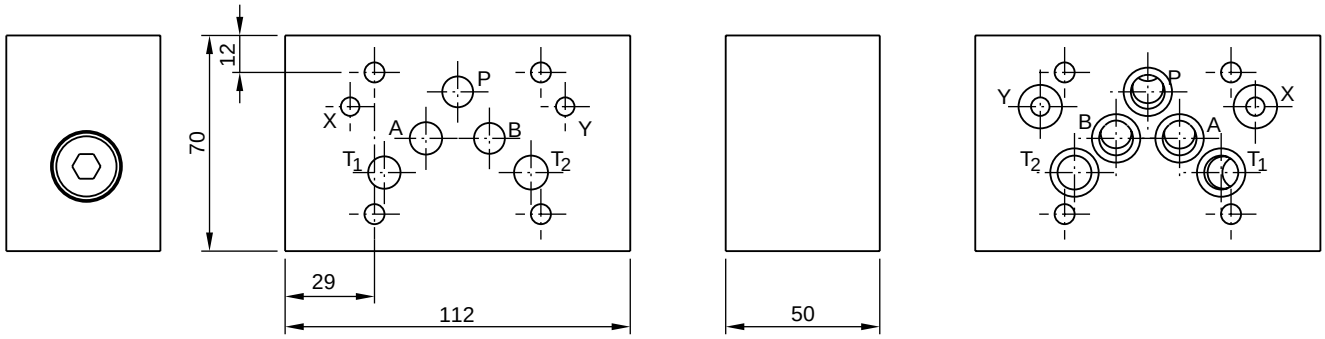

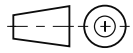

12

Symbol	Ordering code	Kit		Torque	Kit
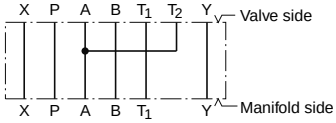	**H10-1662** CETOP 05 (O-rings included in delivery)	BK412	4x M6x90 ISO 4762-12.9	13.2 Nm ±15 %	NBR: SK-H10-1662

H10 UK.INDD CM 17.04.15

Sandwich plate H10-1666L, mounting interface acc. DIN 24340-A10, CETOP 05 / NG10 for hybrid function

p/Q performance curves

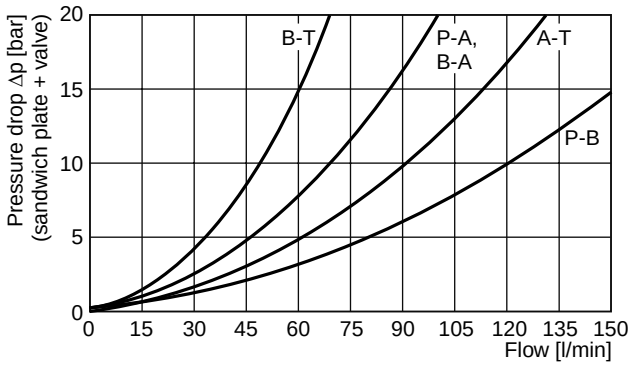

Measured with valves D31FP/FE/FB/FC*, spool Z31 at command signal 100 %.

Curves for D3W, D31NW, D3FB and D3FP on request.

Dimensions

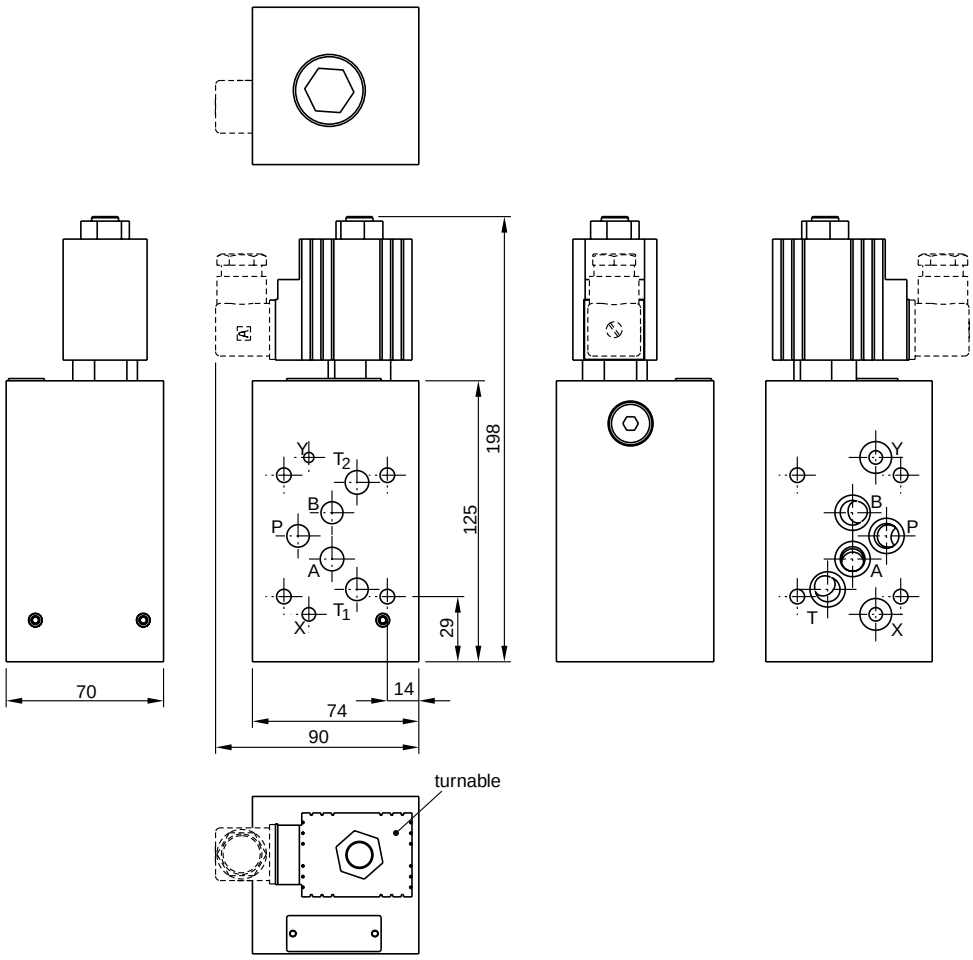

Symbol	Ordering code	Kit		Torque	Kit
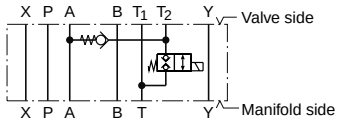	**H10-1666L** CETOP 05 (O-rings included in delivery)	BK528	4x M6x110 ISO 4762-12.9	13.2 Nm ±15 %	NBR: SK-H10-1666

H10 UK.INDD CM 17.04.15

BK bolt kits

Socket head cap screws as per ISO 4762-12.9

Ordering code	Description
BK 399	**Bolt kit M5x25**
BK 375	**Bolt kit M5x30**
BK 443	**Bolt kit M5x45**
BK 300	**Bolt kit M5x50**
BK 380	**Bolt kit M5x60 2 pcs.**
BK 421	**Bolt kit M5x65**
BK 400	**Bolt kit M5x70**
BK 401	**Bolt kit M5x75**
BK 402	**Bolt kit M5x80**
BK 444	Bolt kit M5x85
BK 403	**Bolt kit M5x90**
BK 468	Bolt kit M5x95
BK 404	**Bolt kit M5x100**
BK 466	Bolt kit M5x100 2 pcs.
BK 405	**Bolt kit M5x110**
BK 406	**Bolt kit M5x115**
BK 424	**Bolt kit M5x130**
BK 408	**Bolt kit M6x25**
BK 385	**Bolt kit M6x40**
BK 310	**Bolt kit M6x55**
BK 422	Bolt kit M6x75
BK 412	**Bolt kit M6x90**
BK 508	Bolt kit M6x100
BK 311	**Bolt kit M6x105**
BK 528	**Bolt kit M6x110**
BK 414	**Bolt kit M8x40**
BK 441	Bolt kit M8x50
BK 533	Bolt kit M8x90
BK 538	Bolt kit M8x95
BK 510	Bolt kit M8x100
BK 505	Bolt kit M10x35
BK 388	**Bolt kit M10x40**
BK 485	**Bolt kit M10x45**
BK 506	Bolt kit M10x45 6 pcs.
BK 389	**Bolt kit M10x50**
BK 390	**Bolt kit M10x50 6 pcs.**
BK 320	**Bolt kit M10x60 4 pcs. / M6x55 2 pcs.**
BK 484	**Bolt kit M10x65**
BK 539	Bolt kit M10x95
BK 521	Bolt kit M10x120 4 pcs. / M6x120 2 pcs.
BK 494	Bolt kit M12x45
BK 391	**Bolt kit M12x50**
BK 486	Bolt kit M12x70
BK 525	Bolt kit M12x75
BK 360	**Bolt kit M12x75 6 pcs.**
BK 532	Bolt kit M12x90
BK 504	Bolt kit M12x100
BK 522	Bolt kit M12x140 6 pcs.
BK 460	Bolt kit M12x145 6 pcs.
BK 415	**Bolt kit M16x55**
BK 366	Bolt kit M16x70
BK 526	Bolt kit M16x80
BK 511	Bolt kit M16x90
BK 529	Bolt kit M16x100
BK 487	Bolt kit M16x110
BK 512	Bolt kit M16x150
BK 507	Bolt kit M18x75
BK 416	Bolt kit M20x70
BK 417	Bolt kit M20x75

Ordering code	Description
BK 527	Bolt kit M20x80
BK 534	Bolt kit M20x90
BK 386	Bolt kit M20x90 6 pcs.
BK 481	Bolt kit M20x110
BK 513	Bolt kit M20x120
BK 514	Bolt kit M20x150
BK 515	Bolt kit M20x160
BK 419	Bolt kit M24x120 8 pcs.
BK 516	Bolt kit M24x150 8 pcs.
BK 530	Bolt kit M24x160 8 pcs.
BK 418	Bolt kit M30x100
BK 536	Bolt kit M30x120
BK 509	Bolt kit M30x130 8 pcs.
BK 420	Bolt kit M30x140 8 pcs.
BK 520	Bolt kit M30x150
BK 531	Bolt kit M30x150 8 pcs.
BK 518	Bolt kit M30x160
BK 519	Bolt kit M30x180

If no other specification is indicated, 1 bolt kit contains 4 screws.

Thread length

Threads	M5	M6	M10	M12
Thread length	1.5 x Ø thread			

Note

The torque for bolt kits or tie rod kits is according to valve type/product. Consult product chapters.

Torque for plugs

(Specifications ±15 %) [1)]

Metric	[Nm]
M10 x 1	15
M12 x 1.5	25
M14 x 1.5	25
M18 x 1.5	40
M20 x 1.5	50
M22 x 1.5	60
M24 x 1.5	65
M27 x 2	90
M33 x 2	140
M42 x 2	240
M48 x 2	300

BSPP	[Nm]
1/8	15
1/4	25
3/8	40
1/2	60
3/4	90
1	140
1 1/4	240
1 1/2	300
2	550

UNF	[Nm]
5/16	6.9
3/8	6.9
7/16	25
1/2	25
9/16	40
3/4	40
7/8	60
1 1/16	90
1 3/16	140
1 5/16	240
1 5/8	300

1) The tightening torques refer to counter material steel, cast iron and SG iron by usage of impact wrenchs (with torsion bar) and impulse tools. The plugs have to be screwed in slightly oiled in bodys respectively blocks.
For aluminium plugs the specified torque above has to be reduced to one third.
For aluminium blocks should be used 75 % of specified above.

Bold letters =
Short-term availability

TK tie rod kits

Tie rod kits as per DIN 835-10.9

Ordering code	Description	recommended stacking length	
		min.	max.
TK 1455	**Tie rod kit M5x70**	**56**	**62**
TK 1482	**Tie rod kit M5x80**	**66**	**72**
TK 1453	Tie rod kit M5x90	76	82
TK 1484	**Tie rod kit M5x100**	**86**	**92**
TK 1446	**Tie rod kit M5x110**	**96**	**102**
TK 1473	**Tie rod kit M5x120**	**106**	**112**
TK 1474	**Tie rod kit M5x130**	**112**	**122**
TK 1405	**Tie rod kit M5x140**	**122**	**132**
TK 1450	**Tie rod kit M5x150**	**132**	**142**
TK 1409	**Tie rod kit M5x160**	**142**	**152**
TK 1411	**Tie rod kit M5x170**	**152**	**162**
TK 1454	**Tie rod kit M5x180**	**162**	**172**
TK 1415	**Tie rod kit M5x190**	**172**	**182**
TK 1416	**Tie rod kit M5x200**	**182**	**192**
TK 1475	**Tie rod kit M5x210**	**192**	**202**
TK 1407	Tie rod kit M5x220	202	212
TK 1413	Tie rod kit M5x230	212	222
TK 1434	Tie rod kit M5x240	222	232
TK 1436	Tie rod kit M5x250	232	242
TK 1438	Tie rod kit M5x260	242	252
TK 1476	Tie rod kit M5x270	252	262
TK 1485	Tie rod kit M6x80	66	71
TK 1486	**Tie rod kit M6x90**	**76**	**81**
TK 1487	**Tie rod kit M6x100**	**86**	**91**
TK 1418	**Tie rod kit M6x110**	**96**	**101**
TK 1488	Tie rod kit M6x120	106	111
TK 1489	**Tie rod kit M6x130**	**112**	**121**
TK 1490	**Tie rod kit M6x140**	**122**	**131**
TK 1422	**Tie rod kit M6x150**	**132**	**141**
TK 1491	**Tie rod kit M6x160**	**142**	**151**
TK 1423	**Tie rod kit M6x170**	**152**	**161**
TK 1492	**Tie rod kit M6x180**	**162**	**171**
TK 1493	**Tie rod kit M6x190**	**172**	**181**
TK 1427	**Tie rod kit M6x200**	**182**	**191**
TK 1494	**Tie rod kit M6x210**	**192**	**201**
TK 1428	Tie rod kit M6x220	202	211
TK 1460	Tie rod kit M6x230	212	221
TK 1495	Tie rod kit M6x240	222	231
TK 1432	Tie rod kit M6x250	232	241
TK 1496	**Tie rod kit M6x260**	**242**	**251**
TK 1497	Tie rod kit M6x270	252	261
TK 1469	Tie rod kit 4 x M10x170 / 2 x M6x170	152	155
TK 1478	Tie rod kit 4 x M10x190 / 2 x M6x190	172	175
TK 1470	Tie rod kit 4 x M10x220 / 2 x M6x220	202	205
TK 1479	Tie rod kit 4 x M10x250 / 2 x M6x250	232	235

TK-M5 NUT	Nut M5 (10 pcs.)
TK-M6 NUT	Nut M6 (10 pcs.)
TK-M10 NUT	Nut M10 (10 pcs.)

If no other specification is indicated, 1 tie rod kit contains 4 bolts and 4 nuts.

$b_1 \geq 1.5d$
$b_1 < b$
$b_1 < T$

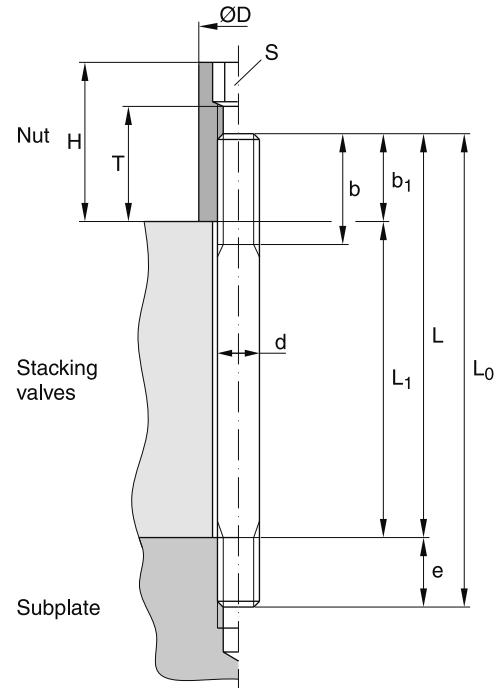

d	D	S	H	T	e	b 1)	b 2)	b 3)
M5	9	5	25	20	10	16	22	22
M6	10	6	25	20	12	18	24	24
M10	17	10	25	15	15	26	32	45

b 1) $L \leq 120$ mm
b 2) 130 mm $\leq L \leq$ 200 mm
b 3) 200 mm $< L$

Example:

TK1411: M5 x 170 DIN835 =
nominal stud length L = 170 mm.
stacking length L_1 = 160 mm
total stud length L_0 = 180 mm

Note:

The torque for bolt kits or tie rod kits is according to valve type/product. Consult product chapters.

Bold letters =
Short-term availability

12

access12.INDD CM 17.04.15

The pressure gauge selector valve allows to connect up to 5 or 10 measuring points to one pressure gauge. When measuring is completed, the gauge is pressure-relieved to prevent it from being damaged by pressure surges. The accuracy and life time of the pressure gauge are thus increased considerably.

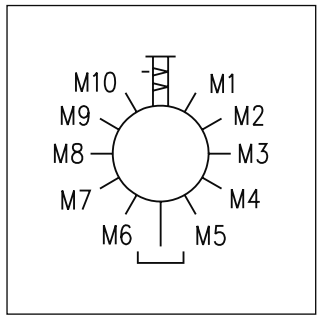

Design

Pressure gauge selector valve with locking, pressure-relieving piston. Measuring point selection by marked rotary handle and graduated dial.

Function

To select one of the measuring points from 1 to 5 or 1 to 10, the rotary handle is pulled out fully, and turned to the left or right. When the measuring point is selected by means of the handle marking and the dial, the handle is pushed in and the pressure gauge loaded with the pressure present. The piston is locked in the measuring position by a catch. When measuring is completed, the handle is pulled out, to relieve the pressure gauge via the drain line.

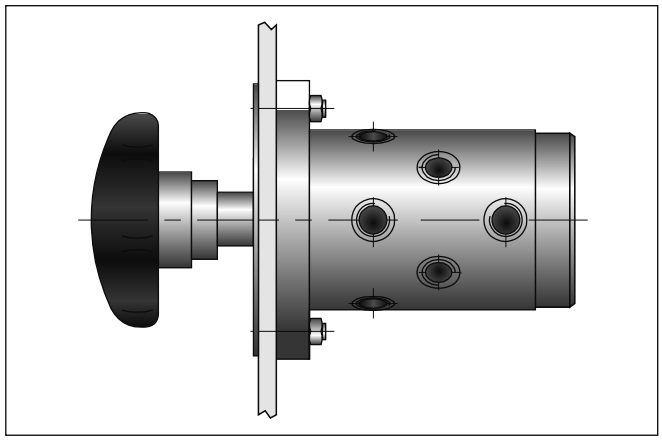

Features

- 5 or 10 measuring positions optional
- Extends the service life of the manometer by unloading the pressure

Ordering code

WM		A	
Pressure gauge selector valve	Measuring points	Design	Design series (not required for ordering)

Code	Measuring
5	**5 points**
10	**10 points**

Bold letters =
Short-term availability

Technical data

General		
Mounting position		unrestricted
Ambient temperature	[°C]	-20...+60
Mounting		panel mounted
Connections		G⅛
Operation		by hand
Seals		Fluorocarbon
Measuring position selection		by turning handle
Weight	[kg]	1.8
Hydraulic		
Max. operating pressure	[bar]	315
Fluid		Hydraulic oil according to DIN 51524
Fluid temperature	[°C]	-20…+70
Viscosity range, permitted recommended	[cSt]/[mm²/s] [cSt]/[mm²/s]	20...400 30...80
Filtration		ISO 4406 (1999); 18/16/13
Max. pressure in drain port Le	[bar]	1.0

WM UK.INDD CM 17.04.15

WM5A*

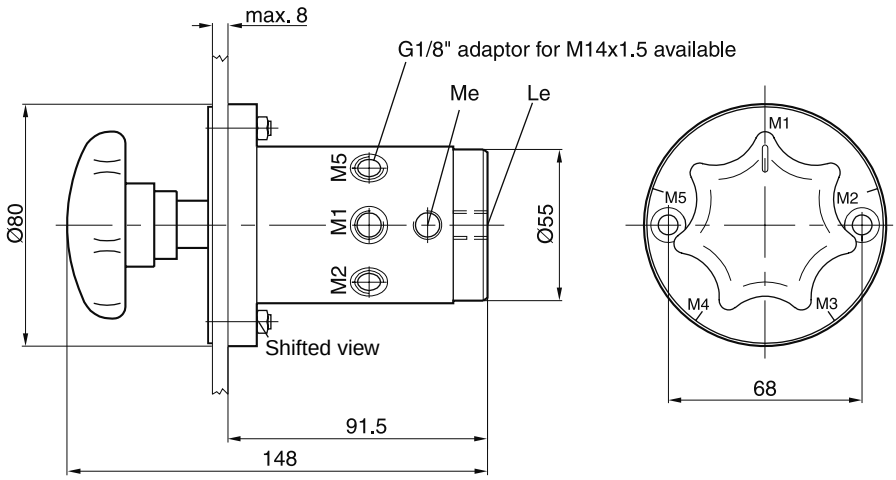

WM10A*

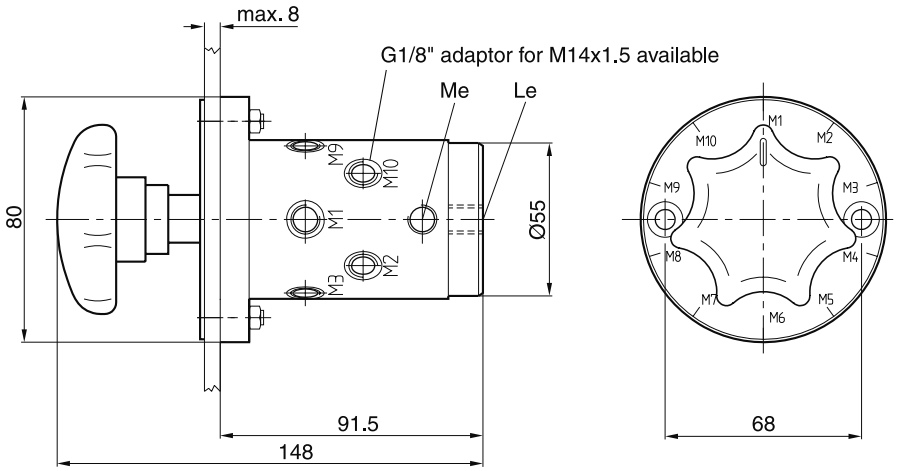

Mounting opening

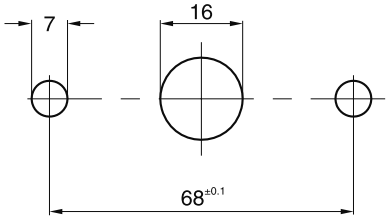

12

The electro-hydraulic pressure switch provides an electric signal when the sensed pressure goes above or below the selected setting.

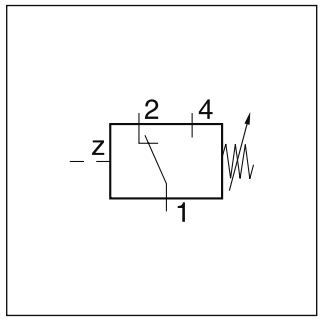

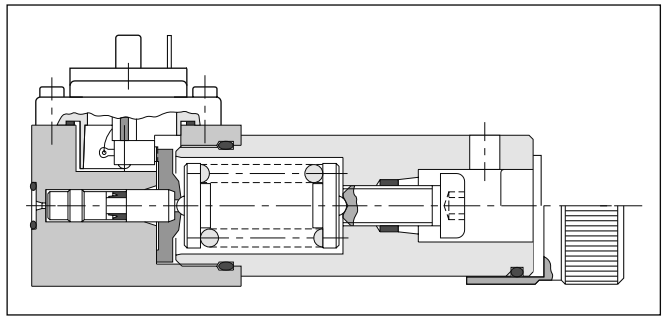

Function

The spring loaded piston is hydraulically dampened. The PSB provides a very accurate hysteresis between the switching points (see diagram).

The required operating pressure is adjusted by the set-screw. Unauthorised adjustments can be prevented by the optional cylinder lock. The electric element is a micro switch with snap-action contact. Three terminals permit application as "On", "Off" or "Changeover" switch.

The electrical connection is made with a 3-pole plug-in connector to EN 175301-803 with ground.

Note

For inductive DC loads a spark discharger should be used to increase service life.

Features

- Flange or pipe mounting
- 4 pressure ranges
- Can be used as opener or closer
- Cylinder lock optional

Ordering code

PSB [ ] [ ] [ ] [ ] [ ] [ ]

Pressure switch with manual switching point adjustment | **Switching pressure range** | **Adjustment** | **Connec-tion** | **Seal** | **Design series** (not required for ordering) | **Lock**

Code	Switching pressure range
040	**3 to 40 bar**
100	**10 to 100 bar**
160	**10 to 160 bar**
250	**20 to 250 bar**

Code	Adjustment
A	**Hexagon socket**
S	Knob with scale

Code	Connection
F1	**Flange (front face)**
V1	**Fitting (front face, tube Ø6)**

Code	Lock
–	**without lock**
Z	Cylinder lock (not for scale knob)

Code	Seal
A	**NBR**
1	FPM

Bold letters =
Short-term availability

12

PSB UK.INDD CM 17.04.15

Technical data

General		
Symbol		DIN 24340
Design		Plunger type switch
Mounting		PSB*F1* flange (front face) PSB*V1 pipe mounting
Mounting position		unrestricted
Ambient temperature	[°C]	-20 ... +60
$MTTF_D$ value	[years]	150
Weight	[kg]	1.0
Hydraulic		
Operating pressure	[bar]	to 315
Actuating pressure difference		see diagram
Duty cycle		max. 1/s
Fluid		Hydraulic oil according to DIN 51524
Fluid temperature	[°C]	-20...+70 (NBR: -25...+70)
Viscosity, permitted recommended	[cSt] / [mm²/s] [cSt] / [mm²/s]	20 ... 400 30 ... 80
Filtration		ISO 4406 (1999); 18/16/13
Electrical connection		Plug-in connector to EN 175301-803
Insulation		IP65 as per EN 60529 (with correctly mounted plug-in connector)
Contact load carrying capacity		5 A at 250 VAC; 1 A at 50 VDC; 0.2 A at 250 VDC

Plug EN 175301-803

Description	Threaded cable joint	Ordering code
Plug EN 175301-803, design type AF, protection class IP65	PG11	**HR 21500157**
Plug with LED, 12...230 V AC/DC, protection class IP65	PG11	**HR 21502321**

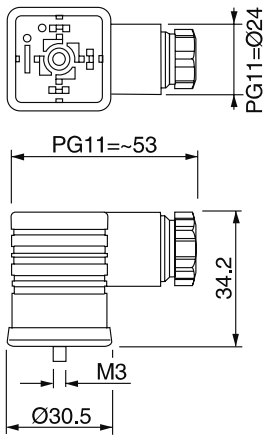

12

Switching pressure difference

PSB040

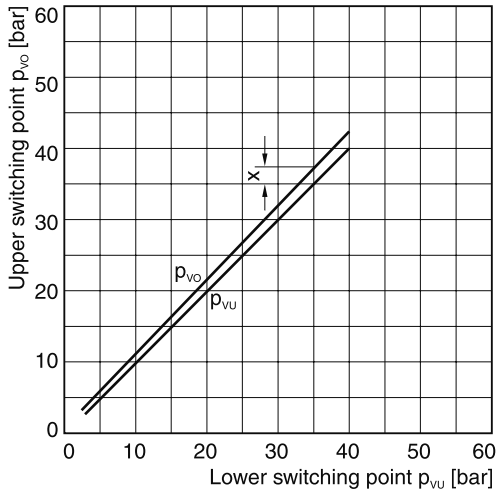

PSB100

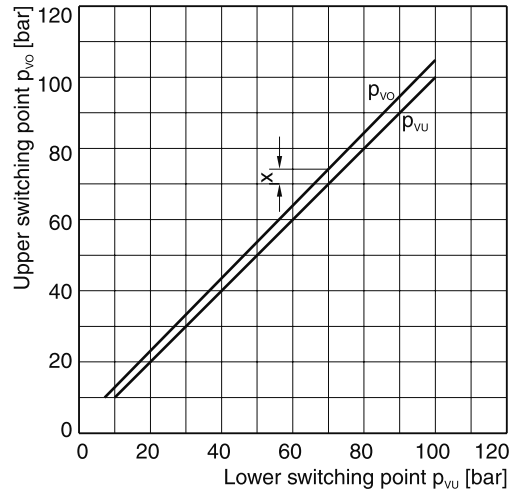

PSB160

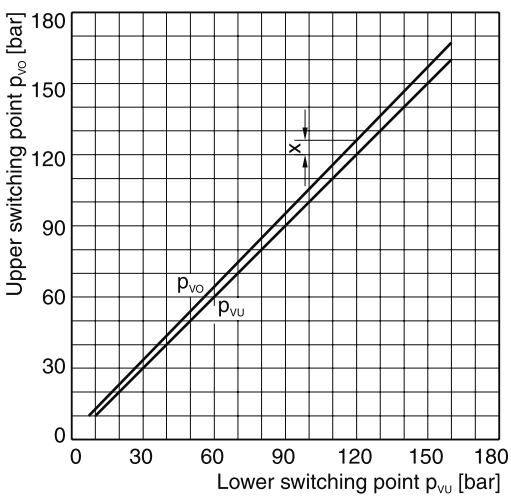

PSB250

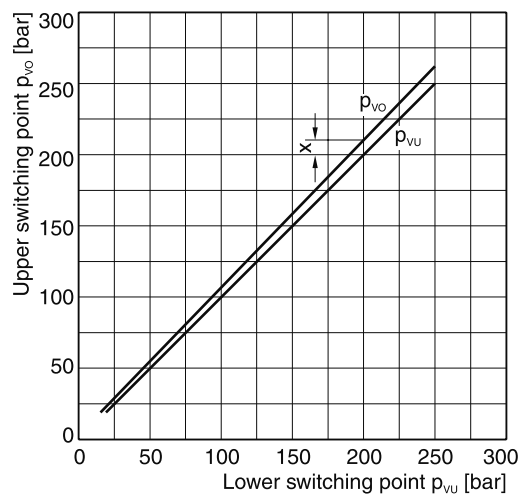

X = switching differential

All characteristic curves measured with HLP46 at 50 °C.

12

Electrical connections

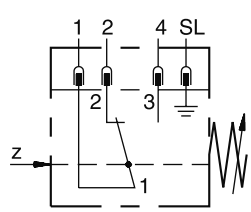

Electrical connection EN175301-803

PSB*F1*

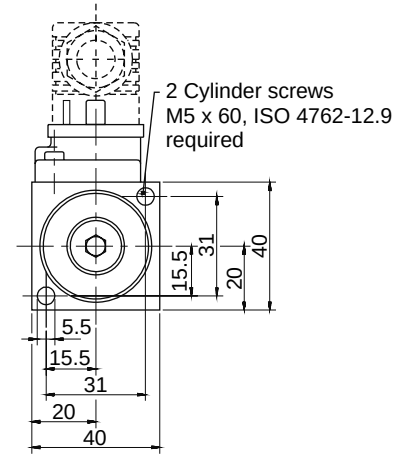

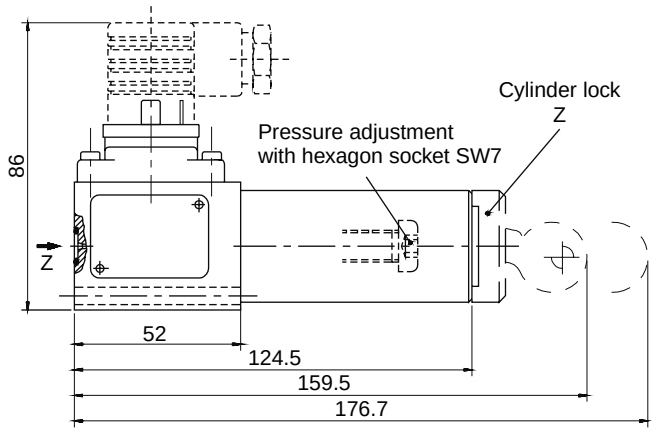

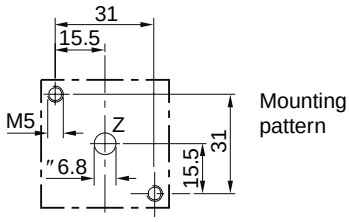

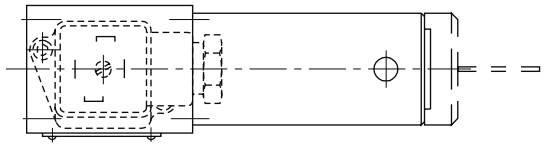

PSB*V1*

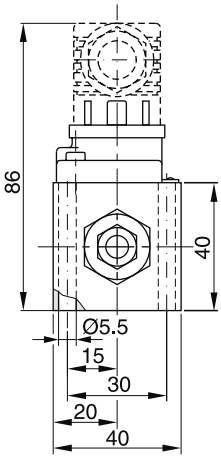

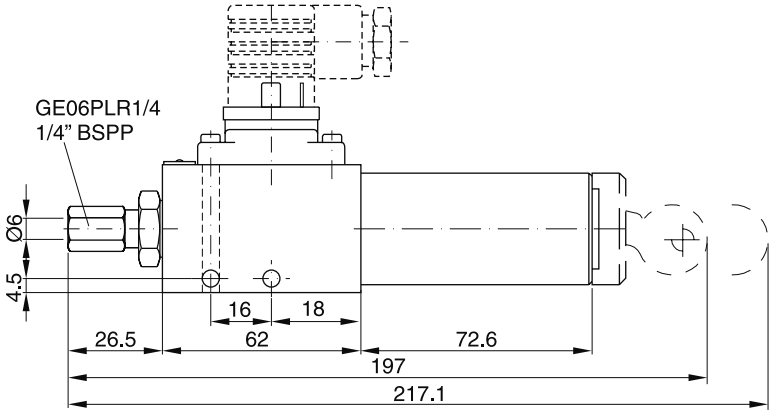

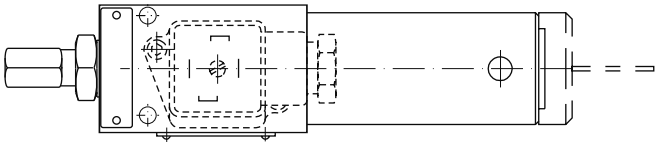

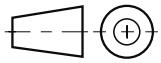

12

Technical Data

Switch code	Ordering code	Nominal size	Function
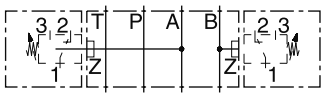	**H06PSB-994**	**06**	**Pressure switch connection to A or B or A and B: Connections not used are closed by plug.**
	H10PSB-996	**10**	
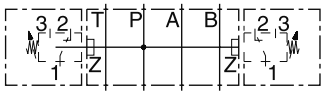	H06PSB-993	06	Pressure switch connection to P (left or right mounting is possible). Connection not used is closed by plug.
	H10PSB-995	10	

Bold letters =
Short-term availability

Dimensions NG06

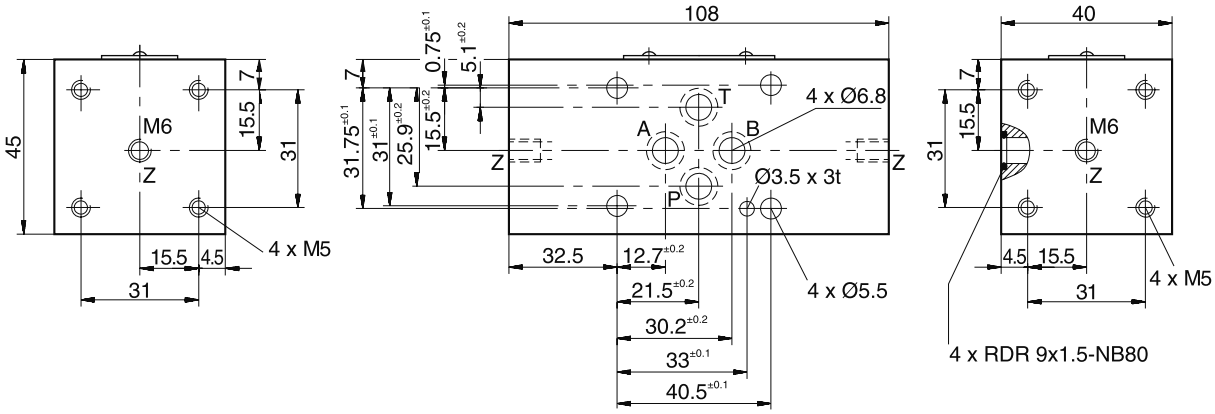

Dimensions NG10

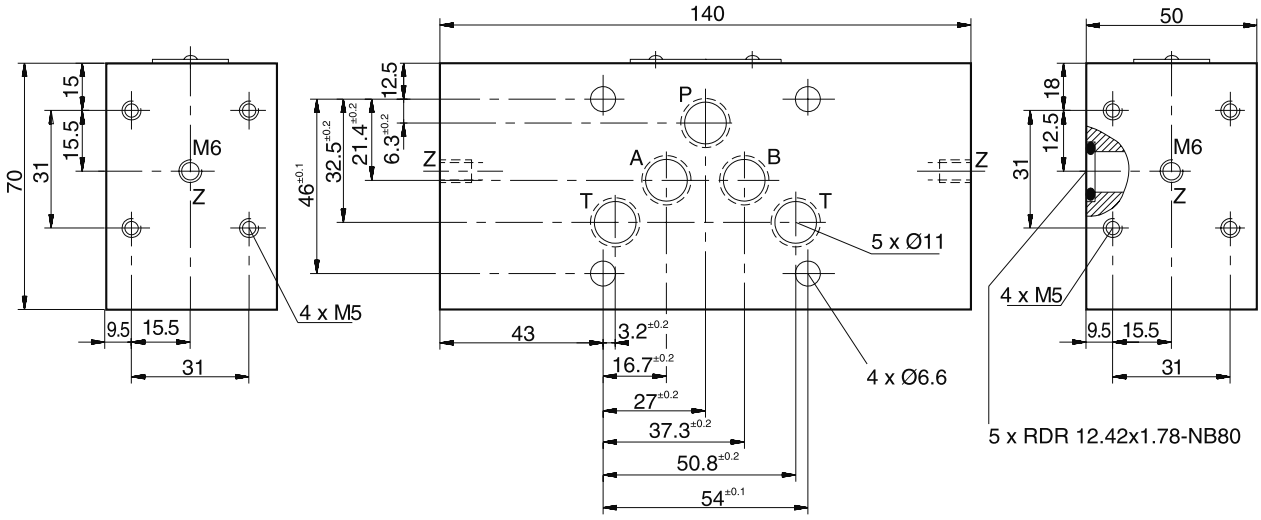

12

PSB UK.INDD CM 17.04.15

- Compact
- Rugged
- Reliable
- Easy operation
- Long-term stability
- Excellent interference resistance
- Metal housing
- High protection class
- Many variants
- Rotatable
- Analogue output
- Password
- MPa, bar, psi

The Pressure Controller combines the functions of a pressure switch, a pressure sensor and a display instrument:

- Pressure display (manometer)
- Switching outputs
- Analogue signal

Simple operation, compact design and high reliability are the most important features of the SCPSD. The Pressure Controller offers excellent technical performance and optimum pressure management. It is ideal for permanent use in industrial applications.

Easy to operate

Parameter setting is carried out via the keys or with a programming module.

High functionality

Every switching output can be set individually:

- Normally closed/normally open contacts
- On and off switching pressures
- Delay times
- Hysteresis/window function
- Damping

Intelligent settings which are not possible with a mechanical switch can be achieved with these convenient switch functions. Several switches can be replaced by a single controller.

The analogue output is individually settable

- 0/4…20 mA switchable
- Settable initial pressure
- Settable final pressure

Reliable/safe

Pressure is captured by a measuring cell with long-term stability. Any functional error is monitored and can be processed in accordance with DESINA. Thanks to a password, unauthorized change of parameters is prevented.

Rugged

The housing is made of metal and is resistant to humidity, shock and vibrations. The electronics are protected from reverse polarity, overvoltage and short circuits.

Everything within view

The large illuminated display is readable even from a considerable distance. Pressures are shown in MPa, bar or psi.

Optimum installation possibilities

With its compact design and excellent interference resistance the SCPSD is suitable for installation under critical conditions.

With its directionally settable housing, the display can always be read very easily.

Universal

Many versions are available to suit a wide variety of applications.

Instrument Features

- Optical interface
- Switch status display

Everything in view

- Chamfered display
- Digital display
- Large
- Luminescent
- Display
- psi/bar/Mpa
- Actual pressure
- Minimum pressure
- Maximum pressure
- Switching points

Easy to operate

- 3 large keys
- Display of units

Pressure connection

- Stainless steel
- Measuring cell stable long-term
- Wide media tolerance

Rugged

- Metal housing
- Watertight
- High interference resistance
- Vibration resistant
- Shockproof

Flexible installation

- Compact
- Rotatable 290°

Thread

- Internal thread
- External thread

Tube clamp

- Safe mounting with a rugged SCSD-S27 clamp

Programming module

- Can be set with ControllerWIN software

12

SCPSD	004	010	016	060	100	250	400	600
Pressure range P_n (bar)	-1...4	-1…10	-1...16	0…60	0…100	0…250	0…400	0…600
Overload pressure P_{max} (bar)	10	20	40	120	200	500	800	1200
Burst pressure P_{burst} (bar)	12	25	50	550	800	1200	1700	2200
Measuring element	Ceramic low pressure			DMS thin film high pressure				

Input quantities	
Reversing cycles	≥ 100 Mio.
Scanning rate	≥ 5 ms
Connecting thread	G1/4 BSPP; ED soft seal NBR [1)] (DIN 3852 T2, form X); ED (DIN3852 T11, form E)
Torque	35 Nm
Parts in contact with media	Low pressure: 1.4404 stainless steel; AL2O3 ceramic; NBR high pressure: stainless steels 1.4404; 1.4542
Temperature range of medium	-20 …+85 °C
Weight	approx. 300 g
Output quantities	
Accuracy	± 0.5 % FS typ.; ± 1 % FS max.
Temperature drift	± 0.02 % FS/°K typ. (at -20…+85 °C) ± 0.03 % FS/°K max.
Long-term stability	± 0.2 % FS/a
Repeat accuracy	± 0.25 % FS
Switching point accuracy	± 0.5 % FS typ.; ± 1 % FS max.
Display accuracy	± 0.5 % FS typ. ± 1 Digit ± 1 % FS max. ± 1 Digit
Response speed	
Switching output	≤ 10 ms
Analogue output	≤ 10 ms
Electrical connection	
Power supply	15…30 VDC nominal 24 VDC; protection class 3
Electrical connection	M12x1; 4-pole; 5-pole with gold-plated contacts. appliance inlet connector DIN EN 175301-803 form A (formerly DIN43650)
Short circuit protection	yes
Reverse polarity protection	yes
Overload protection	yes
Current consumption	< 100 mA

Housing	
	directionally adjustable up to 290°
Material	pressure die-casting Z 410; painted
Foil material	polyester
Display	4-figure 7-segment LED; red; digit height 9 mm
Protection class	IP67 DIN EN 60529; IP65 with plug-in connector DIN EN 175301-803 form A (formerly DIN43650)
Environmental conditions	
Environmental temperature range	-20…+85 °C
Storage temperature range	-40…+100 °C
Vibration resistance	20 g; 10…500 Hz IEC60068-2-6 [2)]
Shock resistance	50 g; 11 ms IEC60068-2-29 [2)]
EM compatibility	
Interference emissions	EN 61000-6-3
Interference resistance	EN 61000-6-2
Outputs	
Switching outputs	2 MOSFET high side switches (PNP)
Contact functions	normally open/normally closed; window/hysteresis; freely settable function
Switching voltage	Power supply - 1.5 VDC
Switching current max.	0.5 A per switch
Short circuit current	2.4 A per switch
Analogue output	0/4…20 mA; programmable; freely scalable; RL ≤ (power supply - 8 V)/ 20 mA (≤ 500 Ω)

[1)] Other sealing materials (FPM, EPDM etc.) on request.
[2)] Does not apply to DIN EN 175301-803 form A (formerly DIN43650) version.

SCPSD-xxx-04-x6

1 switching output;
DIN EN 175301-803 form A (formerly DIN43650)

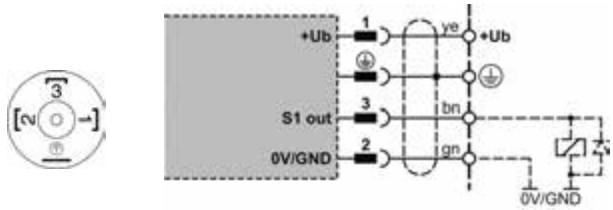

SCPSD-xxx-04-x7

2 switching outputs;
M12x1; 4-pole

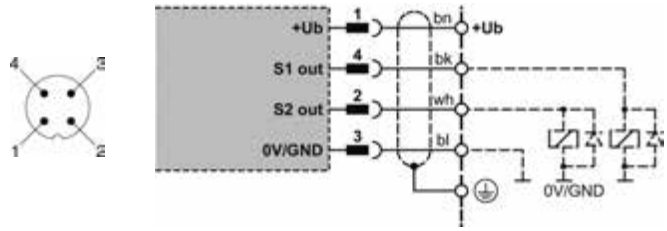

SCPSD-xxx-14-x7

1 switching output;
1 analogue output;
M12x1; 4-pole

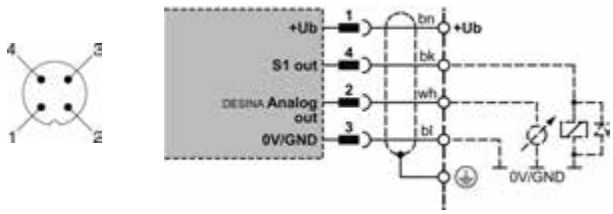

SCPSD-xxx-14-x5

2 switching outputs;
1 analogue output;
M12x1; 5-pole

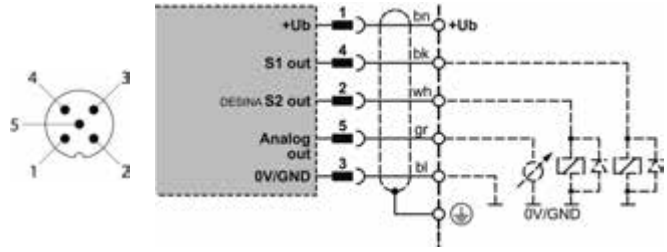

ye = yellow gn = green wh = white gr = grey
bn = brown bk = black bl = blue

Measurement range (bar)	Display resolution increment (bar)	Smallest reverse switch value RSP	Greatest switch value SP	Smallest settable difference between SP and RSP (SP-RSP)
-1…4	0.01	-1	4	0.08
-1…10	0.01	-1	10	0.05
-1…16	0.01	-1	16	0.09
0…60	0.1	0	60	0.3
0…100	0.1	0	100	0.6
0…250	1	0	250	2
0…400	1	0	400	3
0…600	1	0	600	3

12

Pressure range selection

With pressure switches the settable pressure is very relevant.

Because a 400 bar pressure switch shows the same resolution (1 bar) as a 600 bar pressure switch (also 1 bar), a 600 bar pressure switch can be deployed even at a smaller nominal pressure (eg. 315 bar).

The positive effects of this are the same accuracy with higher safety and fewer product variants.

External thread

SCPSD-xxx-x4-1x

High and low pressure
DMS/ceramic

Internal thread

SCPSD-xxx-x4-2x

High pressure (from 60 bar)
DMS

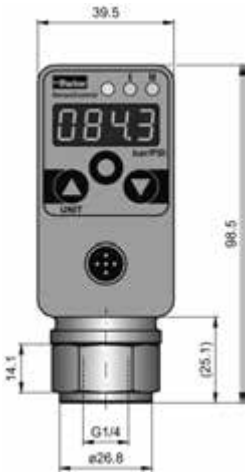

Low pressure (up to 16 bar)
Ceramic

M12 plug-in connector

SCPSD-xxx-x4-x5

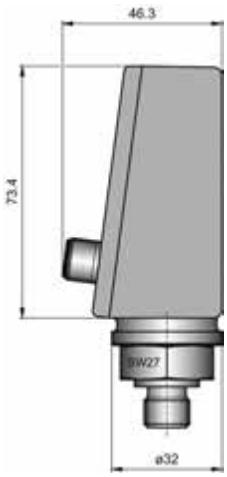

DIN EN 175301-803 form A (formerly DIN43650)

SCPSD-xxx-04-x6

Accessories

Clamp

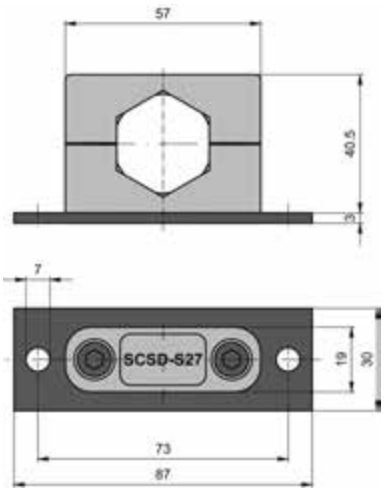

12

SCPSD digital pressure switch

Pressure range
004; 010; 016; 060; 100; 160, 400; 600 bar

1 switching output; without analogue output
DIN EN 175301-803 form A
(formerly DIN 43650) plug-in connector — **SCPSD - xxx - 04 - x 6**

2 switching outputs; without analogue output
M12x1 plug-in connector; 4-pole — **SCPSD - xxx - 04 - x 7**

1 switching output; with analogue output
M12x1 plug-in connector; 4-pole — **SCPSD - xxx - 14 - x 7**

2 switching outputs; with analogue output
M12x1 plug-in connector; 5-pole — **SCPSD - xxx - 14 - x 5**

Type
G1/4 BSPP external thread = 1
G1/4 BSPP internal thread = 2

Ordering examples

SCPSD-100-04-27
Pressure range 100 bar
2 switching outputs
G ¼ BSPP internal thread
M12 plug-in connector

SCPSD-60-14-27
Pressure range 60 bar
1 switching output
1 analogue output
G ¼ BSPP internal thread
M12 plug-in connector

SCPSD-004-14-17
Pressure range 4 bar
2 switching outputs
1 analogue output
G ¼ BSPP external thread
M12 plug-in connector

Accessories

PC programming kit	**SCSD-PRG-KIT**
Fixing clamp	**SCSD-S27**
Reducing adaptor M22x1.5	**SCA-¼-M22x1.5-ED**
Reducing adaptor G ½ BSPP	**SCA-¼-ED-½-ED**
Damping adaptor	**SCA-1/X-EDX-1/X-D**
Flange adaptor for mechanical pressure switch	**SCAF-¼-40**

Connecting cable and separate plugs

Connecting cable, ready-made SCK-400-xx-xx
(open cable end)

Cable length in m
02 2 m
05 5 m
10 10 m

Plug-in connector
45 M12 cable socket; straight
55 M12 cable socket; 90° angled
56 DIN EN 175301-803 form A plug connector (formerly DIN 43650)

Separate plugs

M12 cable socket; straight	SCK-145
M12 cable socket; 90° angled	SCK-155
DIN EN 175301-803 Form A plug connector (formerly DIN 43650)	SCK-006

SCPSD UK.INDD CM 17.04.15

Pressure intensifiers are used wherever a particular section of a hydraulic system has to be pressurized to a substantially higher pressure than the available primary pressure (clamping functions). With an intensification ratio of 1 : 4 (1 : 2, 1 : 6) it enables a cost-effective system solution especially in clamping applications, with primary pressures up to 125 bar. A pilot operated check valve can be flanged underneath the pressure intensifier for quick filling and decompression of the high pressure section.

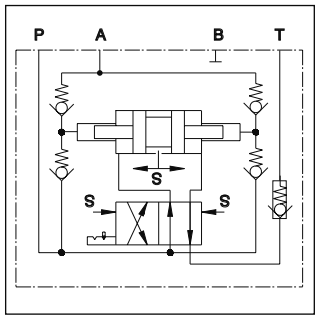

Features

- Mounting pattern NG06, DIN 24 340 Design A, CETOP, ISO
- Check valve attachable to bottom flange
- High pressure up to 500 bar
- Volume flow formed with low pulsation
- Compact design

Design

Main functional parts of the pressure intensifier:
piston, rocker mechanism, slide valve with lock,
4 check valves which separate the high pressure section from the low pressure section, check valve in the tank port to partition of the tank section from the primary pressure.

Function

After the high pressure section is filled with oil, (e.g. extension of a clamping cylinder), the pressure intensifier begins operation: The low pressure moves the intensifier piston because of the surface ratio and compresses the oil column in the high pressure section.

At the end of the intensifier's piston stroke, the rocker mechanism switches the directional slide valve to the crossed switching position, and the intensifier piston pumps oil from the piston rod area into the high pressure section. The process repeats itself until the pressure ratio corresponding to the surface ratio has lead to a balance of force on the intensifier piston.

The pressure intensifier switches itself off and immediately on again when the high pressure (e.g. due to external leakage) begins to drop (pay attention to the flow characteristic). The switching speed of the slide valve is dependent on the operating speed of the intensifier piston.

Note

- To avoid exceeding the admissible maximum pressure, a pressure relief or pressure control valve must be fitted on the primary side (pressure setting, max. 125 bar / 1 : 4, max. 250 bar / 1 : 2 or max. 83 bar / 1 : 6).
- There must be no pressure peak on the primary side when operating in the maximum pressure range.
- It is recommended to mount a 10µm filter on the primary side to ensure damage-free operation.

Ordering code

SD	500		06	V	
Pressure intensifier	**Working pressure 500 bar (max. pressure)**	**Intensification ratio**	**Nominal size (pressure intensifier) Interface DIN 24 340 Design A, CETOP, ISO**	**Seals FPM**	**Design series** (not required for ordering)

Code	Intensification ratio
A	**1 : 4**
B	**1 : 2**
C	**1 : 6**

Bold letters =
Short-term availability

12

Technical data

General		
Symbol		DIN 24 300
Design		Piston and poppet valve in body
Mounting type		NG06, DIN 24 340, design A, CETOP, ISO
Ports		Subplate
Mounting position		unrestricted
Ambient temperature	[°C]	-20...+60
$MTTF_D$ value	[years]	150
Weight	[kg]	3.0 kg
Hydraulic		
Max. operating pressure Port A Port P, B, T	 [bar] [bar]	 500, 125 (ratio 1:4), 250 (ratio 1:2)
Fluid		Hydraulic oil according to DIN 51524
Fluid temperature	[°C]	+10...+70
Viscosity, permitted recommended	[cSt] / [mm^2/s] [cSt] / [mm^2/s]	20 ... 400 30...80
Filtration		ISO 4406 (1999); 18/16/13
Flow		see performance curve
Intensification ratio		$p_P : p_A$ = 1 : 4, 1 : 2, 1 : 6
Flow volume		$Q_P : Q_A$ = 4 : 1, 2: 1, 6 : 1
Stroke volume	[cm^3]	3 (per double stroke)
Operating		Hydraulic-mechanic automatic control

Accessories

Type	Description	Number
SD 500*06V	Seals	
	9.25 x 1.78	3
	10.82 x 1.78	1
	M5 x 75 ISO 4762-12.9	4

Seals are included in delivery.
Mounting screws are not included in delivery.

12

Surface finish	Kit		
R_{max}6.3 ▱ 0.01/100	BK401	4x M5x75 ISO 4762-12.9	9.0 Nm

SD500 UK.INDD CM 19.02.15

Flow characteristics

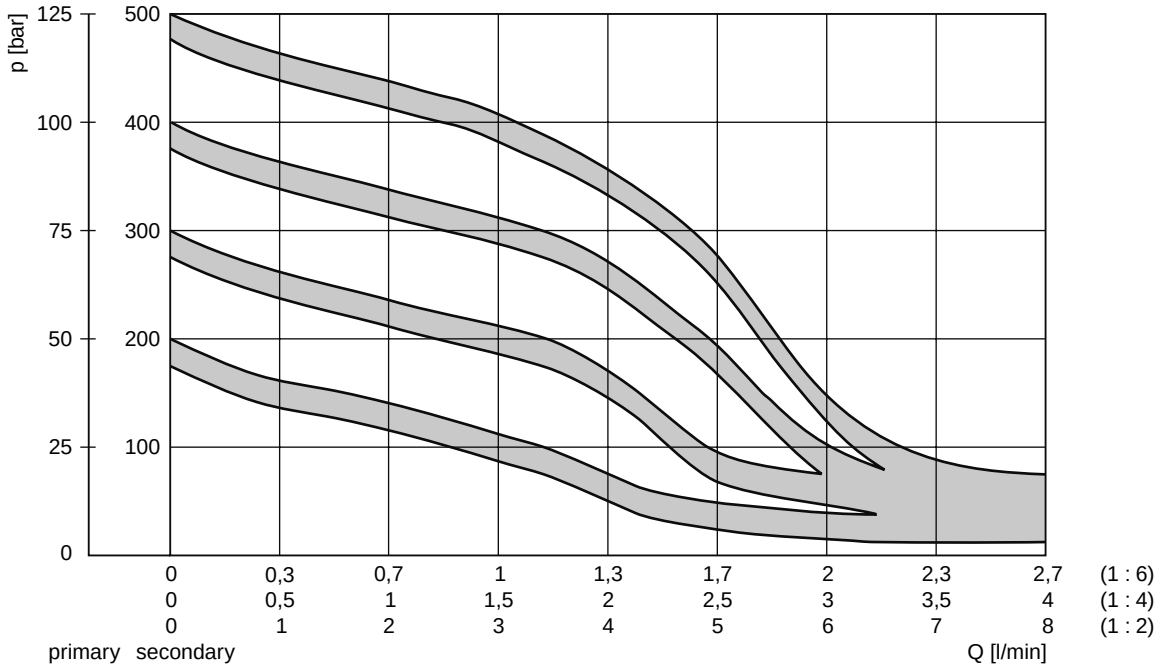

Approximate values of the compression time for compressing a filled volume to target pressure (1 : 4)

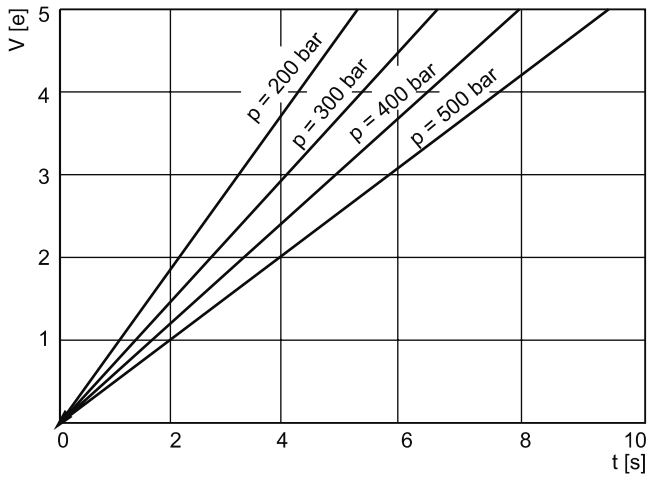

All characteristic curves measured with HLP46 at 50 °C.

Dimensions

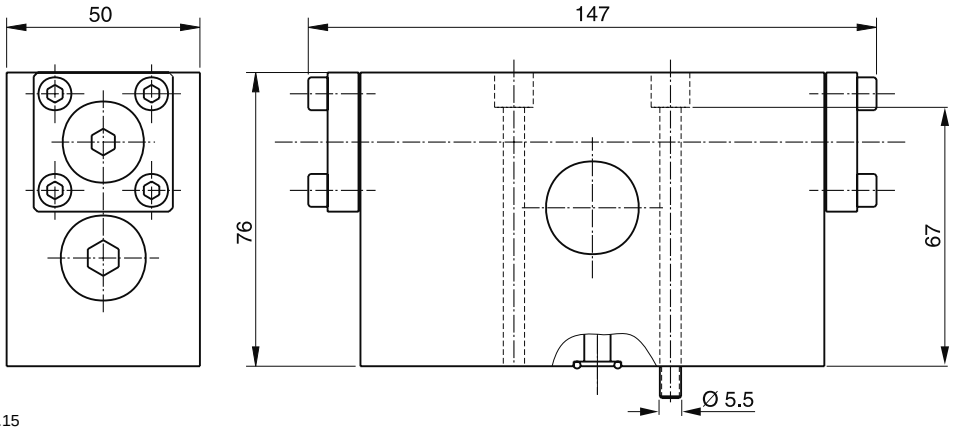

SD500 UK.INDD CM 19.02.15

Pilot operated check valve plate NG06

Description

Pilot operated check valve plates are flanged under the pressure intensifier for quick filling and decompression.

Design

The check valve plate is equipped with a hydraulic, pilot operated check valve.

Opening ratio: Main valve 2.5 : 1

Pilot ratio 10 : 1

Technical data

General		
Design		Spring loaded ball seat valve
Mounting type		Flange
Mounting position		any
Ambient temp.	[°C]	-20...+60
Weight	[kg]	1.3
Hydraulic		
Operating pressure range		
Port A Port P, B, T	[bar] [bar]	max. 500, max. 125 / 1:4 and 250 / 1:2
Fluid		Hydraulic oil according to DIN 51524
Fluid temperature	[°C]	+10...+70
Viscosity, perm. [cSt] / [mm²/s] recom. [cSt] / [mm²/s]		20...400 30...80
Filtration		ISO 4406 (1999); 18/16/13
Flow		see characteristic curve
Pilot ratio		Main valve 2.5:1, pre-discharge 10:1
Opening pressure	[bar]	approx. 0.5

Ordering code

H06 SDV

Bold letters =
Short-term availability

Accessories

Type	Description	Number
H06SDV	Seals	
	9.25 x 1.78	4
	M5x115 ISO 4762-12.9	4

Seals are included in delivery.
Mounting screws are not included in delivery.

Characteristic curve

Pilot operated check valve

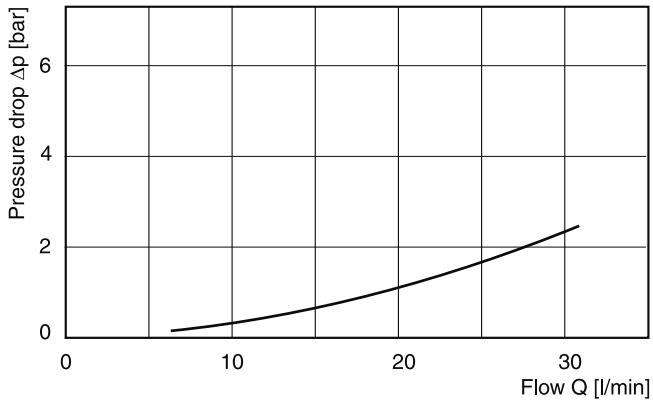

Curve measured with HLP46 at 50 °C.

Dimensions

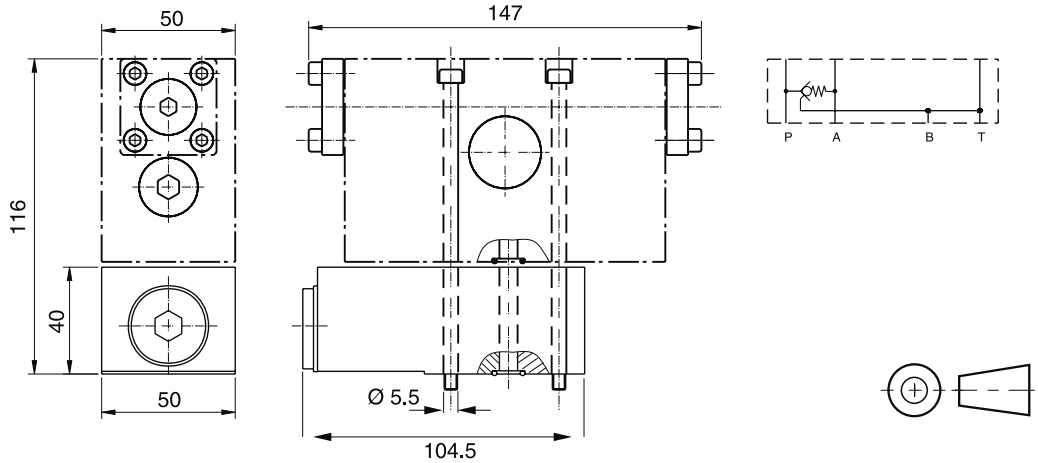

Surface finish	Kit		
R_{max}6.3 ▱ 0.01/100	BK406	4x M5x115 ISO 4762-12.9	9.0 Nm

Pilot operated check valve plate NG10

Description

Pilot operated check valve plates are flanged under the pressure intensifier for quick filling and decompression.

Design

The check valve plate is equipped with a hydraulic, pilot operated check valve.

Opening ratio: Main valve 2.5 : 1

Pilot ratio 10 : 1

Technical data

General	
Design	Spring loaded ball seat valve
Mounting type	Flange
Mounting position	any
Ambient temp. [°C]	-20...+60
Weight [kg]	2.3
Hydraulic	
Operating pressure range	
Port A [bar] Port P, B, T [bar]	max. 500, max. 125 / 1:4 and 250 / 1:2
Fluid	Hydraulic oil according to DIN 51524
Fluid temperature [°C]	+10...+70
Viscosity, perm. [cSt] / [mm²/s] recom. [cSt] / [mm²/s]	20...400 30...80
Filtration	ISO 4406 (1999); 18/16/13
Flow	see characteristic curve
Pilot ratio	Main valve 2.5:1, pre-discharge 10:1
Opening pressure [bar]	approx. 0.5

Ordering code

H10 SDV

Accessories

Type	Description	Number
H10SDV	Seals	
	12.24 x 1.78	4
	M5x75 ISO 4762-12.9	4
	M6x50 ISO 4762-12.9	4

Seals are included in delivery.
Mounting screws are not included in delivery.

Characteristic curve

Pilot operated check valve

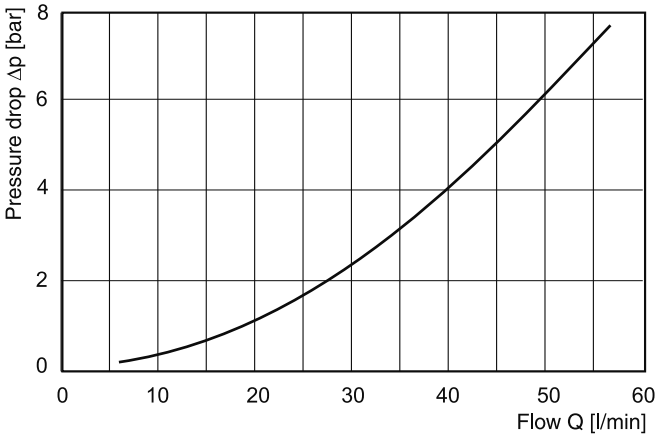

Curve measured with HLP46 at 50 °C.

Dimensions

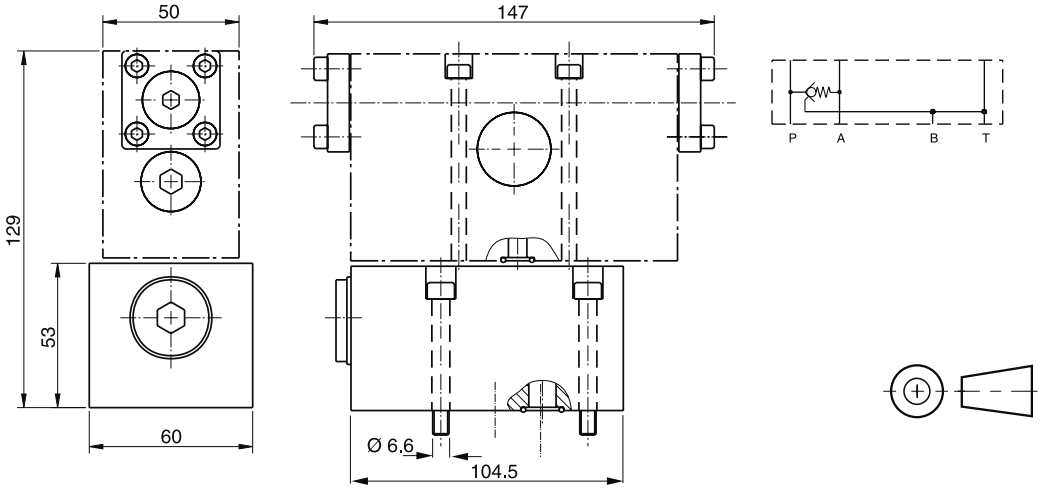

Surface finish	Kit		
$\sqrt{R_{max}6.3}$ ▱ 0.01/100	BK490	4x M5x75 4x M6x50 ISO 4762-12.9	9.0 Nm 18.0 Nm

Notes

Notes

Notes

Parker Worldwide

Europe, Middle East, Africa

AE – United Arab Emirates, Dubai
Tel: +971 4 8127100
parker.me@parker.com

AT – Austria, Wiener Neustadt
Tel: +43 (0)2622 23501-0
parker.austria@parker.com

AT – Eastern Europe, Wiener Neustadt
Tel: +43 (0)2622 23501 900
parker.easteurope@parker.com

AZ – Azerbaijan, Baku
Tel: +994 50 2233 458
parker.azerbaijan@parker.com

BE/LU – Belgium, Nivelles
Tel: +32 (0)67 280 900
parker.belgium@parker.com

BG – Bulgaria, Sofia
Tel: +359 2 980 1344
parker.bulgaria@parker.com

BY – Belarus, Minsk
Tel: +48 (0)22 573 24 00
parker.poland@parker.com

CH – Switzerland, Etoy
Tel: +41 (0)21 821 87 00
parker.switzerland@parker.com

CZ – Czech Republic, Klecany
Tel: +420 284 083 111
parker.czechrepublic@parker.com

DE – Germany, Kaarst
Tel: +49 (0)2131 4016 0
parker.germany@parker.com

DK – Denmark, Ballerup
Tel: +45 43 56 04 00
parker.denmark@parker.com

ES – Spain, Madrid
Tel: +34 902 330 001
parker.spain@parker.com

FI – Finland, Vantaa
Tel: +358 (0)20 753 2500
parker.finland@parker.com

FR – France, Contamine s/Arve
Tel: +33 (0)4 50 25 80 25
parker.france@parker.com

GR – Greece, Athens
Tel: +30 210 933 6450
parker.greece@parker.com

HU – Hungary, Budaörs
Tel: +36 23 885 470
parker.hungary@parker.com

IE – Ireland, Dublin
Tel: +353 (0)1 466 6370
parker.ireland@parker.com

IT – Italy, Corsico (MI)
Tel: +39 02 45 19 21
parker.italy@parker.com

KZ – Kazakhstan, Almaty
Tel: +7 7273 561 000
parker.easteurope@parker.com

NL – The Netherlands, Oldenzaal
Tel: +31 (0)541 585 000
parker.nl@parker.com

NO – Norway, Asker
Tel: +47 66 75 34 00
parker.norway@parker.com

PL – Poland, Warsaw
Tel: +48 (0)22 573 24 00
parker.poland@parker.com

PT – Portugal, Leca da Palmeira
Tel: +351 22 999 7360
parker.portugal@parker.com

RO – Romania, Bucharest
Tel: +40 21 252 1382
parker.romania@parker.com

RU – Russia, Moscow
Tel: +7 495 645-2156
parker.russia@parker.com

SE – Sweden, Spånga
Tel: +46 (0)8 59 79 50 00
parker.sweden@parker.com

SK – Slovakia, Banská Bystrica
Tel: +421 484 162 252
parker.slovakia@parker.com

SL – Slovenia, Novo Mesto
Tel: +386 7 337 6650
parker.slovenia@parker.com

TR – Turkey, Istanbul
Tel: +90 216 4997081
parker.turkey@parker.com

UA – Ukraine, Kiev
Tel: +48 (0)22 573 24 00
parker.poland@parker.com

UK – United Kingdom, Warwick
Tel: +44 (0)1926 317 878
parker.uk@parker.com

ZA – South Africa, Kempton Park
Tel: +27 (0)11 961 0700
parker.southafrica@parker.com

North America

CA – Canada, Milton, Ontario
Tel: +1 905 693 3000

US – USA, Cleveland
Tel: +1 216 896 3000

Asia Pacific

AU – Australia, Castle Hill
Tel: +61 (0)2-9634 7777

CN – China, Shanghai
Tel: +86 21 2899 5000

HK – Hong Kong
Tel: +852 2428 8008

IN – India, Mumbai
Tel: +91 22 6513 7081-85

JP – Japan, Tokyo
Tel: +81 (0)3 6408 3901

KR – South Korea, Seoul
Tel: +82 2 559 0400

MY – Malaysia, Shah Alam
Tel: +60 3 7849 0800

NZ – New Zealand, Mt Wellington
Tel: +64 9 574 1744

SG – Singapore
Tel: +65 6887 6300

TH – Thailand, Bangkok
Tel: +662 186 7000

TW – Taiwan, Taipei
Tel: +886 2 2298 8987

South America

AR – Argentina, Buenos Aires
Tel: +54 3327 44 4129

BR – Brazil, Sao Jose dos Campos
Tel: +55 800 727 5374

CL – Chile, Santiago
Tel: +56 2 623 1216

MX – Mexico, Toluca
Tel: +52 72 2275 4200

© 2015 Parker Hannifin Corporation. All rights reserved.

Catalogue HY11-3500/UK, 2.5M, 05/2015, LB

EMEA Product Information Centre
Free phone: 00 800 27 27 5374
(from AT, BE, CH, CZ, DE, DK, EE, ES, FI, FR, IE, IL, IS, IT, LU, MT, NL, NO, PL, PT, RU, SE, SK, UK, ZA)

US Product Information Centre
Toll-free number: 1-800-27 27 537

www.parker.com

Your local authorized Parker distributor

aerospace
climate control
electromechanical
filtration
fluid & gas handling
hydraulics
pneumatics
process control
sealing & shielding

Valvole idrauliche a cartuccia

Catalogo Europeo Gamma Prodotti

Parker

ENGINEERING YOUR SUCCESS.

AVVERTENZA — RESPONSABILITÀ DELL'UTENTE

GUASTI, SCELTE INAPPROPRIATE O L'USO IMPROPRIO DEI PRODOTTI QUI DESCRITTI O DEI COMPONENTI CORRELATI POSSONO CAUSARE MORTE, INFORTUNI E DANNI MATERIALI.

Il presente documento e le altre informazioni divulgate da Parker Hannifin Corporation, dalle sue consociate e dai distributori autorizzati forniscono opzioni che devono essere ulteriormente analizzate da utenti con competenze tecniche.

L'utente, attraverso processi di analisi e verifica, si assume la responsabilità assoluta della scelta finale del sistema e dei componenti e di garantire che vengano soddisfatti tutti i requisiti dell'applicazione in merito a prestazioni, resistenza, manutenzione, sicurezza e avvertenze. L'utente ha l'obbligo di analizzare tutti gli aspetti dell'applicazione, attenersi agli standard di settore applicabili e seguire le informazioni sul prodotto incluse nel catalogo dei prodotti aggiornato e in qualsiasi altro materiale fornito da Parker o dalle sue consociate o dai distributori autorizzati.

Nella misura in cui Parker o le sue consociate o i distributori autorizzati forniscono componenti o sistemi in base alle informazioni o alle specifiche indicate dall'utente, l'utente ha la responsabilità di verificare che tali informazioni e specifiche siano appropriate e sufficienti per tutte le applicazioni e gli usi ragionevolmente prevedibili dei componenti o dei sistemi.

Offerte di vendita

Contattare il proprio distributore Parker per conoscere le "Offerte di vendita" in dettaglio.

Parker Hannifin Corporation
Hydraulic Cartridge Systems Division
Crewkerne, UK

Serie speciale Catalogo Europeo Gamma Prodotti

Il catalogo Europeo Gamma Prodotti contiene una selezione delle valvole più diffuse e versatili che fanno parte della gamma completa di valvole idrauliche a cartuccia Parker immediatamente disponibili presso il nostro Centro distribuzione europeo (EDCN).

Tutte le valvole del catalogo Europeo Gamma Prodotti sono prodotti collaudati ed ampiamente diffusi in molte applicazioni. I prodotti del catalogo Europeo Gamma Prodotti sono immediatamente disponibili e adatti alla maggioranza delle applicazioni. Per esigenze particolari la nostra gamma prevede anche opzioni speciali, anche se la loro disponibilità è soggetta ai tempi di fabbricazione.

Questo catalogo è strutturato in modo da consentire di selezionare innanzitutto il tipo di valvola, e quindi i requisiti di portata/pressione. Ciò significa che è possibile scegliere una valvola anche se non se ne conosce il codice completo.

I dati di questo catalogo sono limitati all'essenziale. Per informazioni complete su ciascuna valvola, comprese tutte le specifiche e le opzioni, consultare il catalogo principale reperibile presso i distributori Parker, presso EMDC o in alternativa sul sito www.parker.com

Sommario

Indice dei prodotti

	Pagina
Valvole di ritegno	
- A fungo	5
- A sfera	6
- Pilota	6
- Blocchetto, Pilota, Singola e Doppia	7
- Blocchetto, Pilota, Singola e Doppia	8
Valvole pilota	
- A sfera	9
- A cursore	9
Valvole di controllo del carico	
- Bilanciate	10-12
Valvole di regolazione della portata	
- A spillo	13
- Con compensazione di pressione	13-14
- A spillo con dispositivo di non ritorno del flusso inverso	15
- Divisore/combinatore di portata	16
Valvole di massima pressione	
- Ad azione diretta	17
- Area differenziale	18
- Pilota	18-19
- Valvola di massima pressione con pilotaggio	19
- Tipo incrociato	20
- Di scarico	20
Valvole di sequenza	
- Pilota	21
- Ad azione diretta	21
Valvole di riduzione / con pilotaggio	
- Ad azione diretta	22
- Pilota	22
Elementi logici	
- A fungo	23
- A cursore	23
Valvole di controllo direzionale	
- Deviatore	24
- Pilota	24
Elettrovalvole	
- A fungo bidirezionali a 2 vie	25-26
- A fungo a 2 vie	27-28
- A cursore a 2 vie	29-30
- A cursore a 3 vie	31
- A cursore a 2 posizioni e 4 vie	32
- A cursore a 3 posizioni e 4 vie	33-34
Valvole proporzionali	
- Riduttori di pressione	35
- Regolatore di portata normalmente aperto	36
- Regolatori di portata a 2 vie	37
- Regolatori di portata a 3 vie	38
- Comandi direzionali a 4 vie	38-39
- Regolatore di portata normalmente chiuso	40
Bobine	
- Tipo CC	41
- Tipo CA	42
Corpi	
- CETOP 3, Cartpak	43-47
- Standard, acciaio	48-49
- Controllo del carico	50-53
- Acciaio, speciale	54-55

Tipo a fungo

Dimensioni millimetri (pollici)

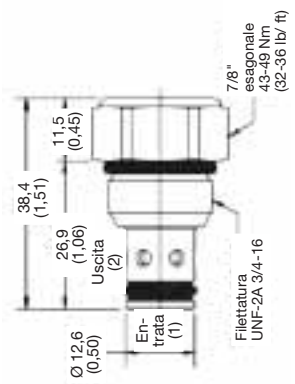

CVH081P

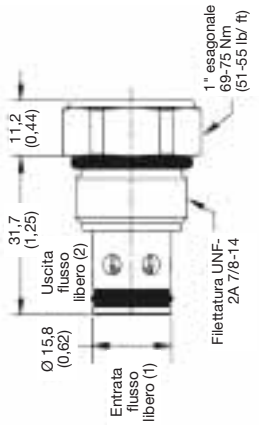

CVH103P

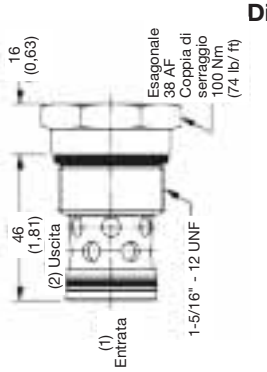

D06B2-0.1N

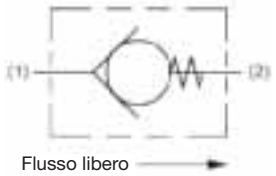

Serie	Corpo	Pressione massima di ingresso (bar)	Pressione di apertura (bar)	Portata (l/min)	Caratteristiche
CVH081P	B08-2-6B	350	0,3	38	• Fungo a forma sferica soltanto per tipo CVH a basso trafilamento. • Bassa caduta di pressione. • Buona tolleranza alla contaminazione.
CVH103P	B10-2-8B	350	0,3	60	
D06B2P-0.1N	B16-2-16B	420	0,1	280	

Tipo a fungo - inserto valvola

Dimensioni millimetri (pollici)

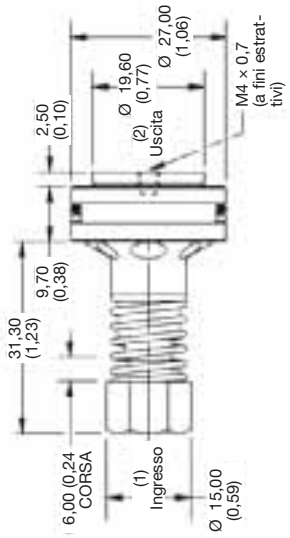

D1B125-0.2N

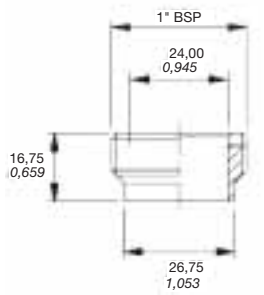

Fermo

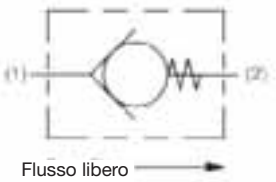

Nota:
la valvola è dotata di guarnizione elastica (rif. 8010977).
In alternativa alla fascia elastica, per bloccare l'inserto valvola di ritegno sotto la porta BSP da 1" è possibile utilizzare il fermo filettato da ordinare separatamente.

Per 1" BSP ordinare il riferimento RT10001 - Serrare a 85 Nm (63 lb/ft).

Serie	Corpo	Pressione massima di ingresso (bar)	Pressione di apertura (bar)	Portata (l/min)	Caratteristiche
D1B125-0.2N	LB10210S	420	0,2	300	• Portata elevata

Tipo a sfera

Dimensioni millimetri (pollici)

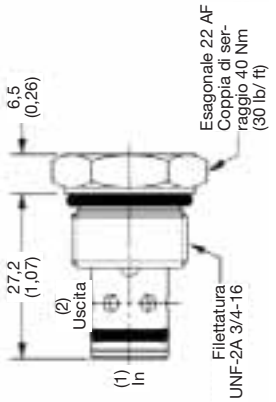

D02B2

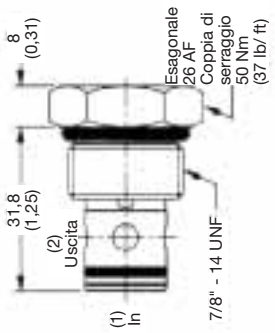

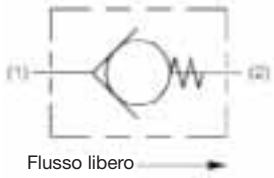

D04B2

Serie	Corpo	Pressione massima di ingresso (bar)	Pressione di apertura (bar)	Portata (l/min)	Caratteristiche
D04B2-0,2N	B08-2-6B	420	0,2	45	• Struttura del tipo a sfera per un design economico. • Pilotaggio singolo e doppio per costruire gruppi valvola di ritegno PO. • Solo cartuccia
D04B2-2.1N	B08-2-6B	420	2,1	45	
D04B2-0,2N	B10-2-8B	420	0,2	90	
D04B2-2.1N	B10-2-8B	420	2,1	90	

Pilota

Dimensioni millimetri (pollici)

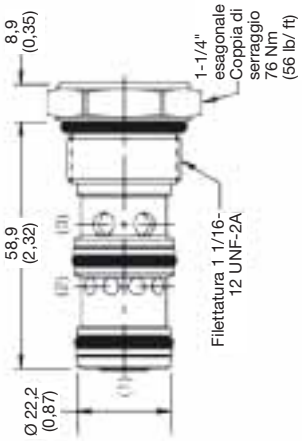

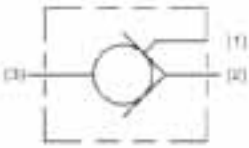

CPH104P

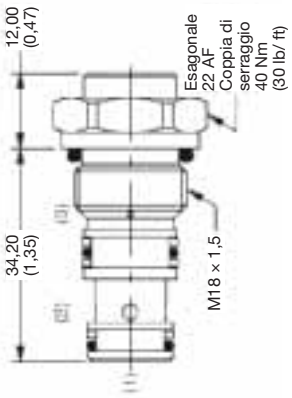

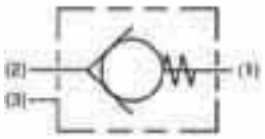

D4A020N

Serie	Corpo	Pressione massima di ingresso (bar)	Pressione di apertura (bar)	Portata (l/min)	Caratteristiche
CPH104P	B10-3-8B	350	2,1	30	• Struttura estremamente compatta. • Pilota stagno
D4A020N	LB10310S	420	5	16	

Parker Hannifin Corporation
Hydraulic Cartridge Systems Europe
Crewkerne, UK

Tipo con pistone pilota

Dimensioni millimetri (pollici)

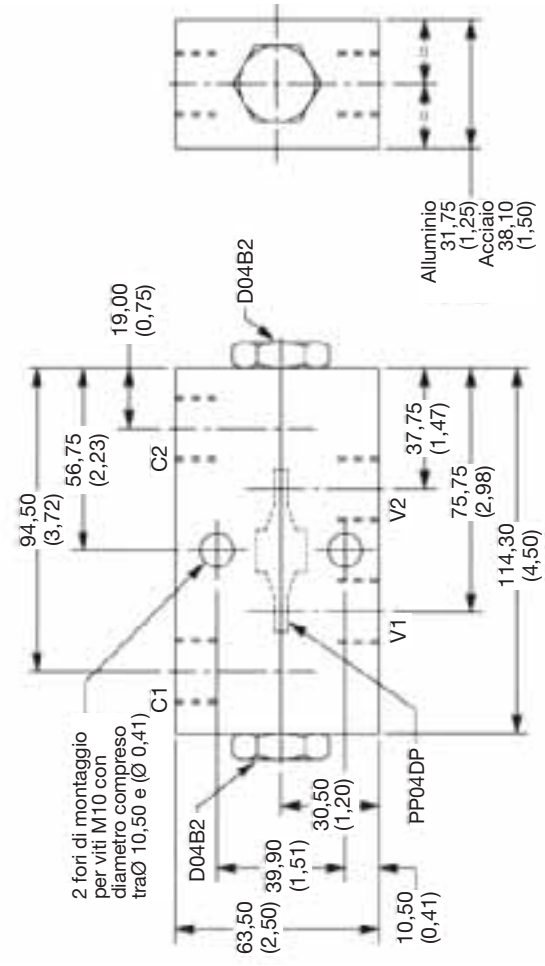

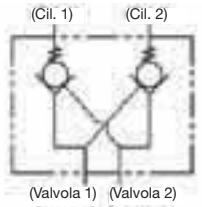

PP04DP2.1N766S

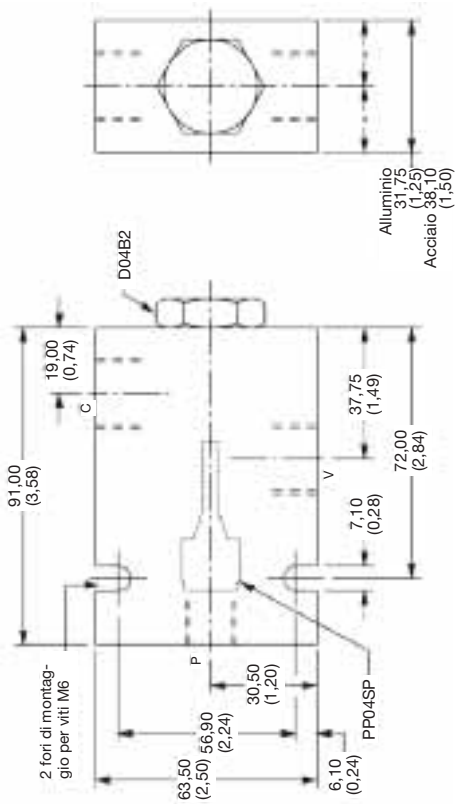

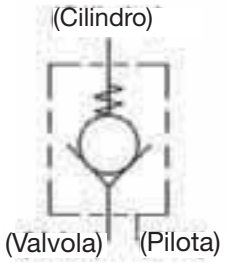

PP04SP2.1N761S

Serie	Rapporto pilota	Pressione massima di ingresso (bar)	Pressione di iapertura (bar)	Portata (l/min)	Caratteristiche
PP04DP2.1N766S	4:1	420	2,1	40	• Gruppo completo • Blocchetto valvola di ritegno azionata da pilota doppio con porte da 3/8 BSP.
PP04SP2.1N761S	3:1	420	2,1	135	• Gruppo completo • Blocchetto valvola di ritegno azionata da singolo pilota con da porte 1/2 BSP.

Parker Hannifin Corporation
Hydraulic Cartridge Systems Europe
Crewkerne, UK

Pilotaggio singolo

Dimensioni millimetri (pollici)

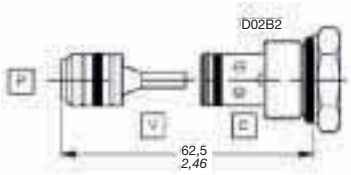

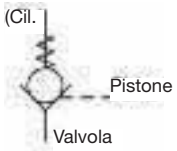

PP02SP

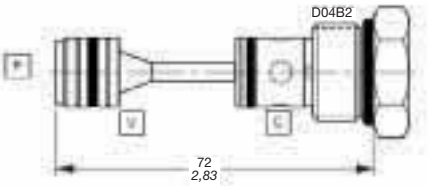

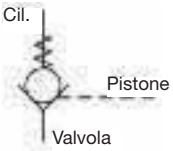

PP04SP

Serie	Rapporto pilota	Pressione massima di ingresso (bar)	Pressione di apertura (bar)	Portata (l/min)	Caratteristiche
PP02SP	4:1	420	2,1	40	• Soltanto pilotaggio singolo • Per utilizzo con D02B2-2.1N
PP04SP	3:1	420	2,1	135	• Soltanto pilotaggio singolo • Per utilizzo con D04B2-2.1N

Pilotaggio doppio

Dimensioni millimetri (pollici)

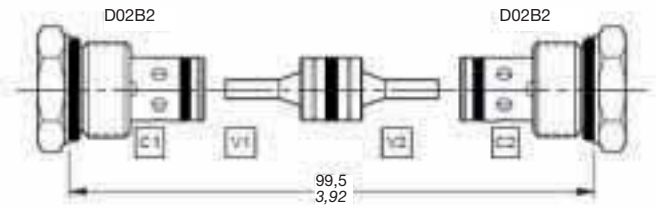

PP02DP

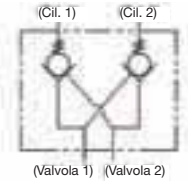

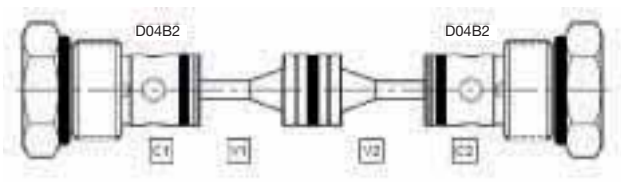

PP04DP

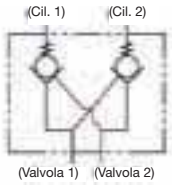

Serie	Rapporto pilota	Pressione massima di ingresso (bar)	Pressione di apertura (bar)	Portata (l/min)	Caratteristiche
PP02DP	4:1	420	2,1	40	• Soltanto pilotaggio doppio • Per utilizzo con 2 pezzi D04B2-2.1N
PP04DP	3:1	420	2,1	135	• Soltanto pilotaggio doppio • Per utilizzo con 2 pezzi D04B2-2.1N

Parker Hannifin Corporation
Hydraulic Cartridge Systems Europe
Crewkerne, UK

Tipo a sfera

Dimensioni millimetri (pollici)

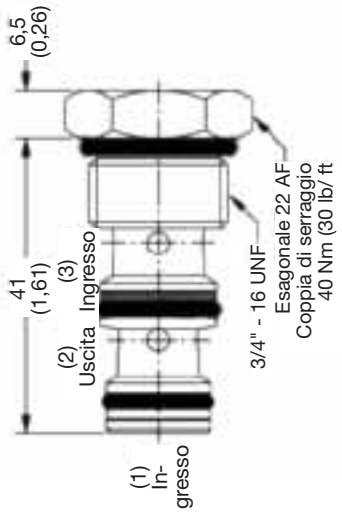

K02A3N

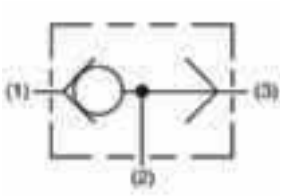

Serie	Corpo	Pressione massima di ingresso (bar)	Portata (l/min)	Caratteristiche
K02A3N	B08-3-6B	420	27	• Struttura del tipo a sfera • Resistente alle contaminazioni

Tipo a cursore

Dimensioni millimetri (pollici)

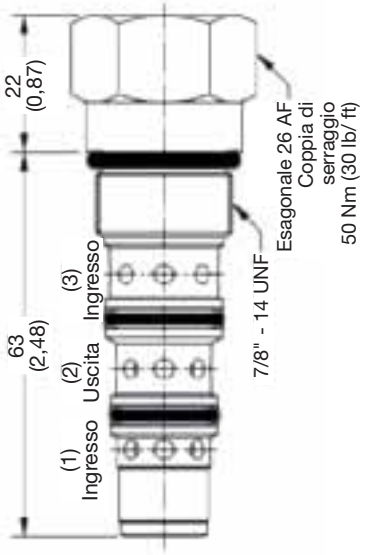

K04C3-5.0N

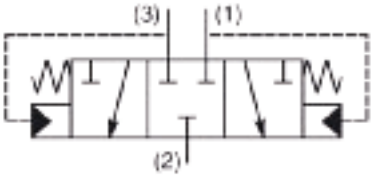

Serie	Corpo	Pressione massima di ingresso (bar)	Portata (l/min)	Caratteristiche
K04C3-5.0N	B10-4-8B	420	55	• Portata elevata • Idonea come valvola di drenaggio in applicazioni di trasmissione.

Tipo bilanciato

Dimensioni millimetri (pollici)

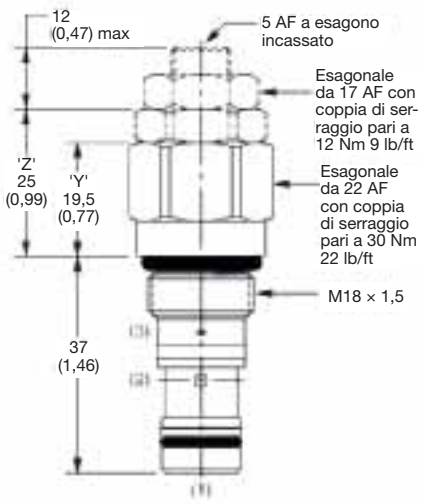

E2B020ZN

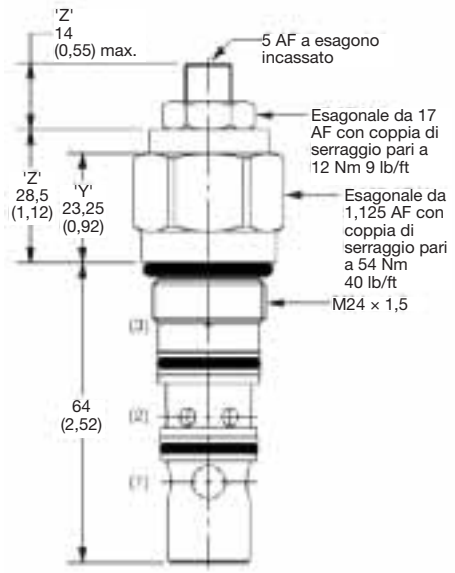

E2B040ZNMK3

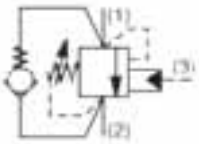

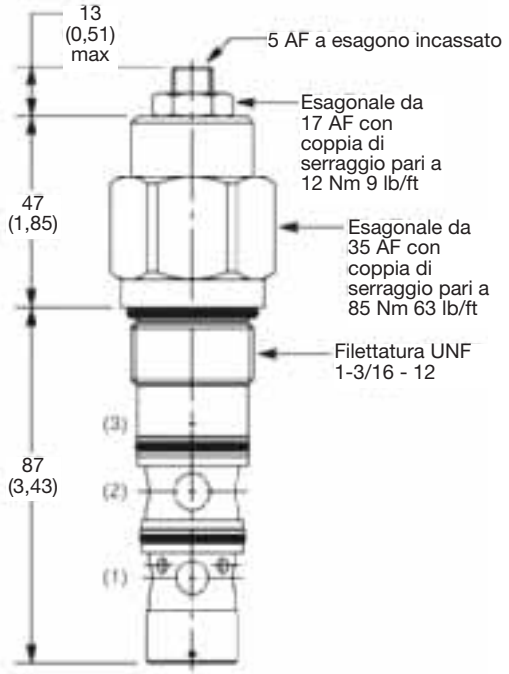

E2B060ZNMK2

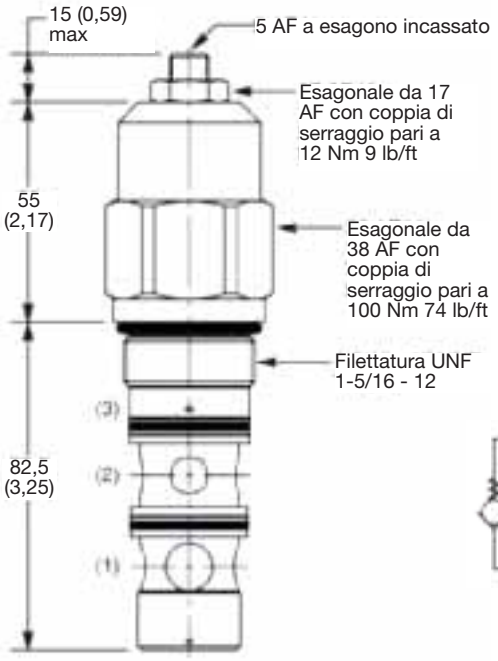

E2E125ZNMK2

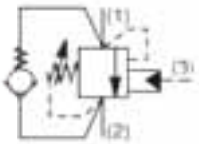

Serie	Corpo	Pressione massima di ingresso (bar)	Taratura standard (bar)	Portata (l/min)	Rapporto pilota	Caratteristiche
E2B020ZN	LB10310S	420	215	20	4,5:1	• Struttura compatta • Controllo e stabilità eccellenti • Gamma di rapporti pilota
E2B040ZNMK3	LB10251S	350	215	60	3:1	
E2B060ZNMK2	LB10039S	350	215	120	3:1	
E2E125ZNMK2	LB10076S	350	215	200	3:1	

Tipo bilanciato

Dimensioni millimetri (pollici)

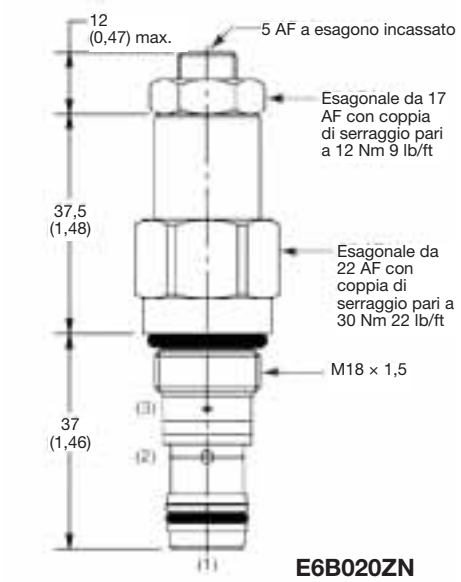

E6B020ZN

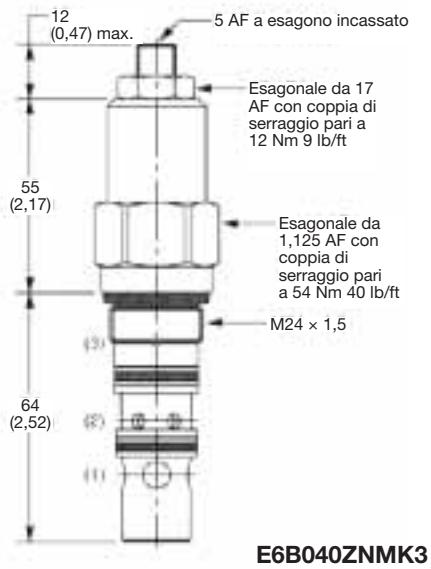

E6B040ZNMK3

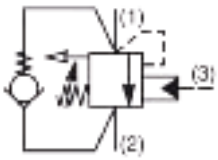

Serie	Corpo	Pressione massima di ingresso (bar)	Taratura standard (bar)	Portata (l/min)	Rapporto pilota	Caratteristiche
E6B020ZN	LB10310S	420	215	20	4,5:1	• Indipendente dalla pressione a valle. • Non richiede linea di scarico separata. • Struttura compatta
E6B040ZNMK3	LB10251S	350	215	60	3:1	

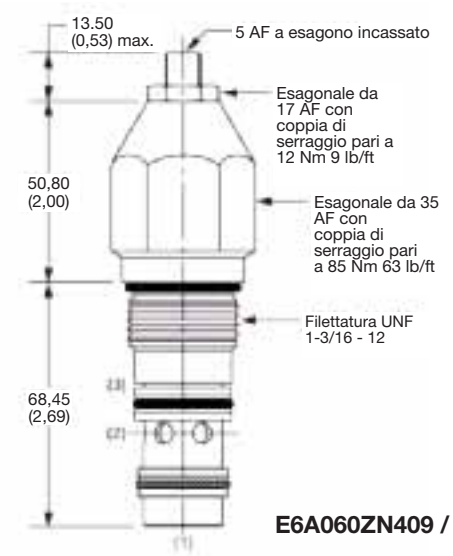

E6A060ZN409 / E6B060ZN409

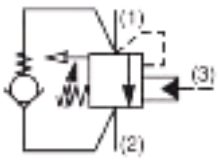

Serie	Corpo	Pressione massima di ingresso (bar)	Taratura standard (bar)	Portata (l/min)	Rapporto pilota	Caratteristiche
E6A060ZN409	LB10039S	350	215	180	8:1	• Indipendente dalla pressione a valle. • Non richiede linea di scarico separata. • Progettate per portate elevate
E6B060ZN409	LB10039S	350	215	180	3:1	

Tipo bilanciato

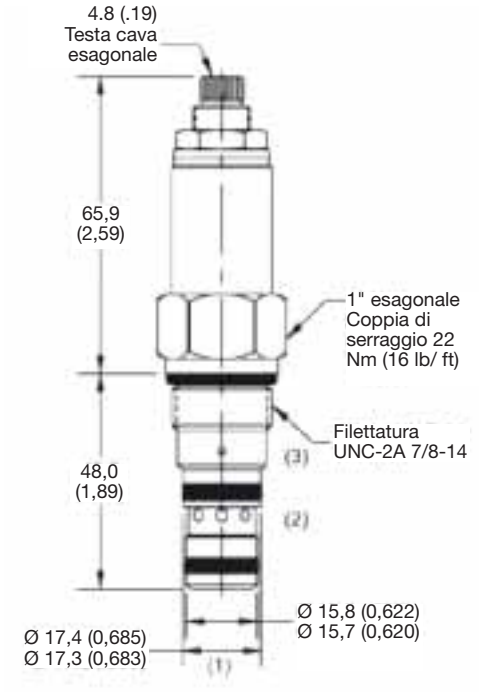

CB101AS30

Dimensioni millimetri (pollici)

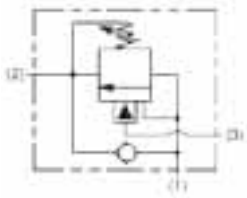

Serie	Corpo	Pressione massima di ingresso (bar)	Taratura standard (bar)	Portata (l/min)	Rapporto pilota	Caratteristiche
CB101AS30	B10-3-8B	380	210	45	3:1	• Rapporto pilota 3:1 • Adatta a cavità standard

Parker Hannifin Corporation
Hydraulic Cartridge Systems Europe
Crewkerne, UK

Valvola a spillo

Dimensioni millimetri (pollici)

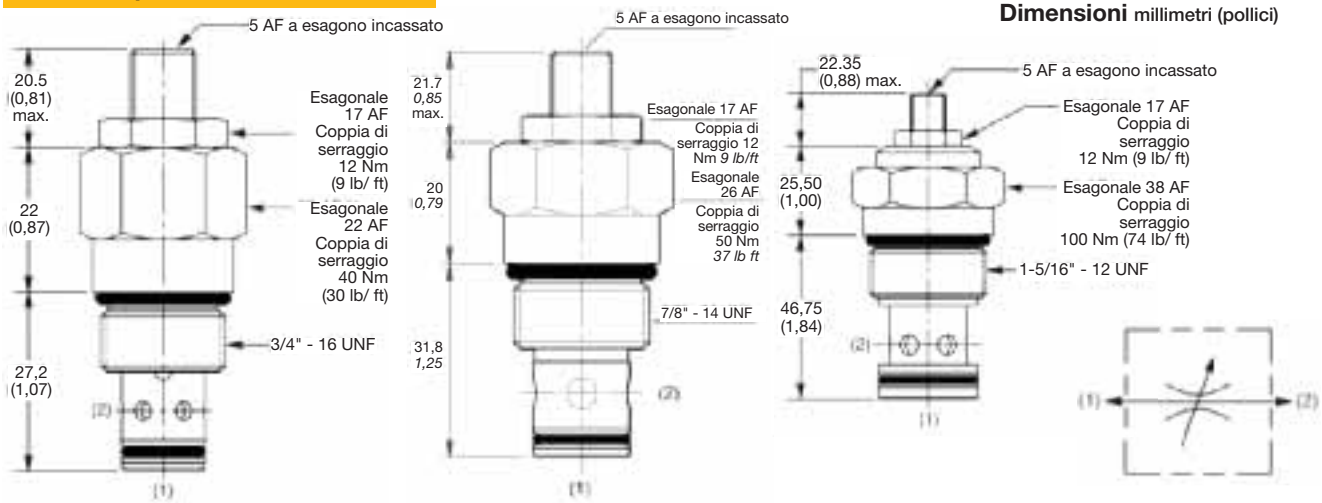

J02A2ZN **J04A2ZN** **J06A2ZN**

Serie	Corpo	Pressione massima di ingresso (bar)	Portata (l/min)	Caratteristiche
J02A2ZN	B08-2-6B	420	45	• Portata elevata da valvola / cavità di dimensioni ridotte. • Regolazione sensibile • Scarso trafilamento all'arresto
J04A2ZN	B10-2-8B	420	110	
J06A2ZN	B16-2-16B	420	225	

Tipo con compensazione di pressione

Dimensioni millimetri (pollici)

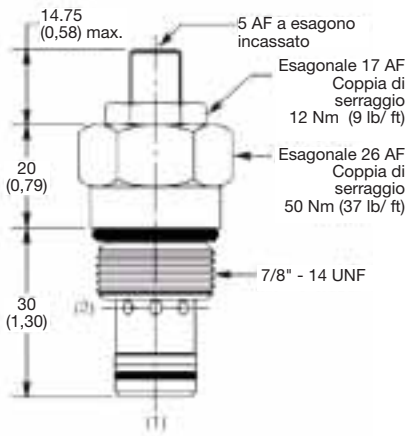

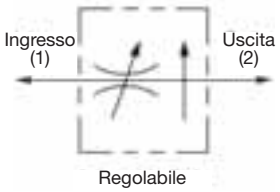

J04C2ZN

Serie	Corpo	Pressione massima di ingresso (bar)	Portata (l/min)	Caratteristiche
J04C2ZN	B10-2-8B	420	40	• Flusso inverso strozzato • Minima modifica della portata alla variazione di pressione.

Tipo con compensazione di pressione

Dimensioni millimetri (pollici)

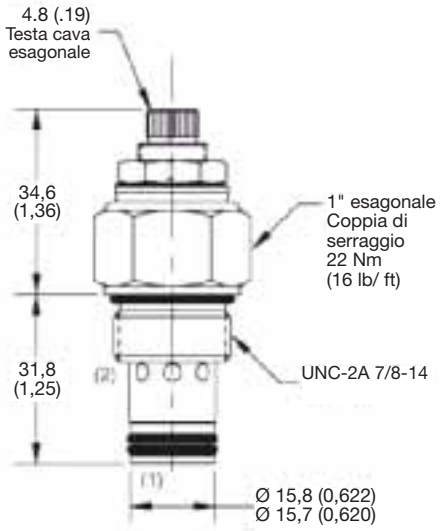

FA101S

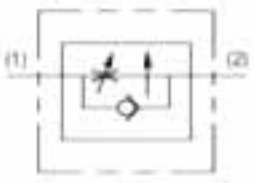

Serie	Corpo	Pressione massima di ingresso (bar)	Portata (l/min)	Caratteristiche
FA101S	B10-2-8B	210	20,6	• Flusso libero inverso

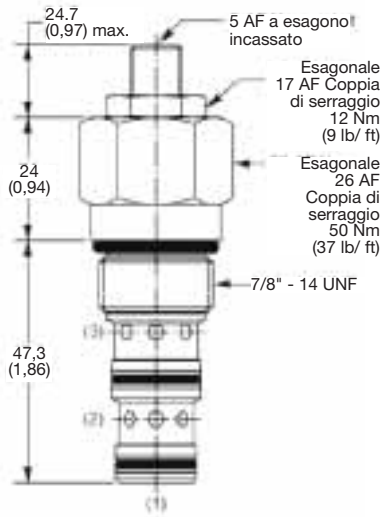

J04D3ZN

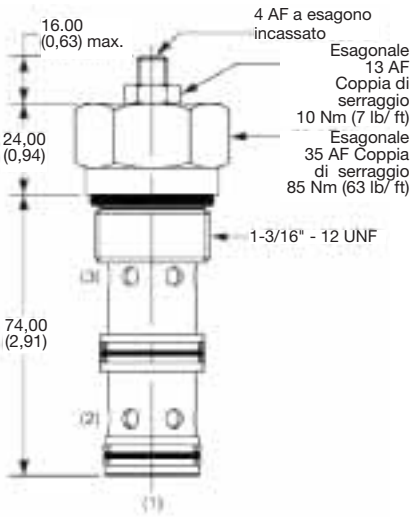

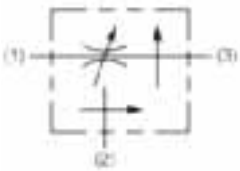

J1A125ZN

Serie	Corpo	Pressione massima di ingresso (bar)	Max. portata in ingresso (l/min)	Portata prioritaria (l/min)	Caratteristiche
J04D3ZN	B10-2-8B	420	90	45	• Valvola di regolazione della portata a 3 vie • Funzioni di flusso prioritario • Ideale per impianti di sterzatura. • Compensazione completa.
J1A125ZN	LB10056S	350	150	90	

Valvola a spillo con dispositivo di non ritorno del flusso inverso

Dimensioni millimetri (pollici)

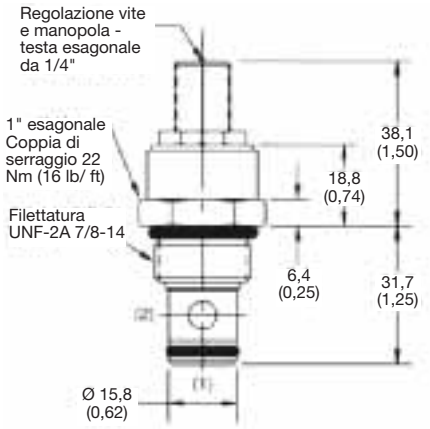

FV101S

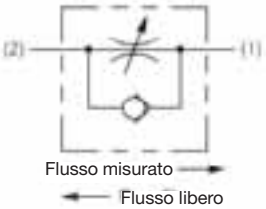

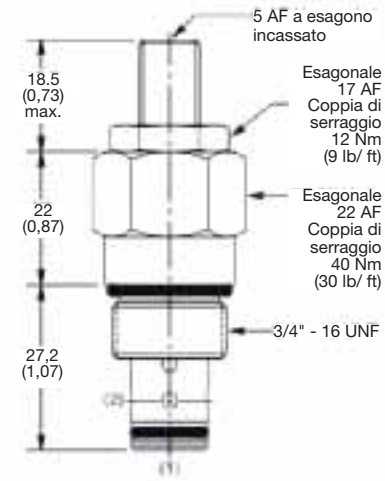

J02B2ZN

Serie	Corpo	Pressione massima di ingresso (bar)	Portata (l/min)	Caratteristiche
FV101S	B10-2-8B	210	45	• Portata elevata • Flusso libero inverso • Flusso misurato da porta 2 a porta 1.
J02B2ZN	B08-2-6B	420	30	• Regolazione sensibile • Scarso trafilamento in chiusura • Flusso libero inverso • Flusso misurato dalla porta 1 alla porta 2.

Tipo con compensazione di pressione

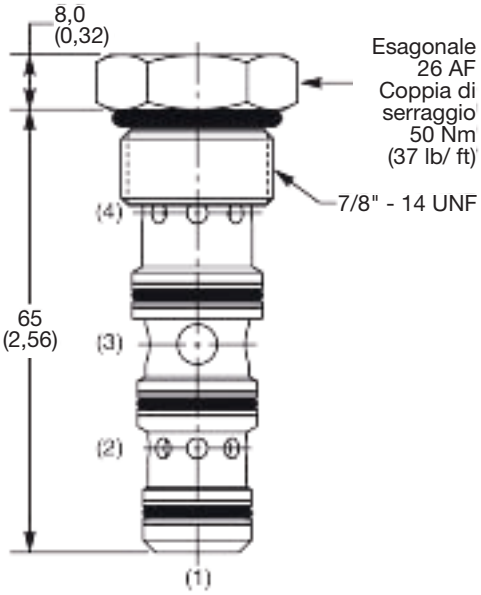

L04A3-30-30N

Dimensioni millimetri (pollici)

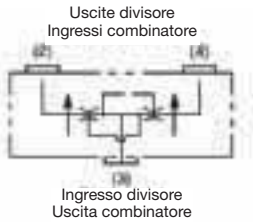

Serie	Corpo	Pressione massima di ingresso (bar)	Portata (l/min)	Portata	Caratteristiche
L04A3-30-30N	B10-4-8B	420	14-60	50:50	• Portata con compensazione di pressione sia in modalità divisione sia in modalità combinazione.

Parker Hannifin Corporation
Hydraulic Cartridge Systems Europe
Crewkerne, UK

Ad azione diretta

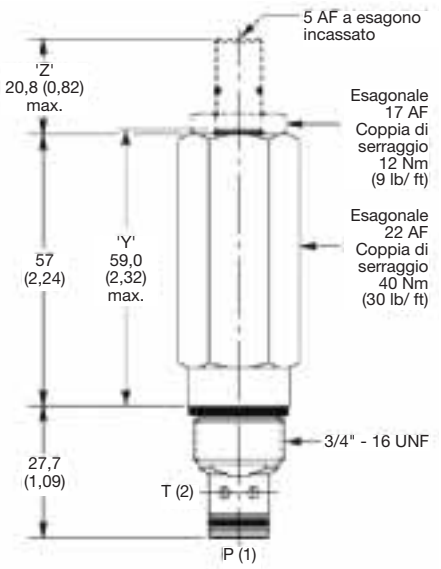

A02B2PZN

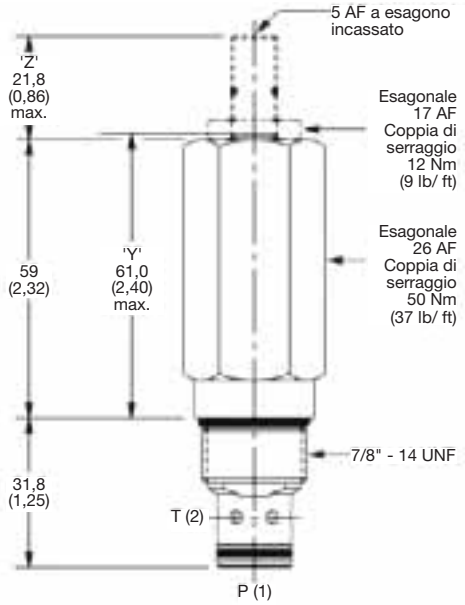

A04B2PZN

Dimensioni millimetri (pollici)

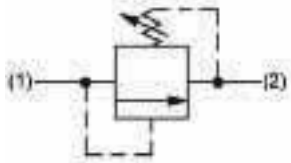

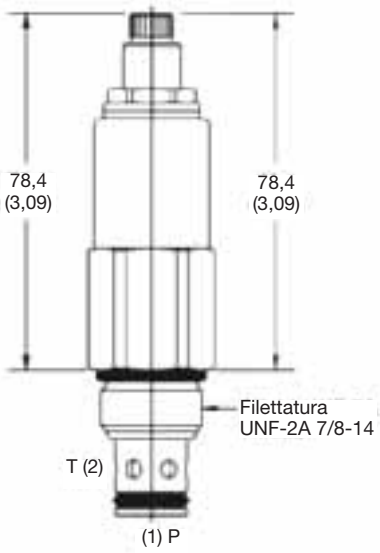

RD102S30

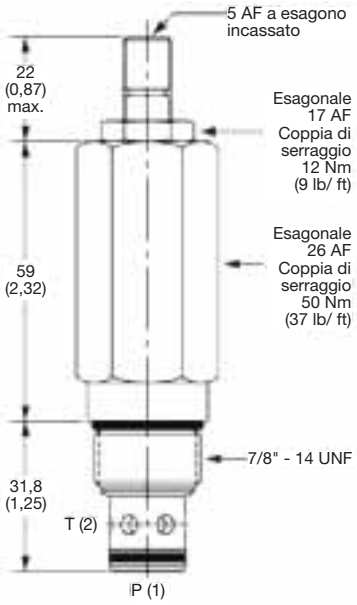

A04C2FZN

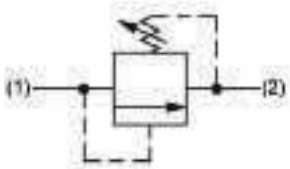

Serie	Corpo	Pressione massima di ingresso (bar)	Taratura standard (bar)	Portata (l/min)	Range di Pressione (bar)	Caratteristiche
A02B2PZN	B08-2-6B	420	200	30	5-420	• Risposta rapida • Stabile per tutto il range di portata. • Praticamente esente da trafilamenti • Valvola di massima pressione versatile
A04B2PZN	B10-2-8B	420	200	100	5-420	
RD102S30	B10-2-8B	250	103,4	38	41-207	
A04C2FZN	B10-2-8B	420	50	200	2-100	• Tipo a cursore • Portata elevata • Taratura a bassa pressione

Area differenziale

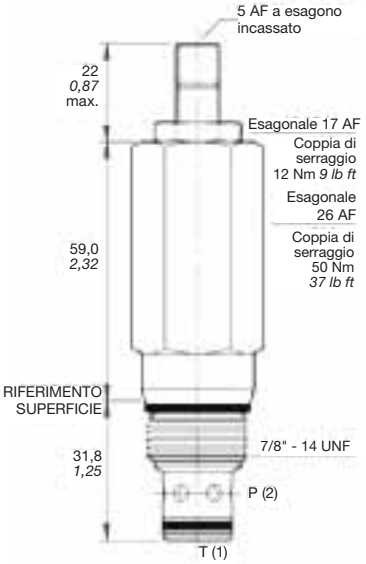

A04D2MZN

Dimensioni millimetri (pollici)

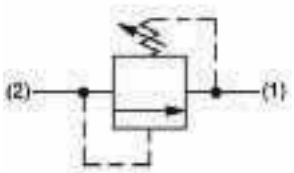

Serie	Corpo	Pressione massima di ingresso (bar)	Taratura standard (bar)	Portata (l/min)	Range di regolazione (bar)	Caratteristiche
A04D2MZN	B10-2-8B	350	200	150	2-350	• Reazione rapida • Praticamente esente da trafilamenti • Risposta costante

Pilota

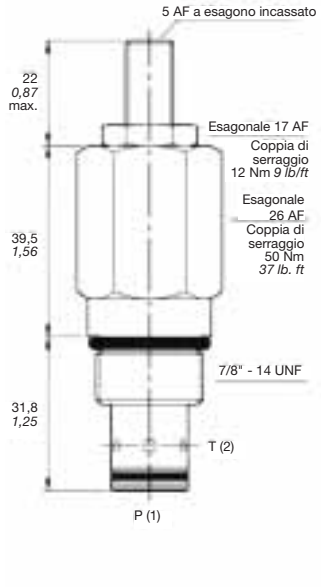

A04G2PZN

Dimensioni millimetri (pollici)

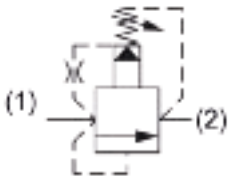

Serie	Corpo	Pressione massima di ingresso (bar)	Taratura standard (bar)	Portata (l/min)	Range di regolazione (bar)	Caratteristiche
A04G2PZN	B10-2-8B	420	200	200	10-420	• Portata elevata • Contropressione di linea serbatoio pieno.

Pilota

Dimensioni millimetri (pollici)

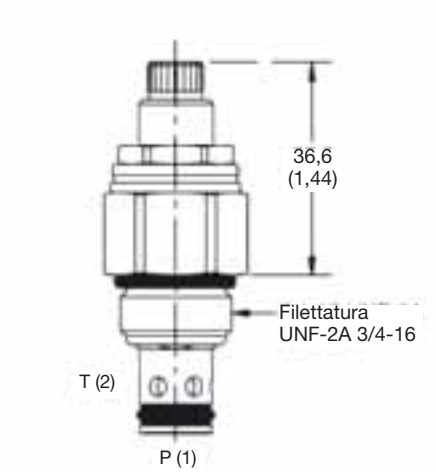

RAH081S50

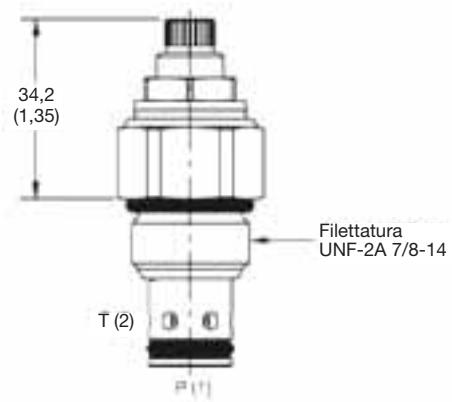

RAH101S50

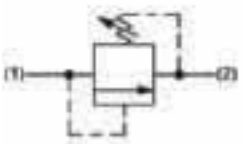

Serie	Corpo	Pressione massima di ingresso (bar)	Taratura standard (bar)	Portata (l/min)	Range di regolazione (bar)	Caratteristiche
RAH081S50	B08-2-6B	380	172,4	75	13,8 - 345	• Design compatto • Ripetibilità di posizionamento • Schermatura interna a protezione della sede pilota.
RAH101S50	B10-2-8B	380	172,4	113	13,8 - 345	

Valvola di massima pressione con pilotaggio

Dimensioni millimetri (pollici)

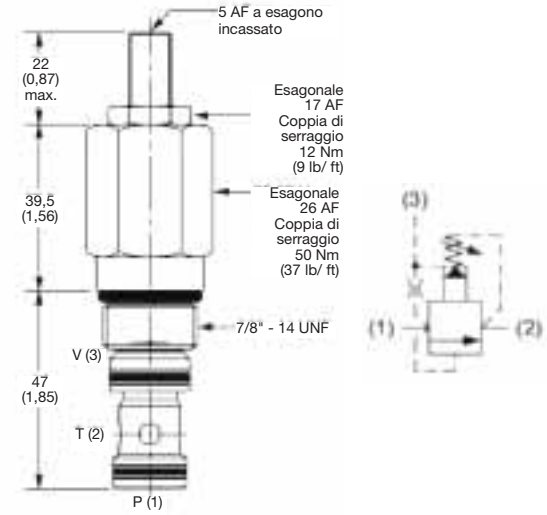

A04H3PZN

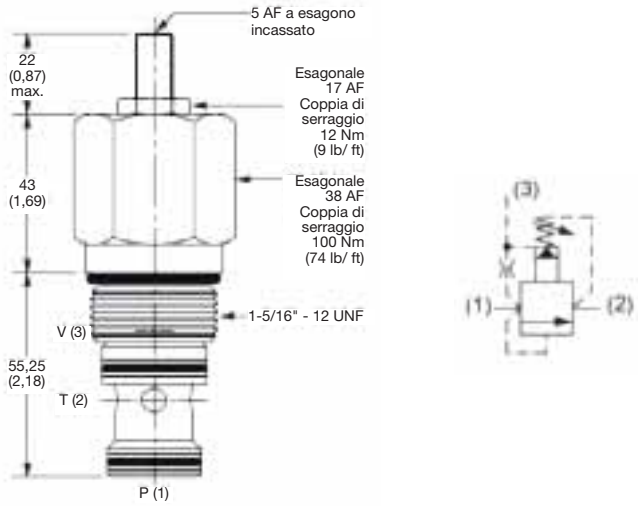

A06H3PZN

Serie	Corpo	Pressione massima di ingresso (bar)	Taratura standard (bar)	Portata (l/min)	Range di regolazione (bar)	Caratteristiche
A04H3PZN	B10-3S-8B	420	200	190	10 - 420	• Portata elevata • Contropressione di linea serbatoio pieno. • Ideale per sistemi di massima pressione e scarico pompa mediante linea di pilotaggio.
A06H3PZN	B16-3S-16B	420	200	400	10 - 420	

Tipo incrociato

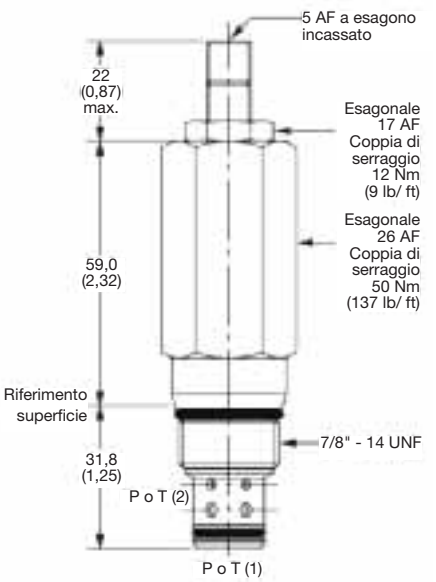

Dimensioni millimetri (pollici)

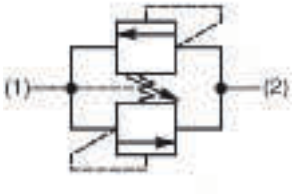

A04J2MZN

Serie	Corpo	Pressione massima di ingresso (bar)	Taratura standard (bar)	Range di tara-tura (bar)	Portata (l/min)	Caratteristiche
A04J2MZN	B10-2-8B	420	200	10-350	120	• Portata elevata • Apertura in entrambe le direzioni • Economica, con singola regolazione.

Valvola di scarico

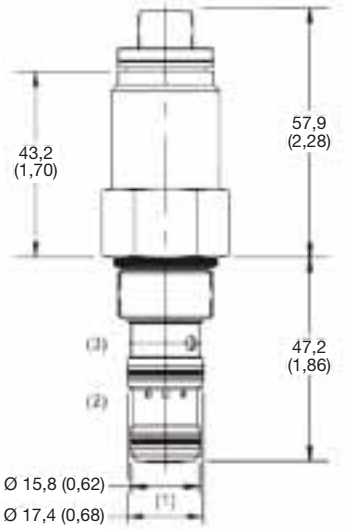

Dimensioni millimetri (pollici)

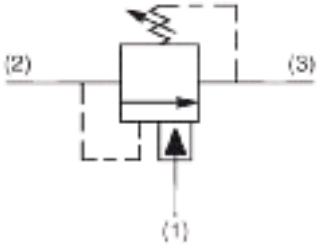

RU101S30C

Serie	Corpo	Pressione massima di ingresso (bar)	Pressione standard Taratura (bar)	Portata (l/min)	Range di Taratura (bar)	Caratteristiche
RU101S30C	B10-3-8B	245	103,5	3,75	14-207	• Adatta per i circuiti di scarico degli accumulatori. • Fornisce una percentuale fissa tra le pressioni di carico e di scarico.

Pilota

Dimensioni millimetri (pollici)

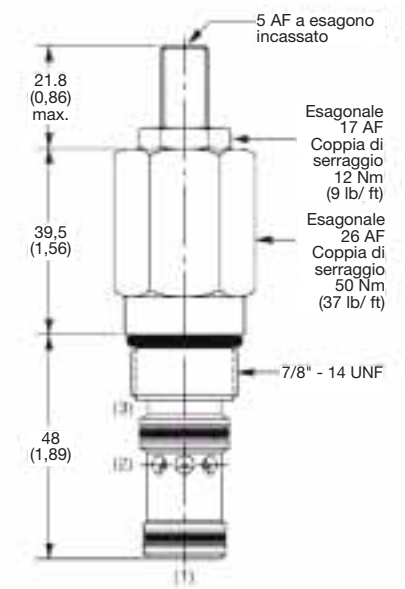

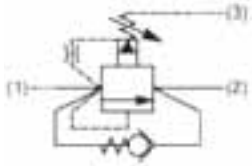

B04D3PZN

Serie	Corpo	Pressione massima di ingresso (bar)	Taratura standard (bar)	Portata (l/min)	Range di regolazione (bar)	Caratteristiche
B04D3PZN	B10-3S-8B	420	200	70	da 10 a 420	• Portata elevata

Ad azione diretta

Dimensioni millimetri (pollici)

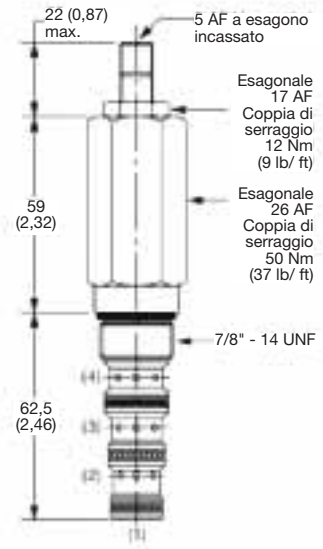

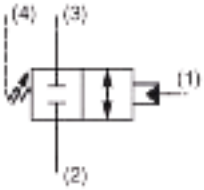

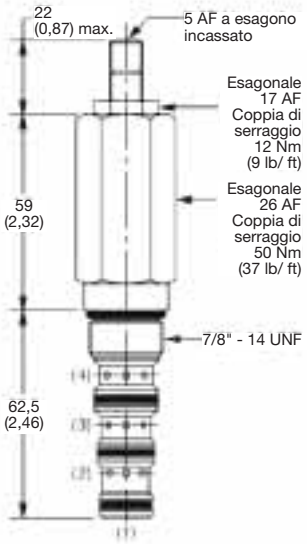

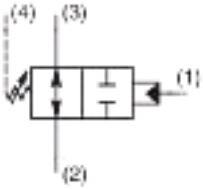

B04H4GZN **B04J4GZN**

Serie	Corpo	Pressione massima di ingresso (bar)	Taratura standard (bar)	Portata (l/min)	Range di regolazione (bar)	Caratteristiche
B04H4GZN	B10-4-8B	420	80	47	da 2 a 166	• Pilota e drenaggio esterno
B04J4GZN	B10-4-8B	420	80	47	da 2 a 166	

Ad azione diretta

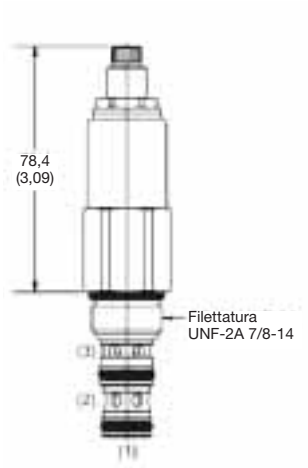

PR103S

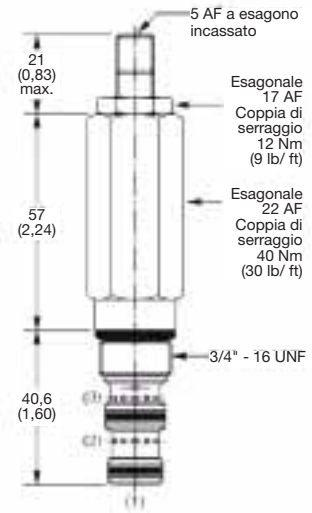

Dimensioni millimetri (pollici)

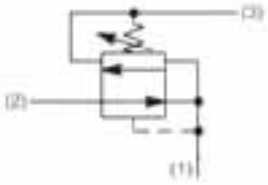

C02A3CZN / C02A3GZN

Serie	Corpo	Pressione massima di ingresso (bar)	Portata (l/min)	Range di ri-duzione pres-sione (bar)	Caratteristiche
C02A3CZN	B08-3-6B	420	20	da 5 a 40	• Inversione parziale del flusso
C02A3GZN	B08-3-6B	420	20	da 50 a 150	
PR103S21	B10-3-8B	210	56	da 28 a 124	

Pilota

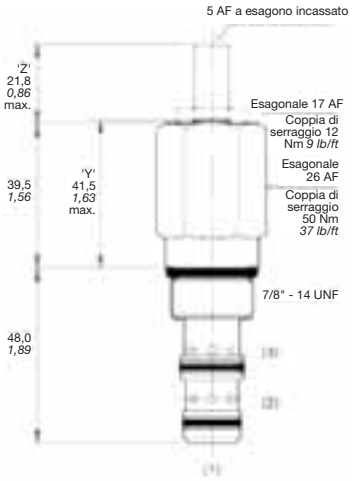

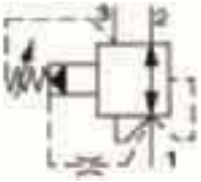

Dimensioni millimetri (pollici)

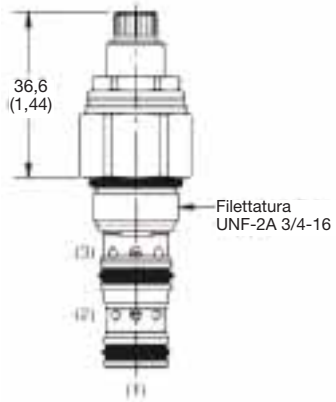

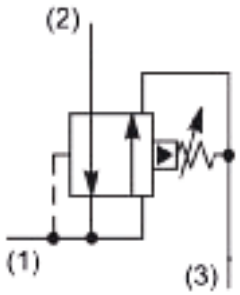

C04B3MZN

PRH081S50

Serie	Corpo	Pressione massima di ingresso (bar)	Taratura standard (bar)	Portata (l/min)	Range di ri-duzione pres-sione (bar)	Caratteristiche
C04B3MZN	B10-3-8B	420	100	120	da 10 a 210	• Protezione pilota con schermatura interna. (soltanto PRH) • Portata/incremento di pressione ridotti.
PRH081S50	B08-3-6B	380	172,4	30	da 14 a 345	

Tipo a fungo

Dimensioni millimetri (pollici)

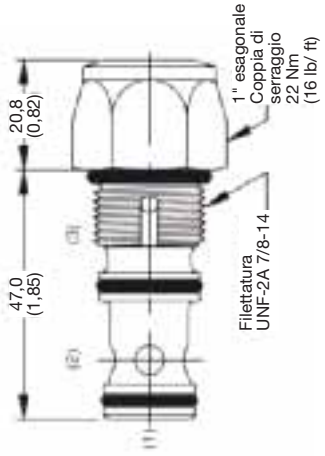

10SLC1-A-150

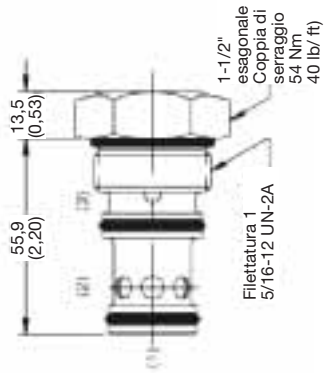

16SLC1-A-50

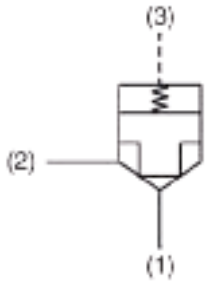

Serie	Corpo	Pressione massima di ingresso (bar)	Molla diagonale (bar)	Portata (l/min)	Caratteristiche
10SLC1-A-150	B10-3S-8B	240	10,3	57	• Funzione tipica: commutazione direzionale di portate elevate.
16SLC1-A-50	B16-3S-16B	240	3,5	189	

Tipo a cursore

Dimensioni millimetri (pollici)

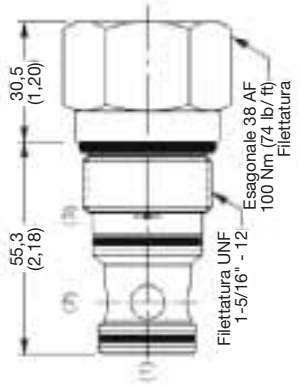

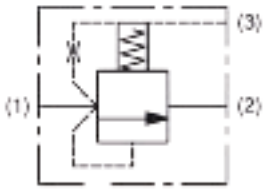

R06G3-5.5N
Normalmente chiusa

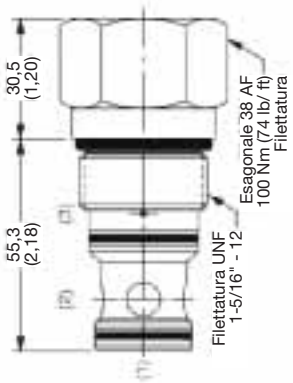

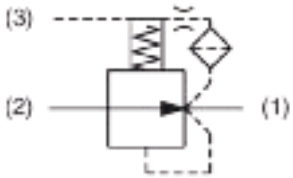

R06G3-5.5N
Normalmente aperta

Serie	Corpo	Pressione massima di ingresso (bar)	Pressione di commutazione (bar)	Portata (l/min)	Caratteristiche
R06G3-5.5N	B16-3S-16B	420	5,5	270	• Funzione tipica: regolazione di portata o pressione.
R06G3-5.5N	B16-3S-16B	420	5,5	90	

Parker Hannifin Corporation
Hydraulic Cartridge Systems Europe
Crewkerne, UK

Tipo deviatore

Dimensioni millimetri (pollici)

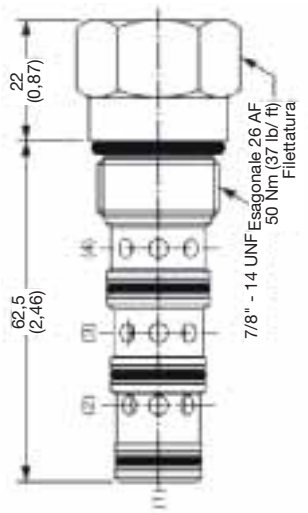

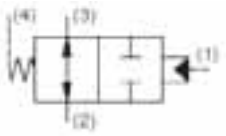

R04B4-5.0NS

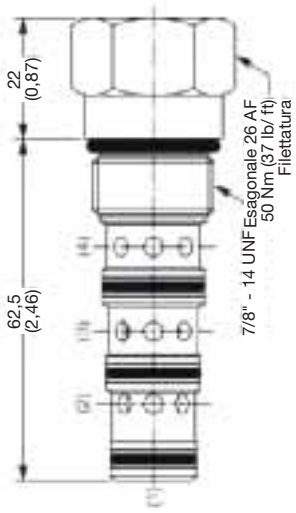

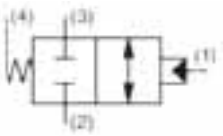

R04B4-5.0NS

Serie	Corpo	Pressione massima di ingresso (bar)	Pressione di commutazione (bar)	Portata (l/min)	Caratteristiche
R04B4-5.0NS	B10-4-8B	420	5	47	• Range di pressioni di commutazione • Pilota stagna
R04B4-5.0NS	B10-4-8B	420	5	47	

Pilota

Dimensioni millimetri (pollici)

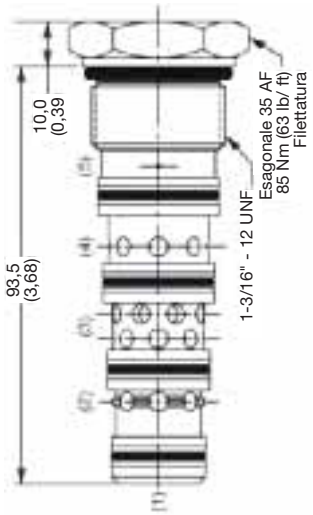

N5A125-6.9N

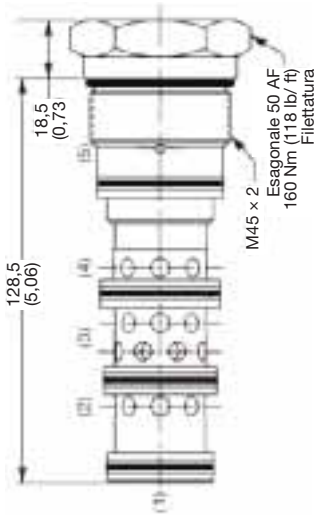

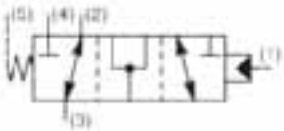

N5A300-6.9N

Serie	Corpo	Pressione massima di ingresso (bar)	Pressione di commutazione (bar)	Portata (l/min)	Caratteristiche
N5A125-6.9N	LB10314S	420	6,9	90	• Range di pressioni di commutazione
N5A300-6.9N	LB10316S	420	6,9	270	

Valvola a fungo bidirezionale a 2 vie

Dimensioni millimetri (pollici)

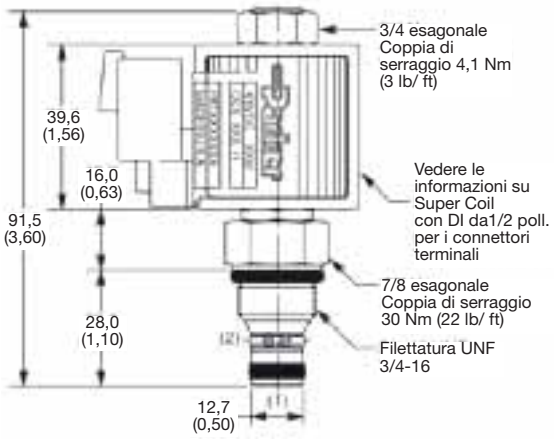

GS028100N

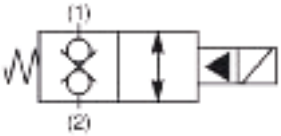

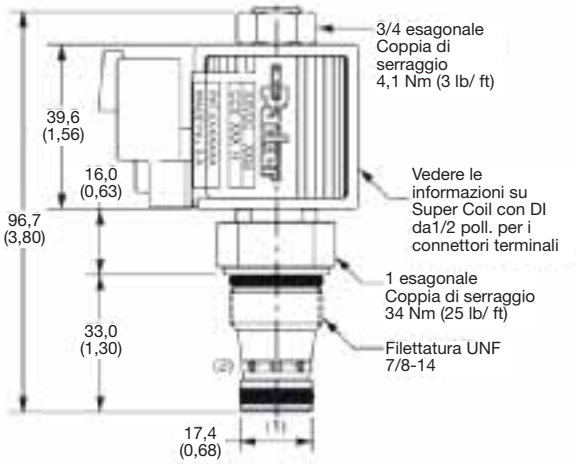

GS048100N

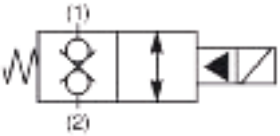

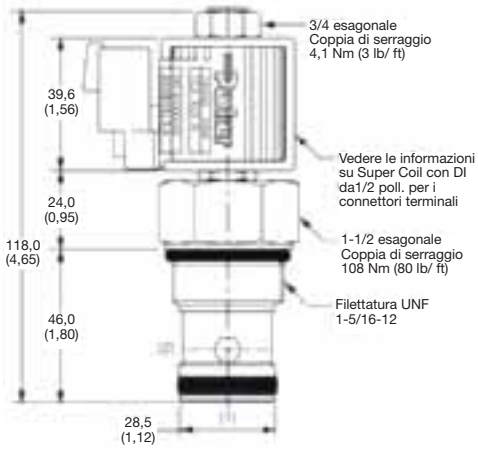

GS068100N

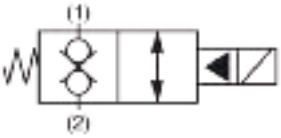

Serie	Corpo	Pressione massima di ingresso (bar)	Tipo di bobina	Portata (l/min)	Caratteristiche
GS028100N	B08-2-6B	350	CC	34	• Normalmente chiusa • Valvola a fungo bidirezionale
GS048100N	LB10545S	350	CC	68	
GS068100N	B16-2-16B	350	CC	190	

Valvola a fungo bidirezionale a 2 vie

Dimensioni millimetri (pollici)

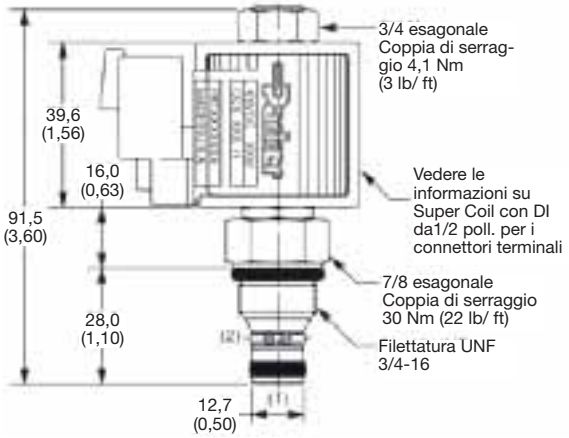

GS028600N

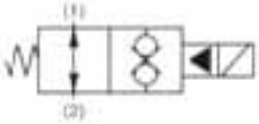

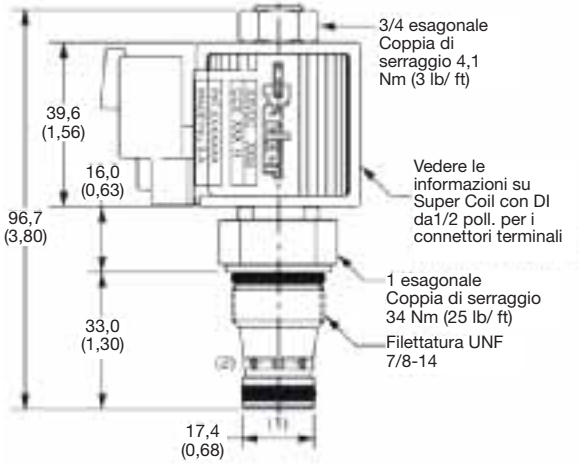

GS048600N

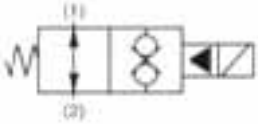

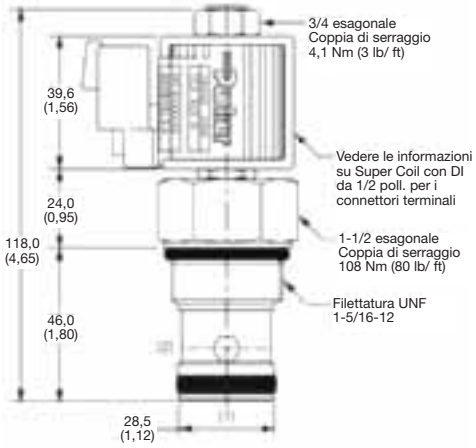

GS068600N

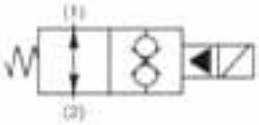

Serie	Corpo	Pressione massima di ingresso (bar)	Tipo di bobina	Portata (l/min)	Caratteristiche
GS028600N	B08-2-6B	350	CC	34	• Normalmente aperta • Valvola a fungo bidirezionale
GS048600N	LB10545S	350	CC	68	
GS068600N	B16-2-16B	350	CC	190	

Elettrovalvole a fungo a 2 vie - normalmente chiuse

Dimensioni millimetri (pollici)

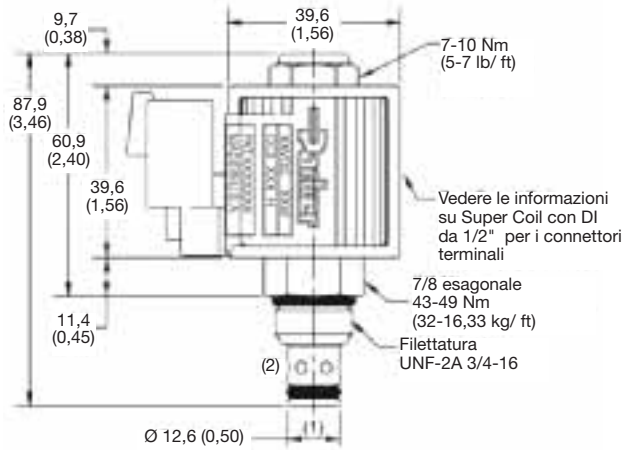

DSH081CR

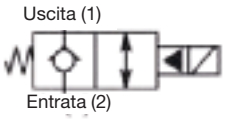

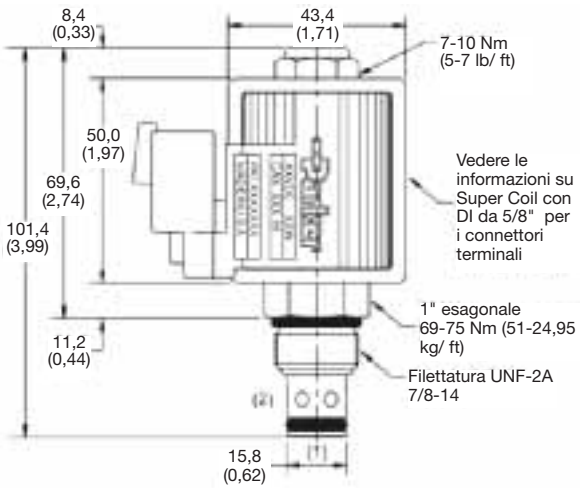

DSH101CR

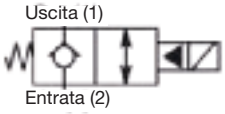

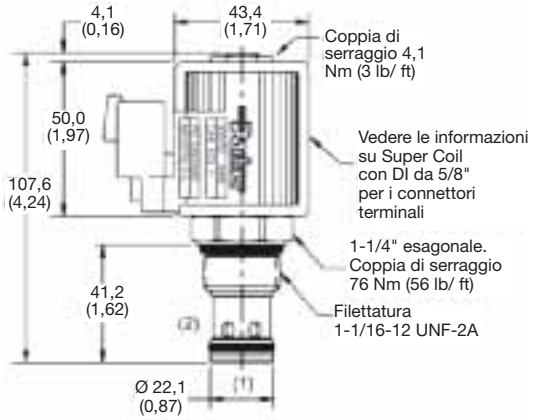

DSH121CR

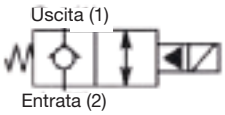

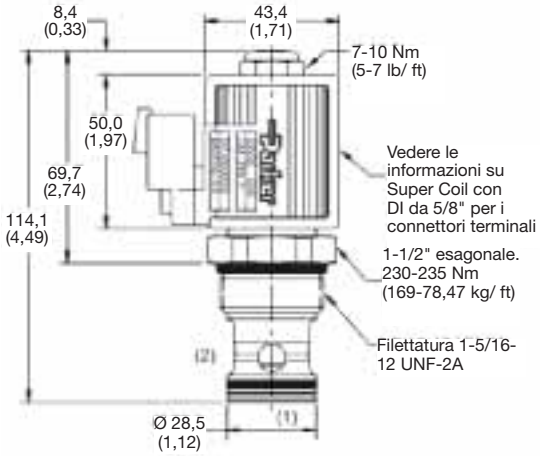

DSH161CR

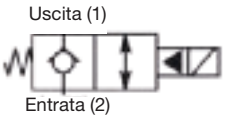

Serie	Corpo	Pressione massima di ingresso (bar)	Tipo bobina	Portata (l/min)	Caratteristiche
DSH081CR	B08-2-6B	350	CC	30	• Flusso libero inverso • Trafilamenti minimi
DSH101CR	B10-2-8B	350	CA	60	
DSH121CR	B12-2-12B	350	CA	90	
DSH161CR	B16-2-16B	210	CA	350	

Elettrovalvole a fungo a 2 vie - normalmente aperte

Dimensioni millimetri (pollici)

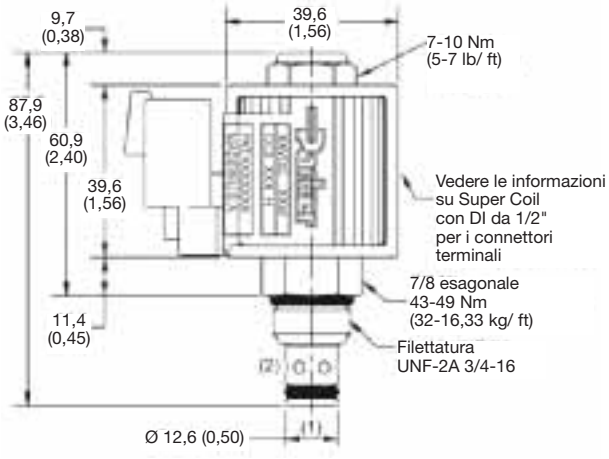

DSH081NR

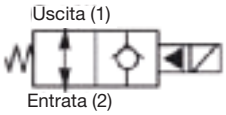

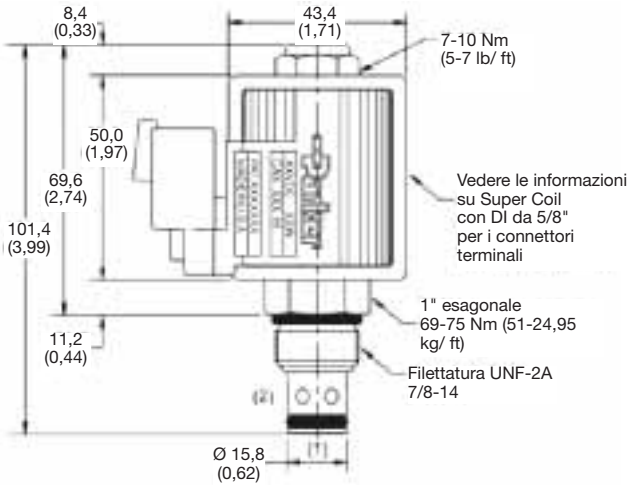

DSH101NR

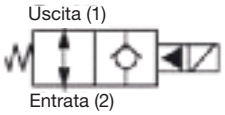

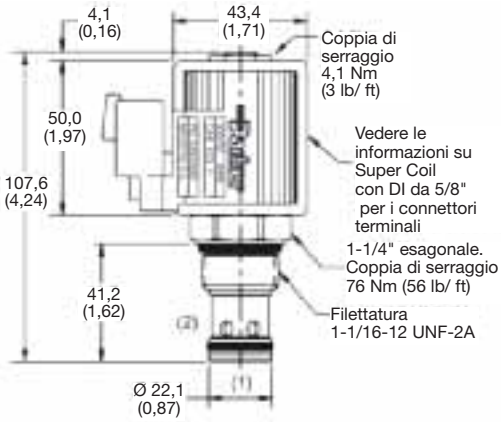

DSH121NR

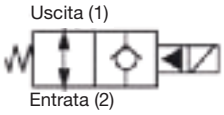

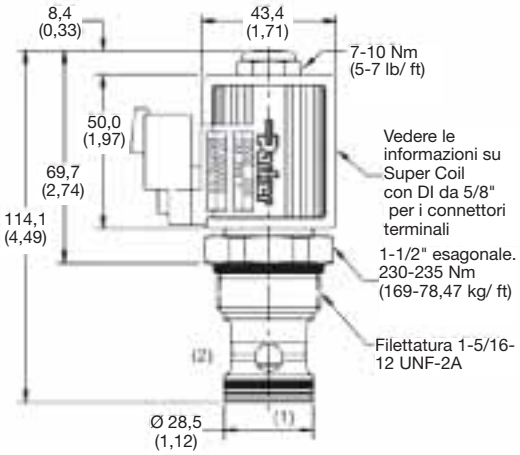

DSH161NR

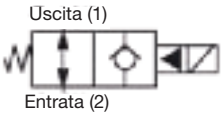

Serie	Corpo	Pressione massima di ingresso (bar)	Tipo bobina	Portata (l/min)	Caratteristiche
DSH081NR	B08-2-6B	350	CC	30	• Trafilamenti minimi • Flusso libero inverso
DSH101NR	B10-2-8B	350	CA	60	
DSH121NR	B12-2-12B	350	CA	90	
DSH161NR	B16-2-16B	210	CA	350	

Elettrovalvole a cursore a 2 vie normalmente chiuse

Dimensioni millimetri (pollici)

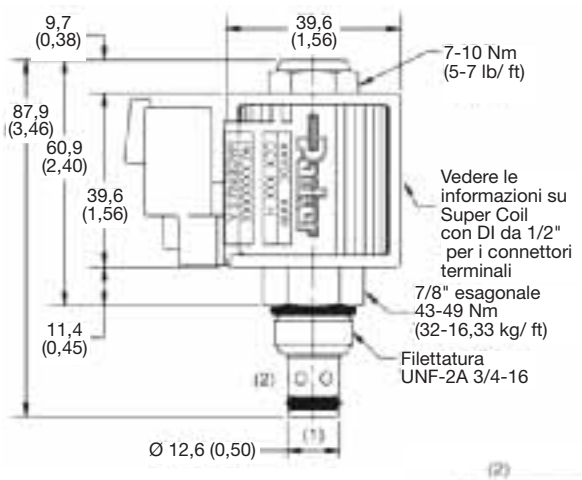

DSH082C

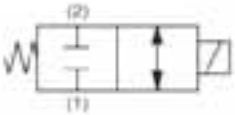

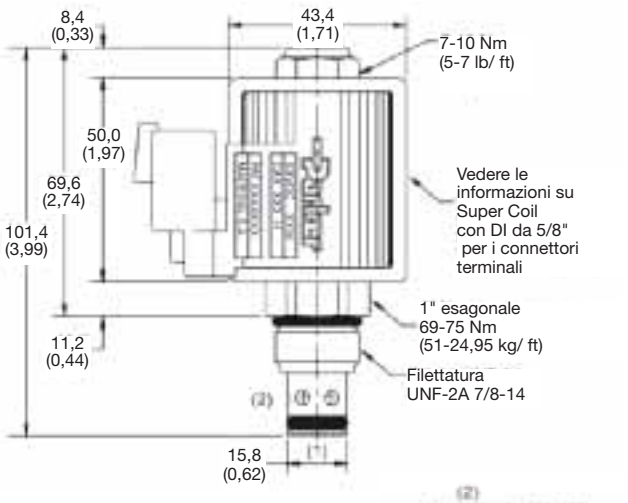

DSH102C

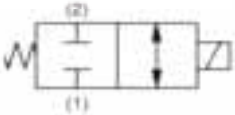

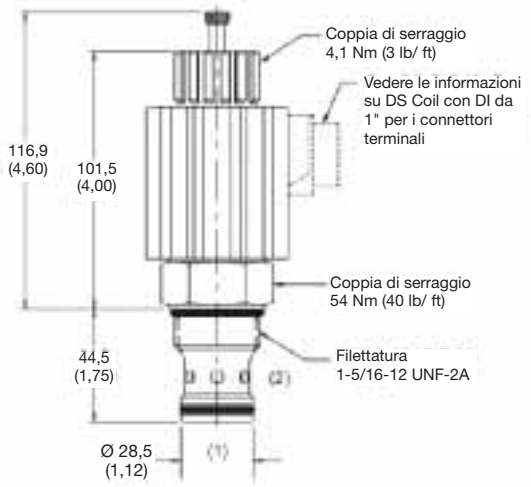

DS162C

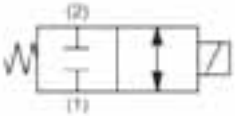

Serie	Corpo	Pressione massima di ingresso (bar)	Tipo bobina	Portata (l/min)	Caratteristiche
DSH082C	B08-2-6B	350	CC	15	• Normalmente chiusa
DSH102C	B10-2-8B	350	CA	30	• Normalmente chiusa
DS162C	B16-2-16B	210	Serie da 1"	75	• Normalmente chiusa

Elettrovalvole a cursore a 2 vie normalmente aperte

Dimensioni millimetri (pollici)

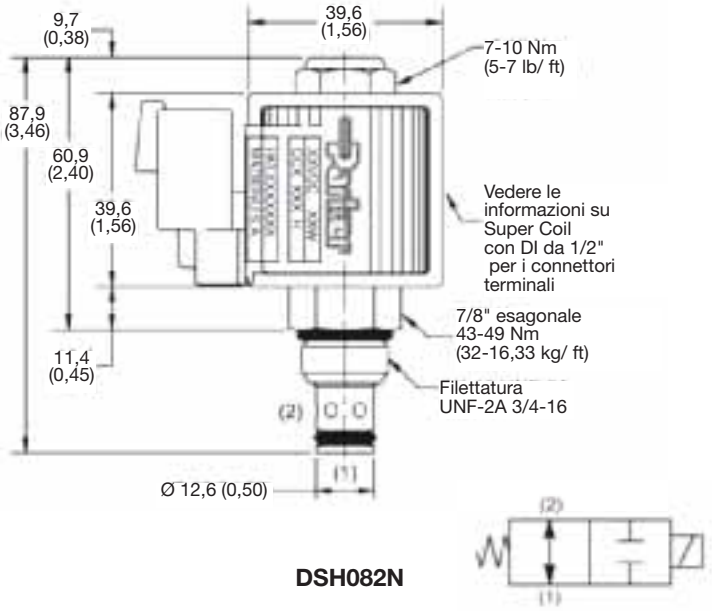

DSH082N

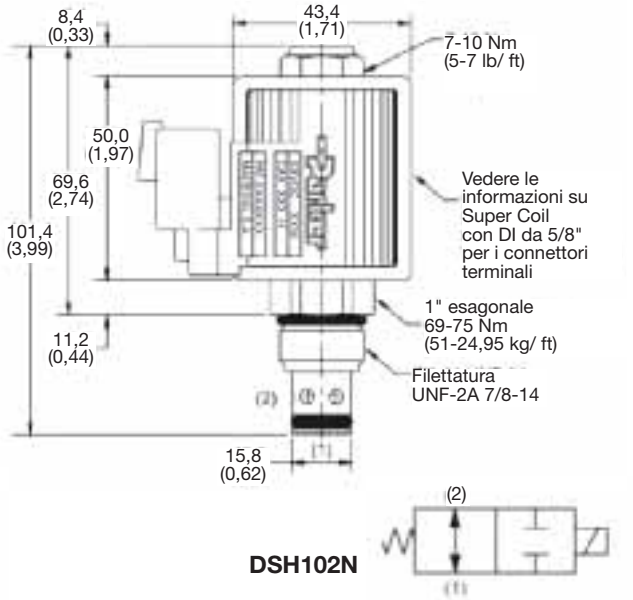

DSH102N

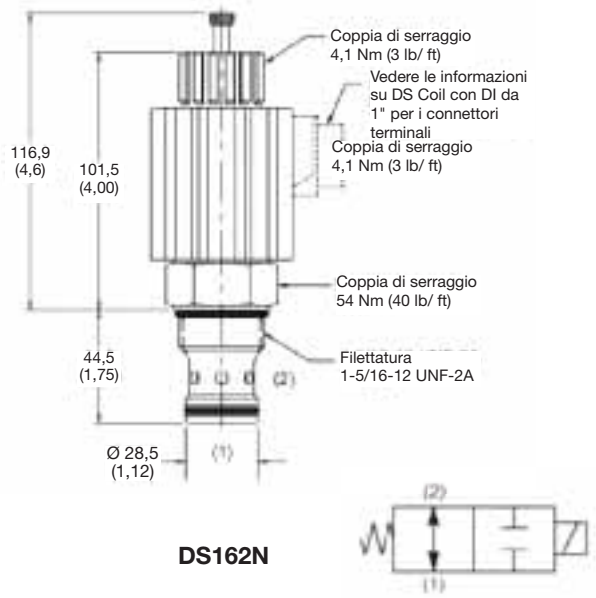

DS162N

Serie	Corpo	Pressione massima di ingresso (bar)	Tipo bobina	Portata (l/min)	Caratteristiche
DSH082N	B08-2-6B	350	CC	8,4	• Normalmente aperta
DSH102N	B10-2-8B	350	CA	19	• Normalmente aperta
DS162N	B16-2-16B	210	Serie da 1"	75	• Normalmente aperta

Parker Hannifin Corporation
Hydraulic Cartridge Systems Europe
Crewkerne, UK

Elettrovalvole a cursore a 3 vie normalmente chiuse

Dimensioni millimetri (pollici)

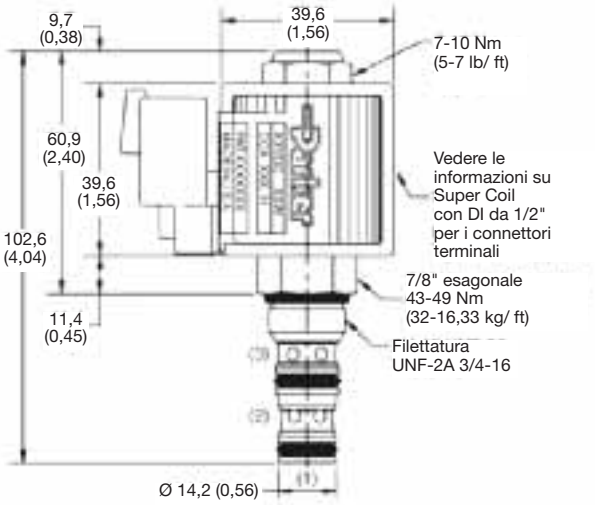

DSH083B

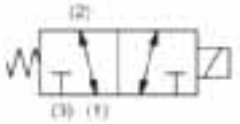

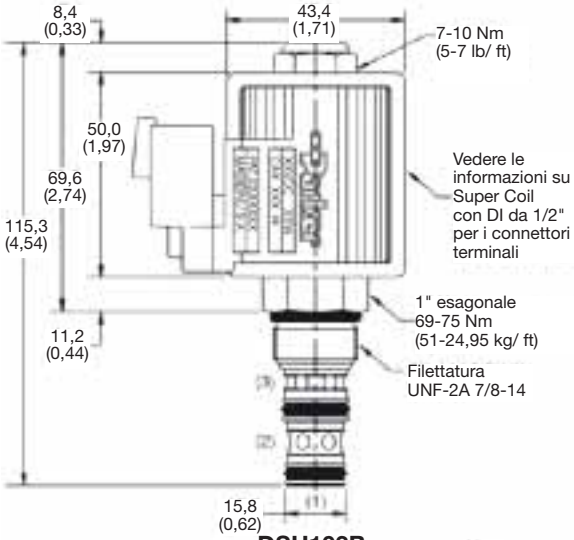

DSH103B

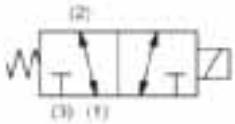

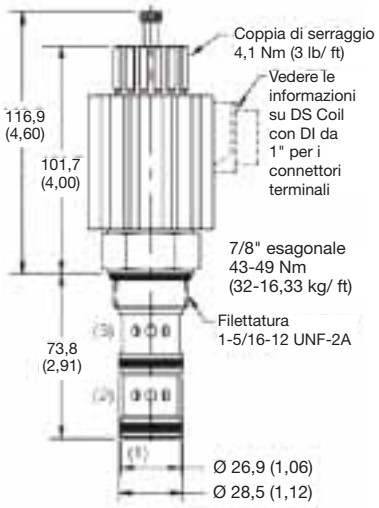

DS163

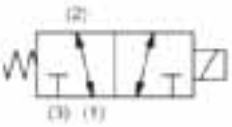

Serie	Corpo	Pressione massima di ingresso (bar)	Tipo bobina	Portata (l/min)	Caratteristiche
DSH083B	B08-3-6B	350	CC	15	• Normalmente chiusa
DSH103B	B10-3-8B	350	CA	30	• Normalmente chiusa
DS163	B16-3-16B	210	Serie da 1"	42	• Normalmente chiusa

Parker Hannifin Corporation
Hydraulic Cartridge Systems Europe
Crewkerne, UK

Elettrovalvole a cursore 2 posizioni e 4 vie - Normalmente chiuse

Dimensioni millimetri (pollici)

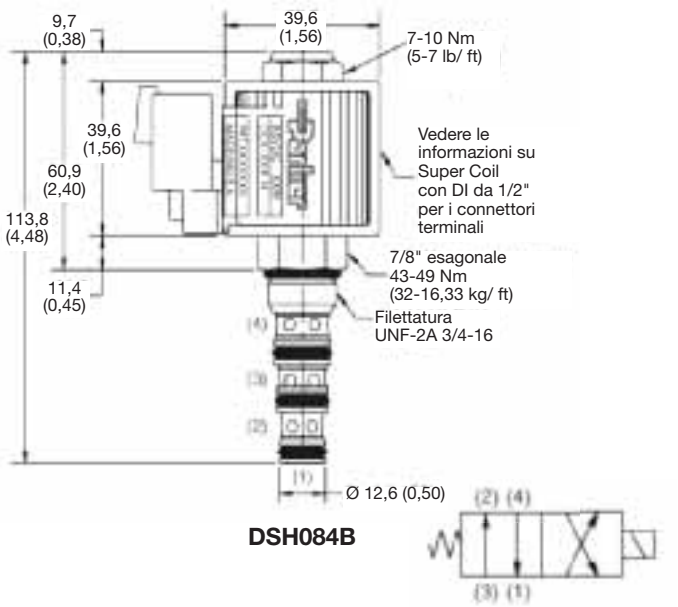

DSH084B

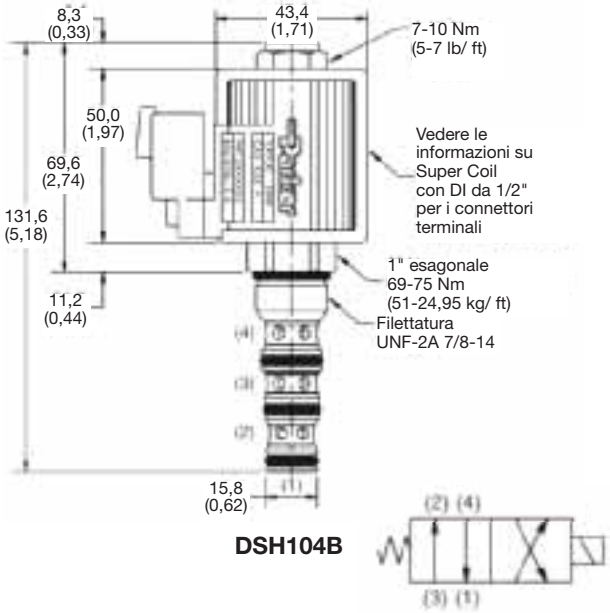

DSH104B

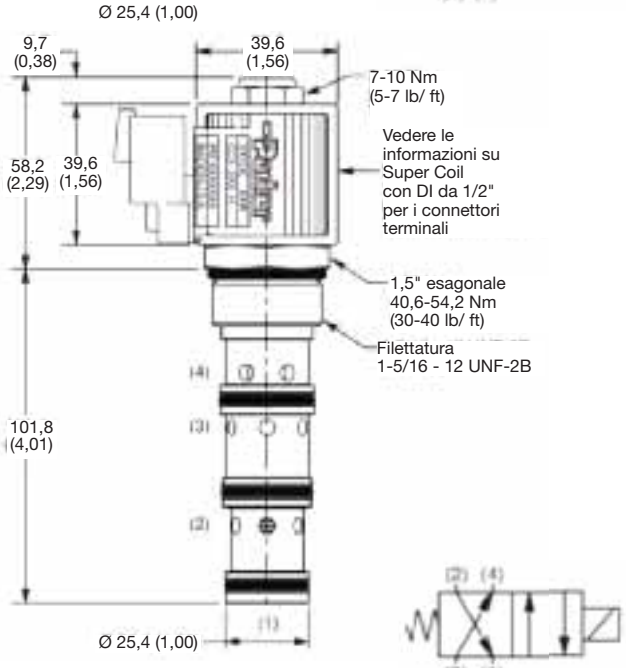

DSH164H

Serie	Corpo	Pressione massima di ingresso (bar)	Tipo bobina	Portata (l/min)	Caratteristiche
DSH084B	B08-4-6B	350	CC	da 11 a 15	• Normalmente chiusa
DSH104B	B10-4-8B	350	CA	da 23 a 38	• Normalmente chiusa
DSH164H	B16-4-16B	350	CC	114	• Normalmente chiusa • Pilota

Elettrovalvole a cursore 3 posizioni

Dimensioni millimetri (pollici)

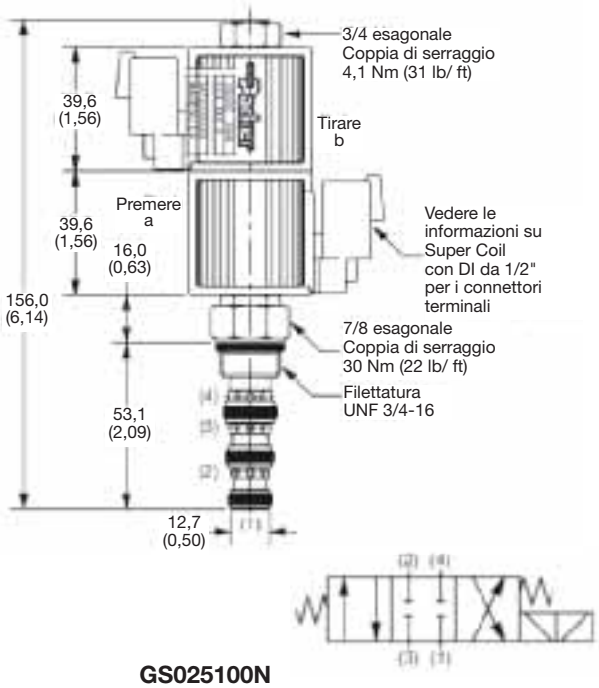

GS025100N

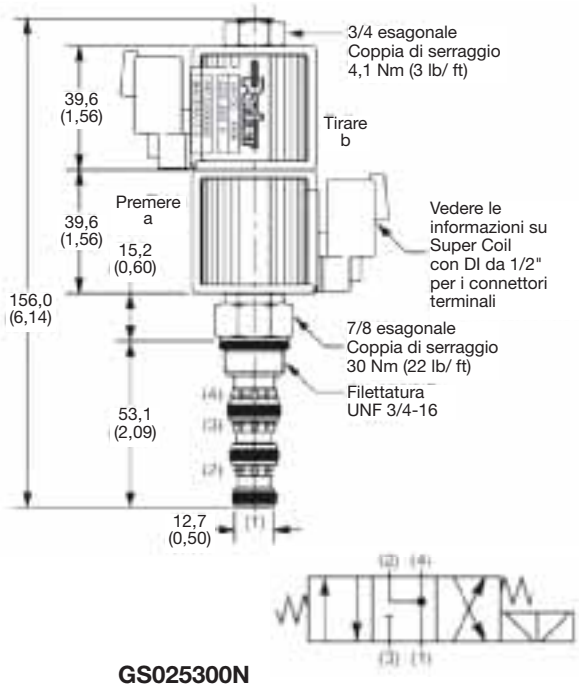

GS025300N

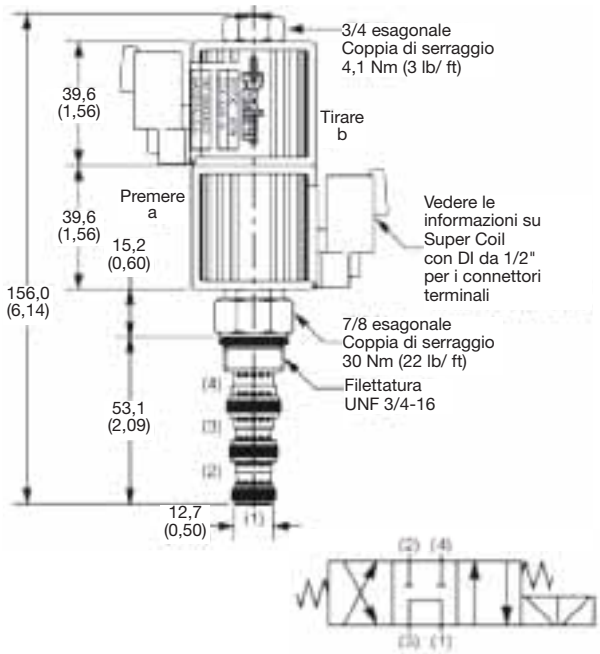

GS025700N

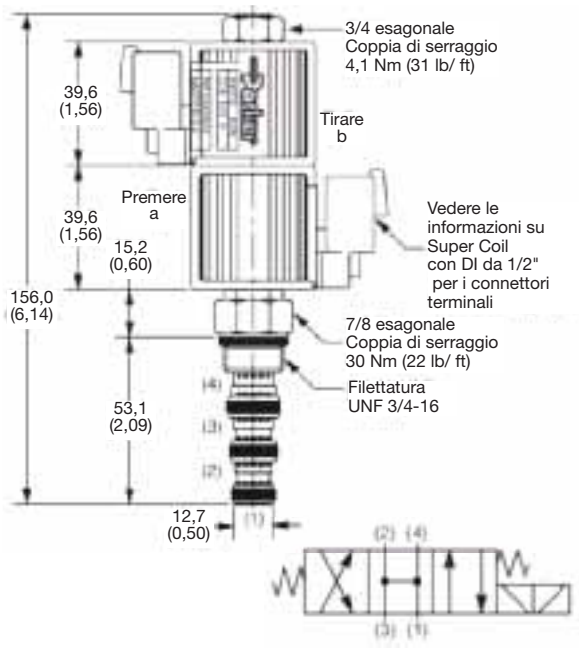

GS025900N

Serie	Corpo	Pressione massima di ingresso (bar)	Tipo bobina	Portata (l/min)	Caratteristiche
GS025100N	B08-4-6B	350	CC	17	• Cilindro a doppio effetto e motore bidirezionale. • Utilizzare con bobina tipo CC (2 pezzi)
GS025300N	B08-4-6B	350	CC	15	
GS025700N	B08-4-6B	350	CC	13,3	
GS025900N	B08-4-6B	350	CC	13,3	

Elettrovalvole a cursore 3 posizioni

Dimensioni millimetri (pollici)

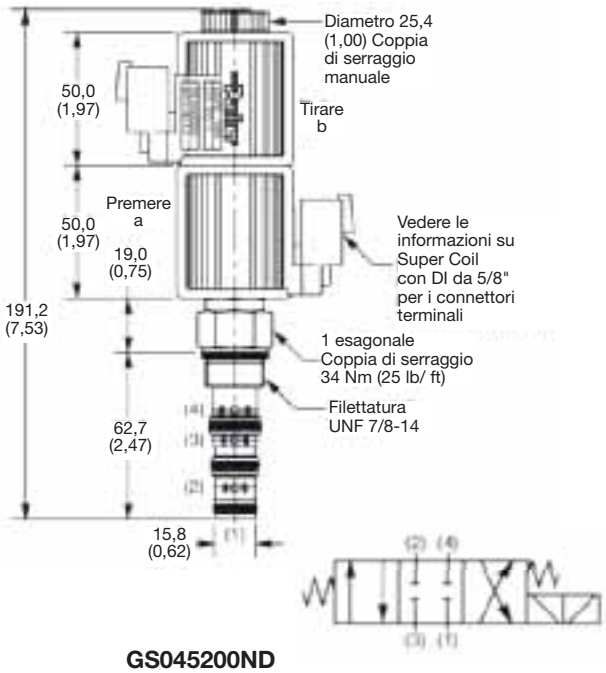

GS045200ND

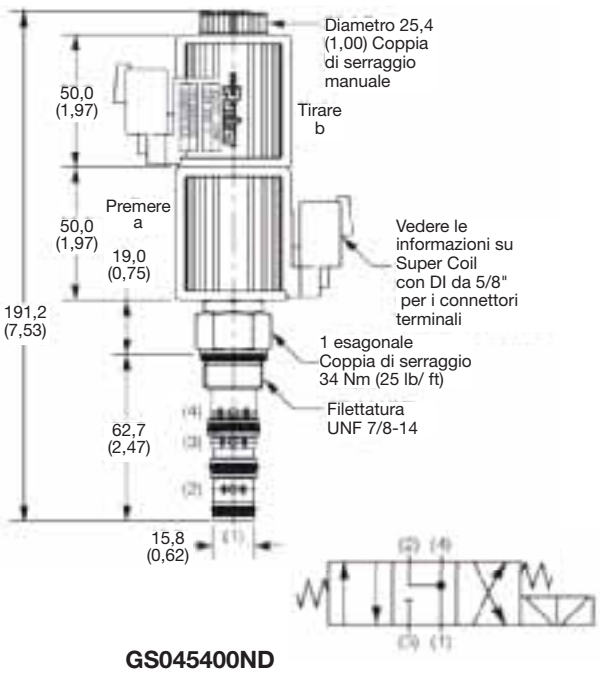

GS045400ND

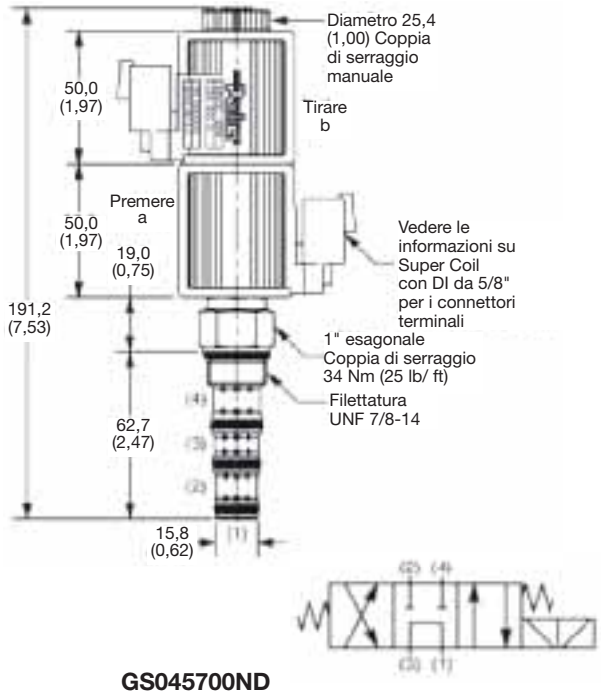

GS045700ND

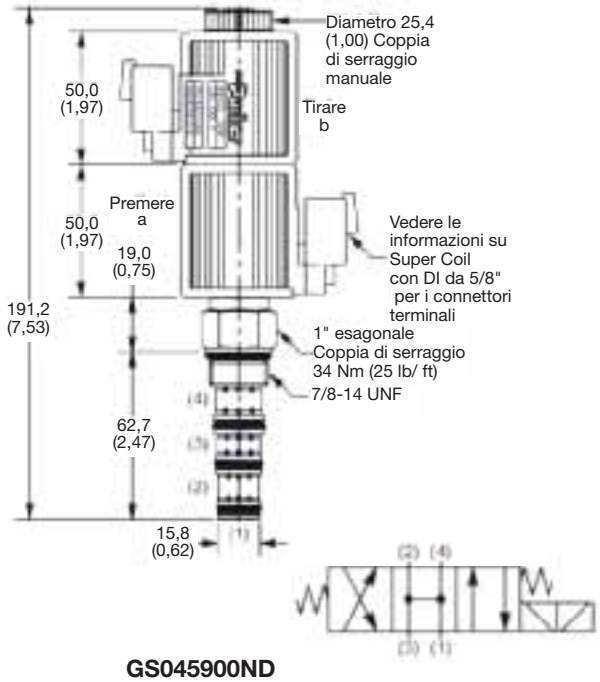

GS045900ND

Serie	Corpo	Pressione massima di ingresso (bar)	Tipo bobina	Portata (l/min)	Caratteristiche
GS045200ND	B10-4-8B	350	CA	42	• Cilindro a doppio effetto e motore bidirezionale. • Utilizzare con bobina tipo CA (2 pezzi)
GS045400ND	B10-4-8B	350	CA	42	
GS045700ND	B10-4-8B	350	CA	42	
GS045900ND	B10-4-8B	350	CA	42	

Riduttori di pressione

Dimensioni millimetri (pollici)

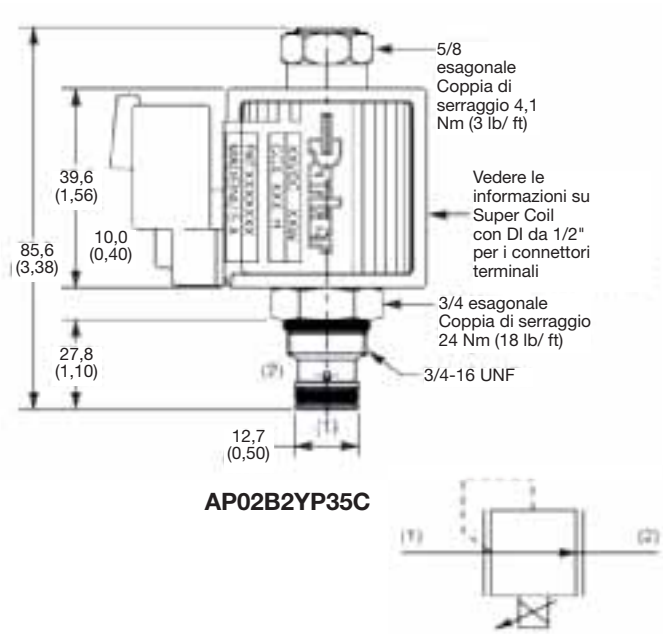

AP02B2YP35C

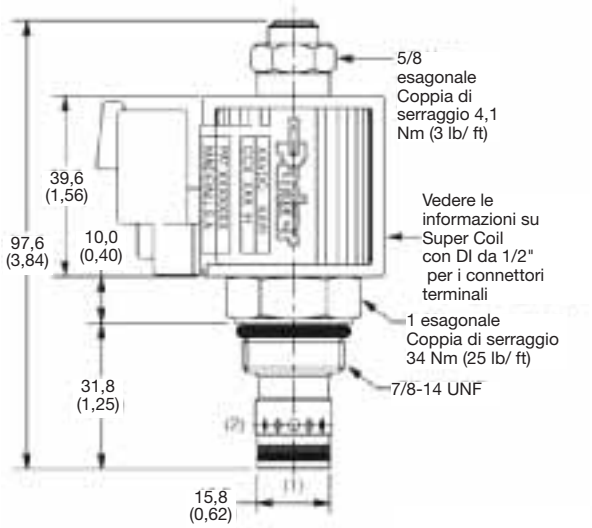

AP04G2YP35CN

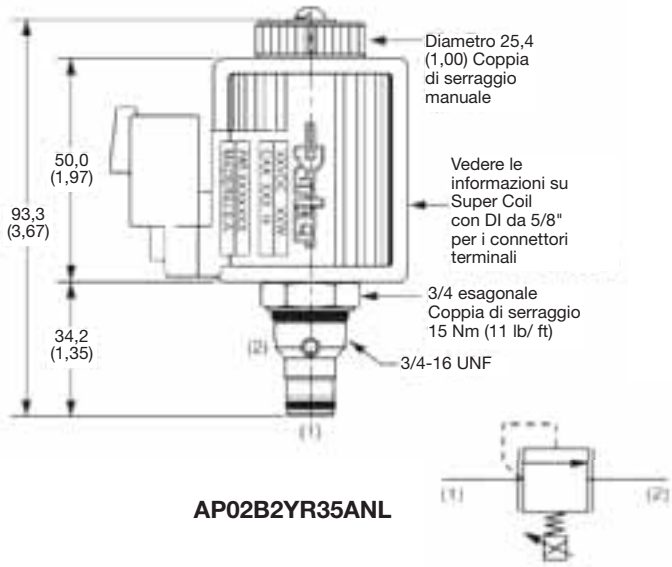

AP02B2YR35ANL

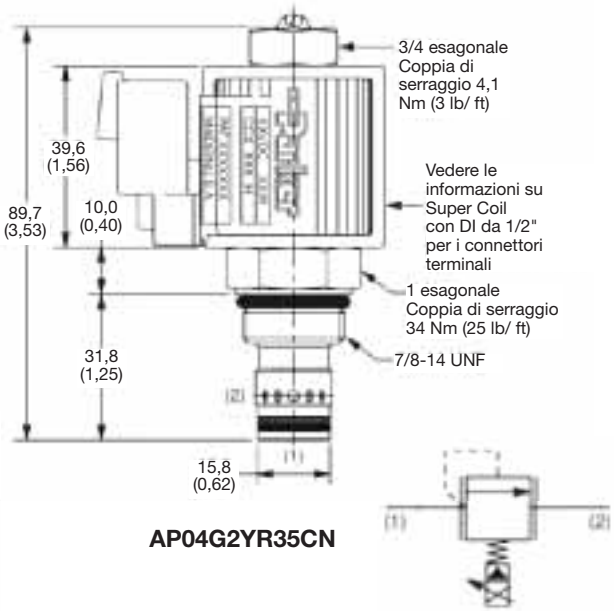

AP04G2YR35CN

Serie	Corpo	Pressione massima di ingresso (bar)	Tipo di valvola (condizione diseccitata)	Portata (l/min)	Tipo bobina	Caratteristiche
AP02B2YP35C	B08-2-6B	350	Aperta	1,3	CC	• Regolazioni di pressione alternative disponibili su richiesta.
AP04G2YP35CN	B10-2-8B	350	Aperta	95	CC	
AP02B2YR35ANL	B08-2-6B	350	Chiusa	1,9	CA	
AP04G2YR35CN	B10-2-8B	350	Chiusa	95	CC	

Regolatore di portata normalmente aperto

Dimensioni millimetri (pollici)

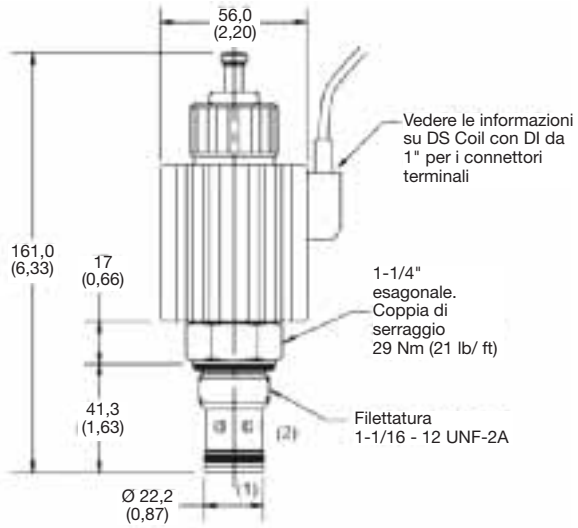

DF122N14

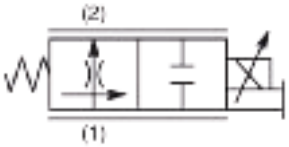

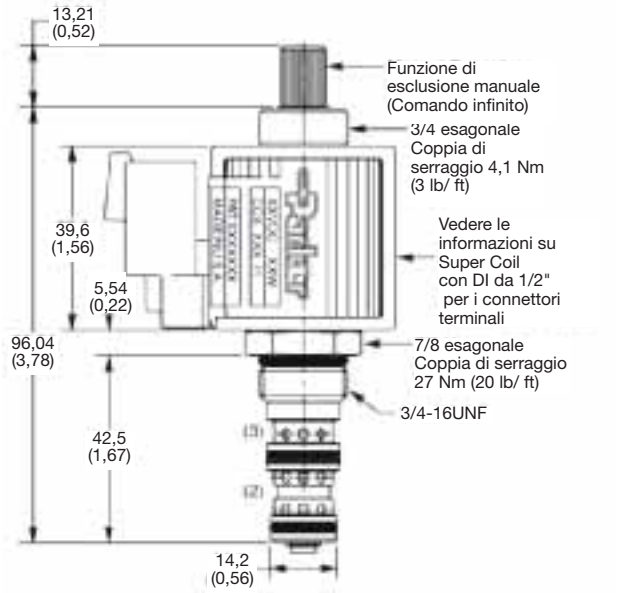

JP02P2100N

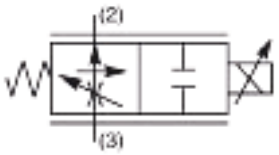

Serie	Corpo	Pressione massima di ingresso (bar)	Portata (l/min)	Tipo bobina
DF122N14	B12-2-12B	210	53	Serie da 1"
JP02P2100N	B08-3-6B	210	19	CC

Regolatori di portata a 2 vie

Dimensioni millimetri (pollici)

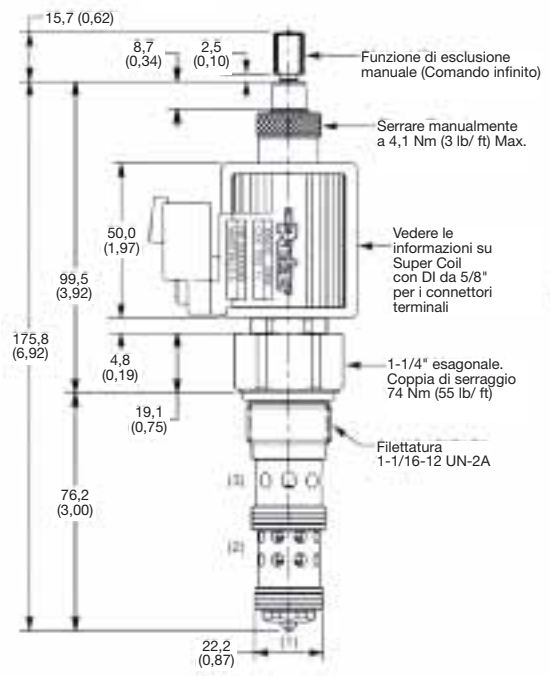

DFA125C21SN

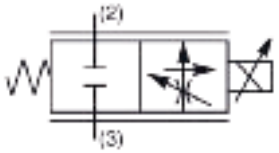

Regolatori di portata a 3 vie

Dimensioni millimetri (pollici)

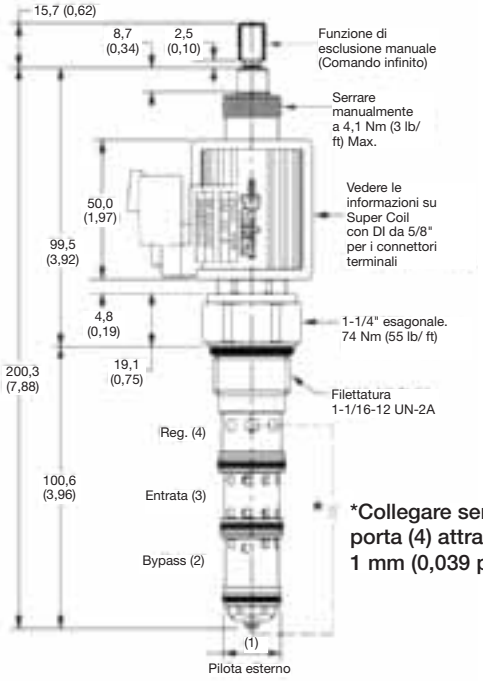

*Collegare sempre la porta (1) alla porta (4) attraverso l'orifizio da 1 mm (0,039 poll.)

DFA125C31SN

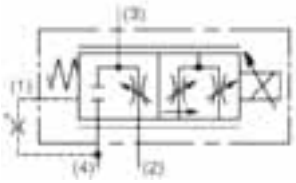

Serie	Corpo	Pressione massima di ingresso (bar)	Portata in entrata (l/min)	Portata in uscita (l/min)	Tipo bobina	Caratteristiche
DFA125C21SN	B12-3L-12T	210	75	56,8	CA	• Compensazione della pressione su tutte le porte
DFA125C31SN	B12-4L-12T	210	75	56,8	CA	

Comandi direzionali a 4 vie

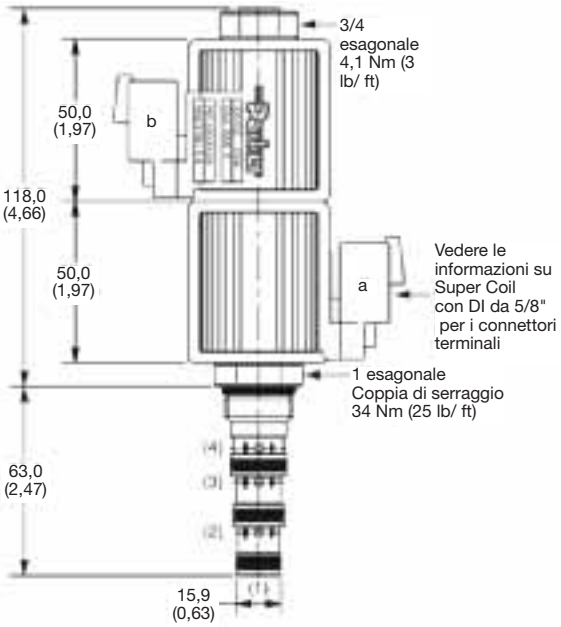

DSP105C1 / DSP105C4

Dimensioni millimetri (pollici)

CENTRO CHIUSO

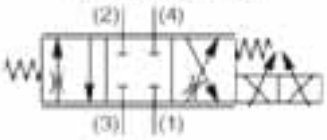

DSP105C1

CENTRO FLOTTANTE

DSP105C4

Serie	Corpo	Pressione massima serbatoio (bar)	Pressione massima di ingresso (bar)	Portata (l/min)	Tipo bobina	Caratteristiche
DSP105C1	B10-4-8B	210	350	32	CA	• Compensazione di pressione su tutte le porte
DSP105C4	B10-4-8B	210	350	32	CA	

Parker Hannifin Corporation
Hydraulic Cartridge Systems Europe
Crewkerne, UK

a 4 vie

Dimensioni millimetri (pollici)

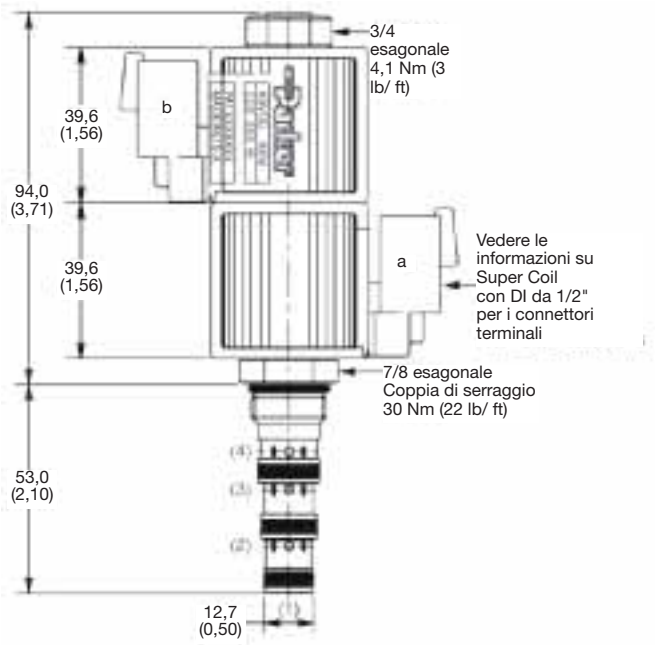

GP0251N

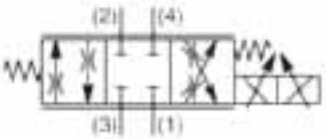

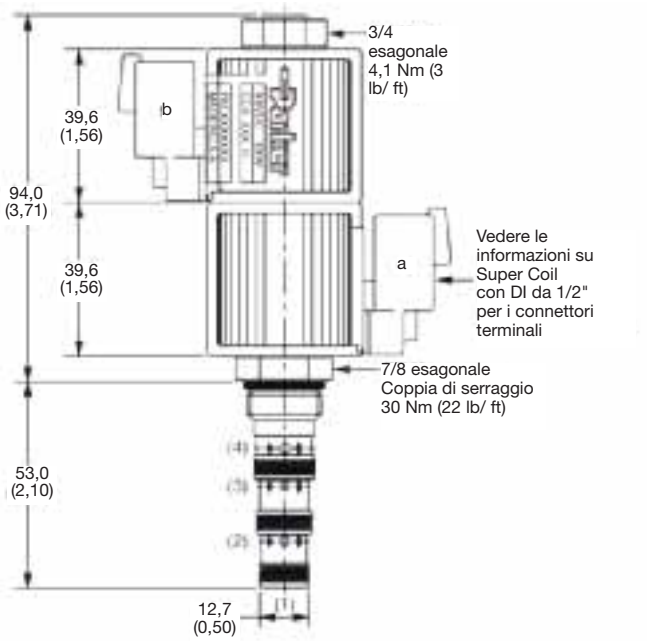

GP0253N

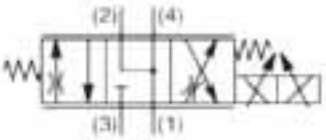

Serie	Corpo	Pressione massima di linea serbatoio (bar)	Pressione massima di ingresso (bar)	Portata (l/min)	Tipo bobina	Caratteristiche
GP0251N	B08-4-6B	210	350	17	CC	• Utilizzabile con compensatore a parte.
GP0253N	B08-4-6B	210	350	15	CC	

Parker Hannifin Corporation
Hydraulic Cartridge Systems Europe
Crewkerne, UK

Regolatore di portata normalmente chiuso

Dimensioni millimetri (pollici)

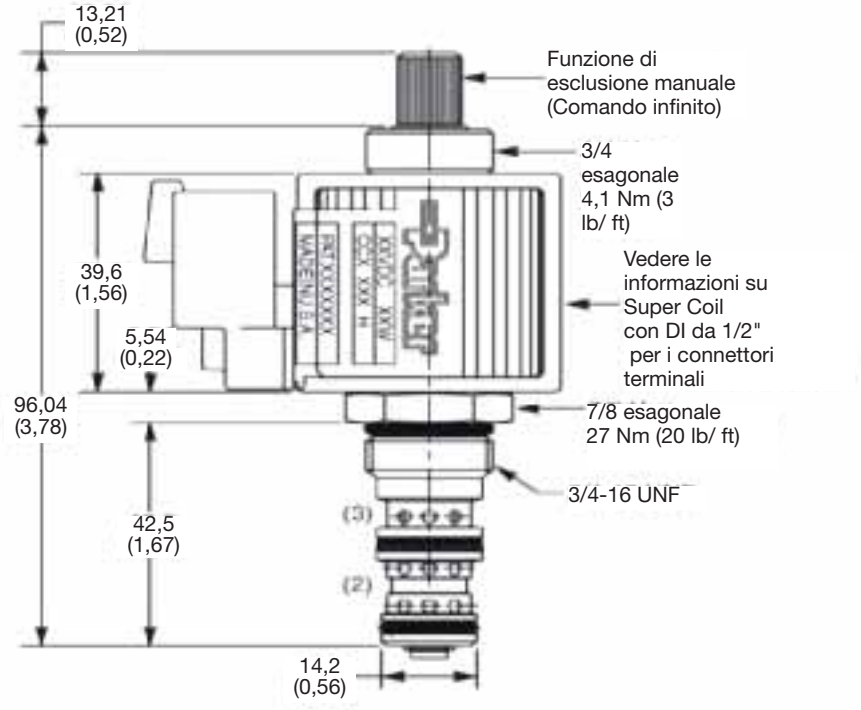

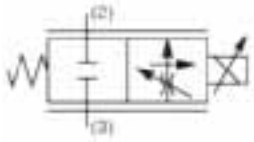

JP02C2100N

Serie	Corpo	Pressione massima di ingresso (bar)	Tipo bobina	Portata (l/min)	Caratteristiche
JP02C2100N	B08-3-6B	210	CC	23	• Cursore e alloggiamento non magnetici.

Parker Hannifin Corporation
Hydraulic Cartridge Systems Europe
Crewkerne, UK

Tipo CC

Dimensioni millimetri (pollici)

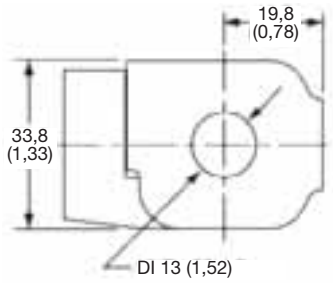

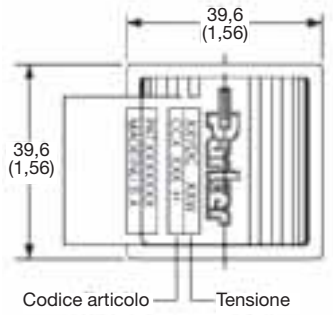

D - DIN 43650
(cavo di massa solo su c.a.)

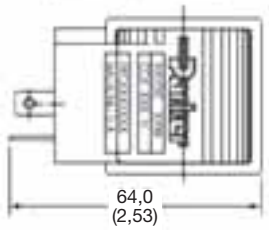

H - Deutsch integrato
DT04 - 2P - EP04
HE - Deutsch integrato con diodo da 3 A
misura di + e -

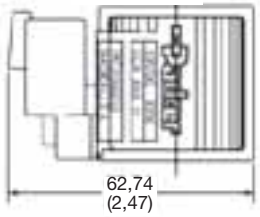

A - Amp. Junior
AD - Amp. Junior con diodi da 3 A.
misura di + e -

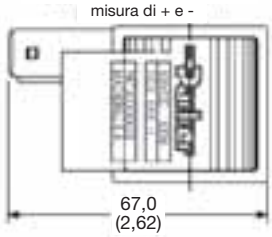

Serie	Terminazioni	Watt	Volt	Ampere	Ohm	Caratteristiche
CCP012D	DIN 43650 DC	19	12VDC	1,58	7,58	• Diametro tubo 1/2"
CCP024D	DIN 43650 DC	19	24VDC	0,79	30,30	
CCP012A	AMP Jr	19	12VDC	1,58	7,58	
CCP024A	AMP Jr	19	24VDC	0,79	30,30	
CCP012H	Deutsch integrata	19	12VDC	1,58	7,58	
CCP024H	Deutsch integrata	19	24VDC	0,79	30,30	
CCP230D	DIN 43650 AC	22	230VAC	0,12	1919	

Tipo CA

Dimensioni millimetri (pollici)

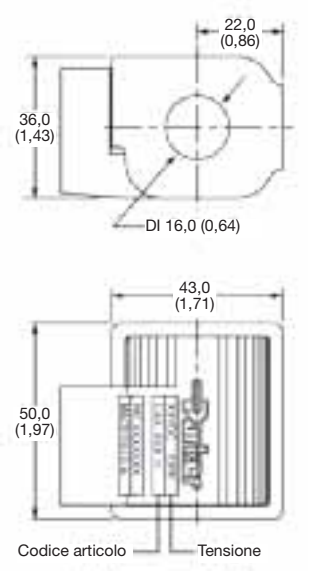

D - DIN 43650
(cavo di massa solo su c.a.)

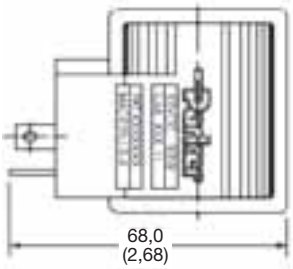

H - Deutsch integrato
DT04 - 2P - EP04
HE - Deutsch integrato con diodo da 3 A
misura di + e -

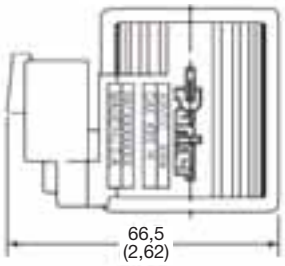

Serie	Terminazioni	Watt	Volt	Ampere	Ohm	Caratteristiche
CAP012D	DIN 43650 DC	28	12VDC	2,33	5,14	• Diametro tubo 5/8"
CAP024D	DIN 43650 DC	28	24VDC	1,17	20,6	
CAP012H	Deutsch integrata	28	12VDC	2,33	5,14	
CAP024H	Deutsch integrata	28	24VDC	1,17	20,6	
CAP230D	DIN 43650 AC	28	230VAC	0,15	1430	

Parker Hannifin Corporation
Hydraulic Cartridge Systems Europe
Crewkerne, UK

CETOP 3, Cartpak

Dimensioni millimetri (pollici)

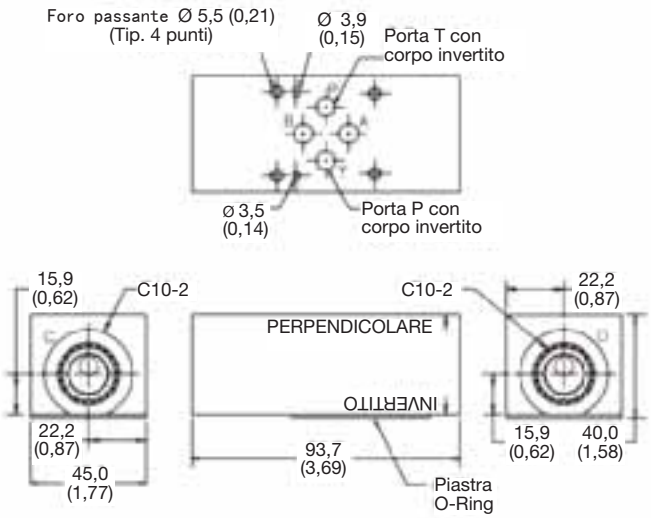

Schema del corpo

PERPENDICOLARE

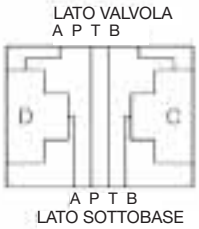

INVERTITO

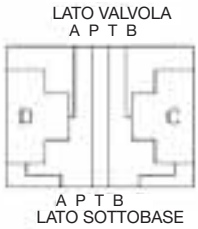

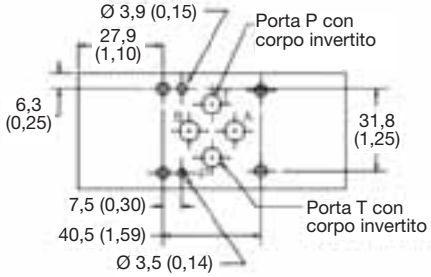

BD03-ABN-A

Serie	Range di pressione (bar)	Materiale corpo	Utilizzo tipico
BD03-ABN-A	**210**	**Alluminio**	• Regolazione di portata con misurazione in entrata e in uscita.

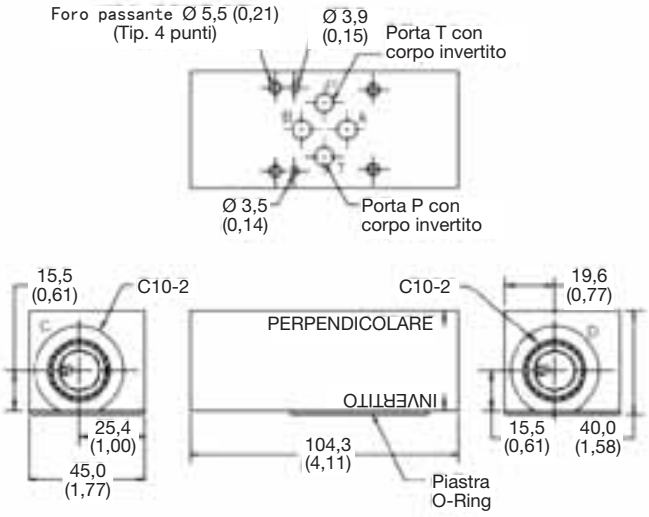

PERPENDICOLARE

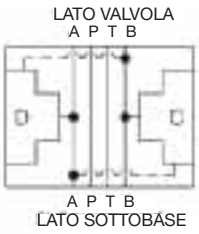

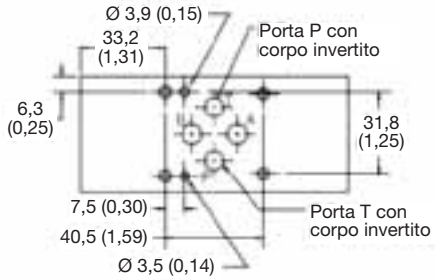

BD03-ABX-A

Serie	Range di pressione (bar)	Materiale corpo	Utilizzo tipico
BD03-ABX-A	**210**	**Alluminio**	• Valvola di massima pressione incrociata.

CETOP 3, Cartpak

Dimensioni millimetri (pollici)

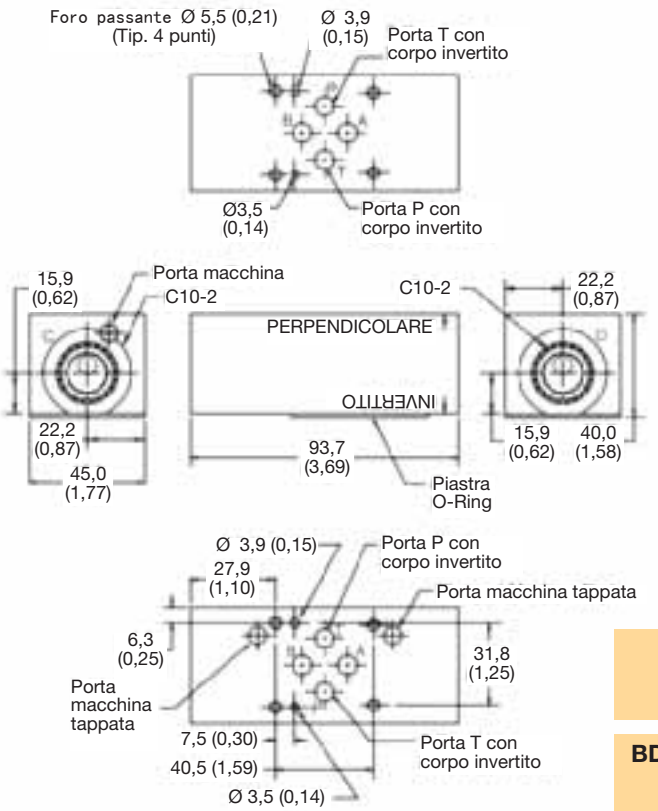

BD03-ABT-A

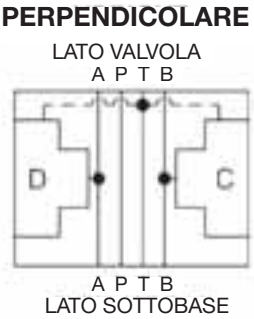

Serie	Range di pressione (bar)	Materiale corpo	Utilizzo tipico
BD03-ABT-A	210	Alluminio	• Valvole di massima pressione A o B o valvole di ritegno.

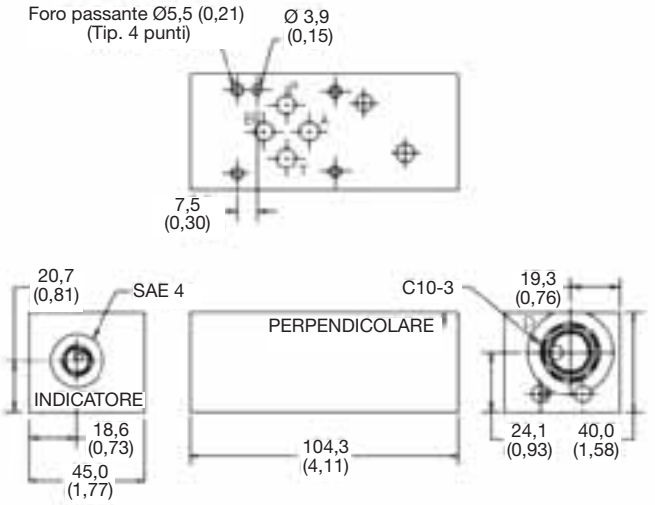

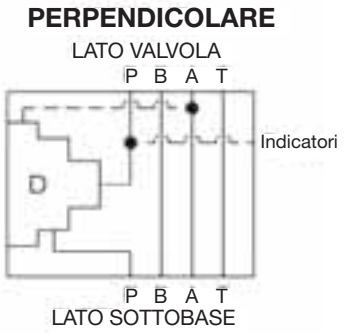

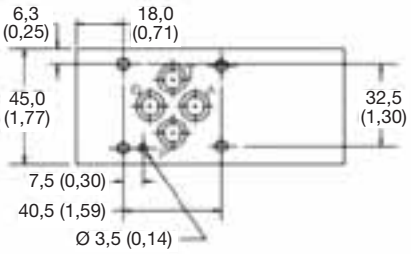

BD03-BDA-A

Serie	Range di pressione (bar)	Materiale corpo	Utilizzo tipico
BD03-BDA-A	210	Alluminio	• Regolatore di pressione linea P.

CETOP 3, Cartpak

Dimensioni millimetri (pollici)

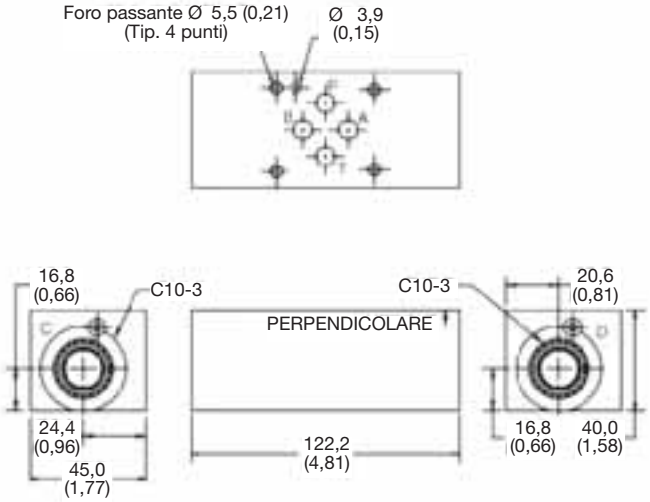

PERPENDICOLARE

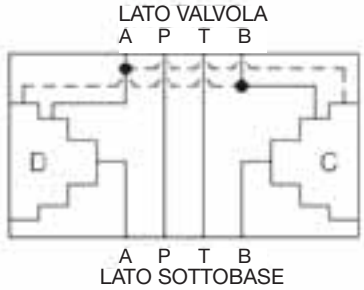

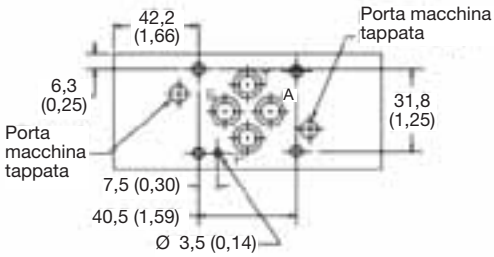

BD03-DDX-A

Serie	Range di pressione (bar)	Materiale corpo	Utilizzo tipico
BD03-DDX-A	210	Alluminio	• Valvola di bilanciamento doppia o di regolazione pressione porta. A e B .

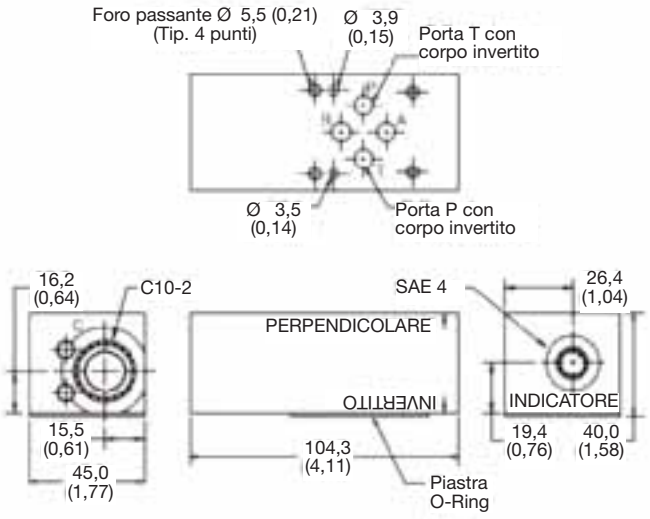

PERPENDICOLARE

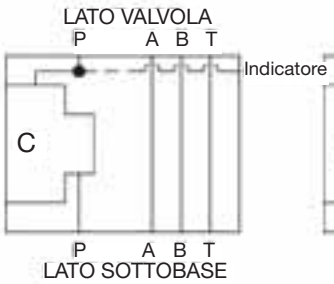

INVERTITO

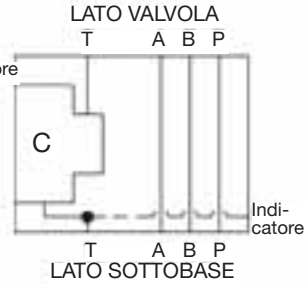

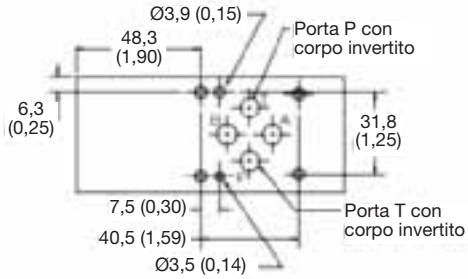

BD03-PN-A

Serie	Range di pressione (bar)	Materiale corpo	Utilizzo tipico
BD03-PN-A	210	Alluminio	• Valvola di ritegno linea P oppure regolatore di portata.

CETOP 3, Cartpak

Dimensioni millimetri (pollici)

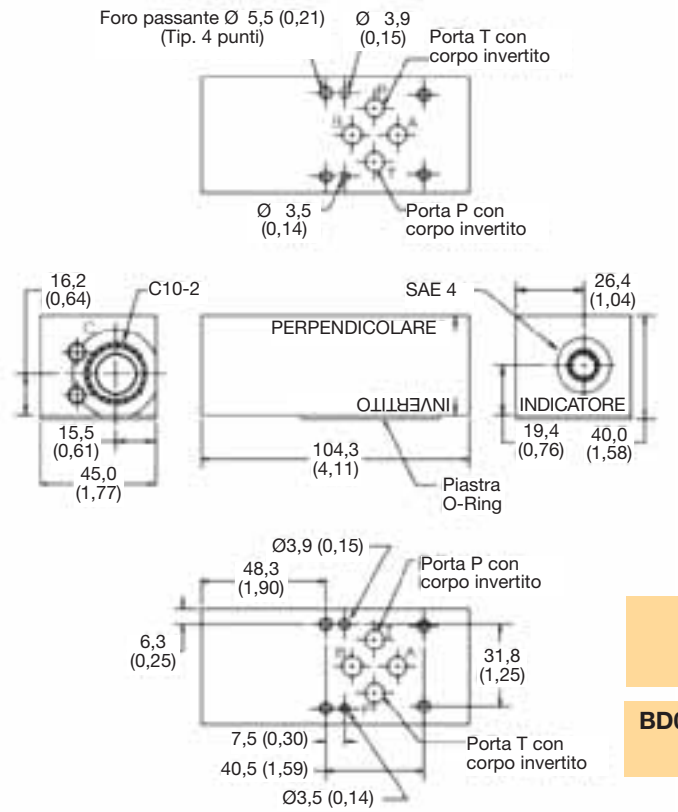

BD03-PN2-A

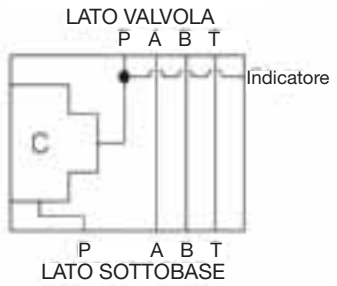

Serie	Range di pressione (bar)	Materiale corpo	Utilizzo tipico
BD03-PN2-A	210	Alluminio	• Valvola a spillo linea P

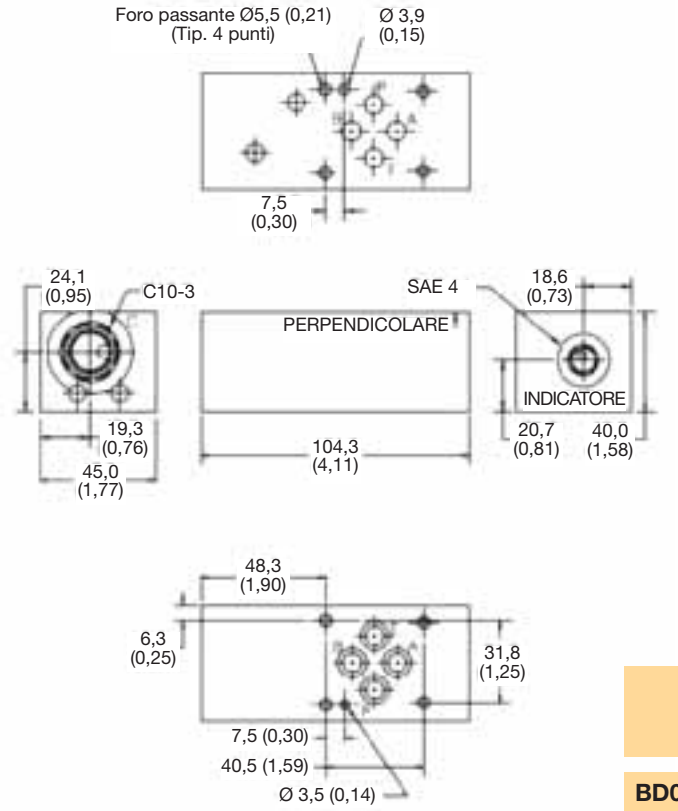

BD03-PNR-A

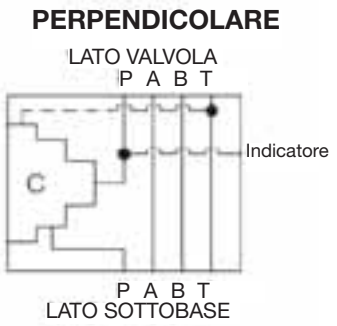

Serie	Range di pressione (bar)	Materiale corpo	Utilizzo tipico
BD03-PNR-A	210	Alluminio	• Regolatore di pressione linea P.

CETOP 3, Cartpak

Dimensioni millimetri (pollici)

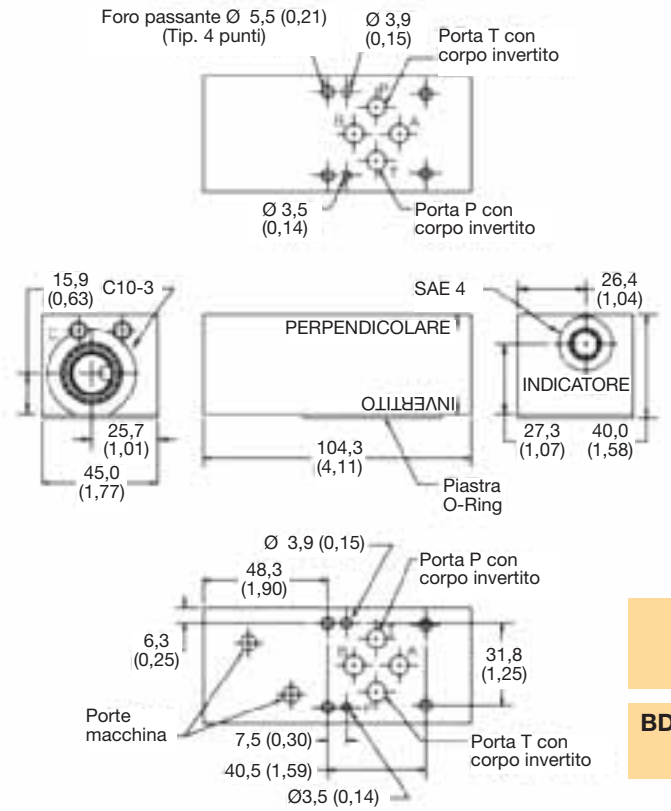

BD03-PNS-A

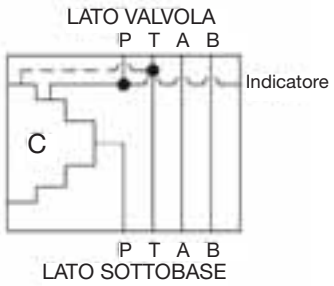

Serie	Range di pressione (bar)	Materiale corpo	Utilizzo tipico
BD03-PNS-A	210	Alluminio	• Valvola di sequenza linea P.

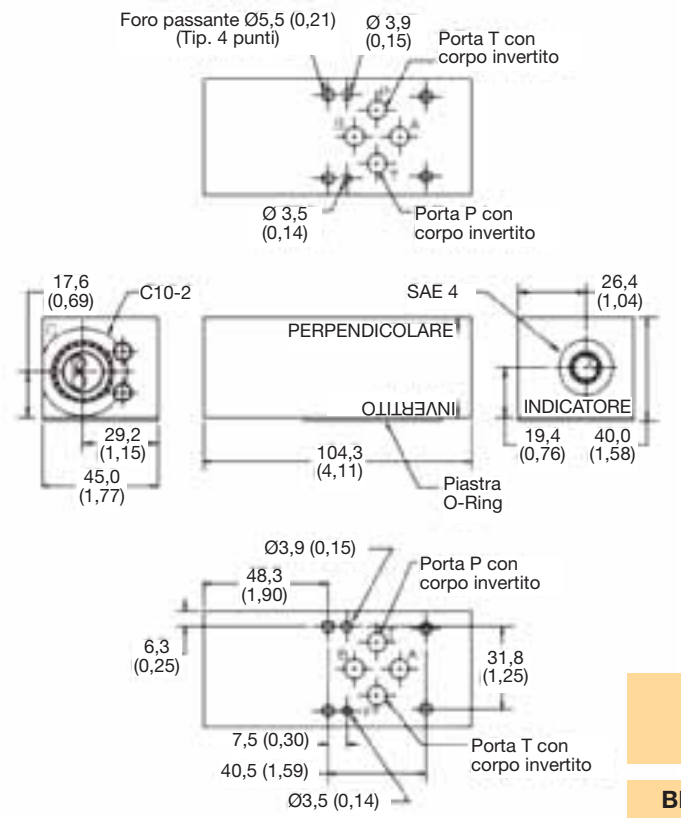

BD03-PT-A

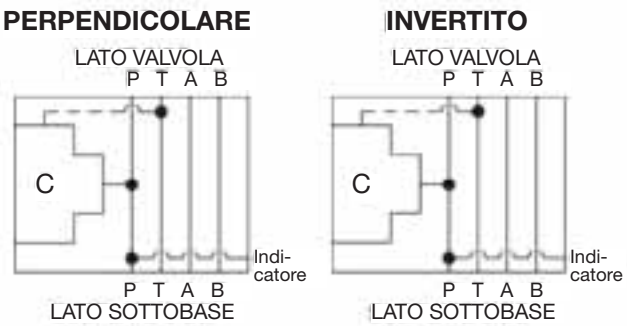

Serie	Range di pressione (bar)	Materiale corpo	Utilizzo tipico
BD03-PT-A	210	Alluminio	• Valvola di massima pressione P - T.

Standard, acciaio

Dimensioni millimetri (pollici)

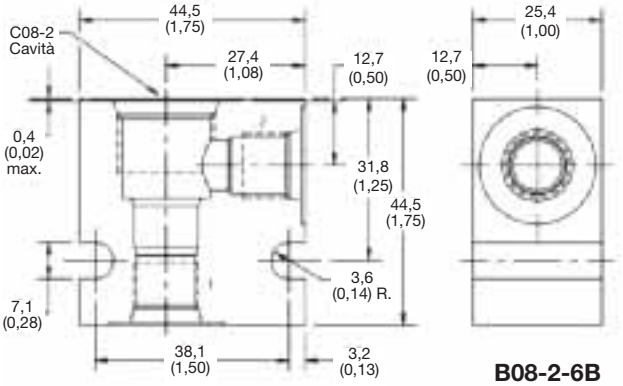

B08-2-6B

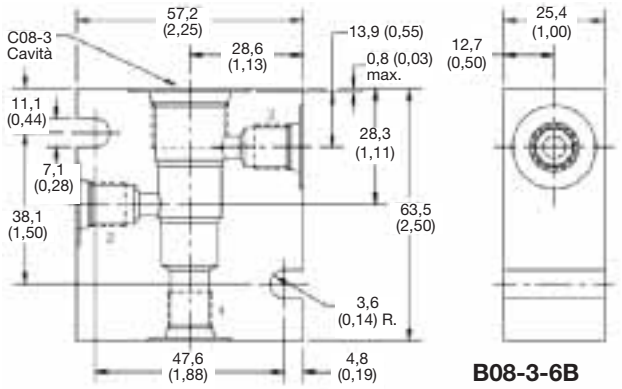

B08-3-6B

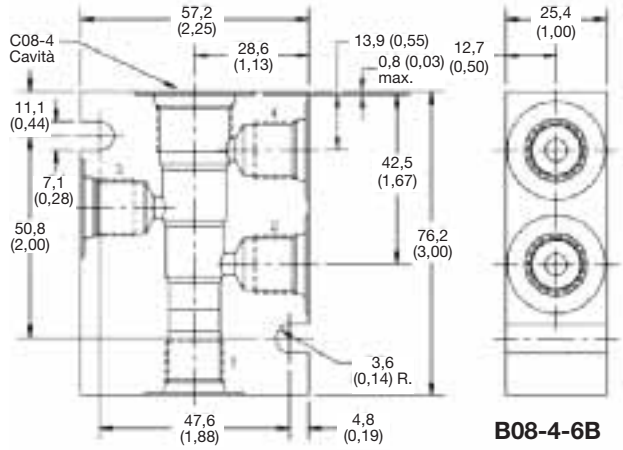

B08-4-6B

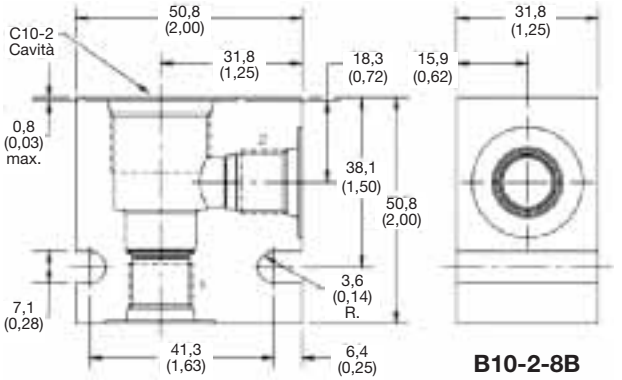

B10-2-8B

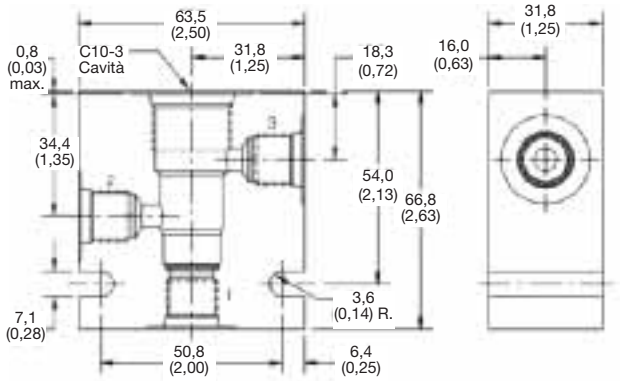

B10-3-8B

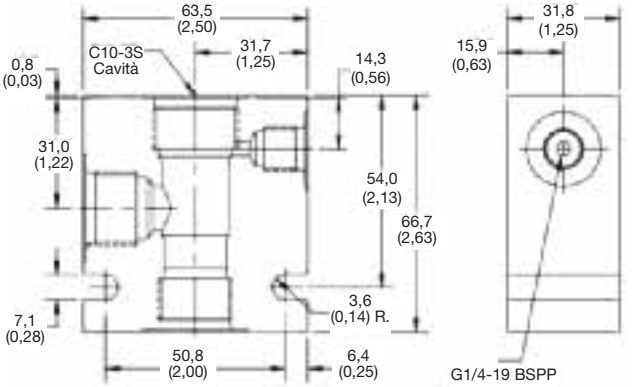

B10-3S-8B

Serie	Cavità	Dimensione porta	Porte	Materiale corpo
B08-2-6B	C08-2	3/8 BSP	a 2 vie	Acciaio
B08-3-6B	C08-3	3/8 BSP	a 3 vie	Acciaio
B08-4-6B	C08-4	3/8 BSP	a 4 vie	Acciaio
B10-2-8B	C10-2	1/2 BSP	a 2 vie	Acciaio
B10-3-8B	C10-3	1/2 BSP	a 3 vie	Acciaio
B10-3S-8B	C10-3S	1/4 BSP e 1/2 BSP	a 3 vie (corta)	Acciaio

Parker Hannifin Corporation
Hydraulic Cartridge Systems Europe
Crewkerne, UK

Standard, acciaio

Dimensioni millimetri (pollici)

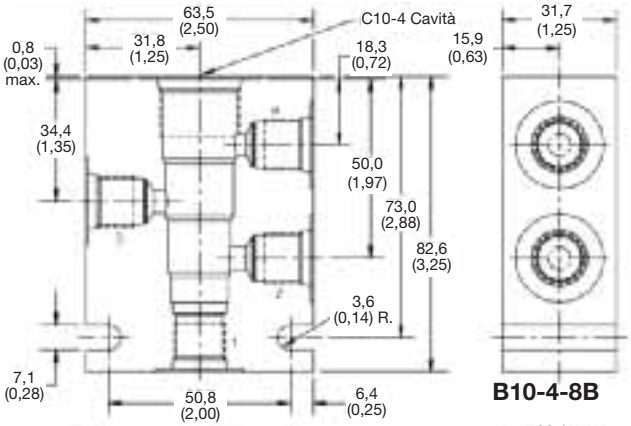

B10-4-8B

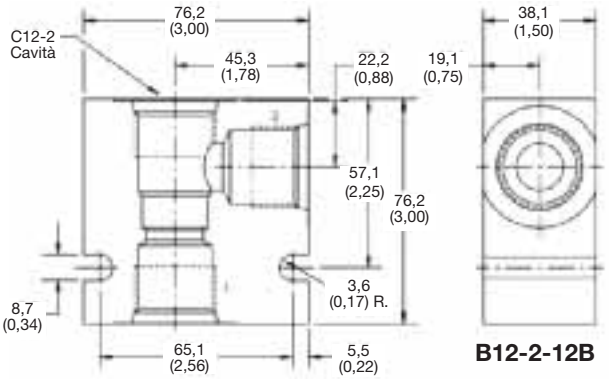

B12-2-12B

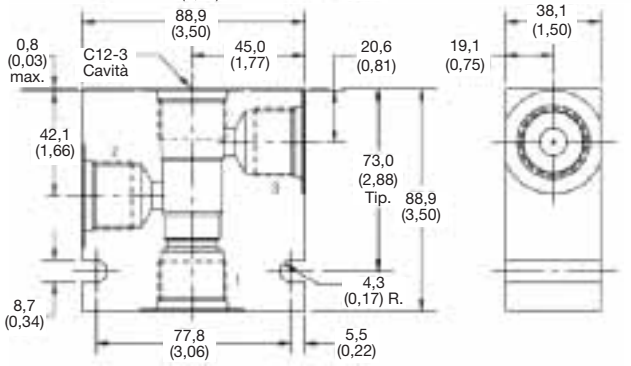

B12-3-12B

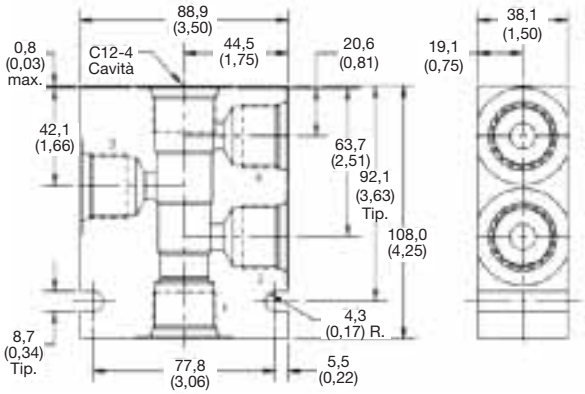

B12-4L-12T

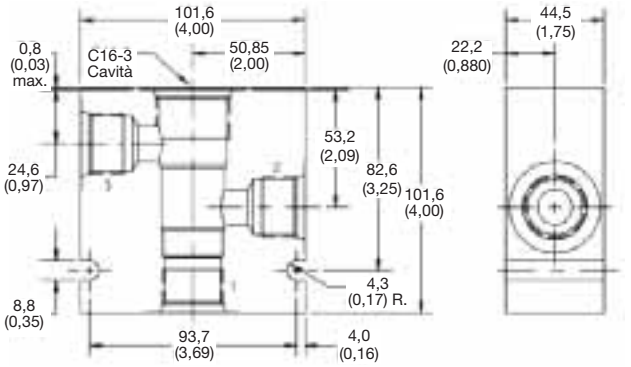

B16-2-16B

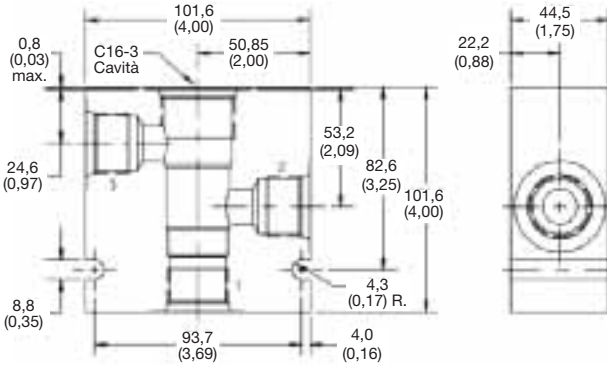

B16-3-16B

Serie	Cavità	Dimensione porta	Porte	Materiale corpo
B10-4-8B	C10-4	1/2 BSP	a 4 vie	Acciaio
B12-2-12B	C12-2	3/4 BSP	a 2 vie	Acciaio
B12-3-12B	C12-3	3/4 BSP	a 3 vie	Acciaio
B12-4L-12T	C12-4	3/4 BSP	a 4 vie	Acciaio
B16-2-16B	C16-2	1 BSP	a 2 vie	Acciaio
B16-3-16B	C16-3	1 BSP	a 3 vie	Acciaio

Controllo del carico

Dimensioni millimetri (pollici)

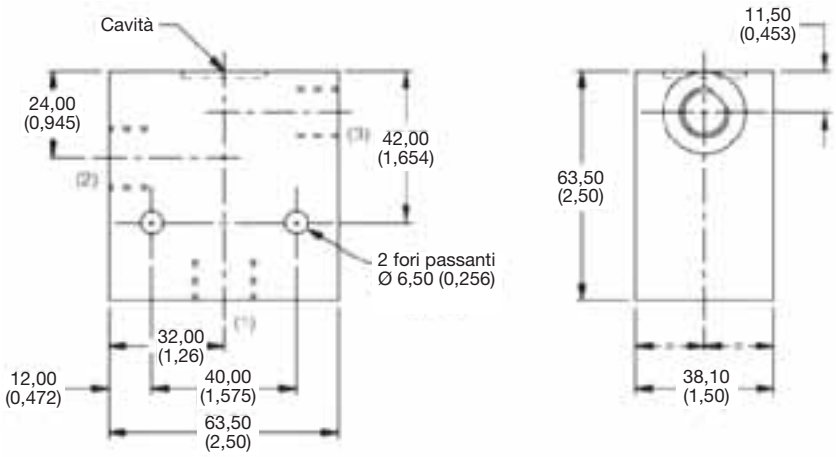

LB10310S

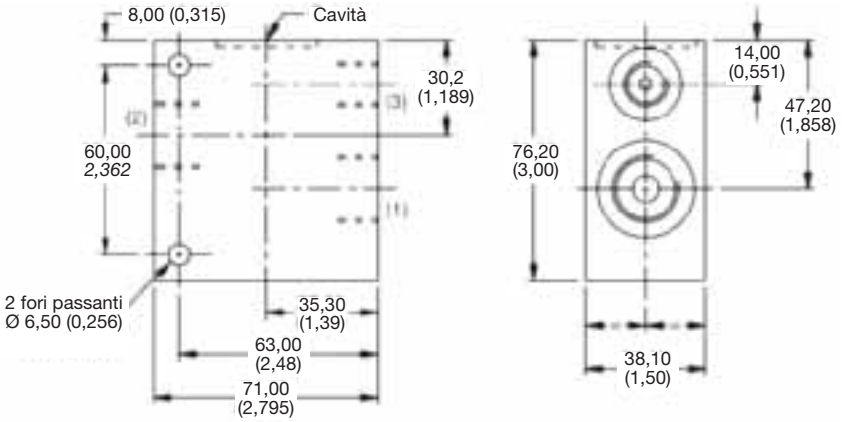

LB10251S

Serie	Cavità	Porte	Principale	Aux	Caratteristiche
LB10310S	53-1	a 3 vie	3/8 BSP	1/4 BSP	• Utilizzare con valvola di controllo del carico E*B020 o D4A020.
LB10251S	68-1	a 3 vie	1/2 BSP	1/4 BSP	• Utilizzare con E2B040 o E6B040

Parker Hannifin Corporation
Hydraulic Cartridge Systems Europe
Crewkerne, UK

Controllo del carico - doppie

Dimensioni millimetri (pollici)

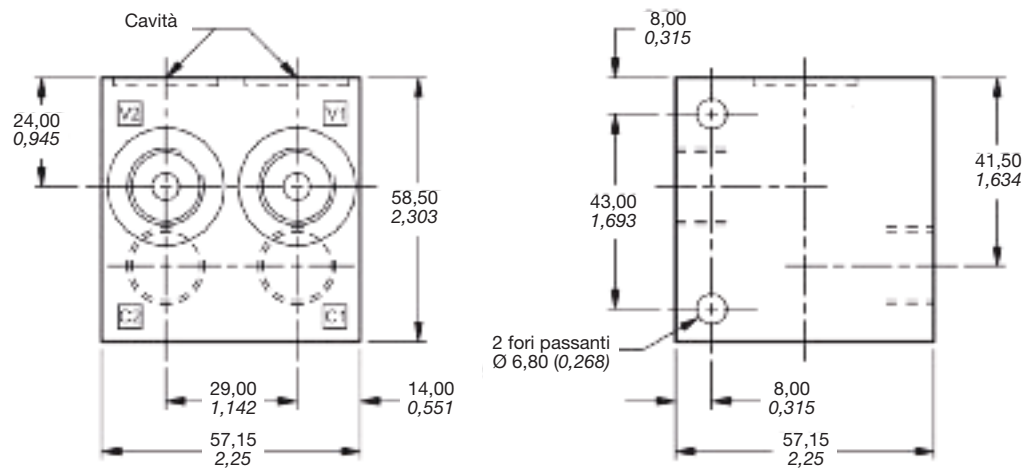

LB10312S

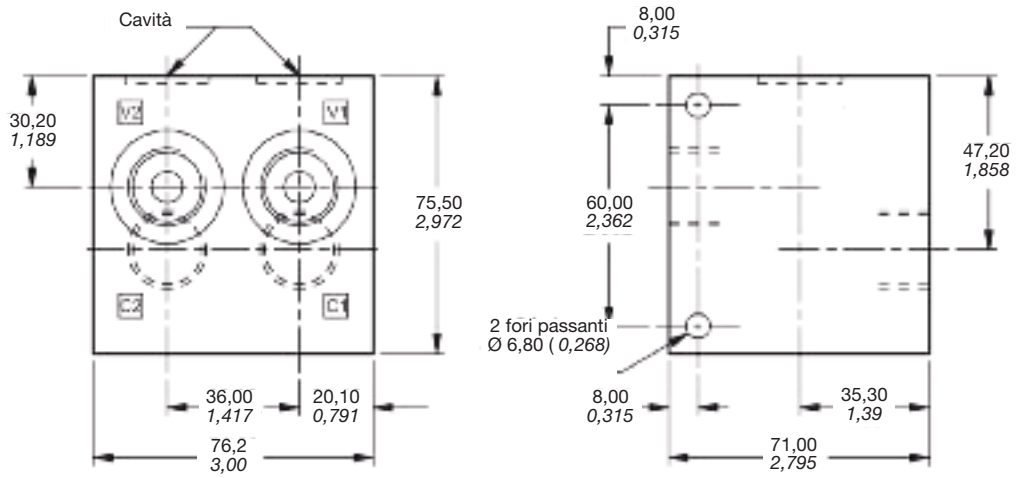

LB10259S

Serie	Cavità	Porte	Principale	Aux	Caratteristiche
LB10312S	53-1	Doppie a 4 vie	3/8 BSP	1/4 BSP	• Utilizzare con E2B020 (2 pezzi) o E6B020 (2 pezzi)
LB10259S	68-1	Doppie a 4 vie	3/8 BSP	-------	• Utilizzare con E2B040 (2 pezzi) o E6B040 (2 pezzi)

Controllo del carico

Dimensioni millimetri (pollici)

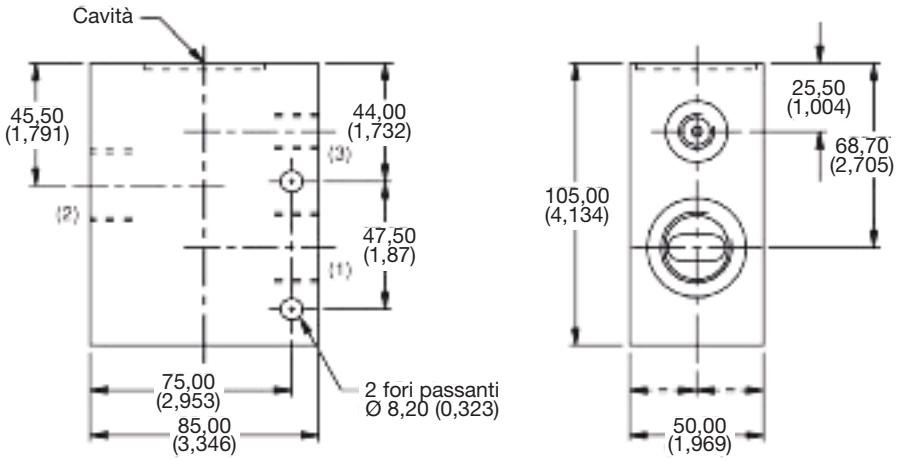

LB10039S

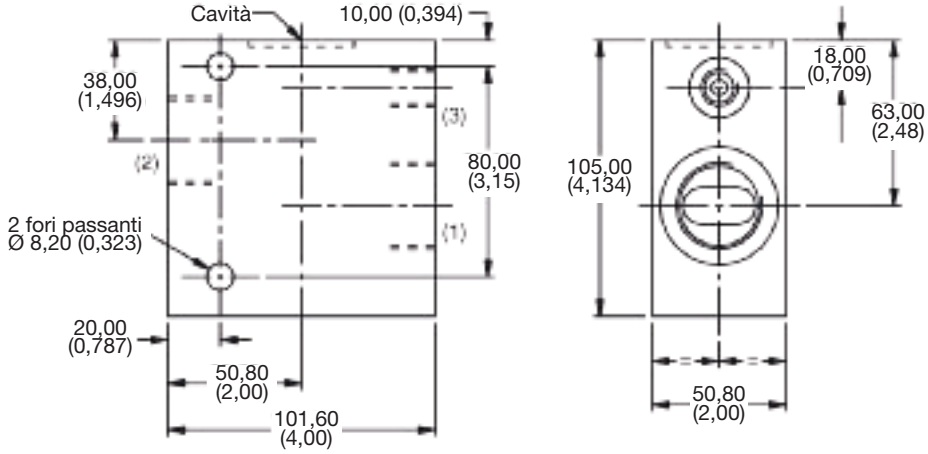

LB10076S

Serie	Cavità	Porte	Principale	Aux	Caratteristiche
LB10039S	3C	a 3 vie	3/4 BSP	1/4 BSP	• Utilizzare con valvole di controllo del carico E2B060 o E6B060.
LB10076S	3M	a 3 vie	1 BSP	1/4 BSP	• Utilizzare con valvole di controllo del carico E2E125.

Controllo del carico - doppie

Dimensioni millimetri (pollici)

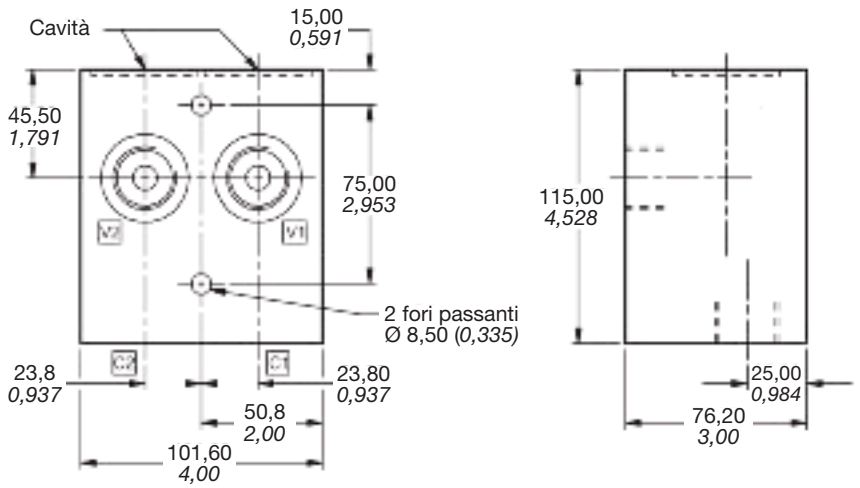

LB10034S

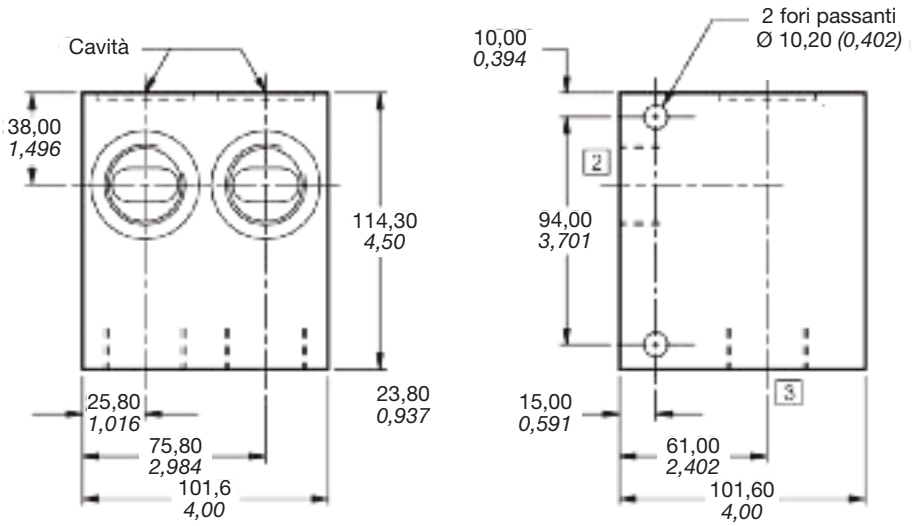

LB10104S

Serie	Cavità	Porte	Principale	Aux	Caratteristiche
LB10034S	3C	a 4 vie	3/4 BSP	-------	• Utilizzare con valvole di controllo del carico E2B060 (2 pezzi) o E6B060 (2 pezzi).
LB10104S	3M	Doppie a 4 vie	1 BSP	-------	• Utilizzare con valvole di controllo del carico E2F125 (2 pezzi).

Tipo in acciaio speciale

Dimensioni millimetri (pollici)

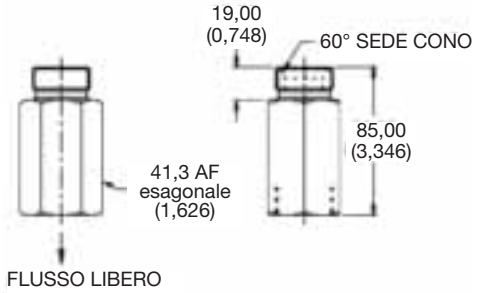

LB10210S

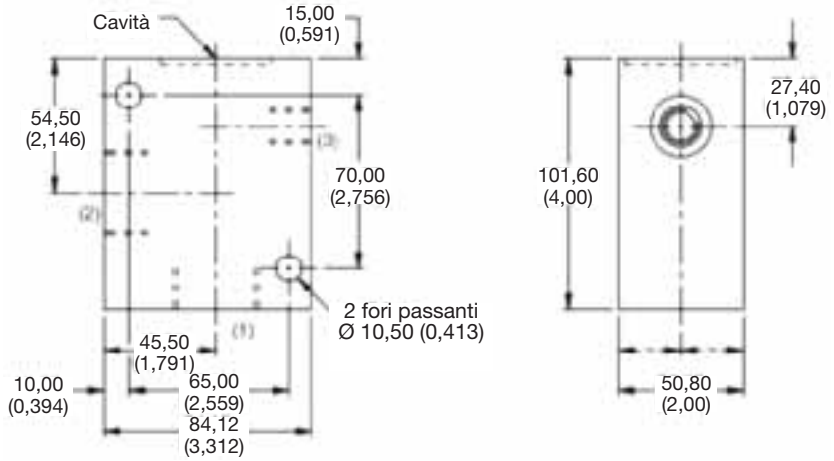

LB10056S

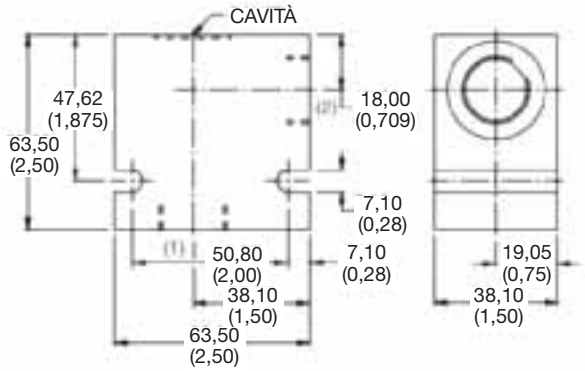

LB10545S

Serie	Cavità	Porte	Principale	Aux	Caratteristiche
LB10210S	2C	a 2 vie	1 BSP	-------	• Utilizzare con inserto valvola di ritegno D1B125.
LB10056S	3A	a 3 vie	1 BSP	1/4 BSP	• Utilizzare con valvola di regolazione della portata J1A125.
LB10545S	2R	a 2 vie	1/2 BSP	1/4 BSP	• Utilizzare con elettrovalvole bidirezionali.

Tipo in acciaio speciale

Dimensioni millimetri (pollici)

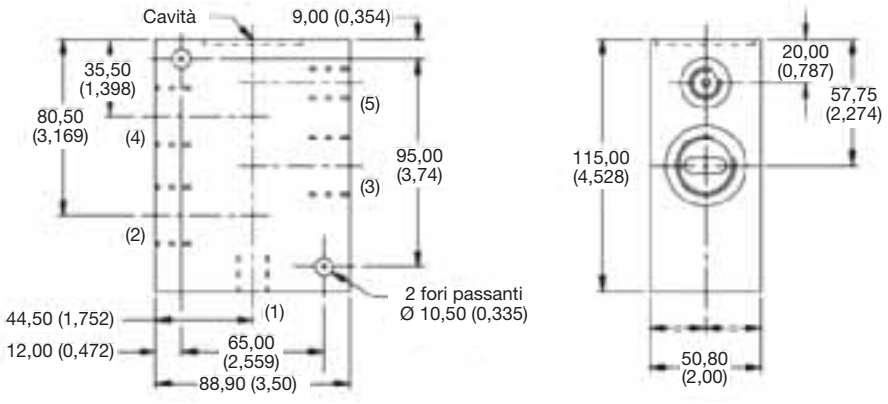

LB10314S

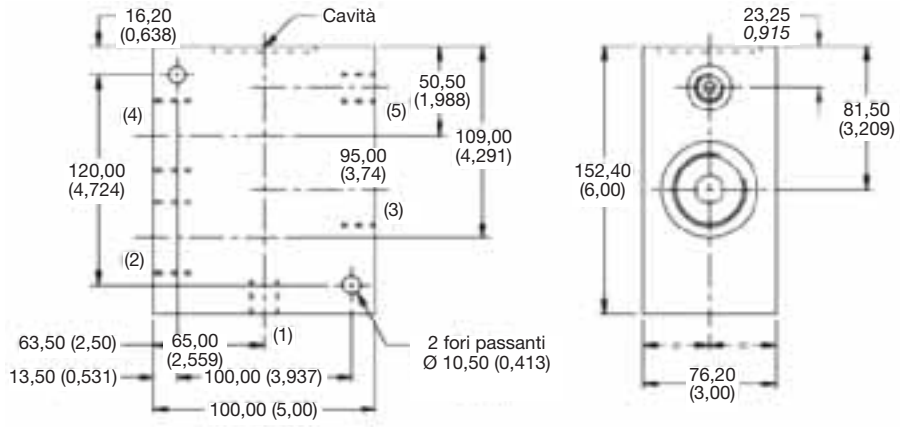

LB10316S

Serie	Cavità	Porte	Principale	Aux	Caratteristiche
LB10314S	5A	a 5 vie	3/4 BSP	1/4 BSP	• Utilizzare con valvole di controllo direzionale 5A125.
LB10316S	100-1	a 5 vie	1 1/4 BSP	3/8 BSP	• Utilizzare con valvole di controllo direzionale N5A300.

Parker nel mondo

Europa, Medio Oriente, Africa

AE – Emirati Arabi Uniti, Dubai
Tel: +971 4 8127100
parker.me@parker.com

AT – Austria, Wiener Neustadt
Tel: +43 (0)2622 23501-0
parker.austria@parker.com

AT – Europa Orientale, Wiener Neustadt
Tel: +43 (0)2622 23501 900
parker.easteurope@parker.com

AZ – Azerbaijan, Baku
Tel: +994 50 2233 458
parker.azerbaijan@parker.com

BE/LU – Belgio, Nivelles
Tel: +32 (0)67 280 900
parker.belgium@parker.com

BY – Bielorussia, Minsk
Tel: +375 17 209 9399
parker.belarus@parker.com

CH – Svizzera, Etoy
Tel: +41 (0)21 821 87 00
parker.switzerland@parker.com

CZ – Repubblica Ceca, Klecany
Tel: +420 284 083 111
parker.czechrepublic@parker.com

DE – Germania, Kaarst
Tel: +49 (0)2131 4016 0
parker.germany@parker.com

DK – Danimarca, Ballerup
Tel: +45 43 56 04 00
parker.denmark@parker.com

ES – Spagna, Madrid
Tel: +34 902 330 001
parker.spain@parker.com

FI – Finlandia, Vantaa
Tel: +358 (0)20 753 2500
parker.finland@parker.com

FR – Francia, Contamine s/Arve
Tel: +33 (0)4 50 25 80 25
parker.france@parker.com

GR – Grecia, Atene
Tel: +30 210 933 6450
parker.greece@parker.com

HU – Ungheria, Budapest
Tel: +36 1 220 4155
parker.hungary@parker.com

IE – Irlanda, Dublino
Tel: +353 (0)1 466 6370
parker.ireland@parker.com

IT – Italia, Corsico (MI)
Tel: +39 02 45 19 21
parker.italy@parker.com

KZ – Kazakhstan, Almaty
Tel: +7 7272 505 800
parker.easteurope@parker.com

NL – Paesi Bassi, Oldenzaal
Tel: +31 (0)541 585 000
parker.nl@parker.com

NO – Norvegia, Asker
Tel: +47 66 75 34 00
parker.norway@parker.com

PL – Polonia, Varsavia
Tel: +48 (0)22 573 24 00
parker.poland@parker.com

PT – Portogallo, Leca da Palmeira
Tel: +351 22 999 7360
parker.portugal@parker.com

RO – Romania, Bucarest
Tel: +40 21 252 1382
parker.romania@parker.com

RU – Russia, Mosca
Tel: +7 495 645-2156
parker.russia@parker.com

SE – Svezia, Spånga
Tel: +46 (0)8 59 79 50 00
parker.sweden@parker.com

SK – Slovacchia, Banská Bystrica
Tel: +421 484 162 252
parker.slovakia@parker.com

SL – Slovenia, Novo Mesto
Tel: +386 7 337 6650
parker.slovenia@parker.com

TR – Turchia, Istanbul
Tel: +90 216 4997081
parker.turkey@parker.com

UA – Ucraina, Kiev
Tel: +380 44 494 2731
parker.ukraine@parker.com

UK – Gran Bretagna, Warwick
Tel: +44 (0)1926 317 878
parker.uk@parker.com

ZA – Repubblica del Sudafrica, Kempton Park
Tel: +27 (0)11 961 0700
parker.southafrica@parker.com

Centro Europeo Informazioni Prodotti
Numero verde: 00 800 27 27 5374
(da AT, BE, CH, CZ, DE, DK, EE, ES, FI, FR, IE, IL, IS, IT, LU, MT, NL, NO, PL, PT, RU, SE, SK, UK, ZA)

America del Nord

CA – Canada, Milton, Ontario
Tel: +1 905 693 3000

US – USA, Cleveland (industriale)
Tel: +1 216 896 3000

US – USA, Elk Grove Village (mobile)
Tel: +1 847 258 6200

Asia-Pacifico

AU – Australia, Castle Hill
Tel: +61 (0)2-9634 7777

CN – Cina, Shanghai
Tel: +86 21 2899 5000

HK – Hong Kong
Tel: +852 2428 8008

IN – India, Mumbai
Tel: +91 22 6513 7081-85

JP – Giappone, Fujisawa
Tel: +81 (0)4 6635 3050

KR – Corea, Seoul
Tel: +82 2 559 0400

MY – Malaysia, Shah Alam
Tel: +60 3 7849 0800

NZ – Nuova Zelanda, Mt Wellington
Tel: +64 9 574 1744

SG – Singapore
Tel: +65 6887 6300

TH – Thailandia, Bangkok
Tel: +662 717 8140

TW – Taiwan, Taipei
Tel: +886 2 2298 8987

Sudamerica

AR – Argentina, Buenos Aires
Tel: +54 3327 44 4129

BR – Brasile, Cachoeirinha RS
Tel: +55 51 3470 9144

CL – Cile, Santiago
Tel: +56 2 623 1216

MX – Messico, Apodaca
Tel: +52 81 8156 6000

Ed. 2011-07-07

© 2011 Parker Hannifin Corporation. Tutti i diritti riservati.

Parker Hannifin Italy S.r.l.
Via Privata Archimede 1
20094 Corsico (Milano)
Tel.: +39 02 45 19 21
Fax: +39 02 4 47 93 40
parker.italy@parker.com
www.parker.com

Il tuo rivenditore Parker locale

Gamma completa di valvole a solenoide per il controllo dei fluidi

Catalogo generale

aerospace
climate control
electromechanical
filtration
fluid & gas handling
hydraulics
pneumatics
process control
sealing & shielding

Parker

ENGINEERING YOUR SUCCESS.

> 5.000

Modelli

Il catalogo comprende un elenco completo dei prodotti Parker FCDE. Consente di identificare le valvole e le bobine più indicate fino all'identificazione del codice di ordinazione.

Questo catalogo s'indirizza al personale di vendita Parker e a come obbietivo di aiutare quest'ultimi a selezionare i prodotti i più idonei per gli utenti.

AVVERTENZA - RESPONSABILITÀ DELL'UTENTE

EVENTUALI ANOMALIE, SCELTE INADEGUATE O USI IMPROPRI DEI PRODOTTI QUI DESCRITTI O DEGLI ARTICOLI CORRELATI POSSONO CAUSARE INFORTUNI, ANCHE MORTALI, E DANNI MATERIALI.

- Il presente documento e le altre informazioni divulgate da Parker Hannifin Corporation, dalle sue consociate e dai distributori autorizzati forniscono opzioni di prodotti o sistemi che devono essere ulteriormente analizzate da utenti con competenze tecniche.
- L'utente, attraverso processi di analisi e verifica, si assume la responsabilità assoluta per la scelta finale del sistema e dei componenti e per garantire che vengano soddisfatti tutti i requisiti dell'applicazione in merito a performance, resistenza, manutenzione, sicurezza e avvertenze. L'utente ha l'obbligo di analizzare tutti gli aspetti dell'applicazione, attenersi agli standard di settore applicabili e seguire le informazioni sul prodotto incluse nel catalogo dei prodotti corrente e in qualsiasi altro materiale fornito da Parker o dalle sue consociate o dai distributori autorizzati.
- Nella misura in cui Parker o le sue consociate o i distributori autorizzati forniscono opzioni di componenti o sistemi in base alle informazioni o alle specifiche indicate dall'utente, l'utente ha la responsabilità di verificare che tali informazioni e specifiche siano appropriate e sufficienti per tutte le applicazioni e gli usi ragionevolmente prevedibili dei componenti o dei sistemi.

Chi siamo?

La FCDE (Fluid Control Division Europe) è una divisione di Parker Hannifin, il leader mondiale nelle tecnologie Motion & Control.

Le competenze distintive di FCDE sono lo sviluppo e la produzione di una gamma estremamente variegata di prodotti per il controllo di fluidi, comprese valvole a solenoide e regolatori di pressione.

Dove siamo?

La nostra Sede in Europa si trova a Ginevra, dove sono presenti anche i dipartimenti di R&S, Marketing, Assistenza sui prodotti e Product Management.

I prodotti FCDE vengono realizzati principalmente a Carouge (Ginevra - Svizzera) e a Gessate (Milano - Italia).

La Parker Sales Companies e la rete di distribuzione vi assistono ovunque voi siate.

Storia

FCDE Parker svolge un ruolo primario nella produzione e nello sviluppo delle tecnologie per valvole a solenoide da oltre 60 anni, si impegna nella R&S per trovare soluzioni innovative per il mercato: ha utilizzato per prima il rubino sintetico per le applicazioni per il trattamento dell'acqua e fornisce regolatori di pressione di un'affidabilità e precisione insuperabili. L'esperienza acquisita e sviluppata nel corso degli anni è ben visibile nella qualità superiore delle soluzioni FCDE.

Mercati

I nostri prodotti e soluzioni sono progettati per mercati come: Attrezzature industrali, Automazione industriale, Automotive, Settore Trasporti, Medicale, Distributori di bevande, Controllo di fluidi e processi.

Vantaggi

Il concetto modulare dei nostri prodotti, composti da valvole a solenoide e componenti elettrici separati, mette a disposizione del cliente una maggiore flessibilità consentendogli di scegliere tra diverse combinazioni. Questa ulteriore flessibilità permette ai distributori di ridurre maggiormente i livelli di stock mantenendo tuttavia lo stesso servizio. Parker dispone di un'esperienza senza pari anche nello sviluppo di prodotti personalizzati per soddisfare i più alti requisiti tecnici, ambientali, energetici e di servizio.

PARKER FCDE - GINEVRA - SVIZZERA

PARKER FCDE - MILANO - ITALIA

INDICE

INTRODUZIONE

Mercati e applicazioni 06
Gamma completa di valvole a solenoide 08
Un concetto modulare 10
Certificazione ATEX 12
I migliori standard 13
Come usare il catalogo 14
Come selezionare una valvola 16
Come effettuare un ordine 18
Come usare i gruppi elettrico 24

VALVOLE A DUE VIE

Valvole per aria lubrificata e non, gas neutri e liquidi 27
Valvole per acqua e liquidi neutri 79
Valvole anti colpo d'ariete 113
Valvole per acqua calda e vapore 125
Valvole per olio idraulico e liquidi neutri (fino a 100 bar) 141
Valvole con elevata resistenza alla corrosione (Acciaio inossidabile 303) 157
Valvole con elevata resistenza alla corrosione (Acciaio inossidabile 316L) 165
Valvole per bruciatori 177
Valvole di commutazione rapida 197
Valvole per distribuzione di bevande - Liquipure® 201

VALVOLE A TRE VIE

Valvole per aria lubrificata e non, gas neutri e liquidi 207
Valvole per olio idraulico e liquidi neutri (fino a 75 bar) 247
Valvole con elevata resistenza alla corrosione (Acciaio inossidabile 303) 251
Valvole per distribuzione di bevande - Liquipure® 257

VALVOLE A DUE E TRE VIE PER SETTORE TRASPORTO

Due vie 265
Tre vie 271

DISTRIBUTORI A CINQUE VIE PER APPLICAZIONI PNEUMATICHE

Distributori pneumatici a cinque vie (Montaggio tubo/sottobase) 275

DISTRIBUTORI PNEUMATICI A TRE E CINQUE VIE PER IL CONTROLLO DELL'AZIONAMENTO

Valvole pneumatiche a tre e cinque vie per il controllo dell'azionamento (Montaggio tubo) 301
Valvole pneumatiche a tre e cinque vie per il controllo dell'azionamento (NAMUR) 333
Valvole a tre e cinque vie in acciaio inossidabile 316L per il controllo dell'azionamento (Montaggio tubo e NAMUR) 375

REGOLATORI ELETTROPNEUMATICI DI PRESSIONE

Serie EPP4 - Gamme Base, Comfort e Comfort ATEX 407

BOBINE, HOUSING E COMPONENTI ELETTRICI

Introduzione 439
Bobine 441
Componenti elettrici a prova di esplosione 483
Housing 518
Accessori per bobine 522
Ambienti esplosivi 524
Tabella per barriere IS 534

INFORMAZIONI TECNICHE SULLE VALVOLE A SOLENOIDE

Informazioni tecniche sulle valvole a solenoide 537

APPENDICE

Tabella delle sottobasi per valvole 558
Tabella dei codici di tensione per bobine e componenti elettrici 564
Indice per riferimento bobina 568
Indice per gruppe bobine 570
Indice per codice di ordinazione 572
Indice delle valvole 574

MERCATI E APPLICAZIONI

Parker offre un'ampia gamma di prodotti specifici per i singoli mercati in modo da offrire ai clienti la soluzione migliore:

SOLUZIONI INDUSTRIALI E AUTOMAZIONE

- Compressori
- Soffiatura
- Tessile
- Regolazione della pressione

CONTROLLO DEL PROCESSO

- Azionamento valvole
- Oil & Gas
- On e Off-Shore
- Industria petrolchimica
- Industria farmaceutica

ALIMENTI E BEVANDE

- Macchine da caffè professionali
- Acqua frizzante
- Bibite analcoliche
- Distribuzione dell'acqua

TERMOIDRAULICO

- Distribuzione dell'acqua
- Sistemi di raffreddamento

SETTORE TRASPORTI

- Autocarri
- Treni
- Autobus e pullman
- Mezzi marini
- Mezzi militari
- Mezzi agricoli

LIFE SCIENCES

- Sterilizzatori/Autoclave
- Respirazione
- Purificazione dell'acqua
- Attrezzatura da tavolo

SISTEMI DI RISCALDAMENTO

- Bruciatori industriali
- Trasferimento di combustibile
- Trasferimento di gas

GAMMA COMPLETA DI VALVOLE A SOLENOIDE PER IL CONTROLLO DEI FLUIDI

VALVOLE A DUE VIE

- Per aria lubrificata o secca, gas neutri e liquidi
- Per acqua e liquidi neutri
- Anti colpo d'ariete
- Acqua calda e vapore
- Per olio idraulico e liquidi neutri (Max. 100 bar)
- Elevata resistenza alla corrosione
  (303 Acciaio inossidabile)
  (316L Acciaio inossidabile)
- Bruciatore
- Commutazione rapida
- Liquipure® per distribuzione di bevande

VALVOLE A TRE VIE

- Per aria a secco o lubrificata
- Per olio idraulico e liquidi neutri (Max. 75 bar)
- Elevata resistenza alla corrosione (303 Acciaio inossidabile)
- Liquipure® per la distribuzione di bevande

VALVOLE A DUE E TRE VIE PER SETTORE TRASPORTI

- A due vie - diretta e pilotata
- A tre vie - ad azionamento diretto

DISTRIBUTORI A CINQUE VIE PER APPLICAZIONI PNEUMATICHE

- Montaggio tubo/sottobase

DISTRIBUTORI PNEUMATICI A TRE E CINQUE VIE PER IL CONTROLLO DEGLI ATTUATORI PNEUMATICI

- Montaggio tubo
- Interfaccia NAMUR
- Acciaio inossidabile 316L
  (Montaggio tubo e con interfaccia NAMUR)

BOBINE E COMPONENTI ELETTRICI

- Bobine
- Alloggiamenti
- Componenti elettrici a prova di esplosione

REGOLATORI ELETTROPNEUMATICI DI PRESSIONE DELLA SERIE EPP4

- Di base
- Comfort
- Comfort ATEX

UN CONCETTO MODULARE PER TUTTE LE APPLICAZIONI

POSSIBILITÀ DI SCELTA TRA:

Modalità di azionamento

- Azionamento diretto
- Azione mista
- Pilotate
- Comando Manuale
- Azionamento esterno

Tipi di materiali

- Ottone
- Acciaio inossidabile 303
- Acciaio inossidabile 316L
- Alluminio anodizzato
- Lega di zinco
- POM

Soluzioni per il montaggio

- Tubo
- Sottobase
- NAMUR
- Banjo
- CETOP
- ISO

Funzioni di controllo

- Chiusura normale
- Apertura normale
- Universal
- Controllo con impulso elettrico
- Solenoide
- PWM

Progettazione interna

- Pistone
- Otturatore
- Membrana
- Lente

Tenute

- FKM
- NBR
- EPDM
- Ruby
- PUR
- PCTFE…

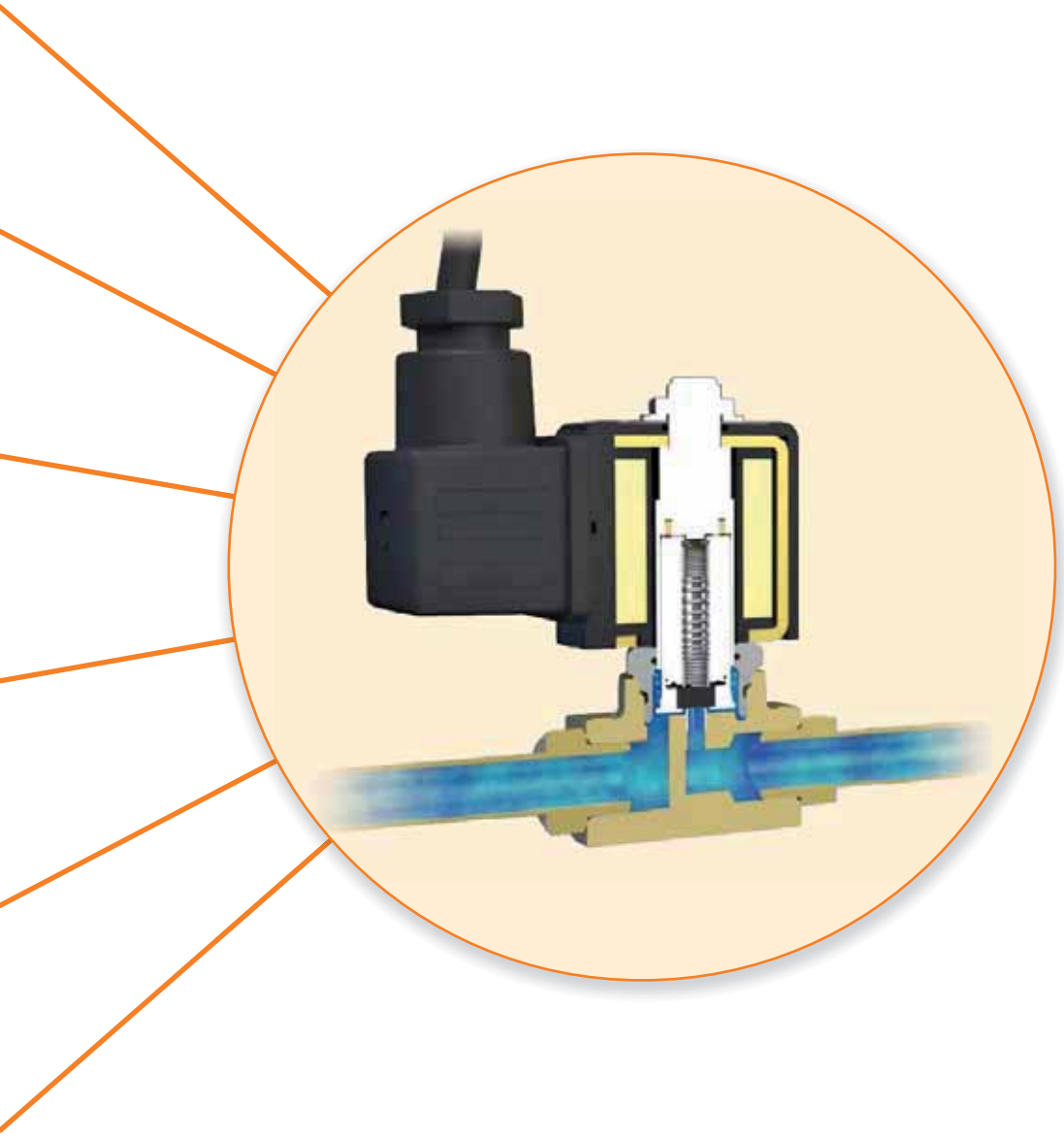

CERTIFICAZIONE ATEX PER COMPONENTI ELETTRICI

Selezione di componenti elettrici FCDE realizzati per ambienti a rischio di esplosione e conformi ai termini della direttiva 94/9/CE - zone 0/20, 1/21 e 2/22.

Nella sezione relativa alle bobine, il logo ATEX indica che la bobina è approvata sulla base della certificazione ATEX.

CERTIFICAZIONE ATEX PER COMPONENTI MECCANICI

Selezione di componenti meccanici FCDE conformi ai termini della direttiva 94/9/CE relativi alle apparecchiature non elettriche per l'utilizzo in ambienti potenzialmente esplosivi - zone 0/20, 1/21 e 2/22.

Le gamme NAMUR e valvole per tubi includono un contrassegno che indica l'approvazione per componenti meccanici ATEX.

Nella sezione relativa alle valvole, il logo ATEX indica che la valvola è approvata sulla base della certificazione ATEX.

CERTIFICAZIONE PER VALVOLE A SOLENOIDE

Se i componenti elettrici e meccanici sono approvati sulla base della certificazione ATEX, la valvola a solenoide può essere utilizzata in atmosfere a rischio di esplosione.

La valvola a solenoide viene assemblata e sottoposta a test prima dell'invio.

STANDARD DI QUALITÀ:

- ISO 9001
- ISO 14001
- ISO TS 16949

CERTIFICATI E OMOLOGAZIONI:

I nostri prodotti sono stati approvati e soddisfano i requisiti pertinenti al mercato, compresi i seguenti:

- CE
- ATEX
- RoHS
- UL
- Reach
- IECEx
- CSA
- Gost
- SVGW
- DIN
- AGA
- TUV
- Kosha
- IMQ
- NSF
- VDE

COME USARE IL CATALOGO

Questo catalogo comprende un elenco completo dei prodotti Parker FCDE. Consente di identificare le valvole e le bobine più indicate e permette di creare numeri per gli ordini.

Il catalogo è diviso in base a famiglie di prodotti. All'inizio di ciascuna sezione delle valvole è disponibile una descrizione. Per agevolare la comprensione, ciascuna sezione è divisa in base all'applicazione.

Nella prima pagina di ciascuna sezione Applicazione, è disponibile una presentazione dei prodotti descritti comprensiva delle caratteristiche tecniche per individuare la pagina corretta (come nell'esempio):

PAGINA DELLA SEZIONE CON DESCRIZIONE

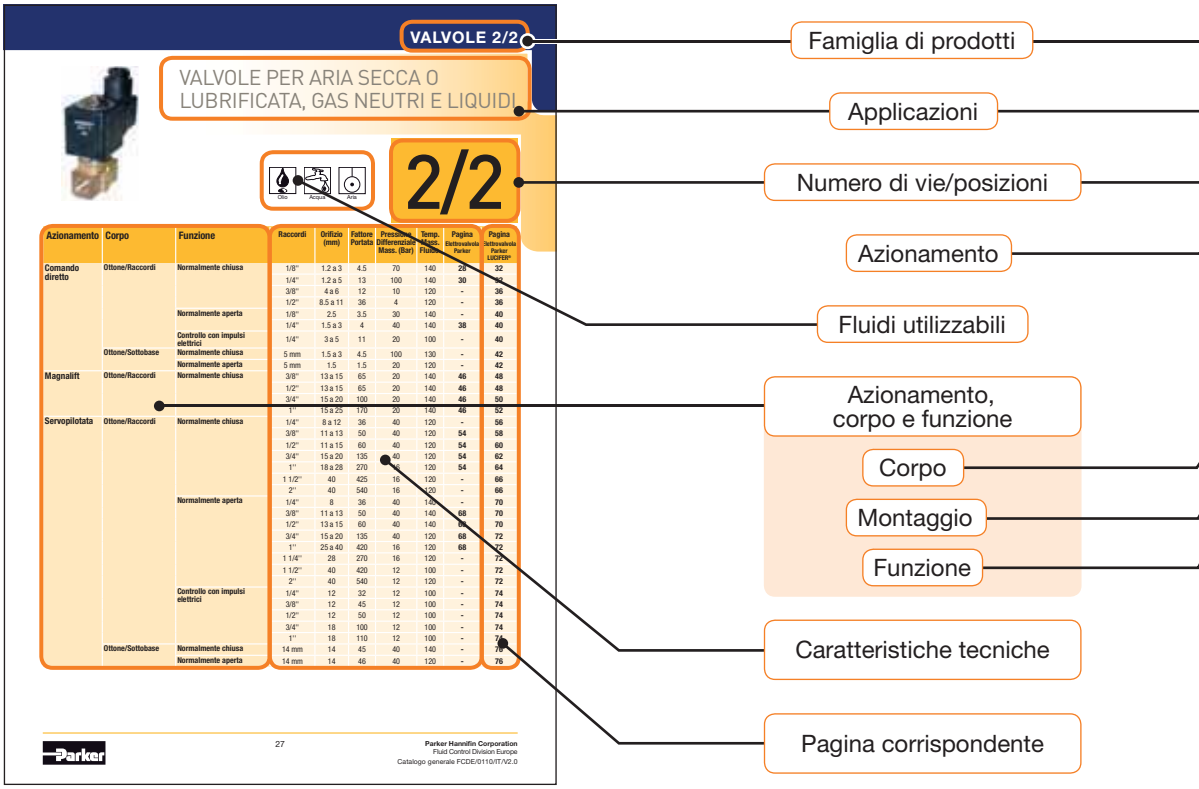

Azionamento	Corpo	Funzione	Raccordi	Orifizio (mm)	Fattore Portata	Pressione Differenziale Mass. (Bar)	Temp. Mass. Fluido	Pagina Elettrovalvola Parker	Pagina Elettrovalvola Parker LUCIFER®
Comando diretto	Ottone/Raccordi	Normalmente chiusa	1/8"	1.2 a 3	4.5	70	140	28	32
			1/4"	1.2 a 5	13	100	140	30	32
			3/8"	4 a 6	12	10	120	-	36
			1/2"	8.5 a 11	36	4	120	-	36
		Normalmente aperta	1/8"	2.5	3.5	30	140	-	40
			1/4"	1.5 a 3	4	40	140	38	40
		Controllo con impulsi elettrici	1/4"	3 a 5	11	20	100	-	40
	Ottone/Sottobase	Normalmente chiusa	5 mm	1.5 a 3	4.5	100	130	-	42
		Normalmente aperta	5 mm	1.5	1.5	20	120	-	42
Magnalift	Ottone/Raccordi	Normalmente chiusa	3/8"	13 a 15	65	20	140	46	48
			1/2"	13 a 15	65	20	140	46	48
			3/4"	15 a 20	100	20	140	46	50
			1"	15 a 25	170	20	140	46	52
Servopilotata	Ottone/Raccordi	Normalmente chiusa	1/4"	8 a 12	36	40	120	-	56
			3/8"	11 a 13	50	40	120	54	58
			1/2"	11 a 15	60	40	120	54	60
			3/4"	15 a 20	135	40	120	54	62
			1"	18 a 28	270	40	120	54	64
			1 1/2"	40	425	16	120	-	66
			2"	40	540	16	120	-	66
		Normalmente aperta	1/4"	8	36	40	140	-	70
			3/8"	11 a 13	50	40	140	68	70
			1/2"	13 a 15	60	40	140	68	70
			3/4"	15 a 20	135	40	120	68	72
			1"	25 a 40	420	16	120	68	72
			1 1/4"	28	270	16	120	-	72
			1 1/2"	40	420	12	100	-	72
			2"	40	540	12	120	-	72
		Controllo con impulsi elettrici	1/4"	12	32	12	100	-	74
			3/8"	12	45	12	100	-	74
			1/2"	12	50	12	100	-	74
			3/4"	18	100	12	100	-	74
			1"	18	110	12	100	-	74
	Ottone/Sottobase	Normalmente chiusa	14 mm	14	45	40	140	-	76
		Normalmente aperta	14 mm	14	46	40	120	-	76

Per ulteriori informazioni tecniche su azionamento, corpo e funzione, consultare la sezione delle informazioni tecniche al termine del catalogo.

Mercati di applicazione per questa categoria di valvole

Omologazioni **pertinenti** all'interno della pagina

Tabella di selezione rapida con valore Min/Max per le valvole della pagina

PAGINA SEZIONE PRODOTTI

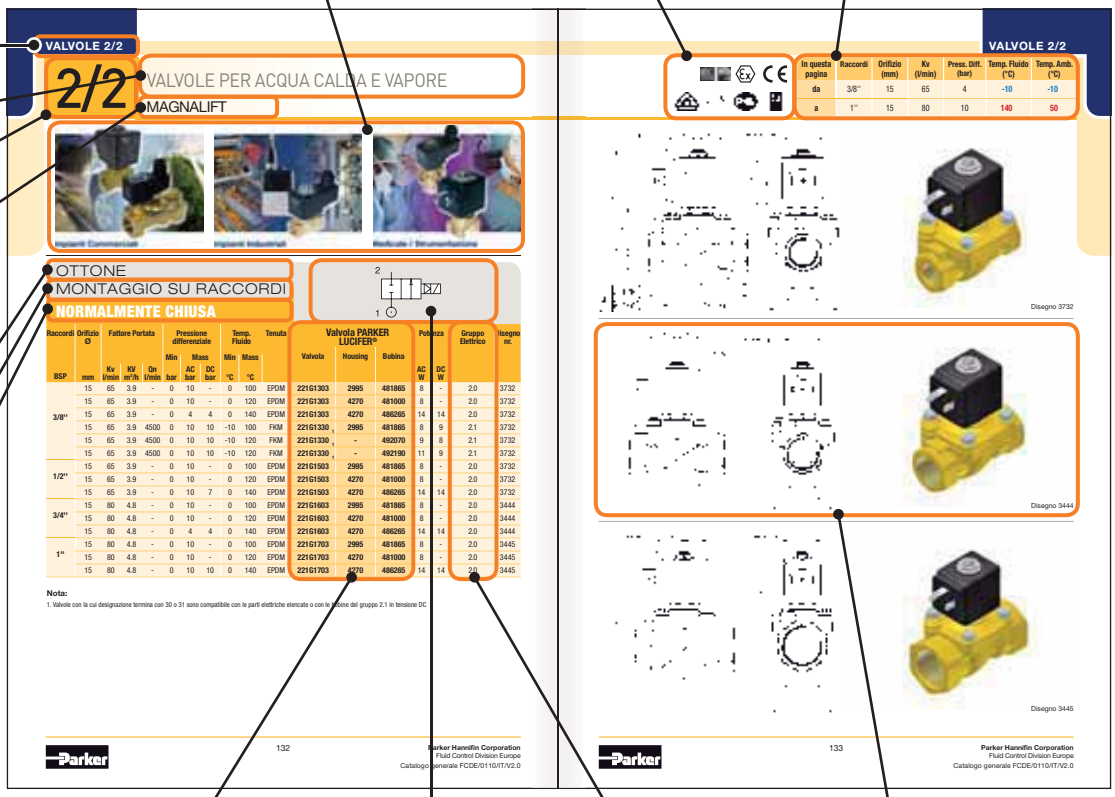

VALVOLE 2/2

2/2 VALVOLE PER ACQUA CALDA E VAPORE

MAGNALIFT

OTTONE

MONTAGGIO SU RACCORDI

NORMALMENTE CHIUSA

Raccordi BSP	Orifizio Ø mm	Fattore Portata Kv l/min	KV m³/h	Qn l/min	Pressione differenziale Min bar	Mass AC bar	Mass DC bar	Temp. Fluido Min °C	Mass °C	Tenuta	Valvola PARKER LUCIFER® Valvola	Housing	Bobina	Potenza AC W	DC W	Gruppo Elettrico	Disegno nr.
3/8"	15	65	3.9	-	0	10	-	0	100	EPDM	221G1303	2995	481865	8	-	2.0	3732
	15	65	3.9	-	0	10	-	0	120	EPDM	221G1303	4270	481000	8	-	2.0	3732
	15	65	3.9	-	0	4	4	0	140	EPDM	221G1303	4270	486265	14	14	2.0	3732
	15	65	3.9	4500	0	10	10	-10	100	FKM	221G1330	2995	481865	8	9	2.1	3732
	15	65	3.9	4500	0	10	10	-10	120	FKM	221G1330	-	492070	9	8	2.1	3732
	15	65	3.9	4500	0	10	10	-10	120	FKM	221G1330	-	492190	11	9	2.1	3732
1/2"	15	65	3.9	-	0	10	-	0	100	EPDM	221G1503	2995	481865	8	-	2.0	3732
	15	65	3.9	-	0	10	-	0	120	EPDM	221G1503	4270	481000	8	-	2.0	3732
	15	65	3.9	-	0	10	7	0	140	EPDM	221G1503	4270	486265	14	14	2.0	3732
3/4"	15	80	4.8	-	0	10	-	0	100	EPDM	221G1603	2995	481865	8	-	2.0	3444
	15	80	4.8	-	0	10	-	0	120	EPDM	221G1603	4270	481000	8	-	2.0	3444
	15	80	4.8	-	0	4	4	0	140	EPDM	221G1603	4270	486265	14	14	2.0	3444
1"	15	80	4.8	-	0	10	-	0	100	EPDM	221G1703	2995	481865	8	-	2.0	3445
	15	80	4.8	-	0	10	-	0	120	EPDM	221G1703	4270	481000	8	-	2.0	3445
	15	80	4.8	-	0	10	10	0	140	EPDM	221G1703	4270	486265	14	14	2.0	3445

Nota:
1. Valvole con la cui designazione termina con 30 o 31 sono compatibile con le parti elettriche elencate o con le bobine del gruppo 2.1 in tensione DC

132 Parker Hannifin Corporation Fluid Control Division Europe Catalogo generale FCDE/0110/IT/V2.0

VALVOLE 2/2

In questa pagina	Raccordi	Orifizio (mm)	Kv (l/min)	Press. Diff. (bar)	Temp. Fluido (°C)	Temp. Amb. (°C)
da	3/8"	15	65	4	-10	-10
a	1"	15	80	10	140	50

Disegno 3732

Disegno 3444

Disegno 3445

133 Parker Hannifin Corporation Fluid Control Division Europe Catalogo generale FCDE/0110/IT/V2.0

Informazioni sull'ordine

ISO Simbolo

Gruppi di bobine compatibili con la valvola selezionata.

Disegni in 2D* e 3D con dimensioni

* Il disegno in 2D corrisponde sempre alla bobina standard.

COME SELEZIONARE UNA VALVOLA

Per prima cosa, selezionare la famiglia 1 e l'applicazione 2.

La tabella è stata creata per agevolare l'individuazione dei prodotti in base ai criteri.

Decidere prima l'utilizzo 3, quindi spostarsi sulla tabella per selezionare il materiale del corpo 4, la funzione 5 e i requisiti tecnici 6.

Una volta trovati i prodotti che rispondono alle specifiche, andare alla pagina corrispondente indicata nell'ultima colonna 7, dove sono disponibili i prodotti che soddisfano i criteri.

1 SELEZIONE FAMIGLIA DI PRODOTTI

2 SELEZIONE APPLICAZIONE

3 SELEZIONE AZIONAMENTO

4 SELEZIONE CORPO

5 SELEZIONE FUNZIONE

6 SELEZIONE SPECIFICHE TECNICHE

7 SELEZIONARE PAGINA CORRISPONDENTE

1

VALVOLE 2/2

VALVOLE PER ARIA SECCA O LUBRIFICATA, GAS NEUTRI E LIQUIDI

2

Olio Acqua Aria

2/2

Azionamento	Corpo	Funzione	Raccordi	Orifizio (mm)	Fattore Portata	Pressione Differenziale Mass. (Bar)	Temp. Mass. Fluido.	Pagina Elettrovalvola Parker	Pagina Elettrovalvola Parker LUCIFER®
Comando diretto	Ottone/Raccordi	Normalmente chiusa	1/8''	1.2 a 3	4.5	70	140	28	32
			1/4''	1.2 a 5	13	100	140	30	32
			3/8''	4 a 6	12	10	120	-	36
			1/2''	8.5 a 11	36	4	120	-	36
		Normalmente aperta	1/8''	2.5	3.5	30	140	-	40
			1/4''	1.5 a 3	4	40	140	38	40
		Controllo con impulsi elettrici	1/4''	3 a 5	11	20	100	-	40
	Ottone/Sottobase	Normalmente chiusa	5 mm	1.5 a 3	4.5	100	130	-	42
		Normalmente aperta	5 mm	1.5	1.5	20	120	-	42
Magnalift	Ottone/Raccordi	Normalmente chiusa	3/8''	13 a 15	65	20	140	46	48
			1/2''	13 a 15	65	20	140	46	48
			3/4''	15 a 20	100	20	140	46	50
			1''	15 a 25	170	20	140	46	[illegible]
Sc[illegible]	Ottor[illegible]	Normalm[illegible]	1/4''	8 a 12	[illegible]	[illegible]	120	-	[illegible]
			3/8''	11 a 13	[illegible]	[illegible]	120	54	[illegible]
			1/2''	11 a 15	[illegible]	40	120	54	[illegible]
			3/4''	15 a 20	135	40	120	54	62
			1''	18 a 28	270	16	120	54	64
			1 1/2''	40	425	16	120	-	66
			2''	40	540	16	120	-	66
		Normalmente aperta	1/4''	8	36	40	140	-	70
			3/8''	11 a 13	50	40	140	68	70
			1/2''	13 a 15	60	40	140	68	70
			3/4''	15 a 20	135	40	120	68	72
			1''	25 a 40	420	16	120	68	72
			1 1/4''	28	270	16	120	-	72
			1 1/2''	40	420	12	100	-	72
			2''	40	540	12	120	-	72
		Controllo con impulsi elettrici	1/4''	12	32	12	100	-	74
			3/8''	12	45	12	100	-	74
			1/2''	12	50	12	100	-	74
			3/4''	18	100	12	100	-	74
			1''	18	110	12	100	-	74
	Ottone/Sottobase	Normalmente chiusa	14 mm	14	45	40	140	-	76
		Normalmente aperta	14 mm	14	46	40	120	-	76

3 4 5 6 7

DUE GAMME DI PRODOTTI

7 SELEZIONARE PAGIN

Parker [Tabella blu]

VALVOLE 2/2

2/2 VALVOLE PER ARIA SECCA O LUBRIFICATA, GAS NEUTRI E LIQUIDI
COMANDO DIRETTO

OTTONE
MONTAGGIO SU RACCORDI
NORMALMENTE CHIUSA

Raccordi	Orifizio Ø	Fattore portata			Pressione differenziale			Temp. Fluido		Tenuta	Valvola PARKER			Potenza		Gruppo Electrico	Disegno nr.
					Min	Mass		Min	Mass								
BSP	mm	Kv l/min	KV m³/h	Qn m³/h	bar	AC bar	DC bar	°C	°C		Codice di Ordinazione	Modello valvola	Modello bobina	AC W	DC W		
1/8"	2.5	3.3	0.197	-	0	-	5	-10	140	FKM	363380	PM146FV	ZB12	-	12	20.1/20.2	034
	3	4.5	0.27	-	0	7	-	-10	140	FKM	363390	PM146HV	ZB09	9	-	20.1/20.2	034
	3	4.5	0.27	-	0	-	2	-10	140	FKM	363390	PM146HV	ZB12	-	12	20.1/20.2	034
	2.5	2.2	0.13	-	0	10	-	-10	140	FKM	398006	N74.4WV	WB4.5 230/50-60	4.5	-	1.3	065
	2.5	2.2	0.13	-	0	10	-	-10	140	FKM	398007	N74.4WV	WB4.5 24/50-60	4.5	-	1.3	065
	2.5	2.2	0.13	-	0	-	4	-10	140	FKM	398008	N74.4WV	WB5.0 12DC	-	5	1.3	065
	2.5	2.2	0.13	-	0	-	4	-10	140	FKM	398010	N74.4WV	WB5.0 24DC	-	5	1.3	065
	2.5	2.2	0.13	-	0	10											

- Progettato per applicazioni di automazione industriale
- Applicazioni ATEX solo per i prodotti specificati

Da ordinare:
Valvola + Bobina

Da ordinare separatamente

1 VALVOLA

2 BOBINA

Esempio di ordine di un corpo valvola:
363380

Esempio di ordine di una bobina:
304002

Per ulteriori informazioni, andare a pagina 20:
Come effettuare un ordine dl Valvole Parker

ATTENZIONE: per le valvole serie N74, N79, 131.4, 131, 175, 180, 161, il numero di ordine della valvola indica la valvola assemblata **e** la bobina con indicata la tensione.

IMPORTANT: For assembled solenoid valves, please consult your local sales office.

NA CORRISPONDENTE

Parker Lucifer® [Tabella arancione]

VALVOLE 2/2

2/2 VALVOLE PER ARIA SECCA O LUBRIFICATA, GAS NEUTRI E LIQUIDI
COMANDO DIRETTO

OTTONE
MONTAGGIO SU RACCORDI
NORMALMENTE CHIUSA

Raccordi	Orifizio Ø	Fattore Portata			Max. Pressione differenziale			Temp. Fluido		Tenuta	Valvola PARKER LUCIFER®			Potenza		Gruppo Elettrico	Disegno nr.
					Min	Mass		Min	Mass								
BSP	mm	Kv l/min	KV m³/h	Qn l/min	bar	AC bar	DC bar	°C	°C		Valvola	Housing	Bobina	AC W	DC W		
3/8"	4	7.5	0.45	480	0	10	4	-10	100	FKM	121K3206	2995	481865	8	9	2.0	3551
	4	7.5	0.45	480	0	10	5	-10	120	FKM	121K3206	4270	481000	8	8	2.0	3551
	4	7.5	0.45	480	0	10	10	-10	120	FKM	121K3206	4270	486265	14	14	2.0	3551
	5	11	0.66	750	0	7	2	-10	100	FKM	121K3106	2995	481865	8	9	2.0	3551
	5	11	0.66	750	0	7	2.8	-10	120	FKM	121K3106	4270	481000	8	8	2.0	3551
	5	11	0.66	750	0	7	5	-10	120	FKM	121K3106	4270	486265	14	14	2.0	3551
	6	12	0.72	1100	0	5	1.1	-10	100	FKM	121K3306	2995	481865	8	9	2.0/14.2	3551
	6	12	0.72	1100	0	5	1.5	-10	120	FKM	121K3306	4270	481000	8	8	2.0/14.2	3551
	6	12	0.72	1100	0	5	3	-10	120	FKM	121K3306	4270	486265	14	14	[illegible]	[illegible]

- Grazie alla struttura modulare dei nostri prodotti, una vasta gamma di componenti elettrici possono essere utilizzati tra cui ATEX, IECEx, IP67, classe H, potenza ridotta, UL/VDE
- Per le applicazioni esigenti in termini di affidabilità , prestazioni e qualità
- Per l'utilizzo di materiali di alta qualità

Da ordinare:
Valvola + Housing + Bobina

Un ordine

1. **VALVOLA**
2. **HOUSING**
3. **BOBINA**

Esempio di ordine di valvola e bobina:

1	-	2	-	3
121K3206	-	2995	-	481865A2
Valvola		Housing		Bobina e codice di tensione

Per ulteriori informazioni, andare a pagina 22:
Come effettuare un ordine di Valvole a solenoide Parker Lucifer®

LE VALVOLE A SOLENOIDE PARKER SONO COMPOSTE DA DUE ELEMENTI:

La valvola (1) e la bobina (2)

(1) Utilizzare il numero di ordine della valvola (6 numeri) per ordinare la valvola.

Codice di Ordinazione

363380
363390
363390

Esempio di codice di ordinazione per le valvole:

363380

Per ciascuna valvola, vengono suggeriti diversi tipi di bobine.

La valvola selezionata è compatibile anche con tutte le altre bobine dello stesso gruppo, consentendo una scelta più ampia.

VALVOLE 2/2

2/2 VALVOLE PER ARIA SECCA O LUBRIFICATA, GAS NEUTRI E LIQUIDI
COMANDO DIRETTO

OTTONE
MONTAGGIO SU RACCORDI
NORMALMENTE CHIUSA

Raccordi	Orifizio Ø	Fattore portata			Pressione differenziale			Temp. Fluido		Tenuta	Valvola PARKER			Potenza		Gruppo Electtrico	Disegno nr.
		Kv l/'	KV m³/h	Qn m³/h	Min bar	Mass AC bar	Mass DC bar	Min °C	Mass °C		Codice di Ordinazione	Modello valvola	Modello bobina	AC W	DC W		
BSP																	
1/8''	2.5	3.3	0.18	-	0	-	5	-10	140	FKM	363380	PM146FV	ZB12	-	12	20.1/20.2	034
	3	4.5	0.27	-	0	-	-	-10	140	FKM	363390	PM146HV	ZB09	9	-	20.1/20.2	034
	3	4.5	0.27	-	0	-	2	-10	140	FKM	363390	PM146HV	ZB12	-	12	20.1/20.2	034
1/4''	2.5	2.2	0.13	-	0	10	-	-10	140	FKM	398006 1	N74.4WV	WB4.5 230/50-60	4.5	-	1.3	065
	2.5	2.2	0.13	-	0	10	-	-10	140	FKM	398007 1	N74.4WV	WB4.5 24/50-60	4.5	-	1.3	065
	2.5	2.2	0.13	-	0	-	4	-10	140	FKM	398008 1	N74.4WV	WB5.0 12DC	-	5	1.3	065
	2.5	2.2	0.13	-	0	-	4	-10	140	FKM	398010 1	N74.4WV	WB5.0 24DC	-	5	1.3	065
	2.5	2.2	0.13	-	0	19	-	-10	140	FKM	398012 1	N74.4WV	WB8.0 230/50-60	8	-	1.3	065
	3	4.5	0.27	-	0	7	-	-10	140	FKM	363444	PM146YV	ZB09	9	-	20.1/20.2	035
	3	4.5	0.27	-	0	-	2	-10	140	FKM	363444	PM146YV	ZB12	-	12	20.1/20.2	035
	4.5	9	0.53	-	0	6	-	-10	140	FKM	363457	PM146.3KV	ZB14	14	-	20.2	035
	4.5	9	0.53	-	0	-	2.5	-10	140	FKM	363457	PM146.3KV	ZB16	-	16	20.2	035
	6	13	0.75	-	0	6	-	-10	140	FKM	363467	PM146.3ABV	ZB14	14	-	20.2	035
	6	13	0.75	-	0	-	1	-10	140	FKM	363467	PM146.3ABV	ZB16	-	16	20.2	035

Nota:
1. Codice di ordinazione legato a una valvola completa di bobina, con il voltaggio indicato.

30

Parker Hannifin Corporation
Fluid Control Division Europe
Catalogo generale FCDE/0110/IT/V2.0

2 **Per ordinare le bobine, usare il numero di ordine (6 numeri)**

Scegliere la bobina e usare il numero di ordine di 6 numeri per effettuare l'ordine.

V CA/Hz	Codice ordine
ZB09 24/50-60	304004
ZB09 12/50-60	304002
ZB09 230/50-60	304012

Esempio di codice di ordinazione per le bobine:

304002

BOBINE

GRUPPO BOBINE

20.1

BOBINE PER COLLEGAMENTO CON CONNETTORE DIN

BOBINE SERIE ZB

Queste bobine possono essere montate con tutte le valvole a solenoide Parker che corrispondono al gruppo di bobine indicato.
Vedere la colonna "Gruppo bobine" nelle pagine delle valvole.

Queste bobine vengono realizzate con fili di rame di classe H e stampate in poliestere termoplastico con il 30% di fibra di vetro.
Grado di protezione: IP65 secondo EN 175301-803:2006-A. Connettore a tre poli.

Queste bobine sono conformi agli standard di sicurezza IEC/CENELEC e alla direttiva europea sulla bassa tensione.

Per versione riconosciuta da UL: file UL MH19410.

Il connettore DIN deve essere ordinato separatamente (vedere la sezione Accessori per bobine).

Specifica			Standard	Certificata UL
Riferimento (senza connettore DIN)			ZB09/ZB12	ZB09 solo per CA
Gruppo bobine			20.1	
Grado di protezione			**IP65** secondo gli standard IEC/EN 60529 (con connettore DIN e guarnizione)	
Classe di isolamento			F 155°C	
Collegamento elettrico			La bobina viene collegata con un connettore 2P+T secondo EN 175301-803 tipo A.	
Temperatura ambiente			Da -10°C a +50°C L'applicazione è limitata anche dall'intervallo di temperatura della valvola.	
Assorbimento	CC	P (freddo) 20°C	12 W	
	CA	P (freddo) 20°C	9 W	
		Attrazione (freddo)	25 VA	
Peso			130 g	

Tensioni "Vn"	V CA/Hz	Codice ordine	V CC	Codice ordine	V CA/Hz	Codice ordine
Dal -10% al +10% della Vn per CA Dal -5% al +10% della Vn per CC	ZB09 24/50-60	**304004**	ZB12 12 CC	**304018**	ZB09 24/60	**304048**
	ZB09 12/50-60	**304002**	ZB12 24 CC	**304020**	ZB09 110-120/60	**304011**
	ZB09 230/50-60	**304012**	ZB12 110 CC	**304022**	ZB09 208-240/60	**304051**
	ZB09 115/50-60	**304010**	ZB12 48 V CC	**304021**		
	ZB09 100/50-60	**304009**				
	ZB09 240/50-60	**304014**				
	ZB09 48/50-60	**304008**				
	ZB09 110-120/60	**304011**				
	ZB09 380/50-60	**304016**				

Per ordinare una bobina, utilizzare il numero di ordine a 6 cifre. **Esempio di codice:** ZB09 24/50-60 = **304004**
Altre tensioni sono disponibili nella tabella dei codici di tensione alla fine della sezione delle bobine.

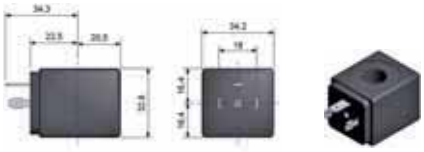

460

Parker Hannifin Corporation
Fluid Control Division Europe
Catalogo generale FCDE/0110/IT/V2.0

La sezione Bobine si trova al termine del catalogo

IMPORTANTE: Per gli assiemi elettrovalvole, grazie di consultare il distributore locale.

COME EFFETTUARE UN ORDINE VALVOLE A SOLENOIDE PARKER LUCIFER®

UNA VALVOLA A SOLENOIDE PARKER LUCIFER® È COMPOSTA DA TRE ELEMENTI:

Valvola (1) + Housing (2) + Bobina (3).

1. Scegliere la valvola
2. Scegliere l'housing
3. Scegliere la bobina

(1) Scegliere il modello della valvola.

Valvola
121K3206
121K3206
121K3206

(2) Selezionare l'housing in base al livello di protezione (da IP 44 a IP 67 nella sezione delle bobine)

Housing
2995
4270
4270

VALVOLE 2/2

2/2 VALVOLE PER ARIA SECCA O LUBRIFICATA, GAS NEUTRI E LIQUIDI
COMANDO DIRETTO

OTTONE
MONTAGGIO SU RACCORDI
NORMALMENTE CHIUSA

Raccordi	Orifizio Ø	Fattore Portata			Max. Pressione differenziale			Temp. Fluido		Tenuta	Valvola PARKER LUCIFER®			Potenza		Gruppo Elettrico	Disegno nr.
					Min	Mass		Min	Mass								
BSP	mm	Kv l/min	KV m³/h	Qn l/min	bar	AC bar	DC bar	°C	°C		Valvola	Housing	Bobina	AC W	DC W		
3/8"	4	7.5	0.45	480	0	10	4	-10	100	FKM	121K3206	2995	481865	8	9	2.0	3551
	4	7.5	0.45	480	0	10	5	-10	120	FKM	121K3206	4270	481000	8	8	2.0	3551
	4	7.5	0.45	480	0	10	10	-10	120	FKM	121K3206	4270	486265	14	14	2.0	3551
	5	11	0.66	750	0	7	2	-10	100	FKM	121K3106	2995	481865	8	9	2.0	3551
	5	11	0.66	750	0	[illegible]	2.8	-10	120	FKM	121K3106	4270	481000	8	8	2.0	3551
	5	11	0.66	750	0	7	5	-10	120	FKM	121K3106	4270	486265	14	14	2.0	3551
	6	12	0.72	1100	0	5	1.1	-10	100	FKM	121K3306	2995	481865	8	9	2.0/14.2	3551
	6	12	0.72	1100	0	5	1.5	-10	120	FKM	121K3306	4270	481000	8	8	2.0/14.2	3551
	6	12	0.72	1100	0	5	3	-10	120	FKM	121K3306	4270	486265	14	14	2.0/14.2	3551
1/2"	8.5	25	1.5	1600	0	1.1	0.5	-10	100	FKM	E121K46	2995	481865	8	9	2.0	3427
	8.5	25	1.5	1600	0	2.2	0.5	-10	120	FKM	E121K46	4270	481000	8	8	2.0	3427
	8.5	25	1.5	1600	0	4	1.2	-10	120	FKM	E121K46	4270	486265	14	14	2.0	3427
	11	36	2.16	2500	0	0.7	0.3	-10	100	FKM	E121K45	2995	481865	8	9	2.0	3427
	11	36	2.16	2500	0	1.2	0.35	-10	120	FKM	E121K45	4270	481000	8	8	2.0	3427
	11	36	2.16	2500	0	2.5	0.7	-10	120	FKM	E121K45	4270	486265	14	14	2.0	3427

36

Parker Hannifin Corporation
Fluid Control Division Europe
Catalogo generale FCDE/0110/IT/V2.0

Per ogni valvola vengono suggeriti diversi tipi di bobine.

La valvola selezionata è compatibile anche con tutte le altre bobine dello stesso gruppo, consentendo una scelta più ampia.

Le bobine Parker Lucifer® sono disponibili in molti livelli di tensione diversi.
Scegliere il livello desiderato inserendo il codice di tensione al termine del numero dell'ordine.

3 Scegliere la bobina e il codice di tensione.

Codice bobina.

481865

Codice di tensione

V CA/Hz	Codice Tensione
24/50	A2
48/50	A4
110/50	A5
220-230/50	3D

Esempio di ordine di valvola e bobina:

1 - 2 - 3

121K3206 - 2995 - 481865A2

Codice valvola — Housing — Bobina e codice di tensione

BOBINE

GRUPPO BOBINE

2.0/2.1 BOBINE PER COLLEGAMENTO CON CONNETTORE DIN

BOBINE, 32 mm

Queste bobine possono essere montate con tutte le valvole a solenoide Parker che corrispondono al gruppo di bobine indicato.
Vedere la colonna "Gruppo bobine" nelle pagine delle valvole.
Il gruppo incapsulato è composto da una bobina, un circuito ferromagnetico e un collegamento tipo faston.

L'incapsulamento in materiale sintetico fornisce un alloggiamento compatto efficace, che offre una protezione totale da polvere, olio, acqua e così via.
Facili da montare in spazi ristretti, queste bobine forniscono una protezione antiurto e anticorrosione e semplificano l'adeguamento dell'apparecchiatura esistente ad altri requisiti, ecc.
Queste bobine sono conformi agli standard di sicurezza IEC/CENELEC e alla direttiva europea sulla bassa tensione.

Specifica			Standard	Doppia frequenza
Rif. (senza connettore DIN) Rif. (con connettore DIN)			481865 482725	483510 482635
Gruppo bobine			2.0/2.1	
Grado di protezione			**IP65** secondo gli standard IEC/EN 60529 (con spina DIN)	
Classe di isolamento			F 155°C	
Collegamento elettrico			La bobina viene collegata con un connettore 2P+T secondo EN 175301-803 tipo A.	
Temperatura ambiente			Da -40°C a +50°C L'applicazione è limitata anche dall'intervallo di temperatura della valvola.	
Assorbimento	CC	Pn (caldo)	9 W	
		P (freddo) 20°C	12 W	-
	CA	Pn (mantenimento)	8 W	9 W
		Attrazione (freddo)	26 VA (9 W)	32 VA (10 W)
Peso			130 g (senza connettore)	

Tensioni "Vn"

	V CA/Hz	Codice Tensione	V CC	Codice tensione	V CA/Hz	Codice Tensione
Dal -10% al +10% della Vn	24/50 48/50 110/50 220-230/50	A2 A4 A5 3D	24 48 110	C2 C4 C5	24/50, 24/60 48/50, 48/60 110-115/50, 120/60 220-240/50, 240/60	P0 S4 S5 S6

Per ordinare una bobina, utilizzare il riferimento e il codice di tensione, ad esempio: 481865 per 24 V CC = **481865C2**
Altre tensioni sono disponibili nella tabella dei codici di tensione alla fine della sezione delle bobine.

Queste bobine devono essere utilizzate con gli housing appropriati. Di seguito è riportato un esempio.

Il kit di assemblaggio per bobine **Rif. 2995** corrisponde all'"housing" del sistema di numerazione delle valvole Lucifer® (valvola - housing - bobina - tensione).
È composto da una targa su cui sono riportati i dettagli del tipo di valvola, una rondella rotonda e un dado per fissare la bobina da 32 mm alla valvola.

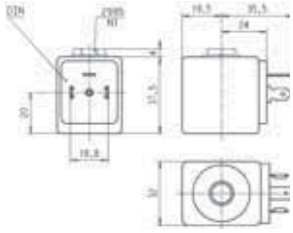

446

Parker Hannifin Corporation
Fluid Control Division Europe
Catalogo generale FCDE/0110/IT/V2.0

Importante:
È possibile ordinare valvole, housing e bobine separatamente come elementi sostitutivi o di ricambio.

COME USARE I GRUPPI ELETTRICO

ALL'INTERNO DI UNA PAGINA RELATIVA ALLE VALVOLE

Uno dei punti di forza di Parker è la modularità, adattabilità e flessibilità dei prodotti.
Le bobine indicate nella tabella per le valvole a solenoide selezionate sono state scelte perché soddisfano la maggior parte dei requisiti di utilizzo.

Valvola PARKER LUCIFER®		
Valvola	**Housing**	**Bobina**
121K3206	2995	481865
121K3206	4270	481000
121K3206	4270	486265

In alcuni casi, potrebbero essere necessarie caratteristiche speciali per le quali è più opportuno scegliere un'altra bobina.

I gruppi sono stati creati per agevolare la selezione di una bobina compatibile con la valvola scelta.

Gruppo Elettrico
2.0
2.0
2.0

VALVOLE 2/2

2/2 VALVOLE PER ARIA SECCA O LUBRIFICATA, GAS NEUTRI E LIQUIDI
COMANDO DIRETTO

OTTONE
MONTAGGIO SU RACCORDI
NORMALMENTE CHIUSA

Raccordi	Orifizio Ø	Fattore Portata			Max. Pressione differenziale			Temp. Fluido		Tenuta	Valvola PARKER LUCIFER®			Potenza		Gruppo Elettrico	Disegno nr.
					Min	Mass		Min	Mass		Valvola	Housing	Bobina				
BSP	mm	Kv	KV m³/h	Qn l/min	bar	AC bar	DC bar	°C	°C					AC W	DC W		
3/8"	4	7.5	0.45	480	0	10	4	-10	100	FKM	121K3206	2995	481865	8	9	2.0	3551
	4	7.5	0.45	480	0	10	5	-10	120	FKM	121K3206	4270	481000	8	8	2.0	3551
	4	7.5	0.45	480	0	10	10	-10	120	FKM	121K3206	4270	486265	14	14	2.0	3551
	5	11	0.66	750	0	7	2	-10	100	FKM	121K3106	2995	481865	8	9	2.0	3551
	5	11	0.66	750	0	7	2.8	-10	120	FKM	121K3106	4270	481000	8	8	2.0	3551
	5	11	0.66	750	0	7	5	-10	120	FKM	121K3106	4270	486265	14	14	2.0	3551
	6	12	0.72	1100	0	5	1.1	-10	100	FKM	121K3306	2995	481865	8	9	2.0/14.2	3551
	6	12	0.72	1100	0	5	1.5	-10	120	FKM	121K3306	4270	481000	8	8	2.0/14.2	3551
	6	12	0.72	1100	0	5	3	-10	120	FKM	121K3306	4270	486265	14	14	2.0/14.2	3551
1/2"	8.5	25	1.5	1600	0	1.1	0.5	-10	100	FKM	E121K46	2995	481865	8	9	2.0	3427
	8.5	25	1.5	1600	0	2.2	0.5	-10	120	FKM	E121K46	4270	481000	8	8	2.0	3427
	8.5	25	1.5	1600	0	4	1.2	-10	120	FKM	E121K46	4270	486265	14	14	2.0	3427
	11	36	2.16	2500	0	0.7	0.3	-10	120	FKM	E121K45	2995	481865	8	9	2.0	3427
	11	36	2.16	2500	0	1.2	0.35	-10	120	FKM	E121K45	4270	481000	8	8	2.0	3427
	11	36	2.16	2500	0	2.5	0.7	-10	120	FKM	E121K45	4270	486265	14	14	2.0	3427

36

Parker Hannifin Corporation
Fluid Control Division Europe
Catalogo generale FCDE/0110/IT/V2.0

Esempio:
La valvola 121K3206 viene abbinata alla bobina 481865, ma è possibile scegliere qualsiasi altra bobina del gruppo 2.0.

È anche possibile scegliere prima la bobina e quindi selezionare la valvola in base ai gruppi di bobine.

NELLA PAGINA RELATIVA ALLE BOBINE

La sezione relativa alle bobine si trova al termine del catalogo e illustra le specifiche di ciascuna bobina, il codice, la classe di isolamento, la temperatura ambientale, il tipo di alimentazione e il peso.

2.0/2.1

Come detto in precedenza, la valvola 121K3206 viene abbinata alla bobina 481865, ma è compatibile anche con le altre bobine del gruppo 2.0. Ovviamente, anche la bobina 482725 è compatibile con la valvola scelta, perché fa parte di questo gruppo.

Nella sezione relativa alle bobine è disponibile il gruppo di ciascuna bobina. In questo modo è possibile vedere quali altre bobine sono compatibili con la valvola scelta.

BOBINE

GRUPPO BOBINE

2.0/2.1 BOBINE PER COLLEGAMENTO CON CONNETTORE DIN

BOBINE, 32 mm

Queste bobine possono essere montate con tutte le valvole a solenoide Parker che corrispondono al gruppo di bobine indicato.
Vedere la colonna "Gruppo bobine" nelle pagine delle valvole.

Il gruppo incapsulato è composto da una bobina, un circuito ferromagnetico e un collegamento tipo faston.

L'incapsulamento in materiale sintetico fornisce un alloggiamento compatto efficace, che offre una protezione totale da polvere, olio, acqua e così via.
Facili da montare in spazi ristretti, queste bobine forniscono una protezione antiurto e anticorrosione e semplificano l'adeguamento dell'apparecchiatura esistente ad altri requisiti, ecc.
Queste bobine sono conformi agli standard di sicurezza IEC/CENELEC e alla direttiva europea sulla bassa tensione.

Specifica			Standard		Doppia frequenza	
Rif. (senza connettore DIN) Rif. (con connettore DIN)			481865 482725		483510 482635	
Gruppo bobine			2.0/2.1			
Grado di protezione			IP65 secondo gli standard IEC/EN 60529 (con spina DIN)			
Classe di isolamento			F 155°C			
Collegamento elettrico			La bobina viene collegata con un connettore 2P+T secondo EN 175301-803 tipo A.			
Temperatura ambiente			Da -40°C a +50°C L'applicazione è limitata anche dall'intervallo di temperatura della valvola.			
Assorbimento	CC	Pn (caldo)	9 W		-	
		P (freddo) 20°C	12 W		-	
	CA	Pn (mantenimento)	8 W		9 W	
		Attrazione (freddo)	26 VA (9 W)		32 VA (10 W)	
Peso			130 g (senza connettore)			
Tensioni "Vn"	V CA/Hz	Codice Tensione	V CC	Codice tensione	V CA/Hz	Codice Tensione
Dal -10% al +10% della Vn	24/50 48/50 110/50 220-230/50	A2 A4 A5 3D	24 48 110	C2 C4 C5	24/50, 24/60 48/50, 48/60 110-115/50, 120/60 220-240/50, 240/60	P0 S4 S5 S6

Per ordinare una bobina, utilizzare il riferimento e il codice di tensione, ad esempio: 481865 per 24 V CC = **481865C2**
Altre tensioni sono disponibili nella tabella dei codici di tensione alla fine della sezione delle bobine.

Queste bobine devono essere utilizzate con gli housing appropriati. Di seguito è riportato un esempio.

Il kit di assemblaggio per bobine **Rif. 2995** corrisponde all'"housing" del sistema di numerazione delle valvole Lucifer® (valvola - housing - bobina - tensione).
È composto da una targa su cui sono riportati i dettagli del tipo di valvola, una rondella rotonda e un dado per fissare la bobina da 32 mm alla valvola.

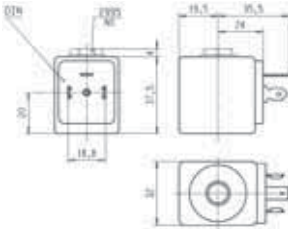

446

Parker Hannifin Corporation
Fluid Control Division Europe
Catalogo generale FCDE/0110/IT/V2.0

VALVOLE PER ARIA SECCA O LUBRIFICATA, GAS NEUTRI E LIQUIDI

2/2

Azionamento	Corpo	Funzione	Raccordi	Orifizio (mm)	Fattore Portata	Pressione Differenziale Mass. (Bar)	Temp. Mass. Fluido.	Pagina Elettrovalvola Parker	Pagina Elettrovalvola Parker LUCIFER®
Comando diretto	Ottone/Raccordi	Normalmente chiusa	1/8''	1.2 a 3	4.5	70	140	28	32
			1/4''	1.2 a 5	13	100	140	30	32
			3/8''	4 a 6	12	10	120	-	36
			1/2''	8.5 a 11	36	4	120	-	36
		Normalmente aperta	1/8''	2.5	3.5	30	140	-	40
			1/4''	1.5 a 3	4	40	140	38	40
		Controllo con impulsi elettrici	1/4''	3 a 5	11	20	100	-	40
	Ottone/Sottobase	Normalmente chiusa	5 mm	1.5 a 3	4.5	100	130	-	42
		Normalmente aperta	5 mm	1.5	1.5	20	120	-	42
Magnalift	Ottone/Raccordi	Normalmente chiusa	3/8''	13 a 15	65	20	140	46	48
			1/2''	13 a 15	65	20	140	46	48
			3/4''	15 a 20	100	20	140	46	50
			1''	15 a 25	170	20	140	46	52
Servopilotata	Ottone/Raccordi	Normalmente chiusa	1/4''	8 a 12	36	40	120	-	56
			3/8''	11 a 13	50	40	120	54	58
			1/2''	11 a 15	60	40	120	54	60
			3/4''	15 a 20	135	40	120	54	62
			1''	18 a 28	270	16	120	54	64
			1 1/2''	40	425	16	120	-	66
			2''	40	540	16	120	-	66
		Normalmente aperta	1/4''	8	36	40	140	-	70
			3/8''	11 a 13	50	40	140	68	70
			1/2''	13 a 15	60	40	140	68	70
			3/4''	15 a 20	135	40	120	68	72
			1''	25 a 40	420	16	120	68	72
			1 1/4''	28	270	16	120	-	72
			1 1/2''	40	420	12	100	-	72
			2''	40	540	12	120	-	72
		Controllo con impulsi elettrici	1/4''	12	32	12	100	-	74
			3/8''	12	45	12	100	-	74
			1/2''	12	50	12	100	-	74
			3/4''	18	100	12	100	-	74
			1''	18	110	12	100	-	74
	Ottone/Sottobase	Normalmente chiusa	14 mm	14	45	40	140	-	76
		Normalmente aperta	14 mm	14	46	40	120	-	76

2/2 VALVOLE PER ARIA SECCA O LUBRIFICATA, GAS NEUTRI E LIQUIDI
COMANDO DIRETTO

Impianti Commerciali

Impianti Industriali

Sistemi di Riscaldamento

OTTONE
MONTAGGIO SU RACCORDI
NORMALMENTE CHIUSA

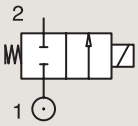

Raccordi	Orifizio Ø	Fattore portata			Pressione differenziale			Temp. Fluido		Tenuta	Valvola PARKER			Potenza		Gruppo Electtrico	Disegno nr.
					Min	Mass		Min	Mass								
BSP	mm	Kv l/min	KV m³/h	Qn m³/h	bar	AC bar	DC bar	°C	°C		Codice di Ordinazione	Modello valvola	Modello bobina	AC W	DC W		
1/8"	1.2	0.7	0.04	-	0	20	-	-10	140	FKM	**398018** [1]	**N74.4IV**	**WB4.5** 115/50-60	4.5	-	1.3	064
	1.5	1	0.06	-	0	20	-	-10	140	FKM	**398017** [1]	**N74.4AV**	**WB4.5** 115/50-60	4.5	-	1.3	064
	1.5	1	0.06	-	0	20	-	-10	140	FKM	**398014** [1]	**N74.4AV**	**WB4.5** 230/50-60	4.5	-	1.3	064
	1.5	1	0.06	-	0	20	-	-10	140	FKM	**398030** [1]	**N74.4AV**	**WB4.5** 24/50-60	4.5	-	1.3	064
	1.5	1	0.06	-	0	-	10	-10	140	FKM	**398034** [1]	**N74.4AV**	**WB5.0** 12DC	-	5	1.3	064
	1.5	1	0.06	-	0	-	10	-10	140	FKM	**398016** [1]	**N74.4AV**	**WB5.0** 24DC	-	5	1.3	064
	1.5	1	0.06	-	0	-	10	-10	140	FKM	**398013** [1]	**N74.4AVA.5**	**WB5.0** 5.0 24DC	-	5	1.3	064
	1.5	1.5	0.09	-	0	20	-	-10	140	FKM	**363378**	**PM146BV**	**ZB09**	9	-	20.1/20.2	034
	1.5	1.5	0.09	-	0	-	18	-10	140	FKM	**363378**	**PM146BV**	**ZB12**	-	12	20.1/20.2	034
	2.5	2.2	0.13	-	0	10	-	-10	140	FKM	**398026** [1]	**N74.4FV**	**WB4.5** 115/50-60	4.5	-	1.3	064
	2.5	2.2	0.13	-	0	10	-	-10	140	FKM	**398003** [1]	**N74.4FV**	**WB4.5** 115/60	4.5	-	1.3	064
	2.5	2.2	0.13	-	0	10	-	-10	140	FKM	**398000** [1]	**N74.4FV**	**WB4.5** 230/50-60	4.5	-	1.3	064
	2.5	2.2	0.13	-	0	10	-	-10	140	FKM	**398024** [1]	**N74.4FV**	**WB4.5** 24/50-60	4.5	-	1.3	064
	2.5	2.2	0.13	-	0	10	-	-10	140	FKM	**398001** [1]	**N74.4FV**	**WB4.5** 240/50-60	4.5	-	1.3	064
	2.5	2.2	0.13	-	0	-	4	-10	140	FKM	**398052** [1]	**N74.4FV**	**WB5.0** 12DC	-	5	1.3	064
	2.5	2.2	0.13	-	0	-	4	-10	140	FKM	**398022** [1]	**N74.4FV**	**WB5.0** 24DC	-	5	1.3	064
	2.5	3.3	0.197	-	0	10	-	-10	140	FKM	**363380**	**PM146FV**	**ZB09**	9	-	20.1/20.2	034

Nota:

1. Codice di ordinazione legato a una valvola completa di bobina, con il voltaggio indicato.

In questa pagina	Raccordi	Orifizio (mm)	Kv (l/min)	Press. Diff. (bar)	Temp. Fluido (°C)	Temp. Amb. (°C)
da	1/8''	1.2	0.7	4	-10	-10
a	1/8''	2.5	3.3	20	140	50

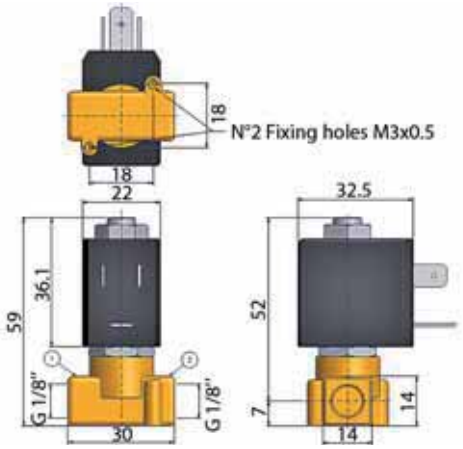

Disegno 064

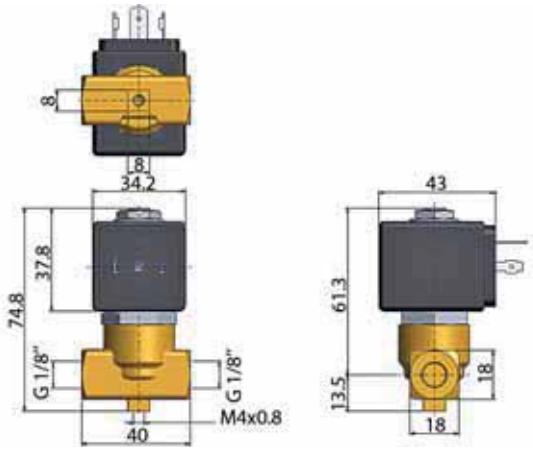

Disegno 034

2/2 VALVOLE PER ARIA SECCA O LUBRIFICATA, GAS NEUTRI E LIQUIDI

COMANDO DIRETTO

OTTONE

MONTAGGIO SU RACCORDI

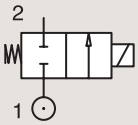

NORMALMENTE CHIUSA

Raccordi	Orifizio Ø	Fattore portata			Pressione differenziale			Temp. Fluido		Tenuta	Valvola PARKER			Potenza		Gruppo Electtrico	Disegno nr.
					Min	Mass		Min	Mass		Codice di Ordinazione	Modello valvola	Modello bobina				
BSP	mm	Kv l/min	KV m³/h	Qn m³/h	bar	AC bar	DC bar	°C	°C					AC W	DC W		
1/8"	2.5	3.3	0.197	-	0	-	5	-10	140	FKM	**363380**	**PM146FV**	**ZB12**	-	12	20.1/20.2	034
	3	4.5	0.27	-	0	7	-	-10	140	FKM	**363390**	**PM146HV**	**ZB09**	9	-	20.1/20.2	034
	3	4.5	0.27	-	0	-	2	-10	140	FKM	**363390**	**PM146HV**	**ZB12**	-	12	20.1/20.2	034
1/4"	2.5	2.2	0.13	-	0	10	-	-10	140	FKM	**398006**[1]	**N74.4WV**	**WB4.5** 230/50-60	4.5	-	1.3	065
	2.5	2.2	0.13	-	0	10	-	-10	140	FKM	**398007**[1]	**N74.4WV**	**WB4.5** 24/50-60	4.5	-	1.3	065
	2.5	2.2	0.13	-	0	-	4	-10	140	FKM	**398008**[1]	**N74.4WV**	**WB5.0** 12DC	-	5	1.3	065
	2.5	2.2	0.13	-	0	-	4	-10	140	FKM	**398010**[1]	**N74.4WV**	**WB5.0** 24DC	-	5	1.3	065
	2.5	2.2	0.13	-	0	19	-	-10	140	FKM	**398012**[1]	**N74.4WV**	**WB8.0** 230/50-60	8	-	1.3	065
	3	4.5	0.27	-	0	7	-	-10	140	FKM	**363444**	**PM146YV**	**ZB09**	9	-	20.1/20.2	035
	3	4.5	0.27	-	0	-	2	-10	140	FKM	**363444**	**PM146YV**	**ZB12**	-	12	20.1/20.2	035
	4.5	9	0.53	-	0	6	-	-10	140	FKM	**363457**	**PM146.3KV**	**ZB14**	14	-	20.2	035
	4.5	9	0.53	-	0	-	2.5	-10	140	FKM	**363457**	**PM146.3KV**	**ZB16**	-	16	20.2	035
	6	13	0.75	-	0	6	-	-10	140	FKM	**363467**	**PM146.3ABV**	**ZB14**	14	-	20.2	035
	6	13	0.75	-	0	-	1	-10	140	FKM	**363467**	**PM146.3ABV**	**ZB16**	-	16	20.2	035

Nota:

1. Codice di ordinazione legato a una valvola completa di bobina, con il voltaggio indicato.

In questa pagina	Raccordi	Orifizio (mm)	Kv (l/min)	Press. Diff. (bar)	Temp. Fluido (°C)	Temp. Amb. (°C)
da	1/8''	2.5	2.2	1	-10	-10
a	1/4''	6	13	19	140	50

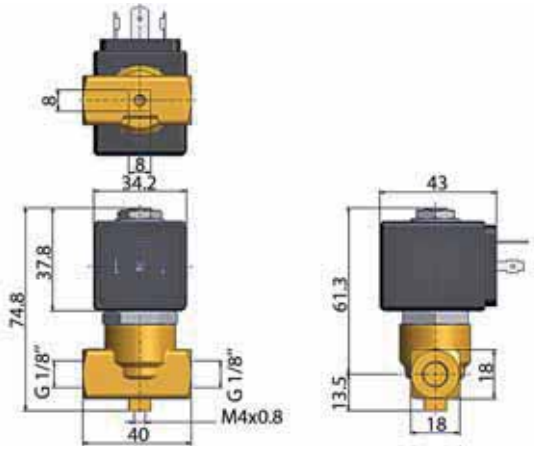

Disegno 034

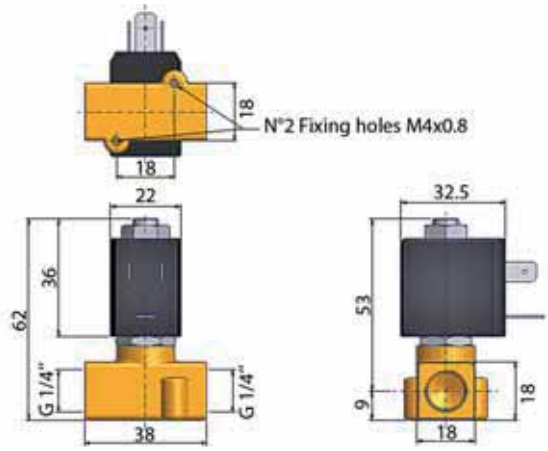

Disegno 065

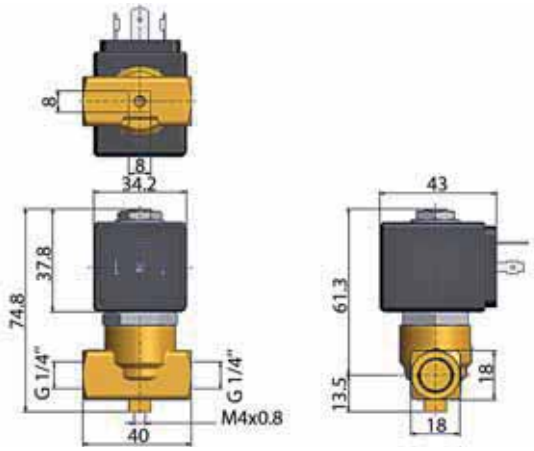

Disegno 035

2/2 VALVOLE PER ARIA SECCA O LUBRIFICATA, GAS NEUTRI E LIQUIDI
COMANDO DIRETTO

Raccordi	Orifizio Ø	Fattore Portata			Pressione differenziale			Temp. Fluido		Tenuta	Valvola PARKER LUCIFER®			IS	Potenza		Gruppo Elettrico	Disegno nr.
					Min	Mass		Min	Mass		Valvola	Housing	Bobina					
BSP	mm	Kv l/min	KV m³/h	Qn l/min	bar	AC bar	DC bar	°C	°C						AC W	DC W		
1/8"	1.5	0.9	0.05	70	0	20	12	-10	75	FKM	**121M14**	**8993**	**481180**		4	5	1.1	3382
	1.5	0.9	0.05	70	0	20	4	-10	75	FKM	**121M14**	**8993**	**488980**		2	2.5	1.1	3382
	1.5	1.5	0.09	80	0	60	25	-30	75	PCTFE	**E121K14**	**2995**	**481865**		8	9	2.0	3510
	1.5	1.5	0.09	80	0	70	30	-30	75	PCTFE	**E121K14**	**4270**	**481000**		8	8	2.0	3510
	1.5	1.5	0.09	80	0	70	55	-30	75	PCTFE	**E121K14**	**4270**	**486265**		14	14	2.0	3510
	2	2	0.12	125	0	10	7	-10	75	FKM	**121M13**	**8993**	**481180**		4	5	1.1	3382
	2	2	0.12	125	0	10	2.5	-10	75	FKM	**121M13**	**8993**	**488980**		2	2.5	1.1	3382
	2.5	3.5	0.21	220	0	28	10	-30	100	Ruby	**E121K23**	**2995**	**481865**		8	9	2.0	3510
	2.5	3.5	0.21	220	0	34	12	-30	130	Ruby	**E121K23**	**4270**	**481000**		8	8	2.0	3510
	2.5	3.5	0.21	220	0	50	22	-30	120	Ruby	**E121K23**	**4270**	**486265**		14	14	2.0	3510
	3	4.5	0.27	320	0	10	7	-10	100	FKM	**121K1302**	**2995**	**481865**		8	9	2.0	3510
	3	4.5	0.27	320	0	10	8	-10	120	FKM	**121K1302**	**4270**	**481000**		8	8	2.0	3510
	3	4.5	0.27	320	0	10	10	-10	120	FKM	**121K1302**	**4270**	**486265**		14	14	2.0	3510
1/4"	1.2	0.85	0.05	50	0	80	36	-30	100	Ruby	**E121K65**	**2995**	**481865**		8	9	2.0	3510
	1.2	0.85	0.05	50	0	100	43	-30	130	Ruby	**E121K65**	**4270**	**481000**		8	8	2.0	3510
	1.2	0.85	0.05	50	0	100	75	-30	120	Ruby	**E121K65**	**4270**	**486265**		14	14	2.0	3510
	1.5	1.5	0.09	80	0	-	8	-20	75	PUR	**121K0497** [2]	**2995**	**482740**		-	1.6	6.0/8.0	8274
	1.5	1.5	0.09	80	0	10	10	-20	75	PUR	**121K0497** [2]	**-**	**495900**		2.5	2	6.0/8.0	8274
	1.5	1.5	0.09	80	0	-	10	-20	75	PUR	**121K0497** [2]	**-**	**495910**	*	-	0.3 to 3	6.0/8.0	8274
	1.5	1.5	0.09	80	0	-	8	-20	75	PUR	**121K0497** [2]	**2995**	**496125**		-	1.6	6.0/8.0	8274
	1.5	1.5	0.09	80	0	60	25	-30	75	PCTFE	**E121K04**	**2995**	**481865**		8	9	2.0	3510
	1.5	1.5	0.09	80	0	70	30	-30	75	PCTFE	**E121K04**	**4270**	**481000**		8	8	2.0	3510
	1.5	1.5	0.09	80	0	70	55	-30	75	PCTFE	**E121K04**	**4270**	**486265**		14	14	2.0	3510
	1.5	1.5	0.09	80	0	20	20	-10	100	FKM	**E121K0402**	**2995**	**481865**		8	9	2.0/3.0	3510
	1.5	1.5	0.09	80	0	20	20	-10	120	FKM	**E121K0402**	**4270**	**481000**		8	8	2.0/3.0	3510
	1.5	1.5	0.09	80	0	60	25	-30	100	Ruby	**E121K67**	**2995**	**481865**		8	9	2.0	3510
	1.5	1.5	0.09	80	0	75	30	-30	130	Ruby	**E121K67**	**4270**	**481000**		8	8	2.0	3510
	1.5	1.5	0.09	80	0	100	55	-30	120	Ruby	**E121K67**	**4270**	**486265**		14	14	2.0	3510
	2.5	3.5	0.21	220	0	14	7	-10	100	FKM	**121K0706**	**2995**	**481865**		8	9	2.0	3510
	2.5	3.5	0.21	220	0	14	9	-10	120	FKM	**121K0706**	**4270**	**481000**		8	8	2.0	3510
	2.5	3.5	0.21	220	0	14	14	-10	120	FKM	**121K0706**	**4270**	**486265**		14	14	2.0	3510
	2.5	3.5	0.21	220	0	28	10	-30	75	PCTFE	**E121K07**	**2995**	**481865**		8	9	2.0	3510
	2.5	3.5	0.21	220	0	34	12	-30	75	PCTFE	**E121K07**	**4270**	**481000**		8	8	2.0	3510
	2.5	3.5	0.21	220	0	50	22	-30	75	PCTFE	**E121K07**	**4270**	**486265**		14	14	2.0	3510

Nota:

1. Con comando manuale
2. Valvola compatibile con acqua fino a 40°C

In questa pagina	Raccordi	Orifizio (mm)	Kv (l/min)	Press. Diff. (bar)	Temp. Fluido (°C)	Temp. Amb. (°C)
da	1/8"	1.2	0.9	2.5	-30	-20
a	1/4"	3	4.5	100	130	50

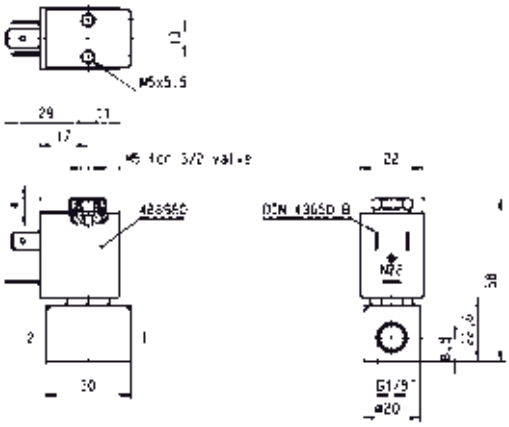

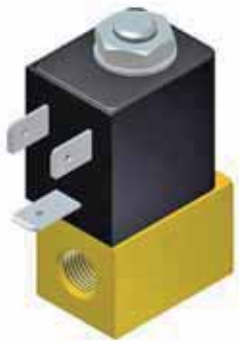

Disegno 3382

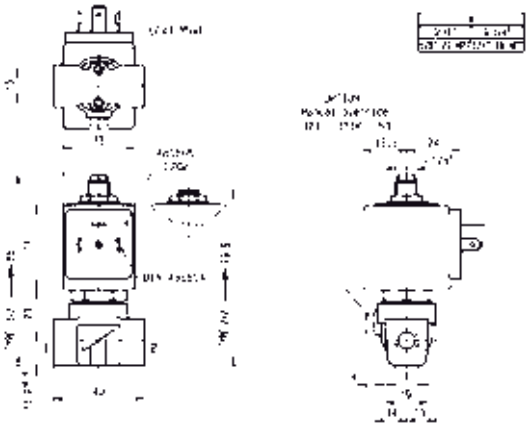

Disegno 3510

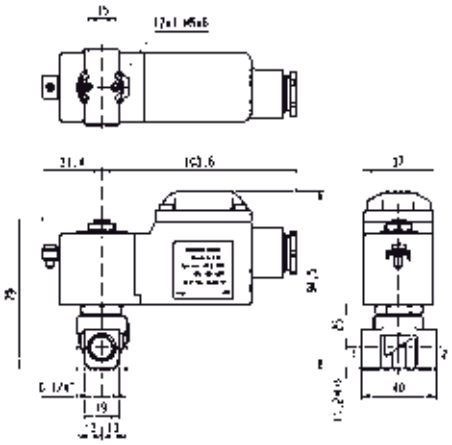

Disegno 8274

2/2 VALVOLE PER ARIA SECCA O LUBRIFICATA, GAS NEUTRI E LIQUIDI
COMANDO DIRETTO

OTTONE
MONTAGGIO SU RACCORDI
NORMALMENTE CHIUSA

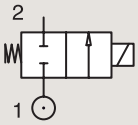

Raccordi	Orifizio Ø	Fattore Portata			Pressione differenziale			Temp. Fluido		Tenuta	Valvola PARKER LUCIFER®			IS	Potenza		Gruppo Elettrico	Disegno nr.
					Min	Mass		Min	Mass									
BSP	mm	Kv l/min	KV m³/h	Qn l/min	bar	AC bar	DC bar	°C	°C		Valvola	Housing	Bobina		AC W	DC W		
	2.5	3.5	0.21	220	0	28	10	-30	100	Ruby	**E121K63**	**2995**	**481865**		8	9	2.0	3510
	2.5	3.5	0.21	220	0	34	12	-30	130	Ruby	**E121K63**	**4270**	**481000**		8	8	2.0	3510
	2.5	3.5	0.21	220	0	50	22	-30	120	Ruby	**E121K63**	**4270**	**486265**		14	14	2.0	3510
	3	3.5	0.21	250	0	-	2	-20	75	PUR	**121K0397** [2]	**2995**	**482740**		-	1.6	6.0/8.0	8274
	3	3.5	0.21	250	0	4.5	4	-20	75	PUR	**121K0397** [2]	**-**	**495900**		2.5	2	6.0/8.0	8274
	3	3.5	0.21	250	0	-	4.5	-20	75	PUR	**121K0397** [2]	**-**	**495910**	*	-	0.3 to 3	6.0/8.0	8274
	3	3.5	0.21	250	0	-	2	-20	75	PUR	**121K0397** [2]	**2995**	**496125**		-	1.6	6.0/8.0	8274
	3	4.5	0.27	320	0	20	7	-30	75	PCTFE	**E121K03**	**2995**	**481865**		8	9	2.0/3.0	3510
	3	4.5	0.27	320	0	25	8.5	-30	75	PCTFE	**E121K03**	**4270**	**481000**		8	8	2.0/3.0	3510
	3	4.5	0.27	320	0	36	15	-30	75	PCTFE	**E121K03**	**4270**	**486265**		14	14	2.0/3.0	3510
	3	4.5	0.27	320	0	10	7	-10	100	FKM	**E121K0302**	**2995**	**481865**		8	9	2.0	3510
	3	4.5	0.27	320	0	10	8.5	-10	120	FKM	**E121K0302**	**4270**	**481000**		8	8	2.0	3510
	3	4.5	0.27	320	0	10	7	-10	100	FKM	**E121K0302**	**4270**	**486265**		14	14	2.0	3510
	3	4.5	0.27	320	0	10	7	-10	100	FKM	**E121K0352** [1]	**2995**	**481865**		8	9	2.0	3510
	3	4.5	0.27	320	0	10	8.5	-10	120	FKM	**E121K0352** [1]	**4270**	**481000**		8	8	2.0	3510
	3	4.5	0.27	320	0	10	10	-10	120	FKM	**E121K0352** [1]	**4270**	**486265**		14	14	2.0	3510
1/4"	3	4.5	0.27	320	0	20	7	-30	100	Ruby	**E121K64**	**2995**	**481865**		8	9	2.0	3510
	3	4.5	0.27	320	0	25	8.5	-30	130	Ruby	**E121K64**	**4270**	**481000**		8	8	2.0	3510
	3	4.5	0.27	320	0	36	15	-30	120	Ruby	**E121K64**	**4270**	**486265**		14	14	2.0	3510
	4	7.5	0.45	480	0	10	4	-10	100	FKM	**121K02**	**2995**	**481865**		8	9	2.0	3510
	4	7.5	0.45	480	0	10	5	-10	120	FKM	**121K02**	**4270**	**481000**		8	8	2.0	3510
	4	7.5	0.45	480	0	10	10	-10	120	FKM	**121K02**	**4270**	**486265**		14	14	2.0	3510
	4	7.5	0.45	480	0	10	4	-10	100	FKM	**121K0250** [1]	**2995**	**481865**		8	9	2.0	3510
	4	7.5	0.45	480	0	10	5	-10	120	FKM	**121K0250** [1]	**4270**	**481000**		8	8	2.0	3510
	4	7.5	0.45	480	0	10	10	-10	120	FKM	**121K0250** [1]	**4270**	**486265**		14	14	2.0	3510
	5	11	0.66	750	0	7	2	-10	100	FKM	**121K01**	**2995**	**481865**		8	9	2.0/14.2	3510
	5	11	0.66	750	0	7	2.8	-10	120	FKM	**121K01**	**4270**	**481000**		8	8	2.0/14.2	3510
	5	11	0.66	750	0	7	5	-10	120	FKM	**121K01**	**4270**	**486265**		14	14	2.0/14.2	3510
	5	11	0.66	750	0	7	2	-10	100	FKM	**121K0106**	**2995**	**481865**		8	9	2.0	3510
	5	11	0.66	750	0	7	2.8	-10	120	FKM	**121K0106**	**4270**	**481000**		8	8	2.0	3510
	5	11	0.66	750	0	7	5	-10	120	FKM	**121K0106**	**4270**	**486265**		14	14	2.0	3510
	5	11	0.66	750	0	7	2	-10	100	FKM	**121K0150** [1]	**2995**	**481865**		8	9	2.0	3510
	5	11	0.66	750	0	7	2.8	-10	120	FKM	**121K0150** [1]	**4270**	**481000**		8	8	2.0	3510
	5	11	0.66	750	0	7	5	-10	120	FKM	**121K0150** [1]	**4270**	**486265**		14	14	2.0	3510

Nota:

1. Con comando manuale
2. Valvola compatibile con acqua fino a 40°C

In questa pagina	Raccordi	Orifizio (mm)	Kv (l/min)	Press. Diff. (bar)	Temp. Fluido (°C)	Temp. Amb. (°C)
da	1/4"	2.5	3.5	2	-30	-20
a	1/4"	5	11	50	130	50

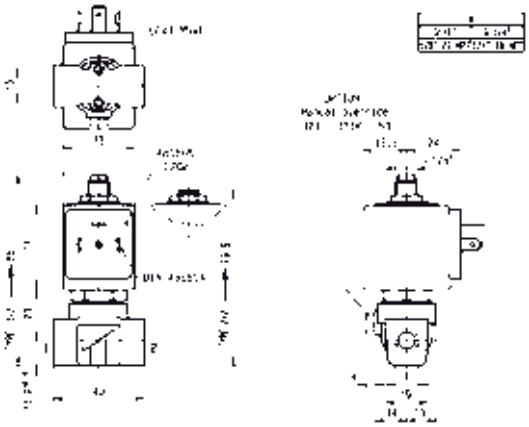

Disegno 3510

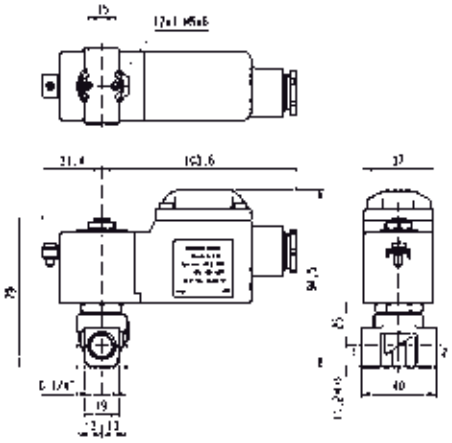

Disegno 8274

2/2 VALVOLE PER ARIA SECCA O LUBRIFICATA, GAS NEUTRI E LIQUIDI

COMANDO DIRETTO

OTTONE

MONTAGGIO SU RACCORDI

NORMALMENTE CHIUSA

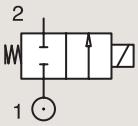

Raccordi	Orifizio Ø	Fattore Portata			Max. Pressione differenziale			Temp. Fluido		Tenuta	Valvola PARKER LUCIFER®			Potenza		Gruppo Elettrico	Disegno nr.
					Min	Mass		Min	Mass		Valvola	Housing	Bobina				
BSP	mm	Kv l/min	KV m³/h	Qn l/min	bar	AC bar	DC bar	°C	°C					AC W	DC W		
3/8"	4	7.5	0.45	480	0	10	4	-10	100	FKM	**121K3206**	**2995**	**481865**	8	9	2.0	3551
	4	7.5	0.45	480	0	10	5	-10	120	FKM	**121K3206**	**4270**	**481000**	8	8	2.0	3551
	4	7.5	0.45	480	0	10	10	-10	120	FKM	**121K3206**	**4270**	**486265**	14	14	2.0	3551
	5	11	0.66	750	0	7	2	-10	100	FKM	**121K3106**	**2995**	**481865**	8	9	2.0	3551
	5	11	0.66	750	0	7	2.8	-10	120	FKM	**121K3106**	**4270**	**481000**	8	8	2.0	3551
	5	11	0.66	750	0	7	5	-10	120	FKM	**121K3106**	**4270**	**486265**	14	14	2.0	3551
	6	12	0.72	1100	0	5	1.1	-10	100	FKM	**121K3306**	**2995**	**481865**	8	9	2.0/14.2	3551
	6	12	0.72	1100	0	5	1.5	-10	120	FKM	**121K3306**	**4270**	**481000**	8	8	2.0/14.2	3551
	6	12	0.72	1100	0	5	3	-10	120	FKM	**121K3306**	**4270**	**486265**	14	14	2.0/14.2	3551
1/2"	8.5	25	1.5	1600	0	1.1	0.5	-10	100	FKM	**E121K46**	**2995**	**481865**	8	9	2.0	3427
	8.5	25	1.5	1600	0	2.2	0.5	-10	120	FKM	**E121K46**	**4270**	**481000**	8	8	2.0	3427
	8.5	25	1.5	1600	0	4	1.2	-10	120	FKM	**E121K46**	**4270**	**486265**	14	14	2.0	3427
	11	36	2.16	2500	0	0.7	0.3	-10	100	FKM	**E121K45**	**2995**	**481865**	8	9	2.0	3427
	11	36	2.16	2500	0	1.2	0.35	-10	120	FKM	**E121K45**	**4270**	**481000**	8	8	2.0	3427
	11	36	2.16	2500	0	2.5	0.7	-10	120	FKM	**E121K45**	**4270**	**486265**	14	14	2.0	3427

In questa pagina	Raccordi	Orifizio (mm)	Kv (l/min)	Press. Diff. (bar)	Temp. Fluido (°C)	Temp. Amb. (°C)
da	3/8''	4	7.5	0.3	-10	-20
a	1/2''	11	36	10	120	50

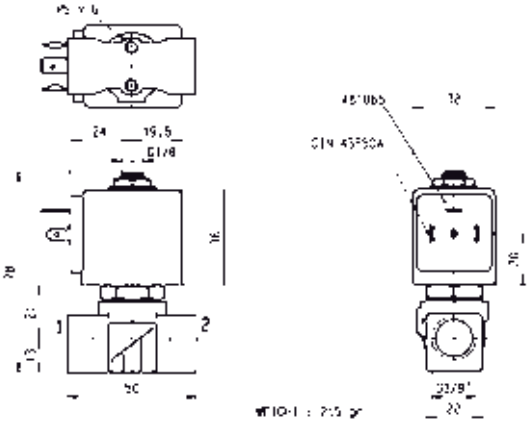

Disegno 3551

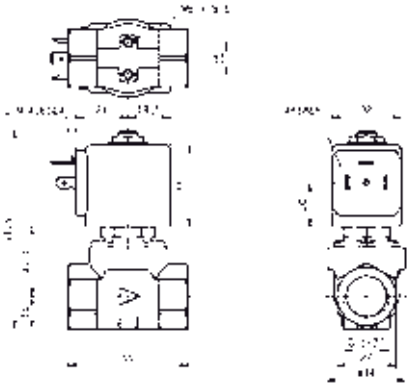

Disegno 3427

2/2 VALVOLE PER ARIA SECCA O LUBRIFICATA, GAS NEUTRI E LIQUIDI

COMANDO DIRETTO

OTTONE

MONTAGGIO SU RACCORDI

NORMALMENTE APERTA

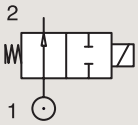

Raccordi	Orifizio Ø	Fattore portata			Pressione differenziale			Temp. Fluido		Tenuta	Valvola PARKER			Potenza		Gruppo Electtrico	Disegno nr.
					Min	Mass		Min	Mass		Codice di Ordinazione	Modello valvola	Modello bobina				
BSP	mm	Kv l/min	KV m³/h	Qn m³/h	bar	AC bar	DC bar	°C	°C					AC W	DC W		
1/4''	1.5	1.3	0.08	-	0	22	-	-10	140	FKM	**363475**	**PM151GV**	**ZB09**	9	-	20.1/20.2	036
	1.5	1.3	0.08	-	0	-	22	-10	140	FKM	**363475**	**PM151GV**	**ZB12**	-	12	20.1/20.2	036
	2	1.8	0.11	-	0	18	-	-10	140	FKM	**362290**	**PM136.2FV**	**ZB14**	14	-	20.2	020
	2	1.8	0.11	-	0	-	18	-10	140	FKM	**362290**	**PM136.2FV**	**ZB16**	-	16	20.2	020
	2	2.5	0.15	-	0	12	-	-10	140	FKM	**363570**	**PM151HV**	**ZB09**	9	-	20.1/20.2	036
	2	2.5	0.15	-	0	-	12	-10	140	FKM	**363570**	**PM151HV**	**ZB12**	-	12	20.1/20.2	036
	3	4	0.24	-	0	5.5	-	-10	140	FKM	**362286**	**PM136YV**	**ZB14**	14	-	20.2	020
	3	4	0.24	-	0	-	5.5	-10	140	FKM	**362286**	**PM136YV**	**ZB16**	-	16	20.2	020

In questa pagina	Raccordi	Orifizio (mm)	Kv (l/min)	Press. Diff. (bar)	Temp. Fluido (°C)	Temp. Amb. (°C)
da	1/4''	1.5	1.3	5.5	-10	-10
a	1/4''	3	4	22	140	50

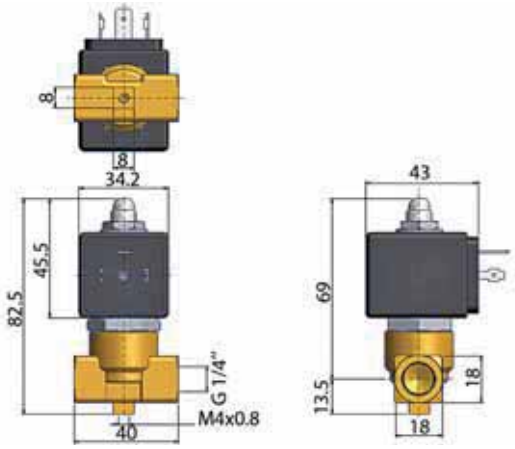

Disegno 036

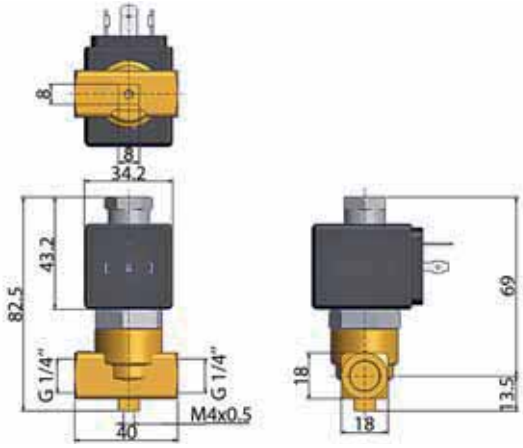

Disegno 020

2/2 VALVOLE PER ARIA SECCA O LUBRIFICATA, GAS NEUTRI E LIQUIDI
COMANDO DIRETTO

OTTONE
MONTAGGIO SU RACCORDI
NORMALMENTE APERTA

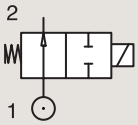

Raccordi	Orifizio Ø	Fattore Portata			Pressione differenziale			Temp. Fluido		Tenuta	Valvola PARKER LUCIFER®			Potenza		Gruppo Elettrico	Disegno nr.
					Min	Mass		Min	Mass		Valvola	Housing	Bobina				
BSP	mm	Kv l/min	KV m³/h	Qn l/min	bar	AC bar	DC bar	°C	°C					AC W	DC W		
1/8"	2.5	3.5	0.21	-	0	30	-	-30	140	Ruby	122K9363	4270	481044	14	-	2.2	3510
	2.5	3.5	0.21	-	0	30	30	-30	140	Ruby	122K9363	4270	486265	14	14	2.2	3510
1/4"	1.5	1.5	0.09	9.6	0	30	30	-10	100	PCTFE	122K84	2995	481865	8	9	2.0	3510
	1.5	1.5	0.09	9.6	0	30	30	-10	100	PCTFE	122K84	4270	481000	8	8	2.0	3510
	1.5	1.5	0.09	9.6	0	30	30	-10	120	PCTFE	122K84	4270	486265	14	14	2.0	3510
	1.5	1.5	0.09	80	0	20	20	-10	100	FKM	122K8406	2995	481865	8	9	2.1	3510
	1.5	1.5	0.09	80	0	20	20	-10	120	FKM	122K8406	4270	481000	8	8	2.1	3510
	1.5	1.5	0.09	80	0	40	40	-30	100	Ruby	122K8408	2995	481865	8	9	2.1	3510
	1.5	1.5	0.09	80	0	40	40	-30	130	Ruby	122K8408	4270	481000	8	8	2.1	3510
	1.5	1.5	0.09	80	0	40	40	-30	130	Ruby	122K8408	4270	486265	14	14	2.0	3510
	2.5	3	0.18	180	0	12	12	-30	75	PCTFE	122K83	2995	481865	8	9	2.1	3510
	2.5	3	0.18	180	0	12	12	-30	75	PCTFE	122K83	4270	481000	8	8	2.1	3510
	2.5	3	0.18	180	0	12	12	-30	75	PCTFE	122K83	4270	486265	14	14	2.0	3510
	2.5	3	0.18	180	0	12	12	-10	100	FKM	122K8306	2995	481865	8	9	2.0	3510
	2.5	3	0.18	180	0	12	12	-10	120	FKM	122K8306	4270	481000	8	8	2.0	3510
	2.5	3	0.18	180	0	12	12	-10	120	FKM	122K8306	4270	486265	14	14	2.0	3510
	2.5	3.5	0.21	-	0	30	-	-30	140	Ruby	122K8363	4270	481044	14	-	2.2	3510
	2.5	3.5	0.21	-	0	30	30	-30	140	Ruby	122K8363	4270	486265	14	14	2.2	3510

OTTONE
MONTAGGIO SU RACCORDI
CONTROLLO CON IMPULSI ELETTRICI

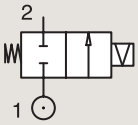

Raccordi	Orifizio Ø	Fattore Portata			Pressione differenziale			Temp. Fluido		Tenuta	Valvola PARKER LUCIFER®			Potenza		Gruppo Elettrico	Disegno nr.
					Min	Mass		Min	Mass		Valvola	Housing	Bobina				
BSP	mm	Kv l/min	KV m³/h	Qn l/min	bar	AC bar	DC bar	°C	°C					AC W	DC W		
1/4"	3	4.5	0.27	320	0	20	-	-30	75	PCTFE	125K03	4269	484990	11	-	4.0	8296
	3	4.5	0.27	320	0	-	7	-30	75	PCTFE	125K03	4269	485400	-	13	4.0	8296
	5	11	0.66	750	0	5	-	-10	100	FKM	125K01	4269	484990	11	-	4.0	8296
	5	11	0.66	750	0	-	1.5	-10	100	FKM	125K01	4269	485400	-	13	4.0	8296

In questa pagina	Raccordi	Orifizio (mm)	Kv (l/min)	Press. Diff. (bar)	Temp. Fluido (°C)	Temp. Amb. (°C)
da	1/8''	1.5	1.5	1.5	-30	-10
a	1/4''	5	11	40	140	50

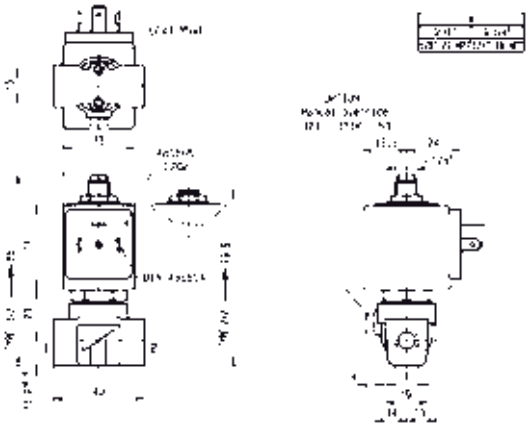

Disegno 3510

Disegno 8296

2/2 VALVOLE PER ARIA SECCA O LUBRIFICATA, GAS NEUTRI E LIQUIDI
COMANDO DIRETTO

OTTONE
MONTAGGIO SOTTOBASE
NORMALMENTE CHIUSA

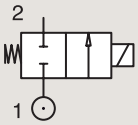

Raccordi	Orifizio Ø	Fattore Portata			Pressione differenziale			Temp. Fluido A		Tenuta	Valvola PARKER LUCIFER®			Potenza		Gruppo Elettrico	Disegno nr.
					Min	Mass		Min	Mass		Valvola	Housing	Bobina				
	mm	Kv l/min	KV m³/h	Qn l/min	bar	AC bar	DC bar	°C	°C					AC W	DC W		
SB	1.5	1.5	0.09	80	0	20	-	-10	100	EPDM	**121F4417**	**2995**	**483510**	9	-	2.0	3509
	1.5	1.5	0.09	80	0	60	25	-30	100	Ruby	**121F67**	**2995**	**481865**	8	9	2.0	3509
	1.5	1.5	0.09	80	0	75	30	-30	130	Ruby	**121F67**	**4270**	**481000**	8	8	2.0	3509
	1.5	1.5	0.09	80	0	100	55	-30	120	Ruby	**121F67**	**4270**	**486265**	14	14	2.0	3509
	1.5	1.5	0.09	80	0	60	25	-30	75	PCTFE	**E121F44**	**2995**	**481865**	8	9	2.0	3509
	1.5	1.5	0.09	80	0	70	30	-30	75	PCTFE	**E121F44**	**4270**	**481000**	8	8	2.0	3509
	1.5	1.5	0.09	80	0	70	55	-30	75	PCTFE	**E121F44**	**4270**	**486265**	14	14	2.0	3509
	1.5	1.5	0.09	80	0	20	20	-10	100	FKM	**E121F4406**	**2995**	**481865**	8	9	2.0	3509
	1.5	1.5	0.09	80	0	20	20	-10	120	FKM	**E121F4406**	**4270**	**481000**	8	8	2.0	3509
	1.5	1.5	0.09	80	0	20	20	-10	120	FKM	**E121F4406**	**4270**	**486265**	14	14	2.0	3509
	2.5	3.5	0.21	220	0	28	10	-30	75	PCTFE	**121F47**	**2995**	**481865**	8	9	2.0	3509
	2.5	3.5	0.21	220	0	34	12	-30	75	PCTFE	**121F47**	**4270**	**481000**	8	8	2.0	3509
	2.5	3.5	0.21	220	0	50	22	-30	75	PCTFE	**121F47**	**4270**	**486265**	14	14	2.0	3509
	2.5	3.5	0.21	220	0	14	7	-10	100	FKM	**121F4706**	**2995**	**481865**	8	9	2.0	3509
	2.5	3.5	0.21	220	0	14	9	-10	120	FKM	**121F4706**	**4270**	**481000**	8	8	2.0	3509
	2.5	3.5	0.21	220	0	14	14	-10	120	FKM	**121F4706**	**4270**	**486265**	14	14	2.0	3509
	2.5	3.5	0.21	220	0	28	10	-30	100	Ruby	**121F63**	**2995**	**481865**	8	9	2.0	3509
	2.5	3.5	0.21	220	0	34	12	-30	130	Ruby	**121F63**	**4270**	**481000**	8	8	2.0	3509
	2.5	3.5	0.21	220	0	50	22	-30	120	Ruby	**121F63**	**4270**	**486265**	14	14	2.0	3509
	3	4.5	0.27	320	0	10	-	-10	100	FKM	**121F4317**	**2995**	**483510**	9	-	2.0	3509
	3	4.5	0.27	320	0	20	7	-30	100	Ruby	**121F64**	**2995**	**481865**	8	9	2.0	3509
	3	4.5	0.27	320	0	25	8.5	-30	130	Ruby	**121F64**	**4270**	**481000**	8	8	2.0	3509
	3	4.5	0.27	320	0	36	15	-30	120	Ruby	**121F64**	**4270**	**486265**	14	14	2.0	3509
	3	4.5	0.27	320	0	20	7	-30	75	PCTFE	**E121F43**	**2995**	**481865**	8	9	2.0	3509
	3	4.5	0.27	320	0	25	8.5	-30	75	PCTFE	**E121F43**	**4270**	**481000**	8	8	2.0	3509
	3	4.5	0.27	320	0	36	15	-30	75	PCTFE	**E121F43**	**4270**	**486265**	14	14	2.0	3509
	3	4.5	0.27	320	0	10	7	-10	100	FKM	**E121F4302**	**2995**	**481865**	8	9	2.0/3.0	3509
	3	4.5	0.27	320	0	10	8.5	-10	120	FKM	**E121F4302**	**4270**	**481000**	8	8	2.0/3.0	3509
	3	4.5	0.27	320	0	10	10	-10	120	FKM	**E121F4302**	**4270**	**486265**	14	14	2.0/3.0	3509

In questa pagina	Raccordi	Orifizio (mm)	Kv (l/min)	Press. Diff. (bar)	Temp. Fluido (°C)	Temp. Amb. (°C)
da	5 mm	1.5	1.5	7	-30	-10
a	5 mm	3	4.5	100	130	50

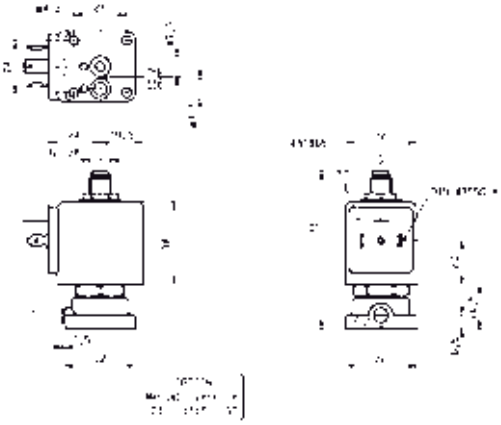

Disegno 3509

2/2 VALVOLE PER ARIA SECCA O LUBRIFICATA, GAS NEUTRI E LIQUIDI

COMANDO DIRETTO

OTTONE
MONTAGGIO SOTTOBASE
NORMALMENTE APERTA

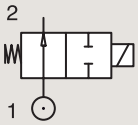

Raccordi	Orifizio Ø	Fattore Portata			Pressione differenziale			Temp. Fluido		Tenuta	Valvola PARKER LUCIFER®			Potenza		Gruppo Elettrico	Disegno nr.
					Min	Mass		Min	Mass		Valvola	Housing	Bobina				
	mm	Kv l/min	KV m³/h	Qn l/min	bar	AC bar	DC bar	°C	°C					AC W	DC W		
SB	1.5	1.5	0.09	80	0	20	20	-10	100	FKM	**122F44**	**2995**	**481865**	8	9	2.1	3509
	1.5	1.5	0.09	80	0	20	20	-10	120	FKM	**122F44**	**4270**	**481000**	8	8	2.1	3509

In questa pagina	Raccordi	Orifizio (mm)	Kv (l/min)	Press. Diff. (bar)	Temp. Fluido (°C)	Temp. Amb. (°C)
da	5 mm	1.5	1.5	20	-10	-10
a	5 mm	1.5	1.5	20	120	50

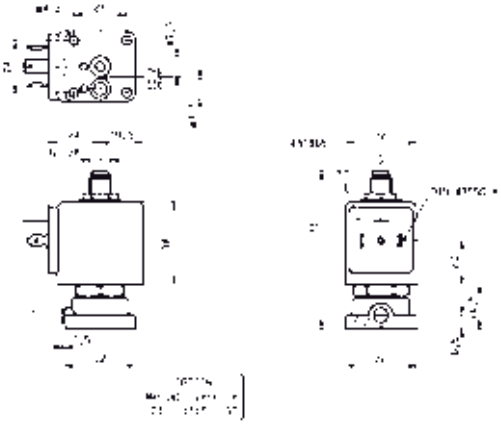

Disegno 3509

2/2 VALVOLE PER ARIA SECCA O LUBRIFICATA, GAS NEUTRI E LIQUIDI

MAGNALIFT

Impianti Commerciali

Impianti Industriali

OTTONE

MONTAGGIO SU RACCORDI

NORMALMENTE CHIUSA

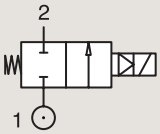

Raccordi	Orifizio Ø	Fattore portata			Pressione differenziale			Temp. Fluido		Tenuta	Valvola PARKER			Potenza		Gruppo Electtrico	Disegno nr.
					Min	Mass		Min	Mass		Codice di Ordinazione	Modello valvola	Modello bobina				
BSP	mm	Kv l/min	KV m^3/h	Qn m^3/h	bar	AC bar	DC bar	°C	°C					AC W	DC W		
3/8''	13	40	2.4	-	0	5	-	-10	140	FKM	361810	PM123IV	ZB09	9	-	20.1	004
1/2''	13	40	2.4	-	0	5	-	-10	140	FKM	361850	PM123AV	ZB09	9	-	20.1	003
3/4''	20	100	6	-	0	3	-	-10	140	FKM	361910	PM123CV	JB14	14	-	21.0	005
1''	25	117	7	-	0	3	-	-10	140	FKM	361950	PM123DV	JB14	14	-	21.0	006

In questa pagina	Raccordi	Orifizio (mm)	Kv (l/min)	Press. Diff. (bar)	Temp. Fluido (°C)	Temp. Amb. (°C)
da	3/8''	13	40	3	-10	-10
a	1''	25	117	5	140	50

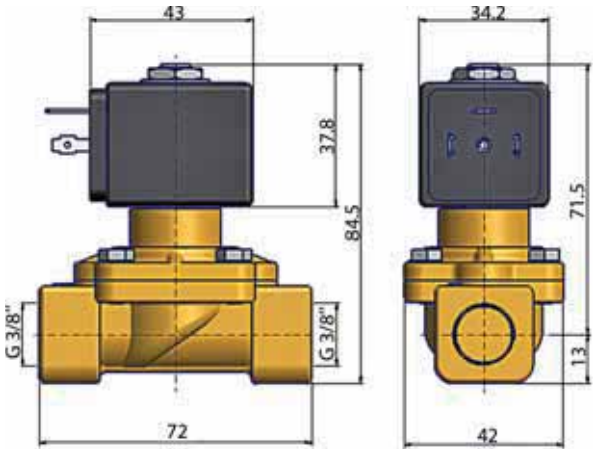

Disegno 004

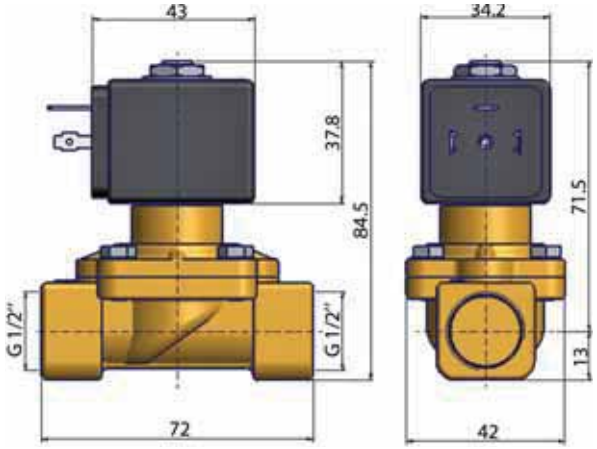

Disegno 003

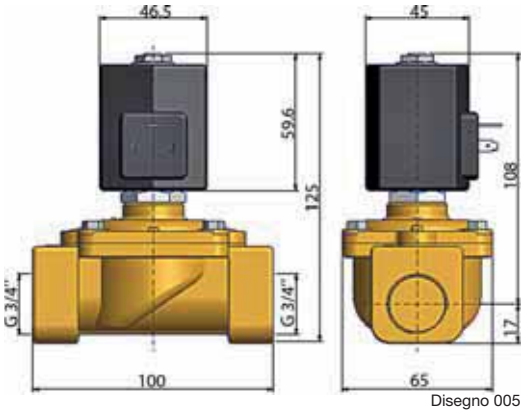

Disegno 005

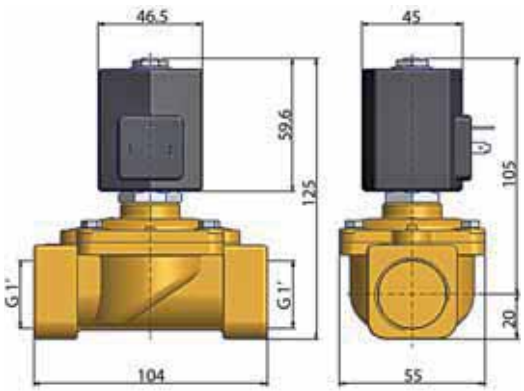

Disegno 006

2/2 VALVOLE PER ARIA SECCA O LUBRIFICATA, GAS NEUTRI E LIQUIDI

MAGNALIFT

OTTONE
MONTAGGIO SU RACCORDI
NORMALMENTE CHIUSA

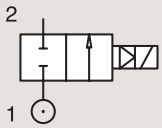

Raccordi	Orifizio Ø	Fattore Portata			Max. Pressione differenziale			Temp. Fluido		Tenuta	Valvola PARKER LUCIFER®			Potenza		Gruppo Elettrico	Disegno nr.
					Min	Mass		Min	Mass		Valvola	Housing	Bobina				
BSP	mm	Kv l/min	KV m³/h	Qn l/min	bar	AC bar	DC bar	°C	°C					AC W	DC W		
3/8"	15	65	3.9	4500	0	16	-	-10	100	NBR	**221G13**	**2995**	**481865**	8	-	2.0	3732
	15	65	3.9	4500	0	16	-	-10	100	NBR	**221G13**	**4270**	**481000**	8	-	2.0	3732
	15	65	3.9	4500	0	16	16	-10	100	NBR	**221G13**	**4270**	**486265**	14	14	2.0	3732
	15	65	3.9	4500	0	16	-	0	100	FKM	**221G23** [1]	**2995**	**481865**	8	-	2.0	3732
	15	65	3.9	4500	0	16	-	0	120	FKM	**221G23** [1]	**4270**	**481000**	8	-	2.0	3732
	15	65	3.9	4500	0	20	7	0	140	FKM	**221G23** [1]	**4270**	**486265**	14	14	2.0	3732
	15	65	3.9	4500	0	-	10	-10	100	FKM	**221G2330** [123]	**2995**	**481865**	-	9	2.1	3732
	15	65	3.9	4500	0	10	10	-10	100	FKM	**221G2330** [123]	**-**	**492070**	9	8	2.1	3732
	15	65	3.9	4500	0	10	10	-10	100	FKM	**221G2330** [123]	**-**	**492190**	11	9	2.1	3732
1/2"	15	65	3.9	4500	0	16	-	-10	100	NBR	**221G15**	**2995**	**481865**	8	-	2.0	3732
	15	65	3.9	4500	0	16	-	-10	100	NBR	**221G15**	**4270**	**481000**	8	-	2.0	3732
	15	65	3.9	4500	0	16	7	-10	100	NBR	**221G15**	**4270**	**486265**	14	14	2.0	3732
	15	65	3.9	4500	0	-	10	-10	100	NBR	**221G1530** [23]	**2995**	**481865**	-	9	2.1	3732
	15	65	3.9	4500	0	10	10	-10	120	NBR	**221G1530** [23]	**-**	**492070**	9	8	2.1	3732
	15	65	3.9	4500	0	10	10	-10	120	NBR	**221G1530** [23]	**-**	**492190**	11	9	2.1	3732
	15	65	3.9	4500	0	16	-	0	100	FKM	**221G25** [1]	**2995**	**481865**	8	-	2.0	3732
	15	65	3.9	4500	0	16	-	0	120	FKM	**221G25** [1]	**4270**	**481000**	8	-	2.0	3732
	15	65	3.9	4500	0	20	7	0	140	FKM	**221G25** [1]	**4270**	**486265**	14	14	2.0	3732
	15	65	3.9	4500	0	-	10	-10	100	FKM	**221G2530** [123]	**2995**	**481865**	-	9	2.1	3732
	15	65	3.9	4500	0	10	10	-10	100	FKM	**221G2530** [123]	**-**	**492070**	9	8	2.1	3732
	15	65	3.9	4500	0	10	10	-10	100	FKM	**221G2530** [123]	**-**	**492190**	11	9	2.1	3732

Nota:

1. Valvole compatibili unicamente con olio idraulico e aria/gas neutri
2. Valvole con la cui designazione termina con 30 o 31 sono compatibile con le parti elettriche elencate o con le bobine del gruppo 2.1 in tensione DC
3. Pilota con tenuta in FKM

In questa pagina	Raccordi	Orifizio (mm)	Kv (l/min)	Press. Diff. (bar)	Temp. Fluido (°C)	Temp. Amb. (°C)
da	3/8"	15	65	7	-10	-10
a	1/2"	15	65	20	140	50

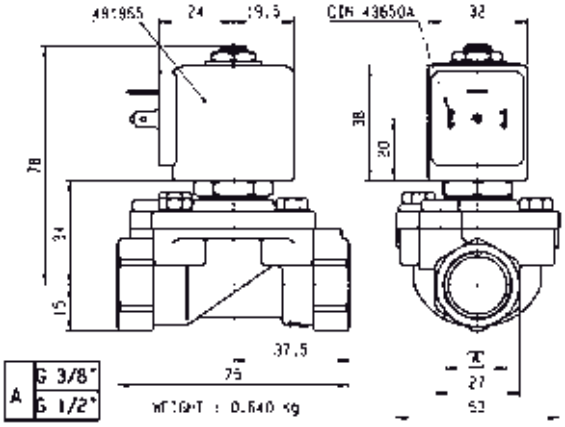

Disegno 3732

2/2 VALVOLE PER ARIA SECCA O LUBRIFICATA, GAS NEUTRI E LIQUIDI

MAGNALIFT

OTTONE

MONTAGGIO SU RACCORDI

NORMALMENTE CHIUSA

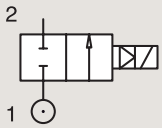

Raccordi	Orifizio Ø	Fattore Portata			Pressione differenziale			Temp. Fluido		Tenuta	Valvola PARKER LUCIFER®			Potenza		Gruppo Elettrico	Disegno nr.
					Min	Mass		Min	Mass		Valvola	Housing	Bobina				
BSP	mm	Kv l/min	KV m³/h	Qn l/min	bar	AC bar	DC bar	°C	°C					AC W	DC W		
3/4"	15	80	4.8	6000	0	16	-	-10	100	NBR	221G16 [4]	2995	481865	8	-	2.0	3444
	15	80	4.8	6000	0	16	-	-10	100	NBR	221G16 [4]	4270	481000	8	-	2.0	3444
	15	80	4.8	6000	0	7	7	-10	100	NBR	221G16 [4]	4270	486265	14	14	2.0	3444
	15	80	4.8	6000	0	16	-	-10	100	NBR	221G1610 [1]	2995	481865	8	-	2.0	3444
	15	80	4.8	6000	0	16	-	-10	100	NBR	221G1610 [1]	4270	481000	8	-	2.0	3444
	15	80	4.8	6000	0	16	7	-10	100	NBR	221G1610 [1]	4270	486265	14	14	2.0	3444
	15	80	4.8	6000	0	10	10	-10	100	NBR	221G1630 [34]	2995	481865	8	9	2.1	3444
	15	80	4.8	6000	0	10	10	-25	40	NBR	221G1630 [34]	-	492070	9	8	2.1	3444
	15	80	4.8	6000	0	10	10	-25	40	NBR	221G1630 [34]	-	492190	11	9	2.1	3444
	15	80	4.8	6000	0	10	10	-10	100	NBR	221G1631 [134]	2995	481865	8	9	2.1	3444
	15	80	4.8	6000	0	10	10	-25	40	NBR	221G1631 [134]	-	492070	9	8	2.1	3444
	15	80	4.8	6000	0	10	10	-25	40	NBR	221G1631 [134]	-	492190	11	9	2.1	3444
	15	80	4.8	6000	0	16	-	0	100	FKM	221G26 [2]	2995	481865	8	-	2.0	3444
	15	80	4.8	6000	0	16	-	0	120	FKM	221G26 [2]	4270	481000	8	-	2.0	3444
	15	80	4.8	6000	0	20	7	0	140	FKM	221G26 [2]	4270	486265	14	14	2.0	3444
	15	80	4.8	6000	0	-	10	-10	100	FKM	221G2630 [23]	2995	481865	-	9	2.1	3444
	15	80	4.8	6000	0	10	10	-25	40	FKM	221G2630 [23]	-	492070	9	8	2.1	3444
	15	80	4.8	6000	0	10	10	-25	40	FKM	221G2630 [23]	-	492190	11	9	2.1	3444

Nota:

1. Con selezionatore a 4 posizioni per controllo tempo di chiusura
2. Valvole compatibili unicamente con olio idraulico e aria/gas neutri
3. Valvole con la cui designazione termina con 30 o 31 sono compatibile con le parti elettriche elencate o con le bobine del gruppo 2.1 in tensione DC
4. Pilota con tenuta in FKM

In questa pagina	Raccordi	Orifizio (mm)	Kv (l/min)	Press. Diff. (bar)	Temp. Fluido (°C)	Temp. Amb. (°C)
da	3/8''	15	80	7	-25	-10
a	3/8''	15	80	20	140	50

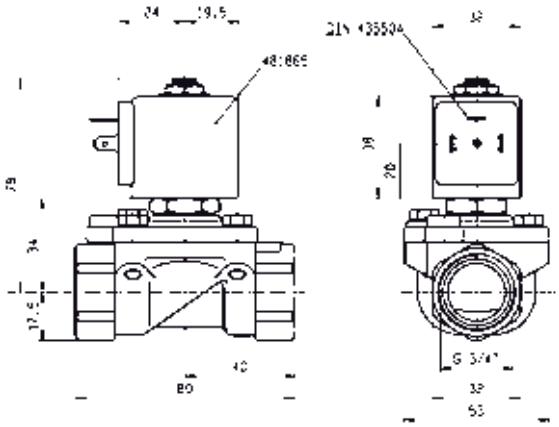

Disegno 3444

2/2 VALVOLE PER ARIA SECCA O LUBRIFICATA, GAS NEUTRI E LIQUIDI

MAGNALIFT

OTTONE

MONTAGGIO SU RACCORDI

NORMALMENTE CHIUSA

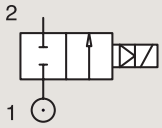

Raccordi	Orifizio Ø	Fattore Portata			Pressione differenziale			Temp. Fluido		Tenuta	Valvola PARKER LUCIFER®			Potenza		Gruppo Elettrico	Disegno nr.
					Min	Mass		Min	Mass		Valvola	Housing	Bobina				
BSP	mm	Kv l/min	KV m³/h	Qn l/min	bar	AC bar	DC bar	°C	°C					AC W	DC W		
1"	15	80	4.8	6000	0	16	-	-10	100	NBR	221G17	2995	481865	8	-	2.0	3445
	15	80	4.8	6000	0	16	1	-10	100	NBR	221G17	4270	481000	8	8	2.0	3445
	15	80	4.8	6000	0	16	7	-10	100	NBR	221G17	4270	486265	14	14	2.0	3445
	15	80	4.8	6000	0	16	-	-10	100	NBR	221G1710 [1]	2995	481865	8	-	2.0	3445
	15	80	4.8	6000	0	16	-	-10	100	NBR	221G1710 [1]	4270	481000	8	-	2.0	3445
	15	80	4.8	6000	0	16	7	-10	100	NBR	221G1710 [1]	4270	486265	14	14	2.0	3445
	15	80	4.8	6000	0	10	10	-10	100	NBR	221G1730 [234]	2995	481865	8	9	2.1	3445
	15	80	4.8	6000	0	10	10	-10	120	NBR	221G1730 [234]	-	492070	9	8	2.1	3445
	15	80	4.8	6000	0	10	10	-10	120	NBR	221G1730 [234]	-	492190	11	9	2.1	3445
	15	80	4.8	6000	0	16	-	0	100	FKM	221G27 [2]	2995	481865	8	-	2.0	3445
	15	80	4.8	6000	0	16	-	0	120	FKM	221G27 [2]	4270	481000	8	-	2.0	3445
	15	80	4.8	6000	0	20	7	0	120	FKM	221G27 [2]	4270	486265	14	14	2.0	3445
	15	80	4.8	6000	0	-	10	0	100	FKM	221G2730 [23]	2995	481865	-	9	2.1	3445
	15	80	4.8	6000	0	10	10	-10	65	FKM	221G2730 [23]	-	492070	9	8	2.1	3445
	15	80	4.8	6000	0	10	10	-10	75	FKM	221G2730 [23]	-	492190	11	9	2.1	3445
	25	170	10.2	14000	0	16	-	-10	100	NBR	221G21	2995	481865	8	-	2.0	3448
	25	170	10.2	14000	0	16	-	-10	100	NBR	221G21	4270	481000	8	-	2.0	3448
	25	170	10.2	14000	0	16	6	-10	100	NBR	221G21	4270	486265	14	14	2.0	3448
	25	160	9.6	14000	0	16	-	0	100	FKM	221G2106 [2]	2995	481865	8	-	2.0	3448
	25	160	9.6	14000	0	16	-	0	120	FKM	221G2106 [2]	4270	481000	8	-	2.0	3448
	25	160	9.6	14000	0	16	6	0	120	FKM	221G2106 [2]	4270	486265	14	14	2.0	3448
	25	160	9.6	14000	0	16	-	-10	100	NBR	221G2110 [1]	2995	481865	8	-	2.0	3448
	25	160	9.6	14000	0	16	-	-10	100	NBR	221G2110 [1]	4270	481000	8	-	2.0	3448
	25	160	9.6	14000	0	16	6	-10	100	NBR	221G2110 [1]	4270	486265	14	14	2.0	3448
	25	170	10.2	14000	0	-	10	-10	100	NBR	221G2130 [234]	2995	481865	-	9	2.1	3448
	25	170	10.2	14000	0	10	10	-25	40	NBR	221G2130 [234]	-	492070	9	8	2.1	3448
	25	170	10.2	14000	0	10	10	-25	40	NBR	221G2130 [234]	-	492190	11	9	2.1	3448
	25	170	10.2	14000	0	-	10	0	100	FKM	221G2136 [2]	2995	481865	-	9	2.0	3448
	25	170	10.2	14000	0	-	10	0	100	FKM	221G2136 [2]	4270	481000	-	8	2.0	3448

Nota:

1. Con selezionatore a 4 posizioni per controllo tempo di chiusura
2. Valvole compatibili unicamente con olio idraulico e aria/gas neutri
3. Valvole con la cui designazione termina con 30 o 31 sono compatibile con le parti elettriche elencate o con le bobine del gruppo 2.1 in tensione DC
4. Pilota con tenuta in FKM

In questa pagina	Raccordi	Orifizio (mm)	Kv (l/min)	Press. Diff. (bar)	Temp. Fluido (°C)	Temp. Amb. (°C)
da	1''	15	80	1	-25	-10
a	1''	25	170	20	120	50

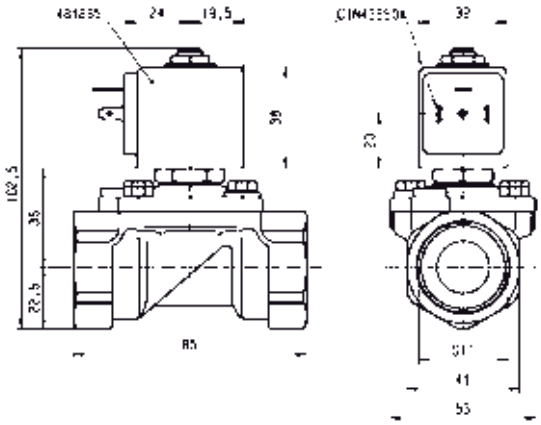

Disegno 3445

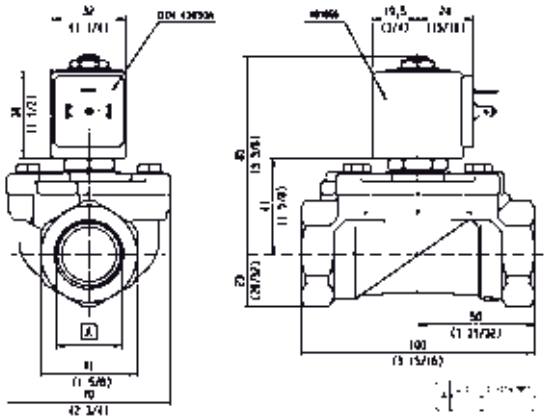

Disegno 3448

2/2 VALVOLE PER ARIA SECCA O LUBRIFICATA, GAS NEUTRI E LIQUIDI

SERVOPILOTATA

Impianti Commerciali

Impianti Industriali

OTTONE
MONTAGGIO SU RACCORDI
NORMALMENTE CHIUSA

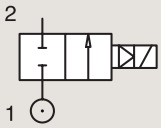

Raccordi	Orifizio Ø	Fattore portata			Pressione differenziale			Temp. Fluido		Tenuta	Valvola PARKER			Potenza		Gruppo Electtrico	Disegno nr.
					Min	Mass		Min	Mass								
BSP	mm	Kv l/min	KV m^3/h	Qn m^3/h	bar	AC bar	DC bar	°C	°C		Codice di Ordinazione	Modello valvola	Modello bobina	AC W	DC W		
3/8"	13	33	2	-	0.5	16	-	-10	90	NBR	366501 [1]	PM168.1IN	ZB09	9	-	20.1/20.2	048
	13	33	2	-	0.5	-	16	-10	90	NBR	366501 [1]	PM168.1IN	ZB12	-	12	20.1/20.2	048
	13	50	3	-	0.35	15	-	-10	90	NBR	366770	PM173IN	WB4.5	4.5	-	1.3	054
	13	50	3	-	0.35	-	12	-10	90	NBR	366770	PM173IN	WB5.0	-	5	1.3	054
1/2"	13	42	2.5	-	0.5	16	-	-10	90	NBR	366511 [1]	PM168.1AN	ZB09	9	-	20.1/20.2	046
	13	42	2.5	-	0.5	-	16	-10	90	NBR	366511 [1]	PM168.1AN	ZB12	-	12	20.1/20.2	046
	13	58	3.5	-	0.35	15	-	-10	90	NBR	366775	PM173AN	WB4.5	4.5	-	1.3	053
	13	58	3.5	-	0.35	-	12	-10	90	NBR	366775	PM173AN	WB5.0	-	5	1.3	053
3/4"	20	117	7	-	0.5	16	-	-10	90	NBR	366521 [1]	PM168.1CN	ZB09	9	-	20.1/20.2	046
	20	117	7	-	0.5	-	16	-10	90	NBR	366521 [1]	PM168.1CN	ZB12	-	12	20.1/20.2	046
1"	25	133	8	-	0.5	16	-	-10	90	NBR	366531 [1]	PM168.1DN	ZB09	9	-	20.1/20.2	047
	25	133	8	-	0.5	-	16	-10	90	NBR	366531 [1]	PM168.1DN	ZB12	-	12	20.1/20.2	047

Nota:

1. Valvole compatibili unicamente con aria e gas neutri

In questa pagina	Raccordi	Orifizio (mm)	Kv (l/min)	Press. Diff. (bar)	Temp. Fluido (°C)	Temp. Amb. (°C)
da	3/8''	13	33	12	-10	-10
a	1''	25	133	16	90	50

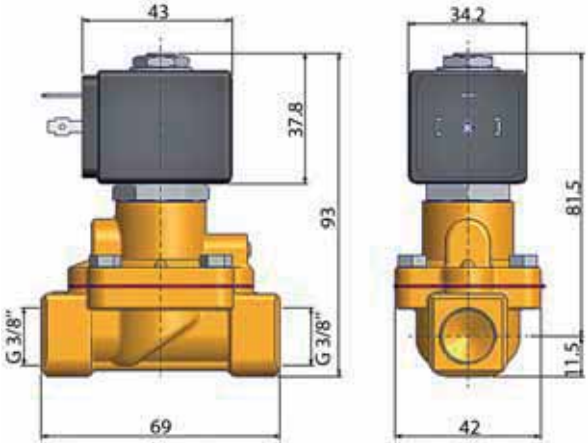

Disegno 048

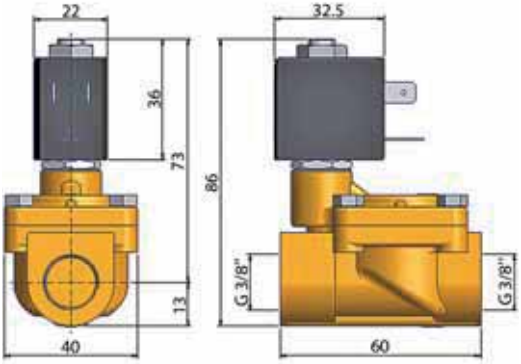

Disegno 054

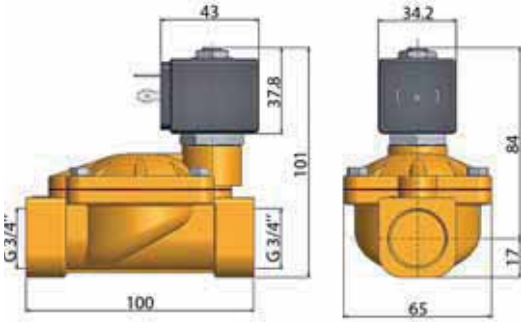

Disegno 046

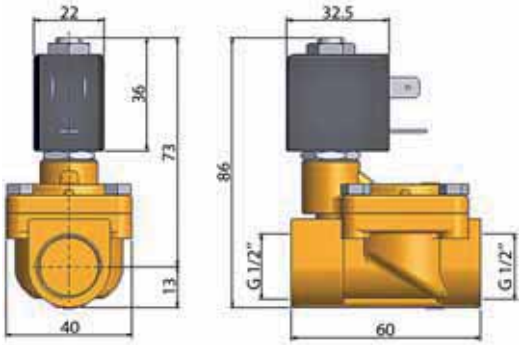

Disegno 053

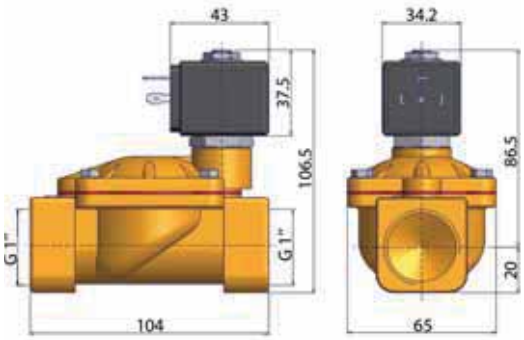

Disegno 047

2/2 VALVOLE PER ARIA SECCA O LUBRIFICATA, GAS NEUTRI E LIQUIDI
SERVOPILOTATA

OTTONE
MONTAGGIO SU RACCORDI
NORMALMENTE CHIUSA

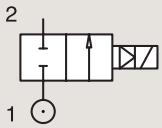

Raccordi	Orifizio Ø	Fattore Portata			Pressione differenziale			Temp. Fluido		Tenuta	Valvola PARKER LUCIFER®			Potenza		Gruppo Elettrico	Disegno nr.
					Min	Mass		Min	Mass		Valvola	Housing	Bobina				
BSP	mm	Kv l/min	KV m³/h	Qn l/min	bar	AC bar	DC bar	°C	°C					AC W	DC W		
1/4"	8	36	2.16	1600	0.3	40	25	-10	100	NBR	E321H11 [234]	2995	481865	8	9	2.0	3523
	8	36	2.16	1600	0.3	40	30	-10	100	NBR	E321H11 [234]	4270	481000	8	8	2.0	3523
	8	36	2.16	1600	0.3	40	40	-10	100	NBR	E321H11 [234]	4270	486265	14	14	2.0	3523
	11	28	1.68	1800	0.2	10	3	-10	100	NBR	E321K10	2995	481865	8	9	2.0	3429
	11	28	1.68	1800	0.2	10	4	-10	100	NBR	E321K10	4270	481000	8	8	2.0	3429
	12	30	1.8	2150	0.3	10	10	-10	100	NBR	321K31	8993	481180	4	5	1.1	7093
	12	30	1.8	2150	0.3	10	7	-10	75	NBR	321K31	8993	488980	2	2.5	1.1	7093
	12	30	1.8	2150	0.3	10	10	-10	100	FKM	321K3106	8993	481180	4	5	1.1	7093
	12	30	1.8	2150	0.3	10	7	-10	75	FKM	321K3106	8993	488980	2	2.5	1.1	7093
	12	32	1.92	2150	0.3	12	12	-10	100	FKM	321K4156 [1]	2995	481865	8	9	2.1/3.0	7094
	12	32	1.92	2150	0.3	12	12	-10	120	FKM	321K4156 [1]	4270	481000	8	8	2.1/3.0	7094

Nota:

1. Con comando manuale
2. Con selezionatore a 4 posizioni per controllo tempo di chiusura
3. Pilota con tenuta in Rubino sintetico
4. Pressione differenziale minima = 0.3 bar apertura e 0 bar chiusura

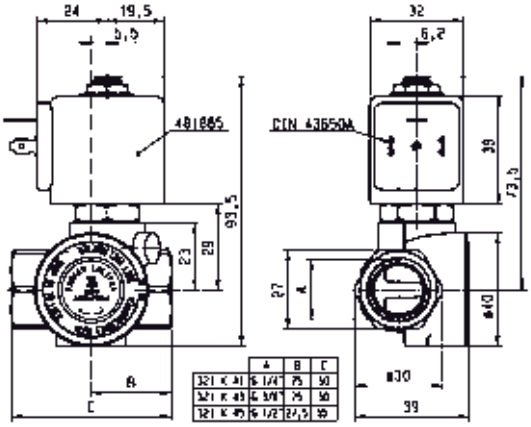

Disegno 7094

In questa pagina	Raccordi	Orifizio (mm)	Kv (l/min)	Press. Diff. (bar)	Temp. Fluido (°C)	Temp. Amb. (°C)
da	1/4"	8	28	3	-10	-10
a	1/4"	12	36	40	120	50

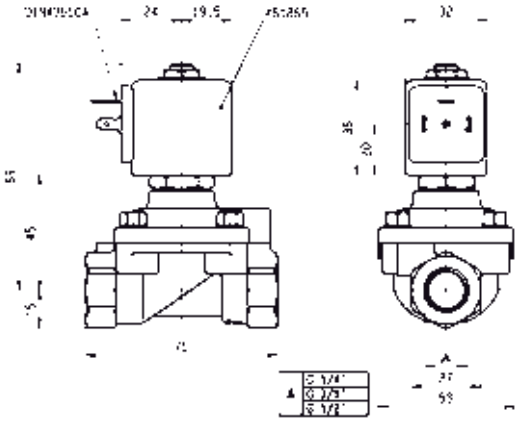

Disegno 3523

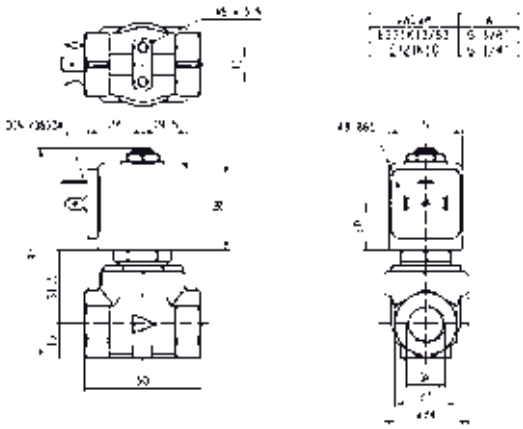

Disegno 3429

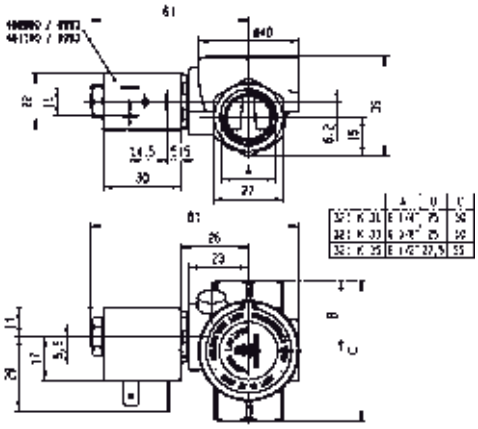

Disegno 7093

2/2 VALVOLE PER ARIA SECCA O LUBRIFICATA, GAS NEUTRI E LIQUIDI
SERVOPILOTATA

OTTONE
MONTAGGIO SU RACCORDI
NORMALMENTE CHIUSA

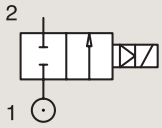

Raccordi	Orifizio Ø	Fattore Portata			Pressione differenziale			Temp. Fluido		Tenuta	Valvola PARKER LUCIFER®			Potenza		Gruppo Elettrico	Disegno nr.
					Min	Mass		Min	Mass		Valvola	Housing	Bobina				
BSP	mm	Kv l/min	KV m³/h	Qn l/min	bar	AC bar	DC bar	°C	°C					AC W	DC W		
3/8"	11	50	3	2800	0.3	40	25	-10	100	NBR	E321H13 [234]	2995	481865	8	9	2.0	3521
	11	50	3	2800	0.3	40	30	-10	100	NBR	E321H13 [234]	4270	481000	8	8	2.0	3521
	11	50	3	2800	0.3	40	40	-10	100	NBR	E321H13 [234]	4270	486265	14	14	2.0	3521
	11	36	2.16	2500	0.2	10	4	-10	100	NBR	E321K13	4270	481000	8	8	2.0	3429
	11	36	2.16	2500	0.2	10	10	-10	100	NBR	E321K13	4270	486265	14	14	2.0	3429
	11	36	2.16	2500	0.2	10	-	-10	100	NBR	E321K1314	2995	483466	8 to 11	-	2.0	3429
	11	36	2.16	2500	0.2	10	10	-10	100	NBR	E321K1314	4270	486265	14	14	2.0	3429
	12	45	2.7	3050	0.3	10	10	-10	100	NBR	321K33	8993	481180	4	5	1.1	7093
	12	45	2.7	3050	0.3	10	7	-10	75	NBR	321K33	8993	488980	2	2.5	1.1	7093
	12	45	2.7	3050	0.3	10	10	-10	100	FKM	321K3306 [4]	8993	481180	4	5	1.1	7093
	12	45	2.7	3050	0.3	10	7	-10	75	FKM	321K3306 [4]	8993	488980	2	2.5	1.1	7093
	12	45	2.7	3050	0.3	12	12	-10	100	FKM	321K4356 [1]	2995	481865	8	9	2.1/3.0	7094
	12	45	2.7	3050	0.3	12	12	-10	120	FKM	321K4356 [1]	4270	481000	8	8	2.1/3.0	7094

Nota:

1. Con comando manuale
2. Con selezionatore a 4 posizioni per controllo tempo di chiusura
3. Pilota con tenuta in Rubino sintetico
4. Pressione differenziale minima = 0.3 bar apertura e 0 bar chiusura

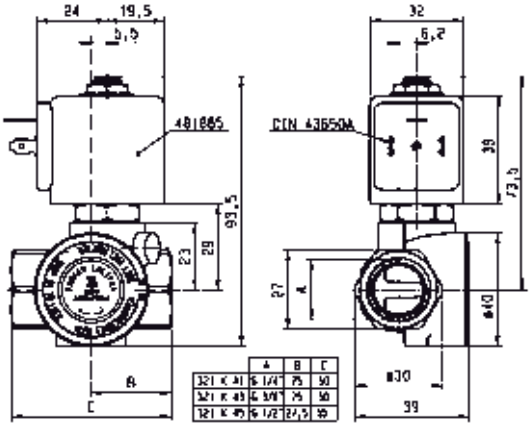

Disegno 7094

In questa pagina	Raccordi	Orifizio (mm)	Kv (l/min)	Press. Diff. (bar)	Temp. Fluido (°C)	Temp. Amb. (°C)
da	3/8''	11	36	4	-10	-10
a	3/8''	12	50	40	120	50

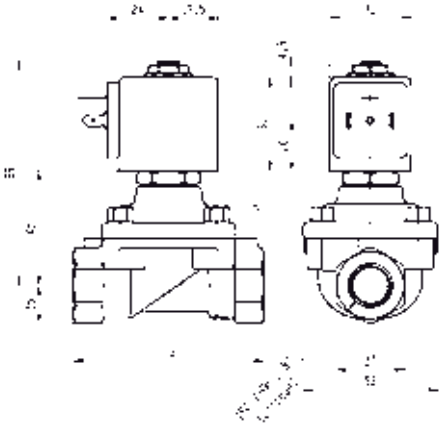

Disegno 3521

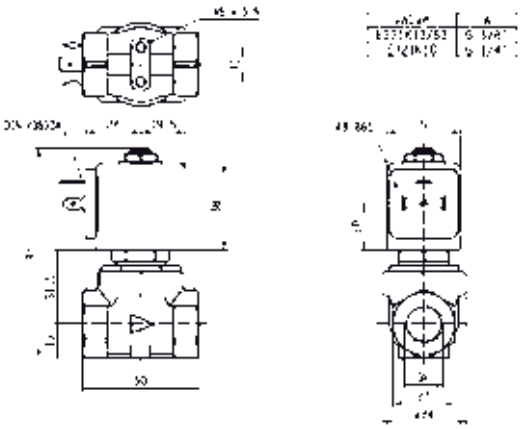

Disegno 3429

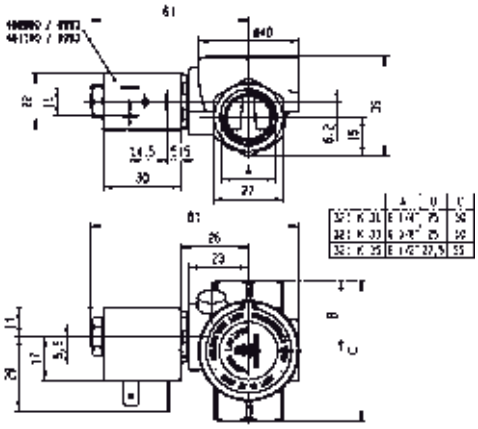

Disegno 7093

2/2 VALVOLE PER ARIA SECCA O LUBRIFICATA, GAS NEUTRI E LIQUIDI

SERVOPILOTATA

OTTONE

MONTAGGIO SU RACCORDI

NORMALMENTE CHIUSA

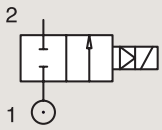

Raccordi	Orifizio Ø	Fattore Portata			Pressione differenziale			Temp. Fluido		Tenuta	Valvola PARKER LUCIFER®			IS	Potenza		Gruppo Elettrico	Disegno nr.
					Min	Mass		Min	Mass		Valvola	Housing	Bobina					
BSP	mm	Kv l/min	KV m³/h	Qn l/min	bar	AC bar	DC bar	°C	°C						AC W	DC W		
1/2"	11	36	2.16	2500	0.2	10	3	-10	100	NBR	**E321K15**	**2995**	**481865**		8	9	2.0	3427
	11	36	2.16	2500	0.2	10	10	-10	120	NBR	**E321K15**	**4270**	**486265**		14	14	2.0	3427
	11	36	2.16	2500	0.2	10	3	-10	100	NBR	**E321K1514**	**2995**	**481865**		8	9	2.0	3427
	11	36	2.16	2500	0.2	10	4	-10	120	NBR	**E321K1514**	**-**	**483371**		8	8	2.0	3427
	11	36	2.16	2500	0.2	10	3	-10	100	NBR	**E321K25**	**2995**	**481865**		8	9	2.0	3427
	11	36	2.16	2500	0.2	4	4	-10	120	NBR	**E321K25**	**-**	**492070**		9	8	2.0	3427
	12	50	3	3400	0.3	10	10	-10	100	NBR	**321K35**	**8993**	**481180**		4	5	1.1	7093
	12	50	3	3400	0.3	10	7	-10	75	NBR	**321K35**	**8993**	**488980**		2	2.5	1.1	7093
	12	50	3	3400	0.3	10	10	-10	100	FKM	**321K3506**	**8993**	**481180**		4	5	1.1	7093
	12	50	3	3400	0.3	10	7	-10	75	FKM	**321K3506**	**8993**	**488980**		2	2.5	1.1	7093
	15	60	3.6	3150	0.3	-	10	-10	100	NBR	**321H1590**	**2995**	**483580.01**	*	-	0.5 to 3	7.0/8.0	3978
	15	60	3.6	3150	0.3	-	10	-10	100	NBR	**321H1590**	**-**	**488660.01**	*	-	0.3 to 3	7.0/8.0	3978
	15	60	3.6	3150	0.3	-	10	-10	100	NBR	**321H1590**	**-**	**495910**	*	-	0.3 to 3	7.0/8.0	3978
	15	60	3.6	3150	1.5	40	40	-10	50	PUR	**321H35** [2]	**2995**	**481865**		8	9	2.1	3522
	15	60	3.6	3150	1.5	40	40	-10	50	PUR	**321H35** [2]	**4270**	**481000**		8	8	2.1	3522
	15	60	3.6	3150	0.3	40	25	-10	100	NBR	**E321H15** [123]	**2995**	**481865**		8	9	2.0	3522
	15	60	3.6	3150	0.3	40	30	-10	100	NBR	**E321H15** [123]	**4270**	**481000**		8	8	2.0	3522
	15	60	3.6	3150	0.3	40	40	-10	100	NBR	**E321H15** [123]	**4270**	**486265**		14	14	2.0	3522

Nota:

1. Con selezionatore a 4 posizioni per controllo tempo di chiusura
2. Pilota con tenuta in Rubino sintetico
3. Pressione differenziale minima = 0.3 bar apertura e 0 bar chiusura

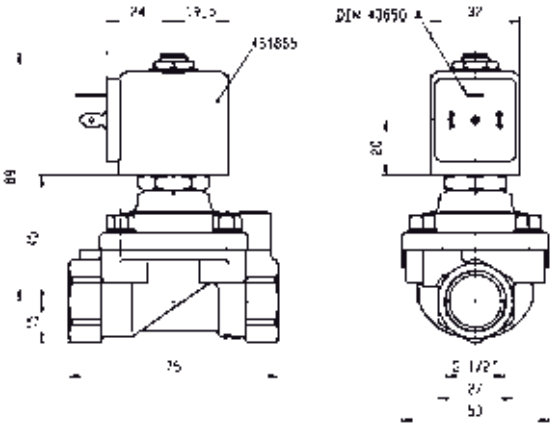

Disegno 3522

In questa pagina	Raccordi	Orifizio (mm)	Kv (l/min)	Press. Diff. (bar)	Temp. Fluido (°C)	Temp. Amb. (°C)
da	1/2"	11	36	3	-10	-10
a	1/2"	15	60	40	120	50

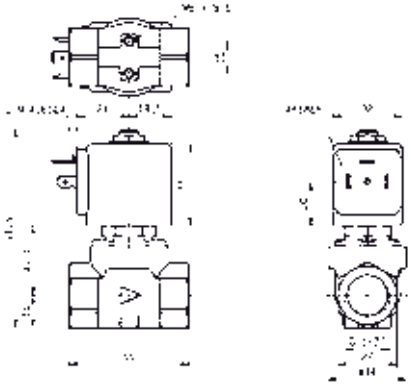

Disegno 3427

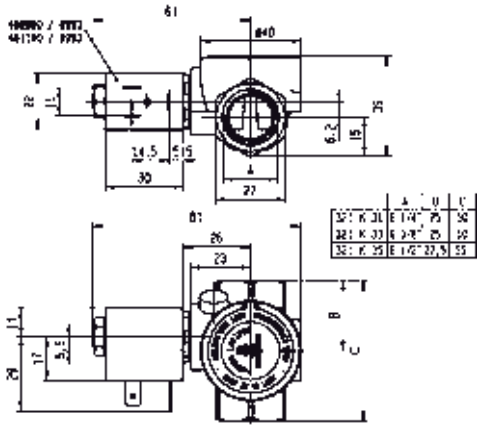

Disegno 7093

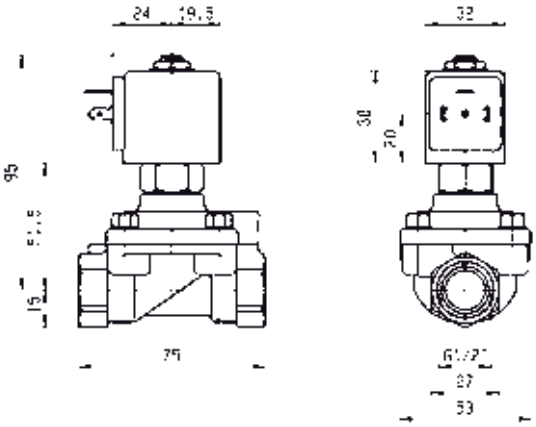

Disegno 3978

2/2 VALVOLE PER ARIA SECCA O LUBRIFICATA, GAS NEUTRI E LIQUIDI

SERVOPILOTATA

OTTONE

MONTAGGIO SU RACCORDI

NORMALMENTE CHIUSA

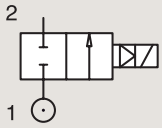

Raccordi	Orifizio Ø	Fattore Portata			Pressione differenziale			Temp. Fluido		Tenuta	Valvola PARKER LUCIFER®			Potenza		Gruppo Elettrico	Disegno nr.
					Min	Mass		Min	Mass		Valvola	Housing	Bobina				
BSP	mm	Kv l/min	KV m³/h	Qn l/min	bar	AC bar	DC bar	°C	°C					AC W	DC W		
3/4"	15	-	-	3550	1.5	40	40	-10	50	PUR	**321H36** [1]	**2995**	**481865**	8	9	2.1	3696
	15	-	-	3550	1.5	40	40	-10	50	PUR	**321H36** [1]	**4270**	**481000**	8	8	2.1	3696
	18	100	6	9400	0.3	10	10	-10	100	NBR	**321K36**	**8993**	**481180**	4	5	1.1	7097
	18	100	6	9400	0.3	10	7	-10	75	NBR	**321K36**	**8993**	**488980**	2	2.5	1.1	7097
	18	100	6	9400	0.3	10	10	-10	100	FKM	**321K3606**	**8993**	**481180**	4	5	1.1	7097
	18	100	6	9400	0.3	10	7	-10	75	FKM	**321K3606**	**8993**	**488980**	2	2.5	1.1	7097
	20	135	8.1	9500	0.3	16	16	-10	100	NBR	**E321G36**	**2995**	**481865**	8	9	2.0	3442
	20	135	8.1	9500	0.3	16	16	-10	100	NBR	**E321G36**	**4270**	**481000**	8	8	2.0	3442
	20	135	8.1	9500	0.3	16	16	-10	100	FKM	**E321G3606**	**2995**	**481865**	8	9	2.0/14.1	3442
	20	135	8.1	9500	0.3	16	16	-10	120	FKM	**E321G3606**	**4270**	**481000**	8	8	2.0/14.1	3442
	20	135	8.1	9500	0.3	16	16	-10	120	FKM	**E321G3606**	**4270**	**486265**	14	14	2.0/14.1	3442

Nota:

1. Pilota con tenuta in Rubino sintetico

In questa pagina	Raccordi	Orifizio (mm)	Kv (l/min)	Press. Diff. (bar)	Temp. Fluido (°C)	Temp. Amb. (°C)
da	3/4''	15	-	7	-10	-10
a	3/4''	20	135	40	120	50

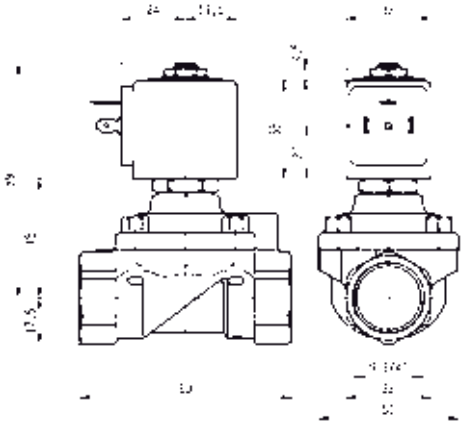

Disegno 3696

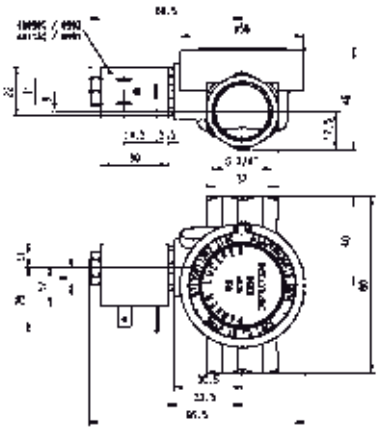

Disegno 7097

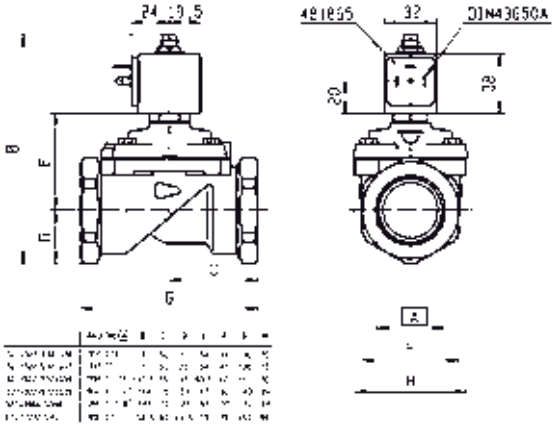

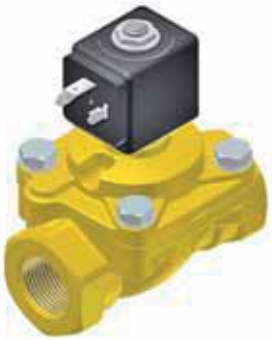

Disegno 3442

2/2 VALVOLE PER ARIA SECCA O LUBRIFICATA, GAS NEUTRI E LIQUIDI

SERVOPILOTATA

OTTONE

MONTAGGIO SU RACCORDI

NORMALMENTE CHIUSA

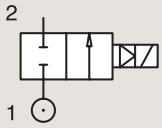

Raccordi	Orifizio Ø	Fattore Portata			Pressione differenziale			Temp. Fluido		Tenuta	Valvola PARKER LUCIFER®			IS	Potenza		Gruppo Elettrico	Disegno nr.
					Min	Mass		Min	Mass		Valvola	Housing	Bobina					
BSP	mm	Kv l/min	KV m³/h	Qn l/min	bar	AC bar	DC bar	°C	°C						AC W	DC W		
1"	18	110	6.6	10150	0.3	10	10	-10	100	NBR	**321K37**	**8993**	**481180**		4	5	1.1	7098
	18	110	6.6	10150	0.3	10	7	-10	75	NBR	**321K37**	**8993**	**488980**		2	2.5	1.1	7098
	18	110	6.6	10150	0.3	10	10	-10	100	FKM	**321K3706**	**8993**	**481180**		4	5	1.1	7098
	18	110	6.6	10150	0.3	10	7	-10	75	FKM	**321K3706**	**8993**	**488980**		2	2.5	1.1	7098
	25	185	11.1	14100	0.3	-	10	-10	75	NBR	**321G3790**	**2995**	**483580.01**	*	-	0.5 to 3	7.0/8.0	3442
	25	185	11.1	14100	0.3	-	10	-10	75	NBR	**321G3790**	**-**	**488660.01**	*	-	0.3 to 3	7.0/8.0	3442
	25	185	11.1	14100	0.3	-	10	-10	75	NBR	**321G3790**	**-**	**495910**	*	-	0.3 to 3	7.0/8.0	3442
	25	180	10.8	14000	0.3	16	16	-10	100	NBR	**E321G37**	**2995**	**481865**		8	9	2.0	3442
	25	180	10.8	14000	0.3	16	16	-10	100	NBR	**E321G37**	**4270**	**481000**		8	8	2.0	3442
	25	180	10.8	14000	0.3	16	16	-10	100	FKM	**E321G3706**	**2995**	**481865**		8	9	2.0/14.1	3442
	25	180	10.8	14000	0.3	16	16	-10	120	FKM	**E321G3706**	**4270**	**481000**		8	8	2.0/14.1	3442
	25	180	10.8	14000	0.3	16	16	-10	120	FKM	**E321G3706**	**4270**	**486265**		14	14	2.0/14.1	3442
	28	270	16.2	18000	0.3	16	16	-10	100	NBR	**E321G38**	**2995**	**481865**		8	9	2.0	3442
	28	270	16.2	18000	0.3	16	16	-10	100	NBR	**E321G38**	**4270**	**481000**		8	8	2.0	3442
	28	270	16.2	18000	0.3	16	16	-10	100	FKM	**E321G3806**	**2995**	**481865**		8	9	2.0	3442
	28	270	16.2	18000	0.3	16	16	-10	120	FKM	**E321G3806**	**4270**	**481000**		8	8	2.0	3442
	28	270	16.2	18000	0.3	16	16	-10	100	FKM	**E321G3806**	**4270**	**486265**		14	14	2.0	3442

In questa pagina	Raccordi	Orifizio (mm)	Kv (l/min)	Press. Diff. (bar)	Temp. Fluido (°C)	Temp. Amb. (°C)
da	1''	18	110	7	-10	-10
a	1''	28	270	16	120	50

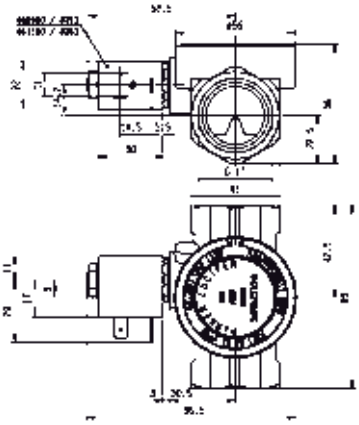

Disegno 7098

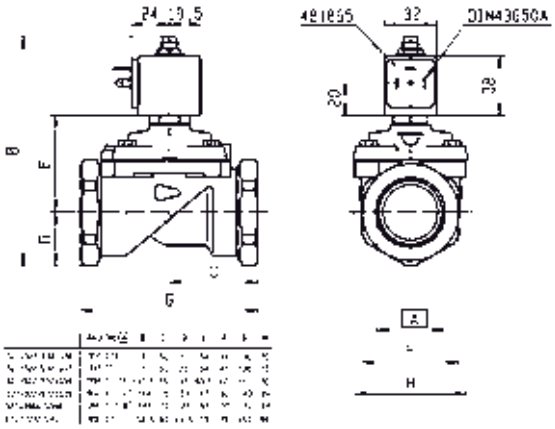

Disegno 3442

2/2 VALVOLE PER ARIA SECCA O LUBRIFICATA, GAS NEUTRI E LIQUIDI

SERVOPILOTATA

OTTONE

MONTAGGIO SU RACCORDI

NORMALMENTE CHIUSA

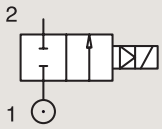

Raccordi	Orifizio Ø	Fattore Portata			Pressione differenziale			Temp. Fluido		Tenuta	Valvola PARKER LUCIFER®			IS	Potenza		Gruppo Elettrico	Disegno nr.
					Min	Mass		Min	Mass		Valvola	Housing	Bobina					
BSP	mm	Kv l/min	KV m³/h	Qn l/min	bar	AC bar	DC bar	°C	°C						AC W	DC W		
1 1/2"	40	425	25.5	31500	0.5	-	10	-10	75	NBR	**321G3990**	**2995**	**483580.01**	*	-	0.5 to 3	7.0/8.0	8113
	40	425	25.5	31500	0.5	-	10	-10	75	NBR	**321G3990**	**-**	**488660.01**	*	-	0.3 to 3	7.0/8.0	8113
	40	425	25.5	31500	0.5	-	10	-10	75	NBR	**321G3990**	**-**	**495910**	*	-	0.3 to 3	7.0/8.0	8113
	40	420	25.2	31500	0.3	16	7	-10	100	NBR	**E321G39** [1]	**2995**	**481865**		8	9	2.0	3442
	40	420	25.2	31500	0.3	16	8.5	-10	100	NBR	**E321G39** [1]	**4270**	**481000**		8	8	2.0	3442
	40	420	25.2	31500	0.3	16	7	-10	100	FKM	**E321G3906**	**2995**	**481865**		8	9	2.0	3442
	40	420	25.2	31500	0.3	16	8.5	-10	120	FKM	**E321G3906**	**4270**	**481000**		8	8	2.0	3442
	40	420	25.2	31500	0.3	16	16	-10	100	FKM	**E321G3906**	**4270**	**486265**		14	14	2.0	3442
2"	40	540	32.4	38100	0.5	-	10	-10	75	NBR	**321G4090**	**2995**	**483580.01**	*	-	0.5 to 3	7.0/8.0	8113
	40	540	32.4	38100	0.5	-	10	-10	75	NBR	**321G4090**	**-**	**488660.01**	*	-	0.3 to 3	7.0/8.0	8113
	40	540	32.4	38100	0.5	-	10	-10	75	NBR	**321G4090**	**-**	**495910**	*	-	0.3 to 3	7.0/8.0	8113
	40	540	32.4	40000	0.3	16	7	-10	100	NBR	**E321G40** [1]	**2995**	**481865**		8	9	2.0	3442
	40	540	32.4	40000	0.3	16	8.5	-10	100	NBR	**E321G40** [1]	**4270**	**481000**		8	8	2.0	3442
	40	540	32.4	40000	0.3	16	7	-10	100	FKM	**E321G4006**	**2995**	**481865**		8	9	2.0	3442
	40	540	32.4	40000	0.3	16	8.5	-10	120	FKM	**E321G4006**	**4270**	**481000**		8	8	2.0	3442
	40	540	32.4	40000	0.3	16	7	-10	120	FKM	**E321G4006**	**4270**	**486265**		14	14	2.0	3442

Nota:

1. Pilota con tenuta in Rubino sintetico

In questa pagina	Raccordi	Orifizio (mm)	Kv (l/min)	Press. Diff. (bar)	Temp. Fluido (°C)	Temp. Amb. (°C)
da	1 1/2''	40	420	3	-10	-10
a	2''	40	540	16	120	50

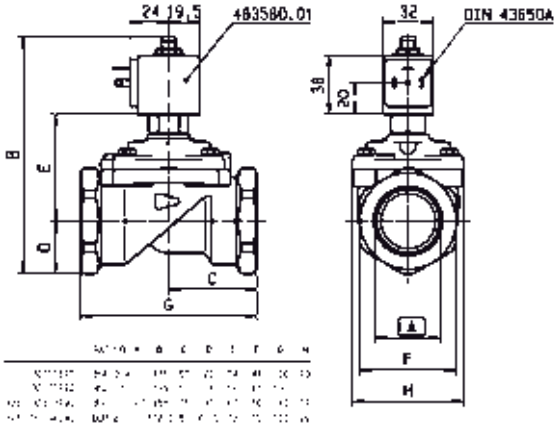

Disegno 8113

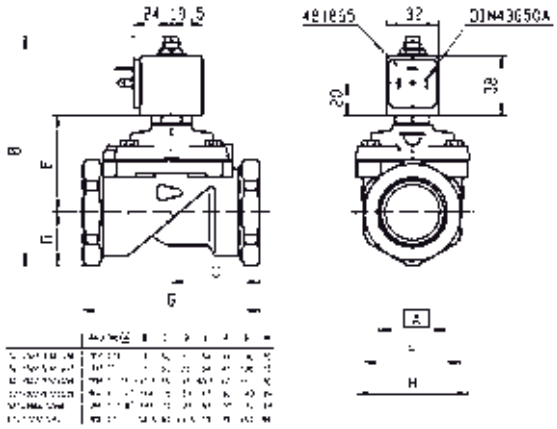

Disegno 3442

2/2 VALVOLE PER ARIA SECCA O LUBRIFICATA, GAS NEUTRI E LIQUIDI

SERVOPILOTATA

OTTONE

MONTAGGIO SU RACCORDI

NORMALMENTE APERTA

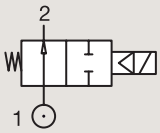

Raccordi	Orifizio Ø	Fattore portata			Pressione differenziale			Temp. Fluido		Tenuta	Valvola PARKER			Potenza		Gruppo Electtrico	Disegno nr.
					Min	Mass		Min	Mass		Codice di Ordinazione	Modello valvola	Modello bobina				
BSP	mm	Kv l/min	KV m³/h	Qn m³/h	bar	AC bar	DC bar	°C	°C					AC W	DC W		
3/8"	13	33	2	-	0.5	-	16	-10	90	NBR	366601 [1]	PM169.1IN	ZB16	-	12	20.1/20.2	052
	13	33	2	-	0.5	16	-	-10	90	NBR	366601 [1]	PM169.1IN	ZH14	9	-	20.1/20.2	052
1/2"	13	42	2.5	-	0.5	-	16	-10	90	NBR	366606 [1]	PM169.1AN	ZB16	-	12	20.1/20.2	049
	13	42	2.5	-	0.5	16	-	-10	90	NBR	366606 [1]	PM169.1AN	ZH14	9	-	20.1/20.2	049
3/4"	20	117	7	-	0.5	-	16	-10	90	NBR	366611 [1]	PM169.1CN	ZB16	-	12	20.1/20.2	050
	20	117	7	-	0.5	16	-	-10	90	NBR	366611 [1]	PM169.1CN	ZH14	9	-	20.1/20.2	050
1"	25	133	8	-	0.5	-	16	-10	90	NBR	366616 [1]	PM169.1DN	ZB16	-	12	20.1/20.2	051
	25	133	8	-	0.5	16	-	-10	90	NBR	366616 [1]	PM169.1DN	ZH14	9	-	20.1/20.2	051

Nota:

1. Valvole compatibili unicamente con aria e gas neutri

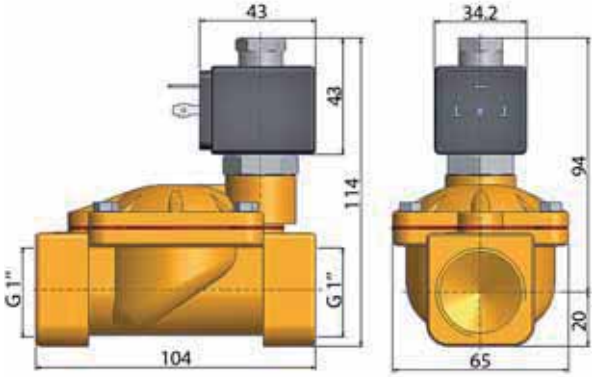

Disegno 051

In questa pagina	Raccordi	Orifizio (mm)	Kv (l/min)	Press. Diff. (bar)	Temp. Fluido (°C)	Temp. Amb. (°C)
da	3/8''	13	33	16	-10	-10
a	1''	25	133	16	90	50

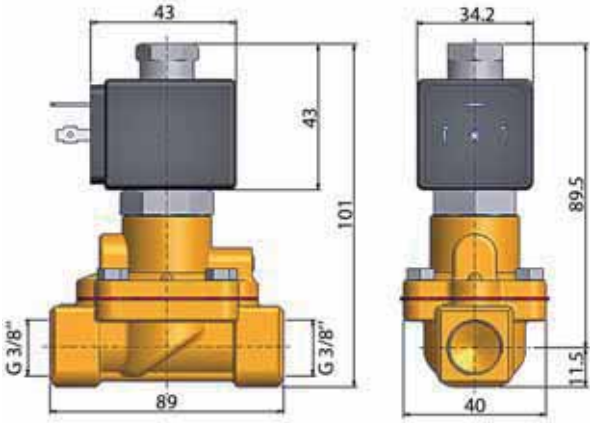

Disegno 052

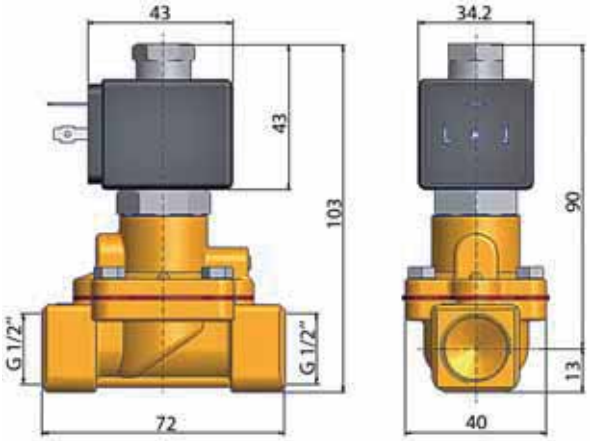

Disegno 049

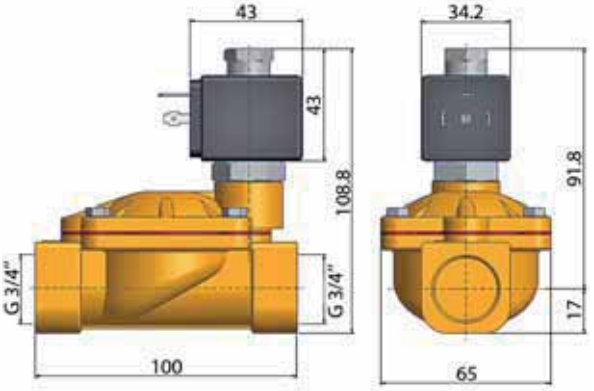

Disegno 050

2/2 VALVOLE PER ARIA SECCA O LUBRIFICATA, GAS NEUTRI E LIQUIDI
SERVOPILOTATA

OTTONE
MONTAGGIO SU RACCORDI
NORMALMENTE APERTA

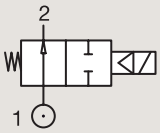

Raccordi	Orifizio Ø	Fattore Portata			Pressione differenziale			Temp. Fluido		Tenuta	Valvola PARKER LUCIFER®			Potenza		Gruppo Elettrico	Disegno nr.
					Min	Mass		Min	Mass		Valvola	Housing	Bobina				
BSP	mm	Kv l/min	KV m³/h	Qn l/min	bar	AC bar	DC bar	°C	°C					AC W	DC W		
1/4"	8	36	2.16	1600	0.3	40	25	-10	100	NBR	322H71 [123]	2995	481865	8	9	2.0	3523
	8	36	2.16	1600	0.3	40	30	-10	100	NBR	322H71 [123]	4270	481000	8	8	2.0	3523
	8	36	2.16	1600	0.3	40	40	-10	100	NBR	322H71 [123]	4270	486265	14	14	2.0	3523
	8	36	2.16	1600	0.3	40	40	-10	100	FKM	322H7106 [123]	2995	481865	8	9	2.0/14.1	3523
	8	36	2.16	1600	0.3	40	40	-10	120	FKM	322H7106 [123]	4270	481000	8	8	2.0/14.1	3523
	8	36	2.16	1600	0.3	40	40	-10	140	FKM	322H7106 [123]	4270	486265	14	14	2.0/14.1	3523
3/8"	11	50	3	3240	0.3	40	40	-10	75	NBR	322H73 [123]	2995	481865	8	9	2.0	3523
	11	50	3	3240	0.3	40	40	-10	75	NBR	322H73 [123]	4270	481000	8	8	2.0	3523
	11	50	3	3240	0.3	40	40	-10	75	NBR	322H73 [123]	4270	486265	14	14	2.0	3523
	11	50	3	3240	0.3	40	40	-10	100	FKM	322H7306 [123]	2995	481865	8	9	2.0/14.1	3523
	11	50	3	3240	0.3	40	40	-10	100	FKM	322H7306 [123]	4270	481000	8	8	2.0/14.1	3523
	11	50	3	3240	0.3	40	40	-10	140	FKM	322H7306 [123]	4270	486265	14	14	2.0/14.1	3523
1/2"	15	60	3.6	3890	0.3	15	15	-10	100	NBR	322G75	2995	481865	8	9	2.1	3522
	15	60	3.6	3890	0.3	15	15	-10	100	NBR	322G75	4270	481000	8	8	2.1	3522
	15	60	3.6	3890	0.3	20	20	-10	100	FKM	322G7506 [3]	2995	481865	8	9	2.0	3522
	15	60	3.6	3890	0.3	20	20	-10	100	FKM	322G7506 [3]	4270	481000	8	8	2.0	3522
	15	60	3.6	3890	0.3	20	20	-10	100	FKM	322G7506 [3]	4270	486265	14	14	2.0	3522
	15	60	3.6	3150	1.5	40	40	-10	50	PUR	322H35	2995	481865	8	9	2.1	7569
	15	60	3.6	3150	1.5	40	40	-10	50	PUR	322H35	4270	481000	8	8	2.1	7569
	15	60	3.6	3890	0.3	40	40	-10	100	NBR	322H75 [123]	2995	481865	8	9	2.0	3522
	15	60	3.6	3890	0.3	40	40	-10	100	NBR	322H75 [123]	4270	481000	8	8	2.0	3522
	15	60	3.6	3890	0.3	40	40	-10	100	NBR	322H75 [123]	4270	486265	14	14	2.0	3522
	15	60	3.6	3890	0.3	40	40	-10	100	FKM	322H7506 [123]	2995	481865	8	9	2.0/14.1	3522
	15	60	3.6	3890	0.3	40	40	-10	120	FKM	322H7506 [123]	4270	481000	8	8	2.0/14.1	3522
	15	60	3.6	3890	0.3	40	40	-10	140	FKM	322H7506 [123]	4270	486265	14	14	2.0/14.1	3522

Nota:

1. Con selezionatore a 4 posizioni per controllo tempo di chiusura
2. Pilota con tenuta in Rubino sintetico
3. Pressione differenziale minima = 0.3 bar apertura e 0 bar chiusura

In questa pagina	Raccordi	Orifizio (mm)	Kv (l/min)	Press. Diff. (bar)	Temp. Fluido (°C)	Temp. Amb. (°C)
da	1/4"	8	36	15	-10	-10
a	1/2"	15	60	40	140	50

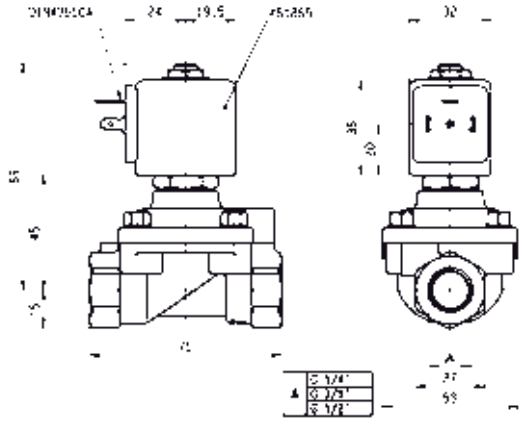

Disegno 3523

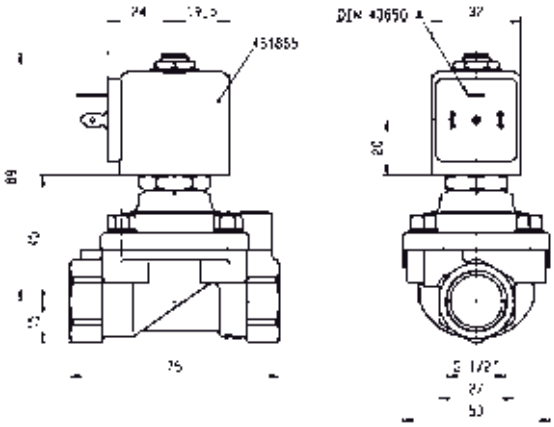

Disegno 3522

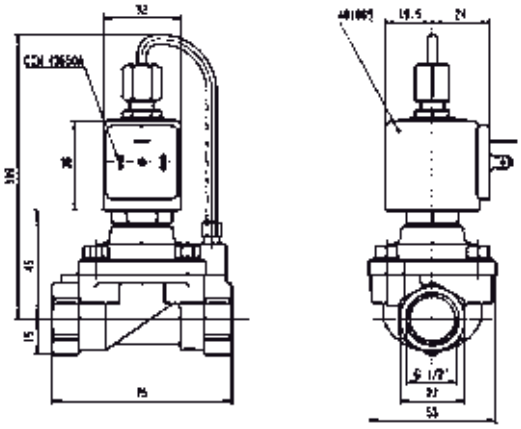

Disegno 7569

2/2 VALVOLE PER ARIA SECCA O LUBRIFICATA, GAS NEUTRI E LIQUIDI

SERVOPILOTATA

OTTONE

MONTAGGIO SU RACCORDI

NORMALMENTE APERTA

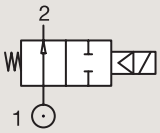

Raccordi	Orifizio Ø	Fattore Portata			Pressione differenziale			Temp. Fluido		Tenuta	Valvola PARKER LUCIFER®			Potenza		Gruppo Elettrico	Disegno nr.
					Min	Mass		Min	Mass		Valvola	Housing	Bobina				
BSP	mm	Kv l/min	KV m³/h	Qn l/min	bar	AC bar	DC bar	°C	°C					AC W	DC W		
3/4"	15	-	-	3550	1.5	40	40	-10	50	PUR	322H36 [1]	2995	481865	8	9	2.1	7570
	15	-	-	3550	1.5	40	40	-10	50	PUR	322H36 [1]	4270	481000	8	8	2.1	7570
	20	135	8.1	9500	0.3	16	16	-10	100	NBR	322G36	2995	481865	8	9	2.1	3442
	20	135	8.1	9500	0.3	16	16	-10	100	NBR	322G36	4270	481000	8	8	2.1	3442
	20	135	8.1	9500	0.3	16	16	-10	100	FKM	322G3606	2995	481865	8	9	2.1	3442
	20	135	8.1	9500	0.3	16	16	-10	120	FKM	322G3606	4270	481000	8	8	2.1	3442
1"	25	180	10.8	14000	0.3	16	16	-10	100	NBR	322G37	2995	481865	8	9	2.1	3442
	25	180	10.8	14000	0.3	16	16	-10	100	NBR	322G37	4270	481000	8	8	2.1	3442
	25	180	10.8	14000	0.3	16	16	-10	100	FKM	322G3706	2995	481865	8	9	2.1	3442
	25	180	10.8	14000	0.3	16	16	-10	120	FKM	322G3706	4270	481000	8	8	2.1	3442
	28	270	16.2	18000	0.3	16	16	-10	100	NBR	322G38	2995	481865	8	9	2.1	3442
	28	270	16.2	18000	0.3	16	16	-10	100	NBR	322G38	4270	481000	8	8	2.1	3442
	40	420	25.2	31500	0.3	12	12	-10	100	FKM	322G3906	2995	481865	8	9	2.1	3442
	40	420	25.2	31500	0.3	12	12	-10	100	FKM	322G3906	4270	481000	8	8	2.1	3442
1 1/4"	28	270	16.2	18000	0.3	16	16	-10	100	FKM	322G3806	2995	481865	8	9	2.1	3442
	28	270	16.2	18000	0.3	16	16	-10	120	FKM	322G3806	4270	481000	8	8	2.1	3442
1 1/2"	40	420	25.2	31500	0.3	12	12	-10	100	NBR	322G39	2995	481865	8	9	2.1	3442
	40	420	25.2	31500	0.3	12	12	-10	100	NBR	322G39	4270	481000	8	8	2.1	3442
2"	40	540	32.4	40000	0.3	12	12	-10	100	NBR	322G40	2995	481865	8	9	2.1	3442
	40	540	32.4	40000	0.3	12	12	-10	100	NBR	322G40	4270	481000	8	8	2.1	3442
	40	540	32.4	40000	0.3	12	12	-10	100	FKM	322G4006	2995	481865	8	9	2.1	3442
	40	540	32.4	40000	0.3	12	12	-10	120	FKM	322G4006	4270	481000	8	8	2.1	3442

Nota:

1. Pressione differenziale minma = 1.5 bar apertura e 0.3 bar chiusura

In questa pagina	Raccordi	Orifizio (mm)	Kv (l/min)	Press. Diff. (bar)	Temp. Fluido (°C)	Temp. Amb. (°C)
da	3/4''	15	-	12	-10	-10
a	2''	40	540	40	120	50

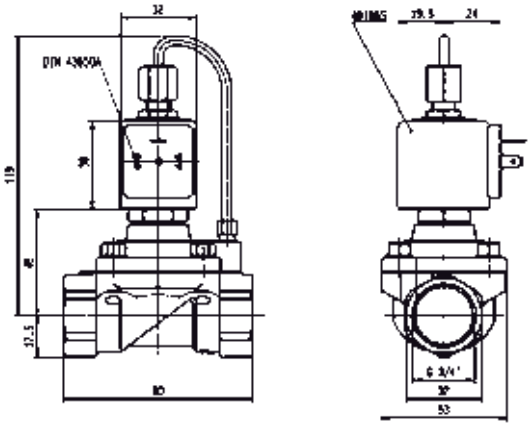

Disegno 7570

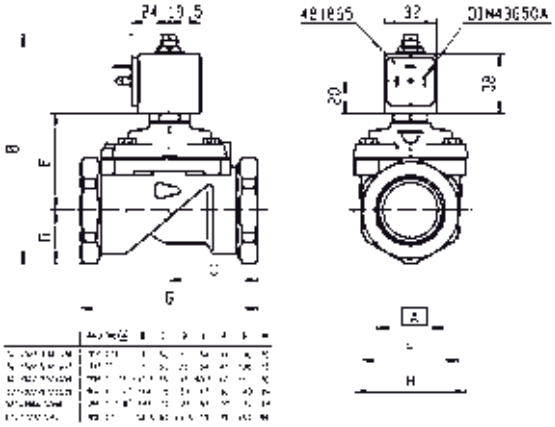

Disegno 3442

2/2 VALVOLE PER ARIA SECCA O LUBRIFICATA, GAS NEUTRI E LIQUIDI

SERVOPILOTATA

OTTONE
MONTAGGIO SU RACCORDI
CONTROLLO CON IMPULSI ELETTRICI

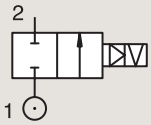

Raccordi	Orifizio Ø	Fattore Portata			Pressione differenziale			Temp. Fluido		Tenuta	Valvola PARKER LUCIFER®			Potenza		Gruppo Elettrico	Disegno nr.
					Min	Mass		Min	Mass		Valvola	Housing	Bobina				
BSP	mm	Kv l/min	KV m³/h	Qn l/min	bar	AC bar	DC bar	°C	°C					AC W	DC W		
1/4"	12	32	1.92	2150	0.3	12	-	-10	100	FKM	**325K4106**	**4269**	**484990**	11	-	4.0	7094
	12	32	1.92	2150	0.3	-	12	-10	100	FKM	**325K4106**	**4269**	**485400**	-	13	4.0	7094
3/8"	12	45	2.7	3050	0.3	12	-	-10	100	FKM	**325K4306**	**4269**	**484990**	11	-	4.0	7094
	12	45	2.7	3050	0.3	-	12	-10	100	FKM	**325K4306**	**4269**	**485400**	-	13	4.0	7094
1/2"	12	50	3	3400	0.3	12	-	-10	100	FKM	**325K4506**	**4269**	**484990**	11	-	4.0	7094
	12	50	3	3400	0.3	-	12	-10	100	FKM	**325K4506**	**4269**	**485400**	-	13	4.0	7094
3/4"	18	100	6	9400	0.3	12	-	-10	100	FKM	**325K4606**	**4269**	**484990**	11	-	4.0	7099
	18	100	6	9400	0.3	-	12	-10	100	FKM	**325K4606**	**4269**	**485400**	-	13	4.0	7099
1"	18	110	6.6	10150	0.3	12	-	-10	100	FKM	**325K4706**	**4269**	**484990**	11	-	4.0	7100
	18	110	6.6	10150	0.3	-	12	-10	100	FKM	**325K4706**	**4269**	**485400**	-	13	4.0	7100

In questa pagina	Raccordi	Orifizio (mm)	Kv (l/min)	Press. Diff. (bar)	Temp. Fluido (°C)	Temp. Amb. (°C)
da	1/4"	12	32	12	-10	-10
a	1"	18	110	12	100	50

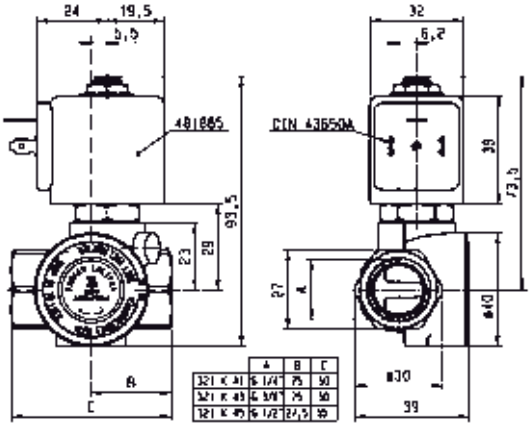

Disegno 7094

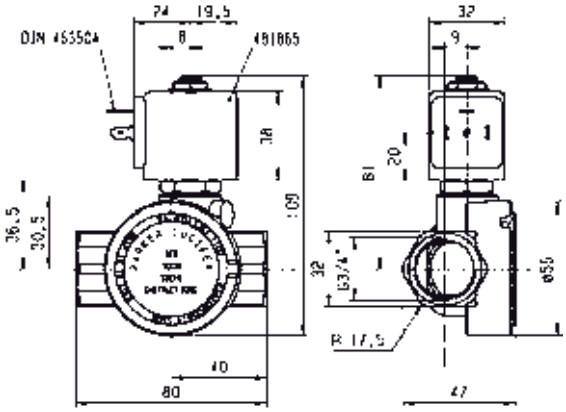

Disegno 7099

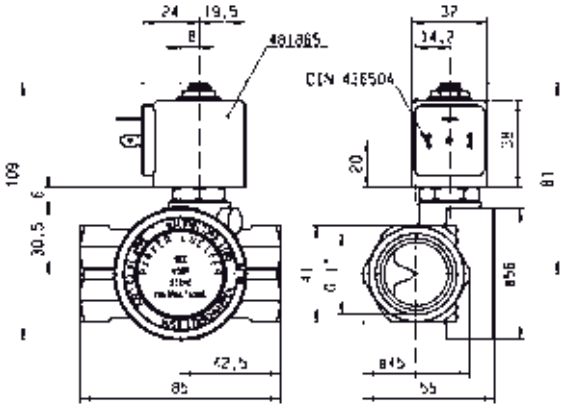

Disegno 7100

2/2 VALVOLE PER ARIA SECCA O LUBRIFICATA, GAS NEUTRI E LIQUIDI
SERVOPILOTATA

OTTONE
MONTAGGIO SOTTOBASE
NORMALMENTE CHIUSA

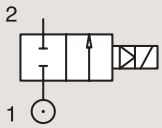

Raccordi	Orifizio Ø	Fattore Portata			Pressione differenziale			Temp. Fluido		Tenuta	Valvola PARKER LUCIFER®			Potenza		Gruppo Elettrico	Disegno nr.
					Min	Mass		Min	Mass		Valvola	Housing	Bobina				
	mm	Kv l/min	KV m³/h	Qn l/min	bar	AC bar	DC bar	°C	°C					AC W	DC W		
SB	14	-	-	2100	1.5	40	40	-10	50	PUR	**321F35**	**2995**	**481865**	8	9	2.0	3520
	14	-	-	2100	1.5	40	40	-10	50	PUR	**321F35**	**2995**	**492425**	14	14	2.0	3520
	14	-	-	2100	0	13	13	-10	50	PUR	**421F35**	**2995**	**481865**	8	9	2.1	3520
	14	45	2.7	2100	0.3	40	25	-10	100	NBR	**E321F32** [2]	**2995**	**481865**	8	9	2.0	3520
	14	45	2.7	2100	0.3	40	30	-10	100	NBR	**E321F32** [2]	**4270**	**481000**	8	8	2.0	3520
	14	45	2.7	2100	0.3	40	40	-10	100	NBR	**E321F32** [2]	**4270**	**486265**	14	14	2.0	3520
	14	45	2.7	-	0.3	40	25	-10	100	FKM	**E321F3202** [1234]	**2995**	**481865**	8	9	2.0	3520
	14	45	2.7	-	0.3	40	30	-10	120	FKM	**E321F3202** [1234]	**4270**	**481000**	8	8	2.0	3520
	14	45	2.7	-	0.3	40	40	-10	140	FKM	**E321F3202** [1234]	**4270**	**486265**	14	14	2.0	3520

Nota:

1. Con selezionatore a 4 posizioni per controllo tempo di chiusura
2. Pilota con tenuta in Rubino sintetico
3. Pressione differenziale minima = 0.3 bar apertura e 0 bar chiusura
4. Valvole compatibili unicamente con olio idraulico e liquidi neutri

OTTONE
MONTAGGIO SOTTOBASE
NORMALMENTE APERTA

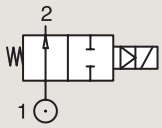

Raccordi	Orifizio Ø	Fattore Portata			Pressione differenziale			Temp. Fluido		Tenuta	Valvola PARKER LUCIFER®			Potenza		Gruppo Elettrico	Disegno nr.
					Min	Mass		Min	Mass		Valvola	Housing	Bobina				
	mm	Kv l/min	KV m³/h	Qn l/min	bar	AC bar	DC bar	°C	°C					AC W	DC W		
SB	14	-	-	2100	1.5	40	40	-10	50	PUR	**322F35**	**2995**	**481865**	8	9	2.1	7527
	14	46	2.76	-	0.3	40	40	-10	75	NBR	**322F72** [123]	**2995**	**481865**	8	9	2.1	3520
	14	46	2.76	-	0.3	40	40	-10	75	NBR	**322F72** [123]	**4270**	**481000**	8	8	2.1	3520
	14	45	2.7	-	0.3	40	40	0	100	FKM	**322F7206** [1234]	**2995**	**481865**	8	9	2.1/14.1	3520
	14	45	2.7	-	0.3	40	40	0	120	FKM	**322F7206** [1234]	**4270**	**481000**	8	8	2.1/14.1	3520

Nota:

1. Con selezionatore a 4 posizioni per controllo tempo di chiusura
2. Pilota con tenuta in Rubino sintetico
3. Pressione differenziale minima = 0.3 bar apertura e 0 bar chiusura
4. Valvole compatibili unicamente con olio idraulico e liquidi neutri

In questa pagina	Raccordi	Orifizio (mm)	Kv (l/min)	Press. Diff. (bar)	Temp. Fluido (°C)	Temp. Amb. (°C)
da	14 mm	14	-	13	-10	-10
a	14 mm	14	46	40	140	50

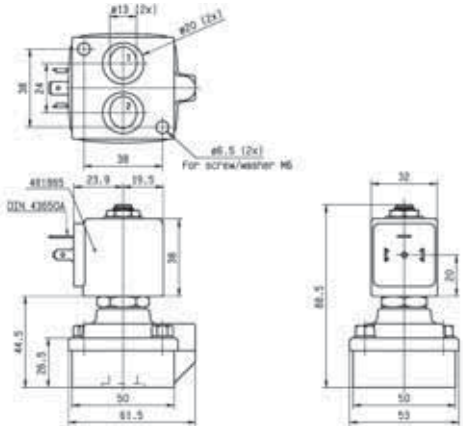

Disegno 3520

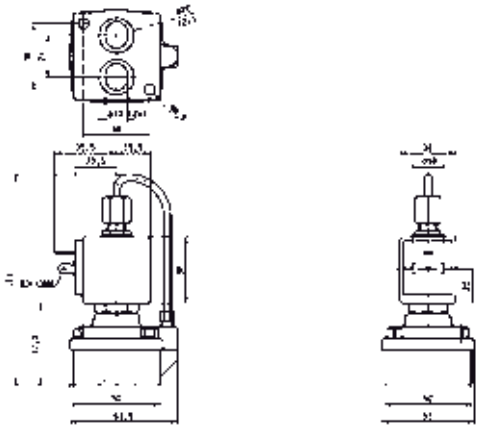

Disegno 7527

VALVOLE PER ACQUA E LIQUIDI NEUTRI

2/2

Azionamento	Corpo	Funzione	Raccordi	Orifizio (mm)	Fattore Portata	Pressione Differenziale Mass. (Bar)	Temp. Mass. Fluido	Pagina Elettrovalvola Parker	Pagina Elettrovalvola Parker LUCIFER®
Comando diretto	Ottone/Raccordi	Normalmente chiusa	1/8''	1.5 a 3	4.5	20	140	80	84
			1/4''	1.5 a 6	13	20	140	82	84
			3/8''	4 a 6	12	10	120	-	86
			1/2''	8.5 a 11	36	4	120	-	86
		Normalmente aperta	1/4''	2.5	3	12	120	-	86
		Controllo con impulsi elettrici	1/4''	5	11	5	100	-	88
	Ottone/Sottobase	Normalmente chiusa	SB	2 a 2.5	3	15	140	90	-
			5 mm	1.5 a 3	4.5	20	120	-	92
Servopilotata	Ottone/Raccordi	Normalmente chiusa	1/4''	11 a 12	32	12	120	-	98
			3/8''	11 a 13	50	20	140	94	98
			1/2''	11 a 13	50	20	140	94	100
			3/4''	18 a 20	140	20	140	94	102
			1''	18 a 28	270	20	140	94	104
			1 1/4''	35	420	10	140	96	-
			1 1/2''	40	500	16	140	96	104
			2''	40 a 50	620	16	140	96	104
		Normalmente aperta	1/4''	12	32	12	120	-	108
			3/8''	12 a 13	50	20	140	106	108
			1/2''	12 a 15	60	20	140	106	108
			3/4''	18 a 20	140	20	140	106	108
			1''	18 a 25	180	20	140	106	110
			1 1/4''	35	420	10	140	106	-
			1 1/2''	40	500	12	140	106	110
			2''	50	620	10	140	106	-
			2 1/2''	65	1100	10	90	106	-
			3''	75	1334	10	90	106	-
	Ottone/Sottobase	Normalmente chiusa	14 mm	14	45	40	100	-	110

2/2 VALVOLE PER ACQUA E LIQUIDI NEUTRI

COMANDO DIRETTO

Impianti Commerciali

Erogazione di Bevande

Impianti Industriali

OTTONE
MONTAGGIO SU RACCORDI
NORMALMENTE CHIUSA

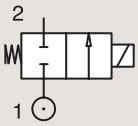

Raccordi	Orifizio Ø	Fattore portata			Pressione differenziale			Temp. Fluido		Tenuta	Valvola PARKER			Potenza		Gruppo Electtrico	Disegno nr.
					Min	Mass		Min	Mass		Codice di Ordinazione	Modello valvola	Modello bobina				
BSP	mm	Kv l/min	KV m³/h	Qn m³/h	bar	AC bar	DC bar	°C	°C					AC W	DC W		
1/8"	1.5	1.5	0.09	-	0	20	-	-10	140	FKM	**363378**	**PM146BV**	**ZB09**	9	-	20.1/20.2	034
	1.5	1.5	0.09	-	0	-	18	-10	140	FKM	**363378**	**PM146BV**	**ZB12**	-	12	20.1/20.2	034
	2.2	2	0.12	-	0	10	-	-10	140	FKM	**392349** [12]	**161.4AV**	**KT09** 115/50	9	-	22.0	043
	2.2	2	0.12	-	0	10	-	-10	140	FKM	**392355** [12]	**161.4AV**	**KT09** 230/50	9	-	22.0	043
	2.2	2	0.12	-	0	10	-	-10	140	FKM	**392335** [12]	**161.4AV**	**KT09** 24/50	9	-	22.0	043
	2.2	2	0.12	-	0	10	-	-10	140	FKM	**392366** [12]	**161.4AV**	**KT09** 240/50	9	-	22.0	043
	2.2	2	0.12	-	0	-	6	-10	140	FKM	**392372** [12]	**161.4AV**	**KT10** 12 DC	-	10	22.0	043
	2.2	2	0.12	-	0	-	6	-10	140	FKM	**392370** [12]	**161.4AV**	**KT10** 24 DC	-	10	22.0	043
	2.5	3.3	0.20	-	0	10	-	-10	140	FKM	**363380**	**PM146FV**	**ZB09**	9	-	20.1/20.2	034
	2.5	3.3	0.20	-	0	-	5	-10	140	FKM	**363380**	**PM146FV**	**ZB12**	-	12	20.1/20.2	034
	2.8	2.9	0.18	-	0	6	-	-10	140	FKM	**392389** [12]	**161.4BV**	**KT09** 115/60	9	-	22.0	043
	2.8	2.9	0.18	-	0	6	-	-10	140	FKM	**392388** [12]	**161.4BV**	**KT09** 230/50	9	-	22.0	043
	3	4.5	0.27	-	0	7	-	-10	140	FKM	**363390**	**PM146HV**	**ZB09**	9	-	20.1/20.2	034
	3	4.5	0.27	-	0	-	2	-10	140	FKM	**363390**	**PM146HV**	**ZB12**	-	12	20.1/20.2	034

Nota:

1. Codice di ordinazione legato a una valvola completa di bobina, con il voltaggio indicato.
2. Pressione massima vapore: 4 bar (140°C)

In questa pagina	Raccordi	Orifizio (mm)	Kv (l/min)	Press. Diff. (bar)	Temp. Fluido (°C)	Temp. Amb. (°C)
da	1/8''	1.5	1.5	2	-10	-10
a	1/8''	3	4.5	20	140	50

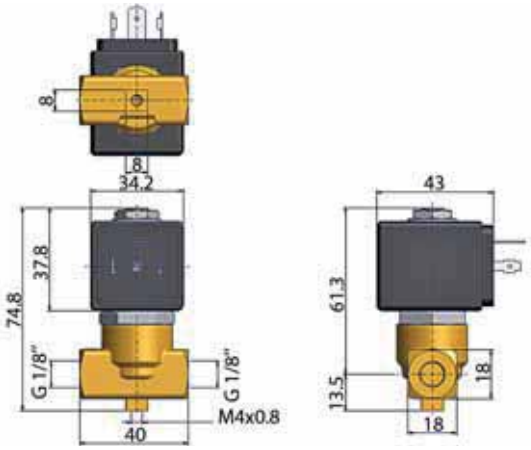

Disegno 034

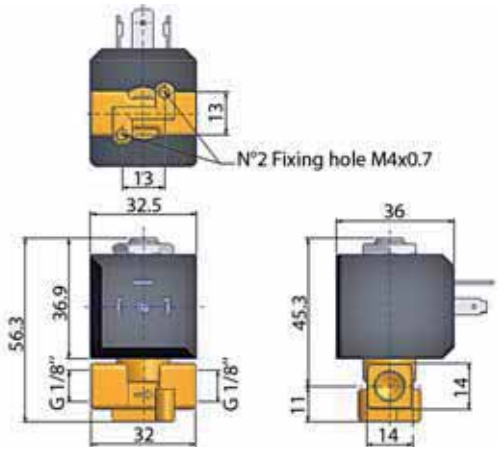

Disegno 043

2/2 VALVOLE PER ACQUA E LIQUIDI NEUTRI

COMANDO DIRETTO

OTTONE
MONTAGGIO SU RACCORDI
NORMALMENTE CHIUSA

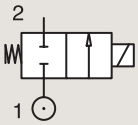

Raccordi	Orifizio Ø	Fattore portata			Pressione differenziale			Temp. Fluido		Tenuta	Valvola PARKER			Potenza		Gruppo Electtrico	Disegno nr.
					Min	Mass		Min	Mass		Codice di Ordinazione	Modello valvola	Modello bobina				
BSP	mm	Kv l/min	KV m³/h	Qn m³/h	bar	AC bar	DC bar	°C	°C					AC W	DC W		
1/4"	2.2	2	0.12	-	0	10	-	-10	140	FKM	**392408** 12	**161.4EV**	**KT09** 115/50	9	-	22.0	044
	2.2	2	0.12	-	0	10	-	-10	140	FKM	**392408** 12	**161.4EV**	**KT09** 115/60	9	-	22.0	044
	2.2	2	0.12	-	0	10	-	-10	140	FKM	**392409** 12	**161.4EV**	**KT09** 208-230/60	9	-	22.0	044
	2.2	2	0.12	-	0	10	-	-10	140	FKM	**392395** 12	**161.4EV**	**KT09** 230/50	9	-	22.0	044
	2.2	2	0.12	-	0	10	-	-10	140	FKM	**392173** 12	**161.4EV**	**KT09** 24/50	9	-	22.0	044
	2.2	2	0.12	-	0	10	-	-10	140	FKM	**392396** 12	**161.4EV**	**KT09** 240/50	9	-	22.0	044
	2.2	2	0.12	-	0	-	6	-10	140	FKM	**392170** 12	**161.4EV**	**KT10** 12V DC	-	10	22.0	044
	2.2	2	0.12	-	0	-	6	-10	140	FKM	**392169** 12	**161.4EV**	**KT10** 24 DC	-	10	22.0	044
	3	4.5	0.27	-	0	7	-	-10	140	FKM	**363444**	**PM146YV**	**ZB09**	9	-	20.1/20.2	035
	3	4.5	0.27	-	0	-	4	-10	140	FKM	**363444**	**PM146YV**	**ZB12**	-	12	20.1/20.2	035
	4.5	9	0.53	-	0	6	-	-10	140	FKM	**363457**	**PM146.3KV**	**ZB14**	14	-	20.2	035
	4.5	9	0.53	-	0	-	2.5	-10	140	FKM	**363457**	**PM146.3KV**	**ZB16**	-	16	20.2	035
	6	13	0.75	-	0	6	-	-10	140	FKM	**363467**	**PM146.3ABV**	**ZB14**	14	-	20.2	035
	6	13	0.75	-	0	-	1	-10	140	FKM	**363467**	**PM146.3ABV**	**ZB16**	-	16	20.2	035

Nota:

1. Codice di ordinazione legato a una valvola completa di bobina, con il voltaggio indicato. ressione massima vapore: 4 bar (140°C)
2. Pressione massima vapore 4 bar (140°C)

In questa pagina	Raccordi	Orifizio (mm)	Kv (l/min)	Press. Diff. (bar)	Temp. Fluido (°C)	Temp. Amb. (°C)
da	1/4''	2.2	2	1	-10	-10
a	1/4''	6	13	10	140	50

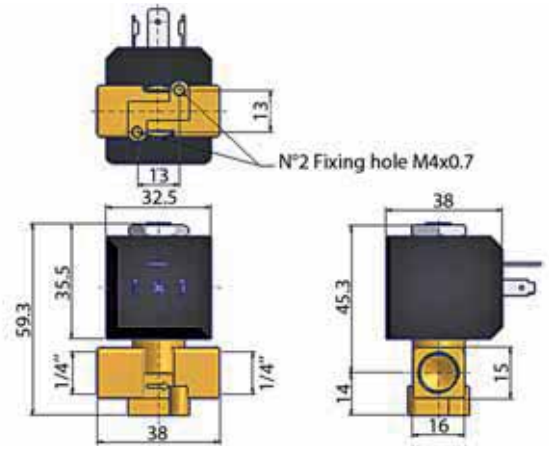

Disegno 044

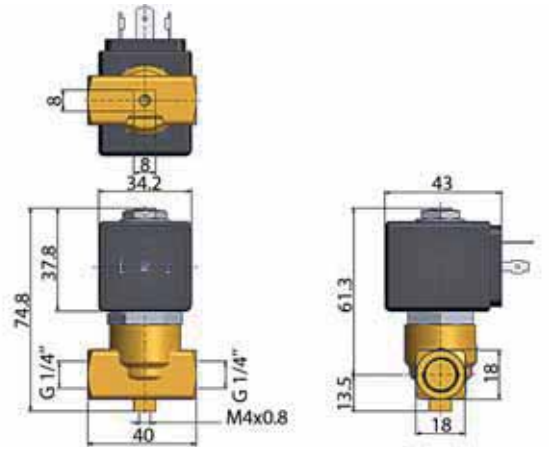

Disegno 035

2/2 VALVOLE PER ACQUA E LIQUIDI NEUTRI

COMANDO DIRETTO

OTTONE
MONTAGGIO SU RACCORDI
NORMALMENTE CHIUSA

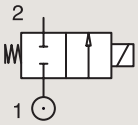

Raccordi	Orifizio Ø	Fattore Portata			Pressione differenziale			Temp. Fluido		Tenuta	Valvola PARKER LUCIFER®			Potenza		Gruppo Elettrico	Disegno nr.
					Min	Mass		Min	Mass		Valvola	Housing	Bobina				
BSP	mm	Kv l/min	KV m³/h	Qn l/min	bar	AC bar	DC bar	°C	°C					AC W	DC W		
1/8"	1.5	0.9	0.05	70	0	20	12	-10	75	FKM	**121M14**	**8993**	**481180**	4	5	1.1	3382
	1.5	0.9	0.05	70	0	20	4	-10	75	FKM	**121M14**	**8993**	**488980**	2	2.5	1.1	3382
	2	2	0.12	125	0	10	7	-10	75	FKM	**121M13**	**8993**	**481180**	4	5	1.1	3382
	2	2	0.12	125	0	10	2.5	-10	75	FKM	**121M13**	**8993**	**488980**	2	2.5	1.1	3382
1/4"	1.5	1.5	0.09	80	0	20	20	-10	100	FKM	**E121K0402**	**2995**	**481865**	8	9	2.0/3.0	3510
	1.5	1.5	0.09	80	0	20	20	-10	120	FKM	**E121K0402**	**4270**	**481000**	8	8	2.0/3.0	3510
	2.5	3.5	0.21	220	0	14	7	-10	100	FKM	**121K0706**	**2995**	**481865**	8	9	2.0	3510
	2.5	3.5	0.21	220	0	14	9	-10	120	FKM	**121K0706**	**4270**	**481000**	8	8	2.0	3510
	2.5	3.5	0.21	220	0	14	14	-10	120	FKM	**121K0706**	**4270**	**486265**	14	14	2.0	3510
	3	4.5	0.27	320	0	10	7	-10	100	FKM	**E121K0302**	**2995**	**481865**	8	9	2.0	3510
	3	4.5	0.27	320	0	10	8.5	-10	120	FKM	**E121K0302**	**4270**	**481000**	8	8	2.0	3510
	3	4.5	0.27	320	0	10	7	-10	100	FKM	**E121K0302**	**4270**	**486265**	14	14	2.0	3510
	3	4.5	0.27	320	0	10	7	-10	100	FKM	**E121K0352** [1]	**2995**	**481865**	8	9	2.0	3510
	3	4.5	0.27	320	0	10	8.5	-10	120	FKM	**E121K0352** [1]	**4270**	**481000**	8	8	2.0	3510
	3	4.5	0.27	320	0	10	10	-10	120	FKM	**E121K0352** [1]	**4270**	**486265**	14	14	2.0	3510
	4	7.5	0.45	480	0	10	4	-10	100	FKM	**121K02**	**2995**	**481865**	8	9	2.0	3510
	4	7.5	0.45	480	0	10	5	-10	120	FKM	**121K02**	**4270**	**481000**	8	8	2.0	3510
	4	7.5	0.45	480	0	10	10	-10	120	FKM	**121K02**	**4270**	**486265**	14	14	2.0	3510
	4	7.5	0.45	480	0	10	4	-10	100	FKM	**121K0250** [1]	**2995**	**481865**	8	9	2.0	3510
	4	7.5	0.45	480	0	10	5	-10	120	FKM	**121K0250** [1]	**4270**	**481000**	8	8	2.0	3510
	4	7.5	0.45	480	0	10	10	-10	120	FKM	**121K0250** [1]	**4270**	**486265**	14	14	2.0	3510
	5	11	0.66	750	0	7	2	-10	100	FKM	**121K01**	**2995**	**481865**	8	9	2.0/14.2	3510
	5	11	0.66	750	0	7	2.8	-10	120	FKM	**121K01**	**4270**	**481000**	8	8	2.0/14.2	3510
	5	11	0.66	750	0	7	5	-10	120	FKM	**121K01**	**4270**	**486265**	14	14	2.0/14.2	3510
	5	11	0.66	750	0	7	2	-10	100	FKM	**121K0106**	**2995**	**481865**	8	9	2.0	3510
	5	11	0.66	750	0	7	2.8	-10	120	FKM	**121K0106**	**4270**	**481000**	8	8	2.0	3510
	5	11	0.66	750	0	7	5	-10	120	FKM	**121K0106**	**4270**	**486265**	14	14	2.0	3510
	5	11	0.66	750	0	7	2	-10	100	FKM	**121K0150** [1]	**2995**	**481865**	8	9	2.0	3510
	5	11	0.66	750	0	7	2.8	-10	120	FKM	**121K0150** [1]	**4270**	**481000**	8	8	2.0	3510
	5	11	0.66	750	0	7	5	-10	120	FKM	**121K0150** [1]	**4270**	**486265**	14	14	2.0	3510

Nota:

1. Con comando manuale

In questa pagina	Raccordi	Orifizio (mm)	Kv (l/min)	Press. Diff. (bar)	Temp. Fluido (°C)	Temp. Amb. (°C)
da	1/8''	1.5	0.9	2	-10	-10
a	1/4''	5	11	20	120	50

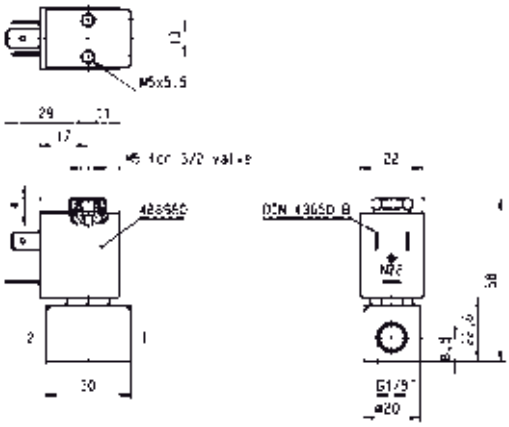

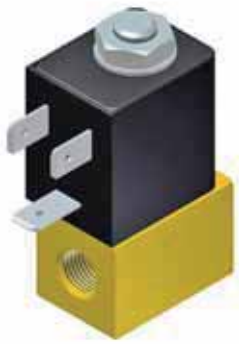

Disegno 3382

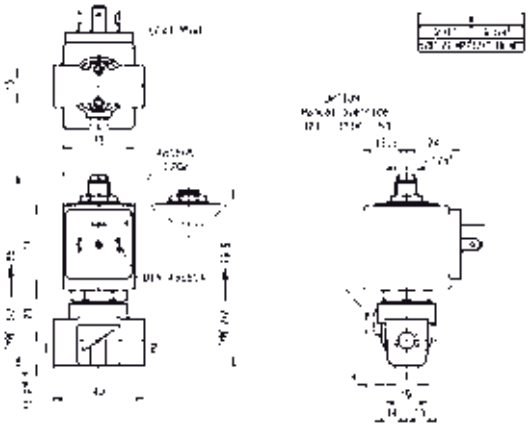

Disegno 3510

2/2 VALVOLE PER ACQUA E LIQUIDI NEUTRI

COMANDO DIRETTO

OTTONE
MONTAGGIO SU RACCORDI
NORMALMENTE CHIUSA

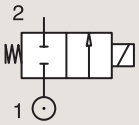

Raccordi	Orifizio Ø	Fattore Portata			Pressione differenziale			Temp. Fluido		Tenuta	Valvola PARKER LUCIFER®			Potenza		Gruppo Elettrico	Disegno nr.
					Min	Mass		Min	Mass		Valvola	Housing	Bobina				
BSP	mm	Kv l/min	KV m³/h	Qn l/min	bar	AC bar	DC bar	°C	°C					AC W	DC W		
3/8''	4	7.5	0.45	480	0	10	4	-10	100	FKM	121K3206	2995	481865	8	9	2.0	3551
	4	7.5	0.45	480	0	10	5	-10	120	FKM	121K3206	4270	481000	8	8	2.0	3551
	4	7.5	0.45	480	0	10	10	-10	120	FKM	121K3206	4270	486265	14	14	2.0	3551
	5	11	0.66	750	0	7	2	-10	100	FKM	121K3106	2995	481865	8	9	2.0	3551
	5	11	0.66	750	0	7	2.8	-10	120	FKM	121K3106	4270	481000	8	8	2.0	3551
	5	11	0.66	750	0	7	5	-10	120	FKM	121K3106	4270	486265	14	14	2.0	3551
	6	12	0.72	1100	0	5	1.1	-10	100	FKM	121K3306	2995	481865	8	9	2.0/14.2	3551
	6	12	0.72	1100	0	5	1.5	-10	120	FKM	121K3306	4270	481000	8	8	2.0/14.2	3551
	6	12	0.72	1100	0	5	3	-10	120	FKM	121K3306	4270	486265	14	14	2.0/14.2	3551
1/2''	8.5	25	1.5	1600	0	1.1	0.5	-10	100	FKM	E121K46	2995	481865	8	9	2.0	3427
	8.5	25	1.5	1600	0	2.2	0.5	-10	120	FKM	E121K46	4270	481000	8	8	2.0	3427
	8.5	25	1.5	1600	0	4	1.2	-10	120	FKM	E121K46	4270	486265	14	14	2.0	3427
	11	36	2.16	2500	0	0.7	0.3	-10	100	FKM	E121K45	2995	481865	8	9	2.0	3427
	11	36	2.16	2500	0	1.2	0.35	-10	120	FKM	E121K45	4270	481000	8	8	2.0	3427
	11	36	2.16	2500	0	2.5	0.7	-10	120	FKM	E121K45	4270	486265	14	14	2.0	3427

OTTONE
MONTAGGIO SU RACCORDI
NORMALMENTE APERTA

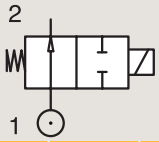

Raccordi	Orifizio Ø	Fattore Portata			Pressione differenziale			Temp. Fluido		Tenuta	Valvola PARKER LUCIFER®			Potenza		Gruppo Elettrico	Disegno nr.
					Min	Mass		Min	Mass		Valvola	Housing	Bobina				
BSP	mm	Kv l/min	KV m³/h	Qn l/min	bar	AC bar	DC bar	°C	°C					AC W	DC W		
1/4''	2.5	3	0.18	180	0	12	12	-10	100	FKM	122K8306	2995	481865	8	9	2.0	3510
	2.5	3	0.18	180	0	12	12	-10	120	FKM	122K8306	4270	481000	8	8	2.0	3510
	2.5	3	0.18	180	0	12	12	-10	120	FKM	122K8306	4270	486265	14	14	2.0	3510

In questa pagina	Raccordi	Orifizio (mm)	Kv (l/min)	Press. Diff. (bar)	Temp. Fluido (°C)	Temp. Amb. (°C)
da	1/4"	2.5	3	0.3	-10	-10
a	1/2"	11	36	12	120	50

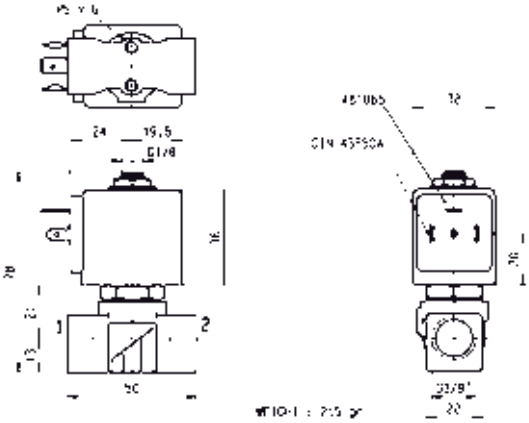

Disegno 3551

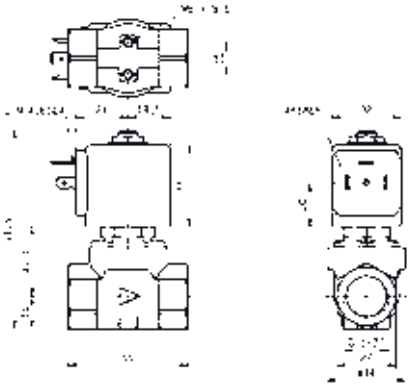

Disegno 3427

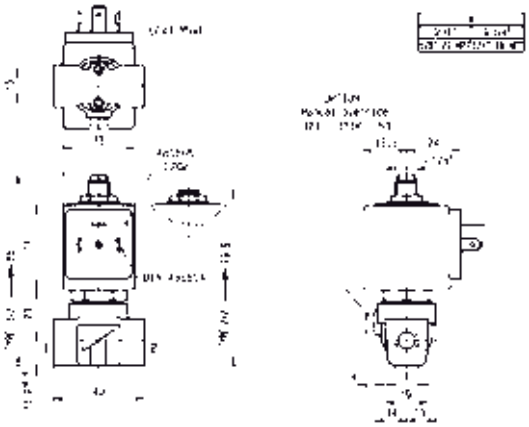

Disegno 3510

2/2 VALVOLE PER ACQUA E LIQUIDI NEUTRI

COMANDO DIRETTO

OTTONE
MONTAGGIO SU RACCORDI
CONTROLLO CON IMPULSI ELETTRICI

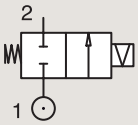

Raccordi	Orifizio Ø	Fattore Portata			Pressione differenziale			Temp. Fluido		Tenuta	Valvola PARKER LUCIFER®			Potenza		Gruppo Elettrico	Disegno nr.
					Min	Mass		Min	Mass		Valvola	Housing	Bobina				
BSP	mm	Kv l/min	KV m³/h	Qn l/min	bar	AC bar	DC bar	°C	°C					AC W	DC W		
1/4''	5	11	0.66	750	0	5	-	-10	100	FKM	**125K01**	**4269**	**484990**	11	-	4.0	8296
	5	11	0.66	750	0	-	1.5	-10	100	FKM	**125K01**	**4269**	**485400**	-	13	4.0	8296

In questa pagina	Raccordi	Orifizio (mm)	Kv (l/min)	Press. Diff. (bar)	Temp. Fluido (°C)	Temp. Amb. (°C)
da	1/4''	5	11	1.5	-10	-10
a	1/4''	5	11	5	100	50

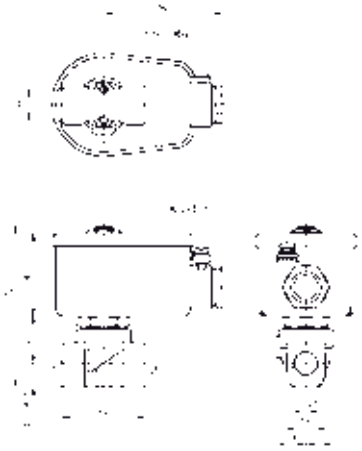

Disegno 8296

2/2 VALVOLE PER ACQUA E LIQUIDI NEUTRI

COMANDO DIRETTO

OTTONE
MONTAGGIO SOTTOBASE
NORMALMENTE CHIUSA

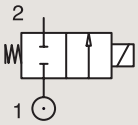

Raccordi	Orifizio Ø	Fattore portata			Pressione differenziale			Temp. Fluido		Tenuta	Valvola PARKER			Potenza		Gruppo Electtrico	Disegno nr.
					Min	Mass		Min	Mass		Codice di Ordinazione	Modello valvola	Modello bobina				
	mm	Kv l/min	KV m³/h	Qn m³/h	bar	AC bar	DC bar	°C	°C					AC W	DC W		
SB	2	2	0.12	-	0	15	-	-10	140	FKM	**360469**	**PM125BV**	**ZB09**	9	-	20.1/20.2	007
	2.5	3	0.18	-	0	10	-	-10	140	FKM	**397146J**	**PM125CV.2**	**ZB09**	9	-	20.1/20.2	007

In questa pagina	Raccordi	Orifizio (mm)	Kv (l/min)	Press. Diff. (bar)	Temp. Fluido (°C)	Temp. Amb. (°C)
da	SB	2	2	10	-10	-10
a	SB	2.5	3	15	140	50

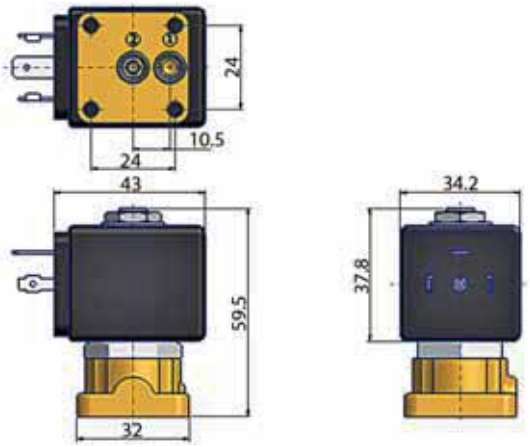

Disegno 007

2/2 VALVOLE PER ACQUA E LIQUIDI NEUTRI

COMANDO DIRETTO

OTTONE
MONTAGGIO SOTTOBASE
NORMALMENTE CHIUSA

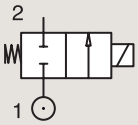

Raccordi	Orifizio Ø	Fattore Portata			Pressione differenziale			Temp. Fluido		Tenuta	Valvola PARKER LUCIFER®			Potenza		Gruppo Elettrico	Disegno nr.
					Min	Mass		Min	Mass		Valvola	Housing	Bobina				
	mm	Kv l/min	KV m³/h	Qn l/min	bar	AC bar	DC bar	°C	°C					AC W	DC W		
SB	1.5	1.5	0.09	80	0	20	20	-10	100	FKM	**E121F4406**	**2995**	**481865**	8	9	2.0	3509
	1.5	1.5	0.09	80	0	20	20	-10	120	FKM	**E121F4406**	**4270**	**481000**	8	8	2.0	3509
	1.5	1.5	0.09	80	0	20	20	-10	120	FKM	**E121F4406**	**4270**	**486265**	14	14	2.0	3509
	3	4.5	0.27	320	0	10	7	-10	100	FKM	**E121F4302**	**2995**	**481865**	8	9	2.0/3.0	3509
	3	4.5	0.27	320	0	10	8.5	-10	120	FKM	**E121F4302**	**4270**	**481000**	8	8	2.0/3.0	3509
	3	4.5	0.27	320	0	10	10	-10	120	FKM	**E121F4302**	**4270**	**486265**	14	14	2.0/3.0	3509

In questa pagina	Raccordi	Orifizio (mm)	Kv (l/min)	Press. Diff. (bar)	Temp. Fluido (°C)	Temp. Amb. (°C)
da	SB	1.5	1.5	7	-10	-10
a	SB	3	4.5	20	120	50

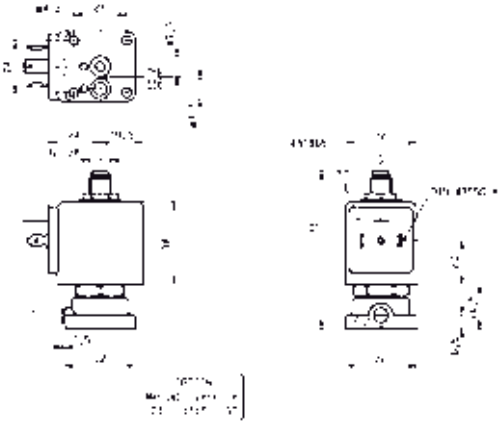

Disegno 3509

2/2 VALVOLE PER ACQUA E LIQUIDI NEUTRI

SERVOPILOTATA

Impianti Commerciali

Impianti Industriali

Medicale / Strumentazione

OTTONE
MONTAGGIO SU RACCORDI
NORMALMENTE CHIUSA

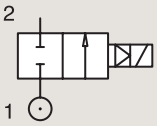

Raccordi	Orifizio Ø	Fattore portata			Pressione differenziale			Temp. Fluido		Tenuta	Valvola PARKER			Potenza		Gruppo Electtrico	Disegno nr.
					Min	Mass		Min	Mass		Codice di Ordinazione	Modello valvola	Modello bobina				
BSP	mm	Kv l/min	KV m³/h	Qn m³/h	bar	AC bar	DC bar	°C	°C					AC W	DC W		
3/8"	13	50	3	-	0.1	10	10	-10	140	EPDM	443778W [2]	7321BIH00	481865	8	9	2.0	028
	13	50	3	-	0.1	20	20	-10	90	NBR	443776W	7321BIN00	481865	8	9	2.0	028
	13	50	3	-	0.1	20	20	-10	90	NBR	443777W [1]	7321BIN01	481865	8	9	2.0	028
	13	50	3	-	0.1	20	20	-10	140	FKM	444492W	7321BIV00	481865	8	9	2.0	028
1/2"	13	50	3	-	0.1	10	10	-10	140	EPDM	443781W [2]	7321BAH00	481865	8	9	2.0	028
	13	50	3	-	0.1	20	20	-10	90	NBR	443779W	7321BAN00	481865	8	9	2.0	028
	13	50	3	-	0.1	20	20	-10	90	NBR	443780W [1]	7321BAN01	481865	8	9	2.0	028
	13	50	3	-	0.1	20	20	-10	140	FKM	444494W	7321BAV00	481865	8	9	2.0	028
3/4"	20	140	8.4	-	0.1	10	10	-10	140	EPDM	443785W [2]	7321BCH00	481865	8	9	2.0	057
	20	140	8.4	-	0.1	20	20	-10	90	NBR	443782W	7321BCN00	481865	8	9	2.0	057
	20	140	8.4	-	0.1	10	10	-10	90	NBR	443783W [1]	7321BCN01	481865	8	9	2.0	057
	20	140	8.4	-	0.1	20	20	-10	140	FKM	444497W	7321BCV00	481865	8	9	2.0	057
1"	25	160	9.6	-	0.1	10	10	-10	140	EPDM	443789W [2]	7321BDH00	481865	8	9	2.0	057
	25	160	9.6	-	0.1	20	20	-10	90	NBR	443786W	7321BDN00	481865	8	9	2.0	057
	25	160	9.6	-	0.1	10	10	-10	90	NBR	443787W [1]	7321BDN01	481865	8	9	2.0	057
	25	160	9.6	-	0.1	20	20	-10	140	FKM	443804W	7321BDV00	481865	8	9	2.0	057

Nota:

1. Con comando manuale
2. Pressione massima vapore: 4 bar (140°C)

In questa pagina	Raccordi	Orifizio (mm)	Kv (l/min)	Press. Diff. (bar)	Temp. Fluido (°C)	Temp. Amb. (°C)
da	3/8''	13	50	10	-10	-10
a	1''	25	160	20	140	50

G	A		B		C	
NPT	mm	inch	mm	inch	mm	inch
3/8"	89	3.71	99.5	3.91	40	1.57
1/2"	72	2.83	101.5	3.96	40	1.57

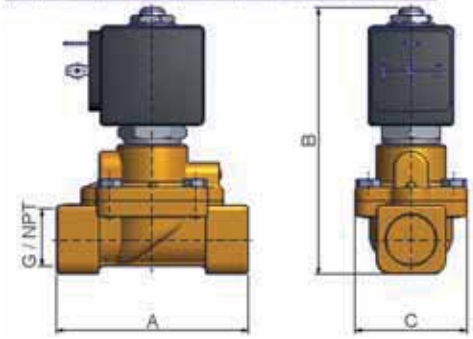

Disegno 028

G	A		B		C	
NPT	mm	inch	mm	inch	mm	inch
3/4"	100	3.93	107	4.21	65	2.55
1"	104	4.09	112.5	4.42	65	2.55

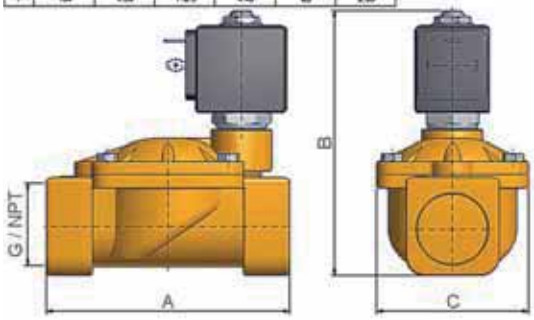

Disegno 057

2/2 VALVOLE PER ACQUA E LIQUIDI NEUTRI

SERVOPILOTATA

OTTONE
MONTAGGIO SU RACCORDI
NORMALMENTE CHIUSA

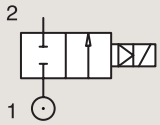

Raccordi	Orifizio Ø	Fattore portata			Pressione differenziale			Temp. Fluido		Tenuta	Valvola PARKER			Potenza		Gruppo Electtrico	Disegno nr.
					Min	Mass		Min	Mass		Codice di Ordinazione	Modello valvola	Modello bobina				
BSP	mm	Kv l/min	KV m³/h	Qn m³/h	bar	AC bar	DC bar	°C	°C					AC W	DC W		
1 1/4"	35	420	25.2	-	0.1	10	10	-10	140	EPDM	**443793W** [2]	**7321BEH00**	**481865**	8	9	2.0	058
	35	420	25.2	-	0.1	10	10	-10	90	NBR	**443790W**	**7321BEN00**	**481865**	8	9	2.0	058
	35	420	25.2	-	0.1	5	5	-10	90	NBR	**443791W** [1]	**7321BEN01**	**481865**	8	9	2.0	058
1 1/2"	40	500	30	-	0.1	10	10	-10	140	EPDM	**443797W** [2]	**7321BFH00**	**481865**	8	9	2.0	058
	40	500	30	-	0.1	10	10	-10	90	NBR	**443794W**	**7321BFN00**	**481865**	8	9	2.0	058
	40	500	30	-	0.1	5	5	-10	90	NBR	**443795W** [1]	**7321BFN01**	**481865**	8	9	2.0	058
2"	50	620	37.2	-	0.1	10	10	-10	140	EPDM	**443801W** [2]	**7321BGH00**	**481865**	8	9	2.0	058
	50	620	37.2	-	0.1	10	10	-10	90	NBR	**443798W**	**7321BGN00**	**481865**	8	9	2.0	058
	50	620	37.2	-	0.1	5	5	-10	90	NBR	**443799W** [1]	**7321BGN01**	**481865**	8	9	2.0	058

Nota:

1. Con comando manuale
2. Pressione massima vapore: 4 bar (140°C)

In questa pagina	Raccordi	Orifizio (mm)	Kv (l/min)	Press. Diff. (bar)	Temp. Fluido (°C)	Temp. Amb. (°C)
da	1 1/4''	35	420	5	-10	-10
a	2''	50	620	10	140	50

G	A		B		C	
NPT	mm	inch	mm	inch	mm	inch
1-1/4"	145	5.70	134	5.27	102	4.01
1-1/2"	145	5.70	134	5.27	102	4.01
2"	173	6.81	149	5.83	118	4.64

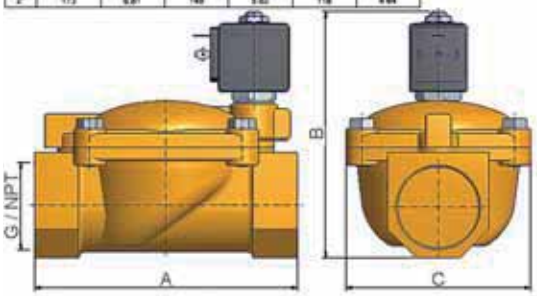

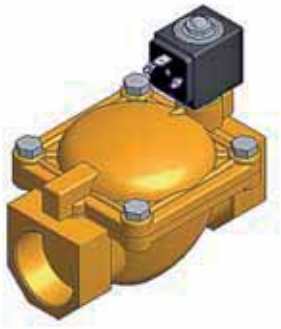

Disegno 058

2/2 VALVOLE PER ACQUA E LIQUIDI NEUTRI

SERVOPILOTATA

OTTONE
MONTAGGIO SU RACCORDI
NORMALMENTE CHIUSA

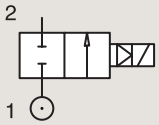

Raccordi	Orifizio Ø	Fattore Portata			Pressione differenziale			Temp. Fluido		Tenuta	Valvola PARKER LUCIFER®			Potenza		Gruppo Elettrico	Disegno nr.
					Min	Mass		Min	Mass		Valvola	Housing	Bobina				
BSP	mm	Kv l/min	KV m³/h	Qn l/min	bar	AC bar	DC bar	°C	°C					AC W	DC W		
1/4"	11	28	1.68	1800	0.2	10	3	-10	100	NBR	**E321K10**	**2995**	**481865**	8	9	2.0	3429
	11	28	1.68	1800	0.2	10	4	-10	100	NBR	**E321K10**	**4270**	**481000**	8	8	2.0	3429
	12	30	1.8	2150	0.3	10	10	-10	100	NBR	**321K31**	**8993**	**481180**	4	5	1.1	7093
	12	30	1.8	2150	0.3	10	7	-10	75	NBR	**321K31**	**8993**	**488980**	2	2.5	1.1	7093
	12	32	1.92	2150	0.3	12	12	-10	100	FKM	**321K4106**	**2995**	**481865**	8	9	2.1/3.0	7094
	12	32	1.92	2150	0.3	12	12	-10	120	FKM	**321K4106**	**4270**	**481000**	8	8	2.1/3.0	7094
3/8"	11	36	2.16	2500	0.2	10	4	-10	100	NBR	**E321K13**	**4270**	**481000**	8	8	2.0	3429
	11	36	2.16	2500	0.2	10	10	-10	100	NBR	**E321K13**	**4270**	**486265**	14	14	2.0	3429
	11	36	2.16	2500	0.2	10	-	-10	100	NBR	**E321K1314**	**2995**	**483466**	8 to 11	-	2.0	3429
	11	36	2.16	2500	0.2	10	10	-10	100	NBR	**E321K1314**	**4270**	**486265**	14	14	2.0	3429
	12	45	2.7	3050	0.3	10	10	-10	100	NBR	**321K33**	**8993**	**481180**	4	5	1.1	7093
	12	45	2.7	3050	0.3	10	7	-10	75	NBR	**321K33**	**8993**	**488980**	2	2.5	1.1	7093
	12	45	2.7	3050	0.3	12	12	-10	100	FKM	**321K4306**	**2995**	**481865**	8	9	2.1/3.0	7094
	12	45	2.7	3050	0.3	12	12	-10	120	FKM	**321K4306**	**4270**	**481000**	8	8	2.1/3.0	7094

In questa pagina	Raccordi	Orifizio (mm)	Kv (l/min)	Press. Diff. (bar)	Temp. Fluido (°C)	Temp. Amb. (°C)
da	1/4"	11	28	3	-10	-10
a	3/8"	12	45	12	120	50

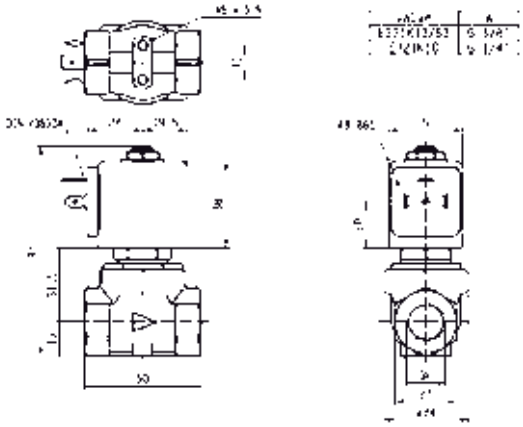

Disegno 3429

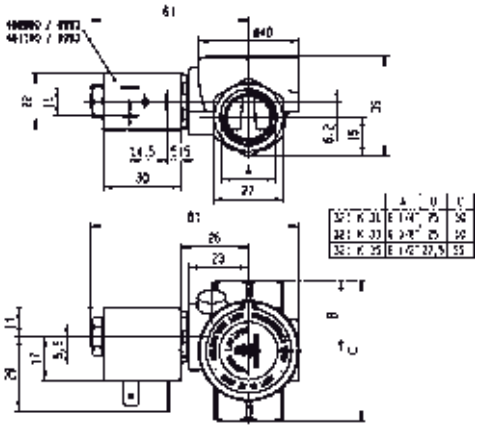

Disegno 7093

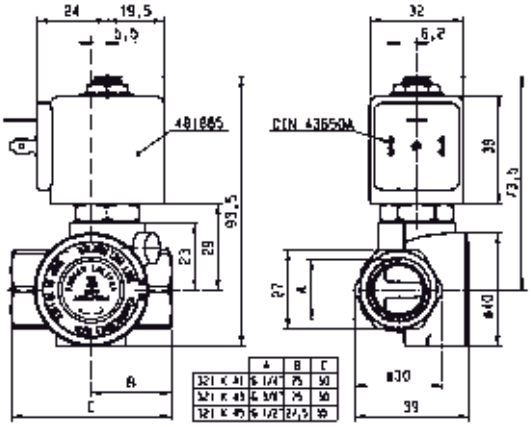

Disegno 7094

2/2 VALVOLE PER ACQUA E LIQUIDI NEUTRI

SERVOPILOTATA

OTTONE
MONTAGGIO SU RACCORDI
NORMALMENTE CHIUSA

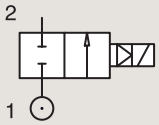

Raccordi	Orifizio Ø	Fattore Portata			Pressione differenziale			Temp. Fluido		Tenuta	Valvola PARKER LUCIFER®			Potenza		Gruppo Elettrico	Disegno nr.
					Min	Mass		Min	Mass		Valvola	Housing	Bobina				
BSP	mm	Kv l/min	KV m³/h	Qn l/min	bar	AC bar	DC bar	°C	°C					AC W	DC W		
1/2"	11	36	2.16	2500	0.2	10	3	-10	100	NBR	**E321K15**	**2995**	**481865**	8	9	2.0	3427
	11	36	2.16	2500	0.2	10	10	-10	120	NBR	**E321K15**	**4270**	**486265**	14	14	2.0	3427
	11	36	2.16	2500	0.2	10	3	-10	100	NBR	**E321K1514**	**2995**	**481865**	8	9	2.0	3427
	11	36	2.16	2500	0.2	10	4	-10	120	NBR	**E321K1514**	**-**	**483371**	8	8	2.0	3427
	11	36	2.16	2500	0.2	10	3	-10	100	NBR	**E321K25**	**2995**	**481865**	8	9	2.0	3427
	11	36	2.16	2500	0.2	4	4	-10	120	NBR	**E321K25**	**-**	**492070**	9	8	2.0	3427
	12	50	3	3400	0.3	10	10	-10	100	NBR	**321K35**	**8993**	**481180**	4	5	1.1	7093
	12	50	3	3400	0.3	10	7	-10	75	NBR	**321K35**	**8993**	**488980**	2	2.5	1.1	7093
	12	50	3	3400	0.3	12	12	-10	100	FKM	**321K4506**	**2995**	**481865**	8	9	2.1/3.0	7094
	12	50	3	3400	0.3	12	12	-10	120	FKM	**321K4506**	**4270**	**481000**	8	8	2.1/3.0	7094
	12	50	3	3400	0.3	12	12	-10	100	FKM	**321K4556** [1]	**2995**	**481865**	8	9	2.1/3.0	7094
	12	50	3	3400	0.3	12	12	-10	120	FKM	**321K4556** [1]	**4270**	**481000**	8	8	2.1/3.0	7094

Nota:

1. Con comando manuale

In questa pagina	Raccordi	Orifizio (mm)	Kv (l/min)	Press. Diff. (bar)	Temp. Fluido (°C)	Temp. Amb. (°C)
da	1/2"	11	36	3	-10	-10
a	1/2"	12	50	12	120	50

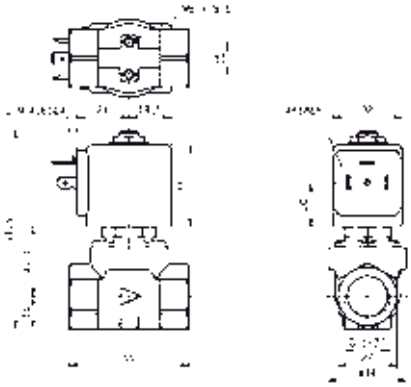

Disegno 3427

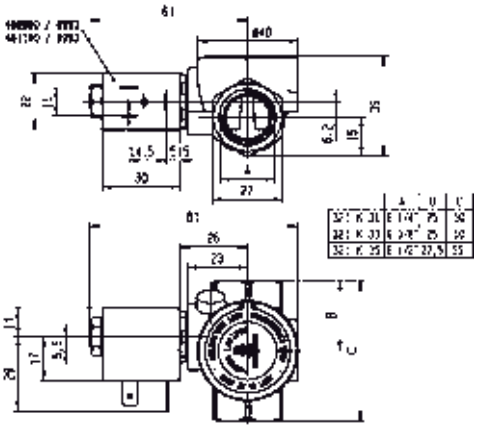

Disegno 7093

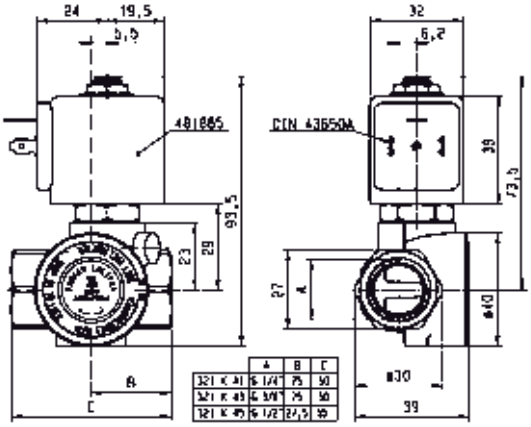

Disegno 7094

2/2 VALVOLE PER ACQUA E LIQUIDI NEUTRI

SERVOPILOTATA

OTTONE
MONTAGGIO SU RACCORDI
NORMALMENTE CHIUSA

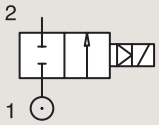

Raccordi	Orifizio Ø	Fattore Portata			Pressione differenziale			Temp. Fluido		Tenuta	Valvola PARKER LUCIFER®			Potenza		Gruppo Elettrico	Disegno nr.
					Min	Mass		Min	Mass		Valvola	Housing	Bobina				
BSP	mm	Kv l/min	KV m³/h	Qn l/min	bar	AC bar	DC bar	°C	°C					AC W	DC W		
3/4"	18	100	6	9400	0.3	10	10	-10	100	NBR	**321K36**	**8993**	**481180**	4	5	1.1	7097
	18	100	6	9400	0.3	10	7	-10	75	NBR	**321K36**	**8993**	**488980**	2	2.5	1.1	7097
	18	100	6	9400	0.3	12	12	-10	100	FKM	**321K4606**	**2995**	**481865**	8	9	2.1/3.0	7099
	18	100	6	9400	0.3	12	12	-10	120	FKM	**321K4606**	**4270**	**481000**	8	8	2.1/3.0	7099
	18	100	6	9400	0.3	12	12	-10	100	FKM	**321K4656** [1]	**2995**	**481865**	8	9	2.1/3.0	7099
	18	100	6	9400	0.3	12	12	-10	120	FKM	**321K4656** [1]	**4270**	**481000**	8	8	2.1/3.0	7099
	20	135	8.1	9500	0.3	16	16	-10	100	NBR	**E321G36**	**2995**	**481865**	8	9	2.0	3442
	20	135	8.1	9500	0.3	16	16	-10	100	NBR	**E321G36**	**4270**	**481000**	8	8	2.0	3442

Nota:

1. Con comando manuale

In questa pagina	Raccordi	Orifizio (mm)	Kv (l/min)	Press. Diff. (bar)	Temp. Fluido (°C)	Temp. Amb. (°C)
da	3/4"	18	100	7	-10	-10
a	3/4"	20	135	16	120	50

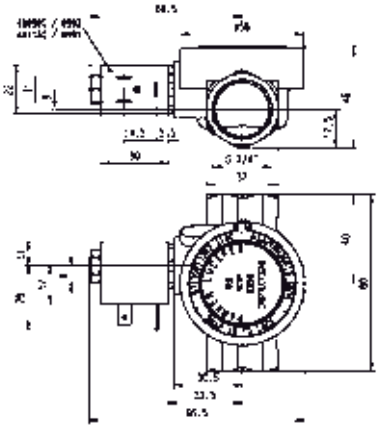

Disegno 7097

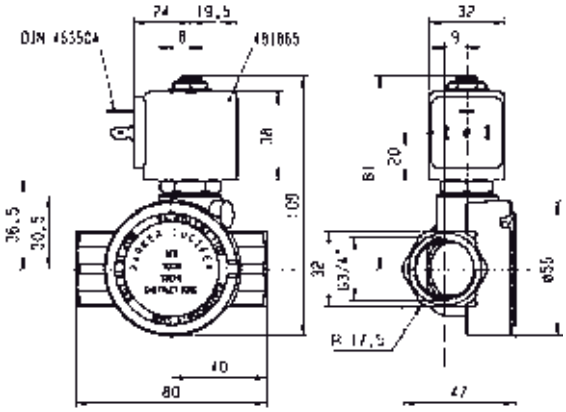

Disegno 7099

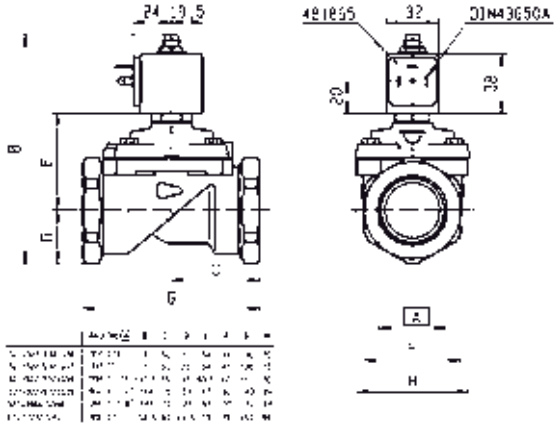

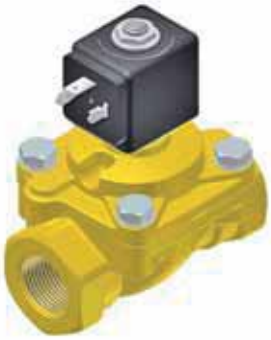

Disegno 3442

2/2 VALVOLE PER ACQUA E LIQUIDI NEUTRI

SERVOPILOTATA

OTTONE
MONTAGGIO SU RACCORDI
NORMALMENTE CHIUSA

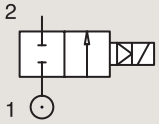

Raccordi	Orifizio Ø	Fattore Portata			Pressione differenziale			Temp. Fluido		Tenuta	Valvola PARKER LUCIFER®			Potenza		Gruppo Elettrico	Disegno nr.
					Min	Mass		Min	Mass		Valvola	Housing	Bobina				
BSP	mm	Kv l/min	KV m³/h	Qn l/min	bar	AC bar	DC bar	°C	°C					AC W	DC W		
1"	18	110	6.6	10150	0.3	10	10	-10	100	NBR	**321K37**	**8993**	**481180**	4	5	1.1	7098
	18	110	6.6	10150	0.3	10	7	-10	75	NBR	**321K37**	**8993**	**488980**	2	2.5	1.1	7098
	18	110	6.6	10150	0.3	12	12	-10	100	FKM	**321K4706**	**2995**	**481865**	8	9	2.1/3.0	7100
	18	110	6.6	10150	0.3	12	12	-10	120	FKM	**321K4706**	**4270**	**481000**	8	8	2.1/3.0	7100
	18	110	6.6	10150	0.3	12	12	-10	100	FKM	**321K4756** [1]	**2995**	**481865**	8	9	2.1/3.0	7100
	18	110	6.6	10150	0.3	12	12	-10	120	FKM	**321K4756** [1]	**4270**	**481000**	8	8	2.1/3.0	7100
	25	180	10.8	14000	0.3	16	16	-10	100	NBR	**E321G37**	**2995**	**481865**	8	9	2.0	3442
	25	180	10.8	14000	0.3	16	16	-10	100	NBR	**E321G37**	**4270**	**481000**	8	8	2.0	3442
	28	270	16.2	18000	0.3	16	16	-10	100	NBR	**E321G38**	**2995**	**481865**	8	9	2.0	3442
	28	270	16.2	18000	0.3	16	16	-10	100	NBR	**E321G38**	**4270**	**481000**	8	8	2.0	3442
1 1/2"	40	420	25.2	31500	0.3	16	7	-10	100	NBR	**E321G39** [2]	**2995**	**481865**	8	9	2.0	3442
	40	420	25.2	31500	0.3	16	8.5	-10	100	NBR	**E321G39** [2]	**4270**	**481000**	8	8	2.0	3442
2"	40	540	32.4	40000	0.3	16	7	-10	100	NBR	**E321G40** [2]	**2995**	**481865**	8	9	2.0	3442
	40	540	32.4	40000	0.3	16	8.5	-10	100	NBR	**E321G40** [2]	**4270**	**481000**	8	8	2.0	3442

Nota:

1. Con comando manuale
2. Pilota con tenuta in Rubino sintetico

In questa pagina	Raccordi	Orifizio (mm)	Kv (l/min)	Press. Diff. (bar)	Temp. Fluido (°C)	Temp. Amb. (°C)
da	1''	18	110	7	-10	-10
a	2''	40	540	16	120	50

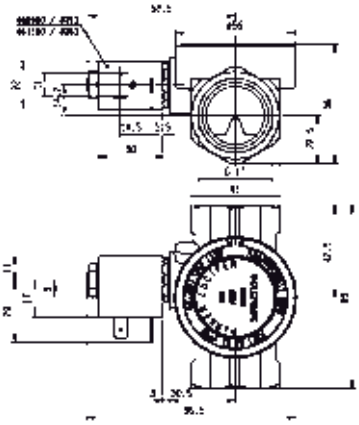

Disegno 7098

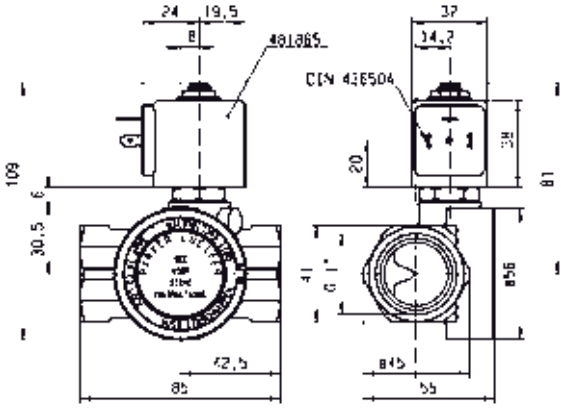

Disegno 7100

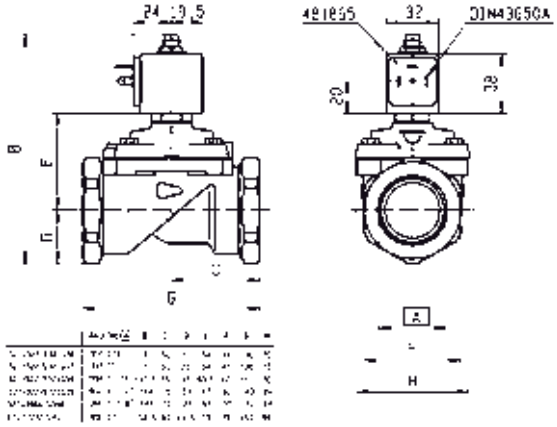

Disegno 3442

2/2 VALVOLE PER ACQUA E LIQUIDI NEUTRI

SERVOPILOTATA

OTTONE
MONTAGGIO SU RACCORDI
NORMALMENTE APERTA

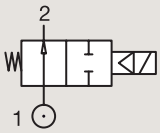

Raccordi	Orifizio Ø	Fattore portata			Pressione differenziale			Temp. Fluido		Tenuta	Valvola PARKER			Potenza		Gruppo Electtrico	Disegno nr.
					Min	Mass		Min	Mass								
BSP	mm	Kv l/min	KV m³/h	Qn m³/h	bar	AC bar	DC bar	°C	°C		Codice di Ordinazione	Modello valvola	Modello bobina	AC W	DC W		
3/8"	13	50	3	-	0.1	10	10	-10	140	EPDM	444600W	7322BIH00	481865	8	9	2.0	060
	13	50	3	-	0.1	20	20	-10	90	NBR	443805W	7322BIN00	481865	8	9	2.0	060
	13	50	3	-	0.1	20	20	-10	140	FKM	444499W	7322BIV00	481865	8	9	2.0	060
1/2"	13	50	3	-	0.1	10	10	-10	140	EPDM	444601W	7322BAH00	481865	8	9	2.0	060
	13	50	3	-	0.1	20	20	-10	90	NBR	443806W	7322BAN00	481865	8	9	2.0	060
	13	50	3	-	0.1	20	20	-10	140	FKM	444500W	7322BAV00	481865	8	9	2.0	060
3/4"	20	140	8.4	-	0.1	10	10	-10	140	EPDM	444602W	7322BCH00	481865	8	9	2.0	061
	20	140	8.4	-	0.1	20	20	-10	90	NBR	443807W	7322BCN00	481865	8	9	2.0	061
	20	140	8.4	-	0.1	20	20	-10	140	FKM	444501W	7322BCV00	481865	8	9	2.0	061
1"	25	160	9.6	-	0.1	10	10	-10	140	EPDM	444603W	7322BDH00	481865	8	9	2.0	061
	25	160	9.6	-	0.1	20	20	-10	90	NBR	443808W	7322BDN00	481865	8	9	2.0	061
	25	160	9.6	-	0.1	20	20	-10	140	FKM	444502W	7322BDV00	481865	8	9	2.0	061
1 1/4"	35	420	25.2	-	0.1	10	10	-10	140	EPDM	444576W	7322BEH00	481865	8	9	2.0	062
	35	420	25.2	-	0.1	10	10	-10	90	NBR	443809W	7322BEN00	481865	8	9	2.0	062
1 1/2"	40	500	30	-	0.1	10	10	-10	140	EPDM	444604W	7322BFH00	481865	8	9	2.0	062
	40	500	30	-	0.1	10	10	-10	90	NBR	443810W	7322BFN00	481865	8	9	2.0	062
2"	50	620	37.2	-	0.1	10	10	-10	140	EPDM	444605W	7322BGH00	481865	8	9	2.0	062
	50	620	37.2	-	0.1	10	10	-10	90	NBR	443811W	7322BGN00	481865	8	9	2.0	062
2 1/2"	65	1100	66	-	0.2	10	10	-10	90	NBR	444513W	7322BLN06	481865	8	9	2.0	063
3"	75	1334	80	-	0.2	10	10	-10	90	NBR	444503W	7322BMN06	481865	8	9	2.0	063

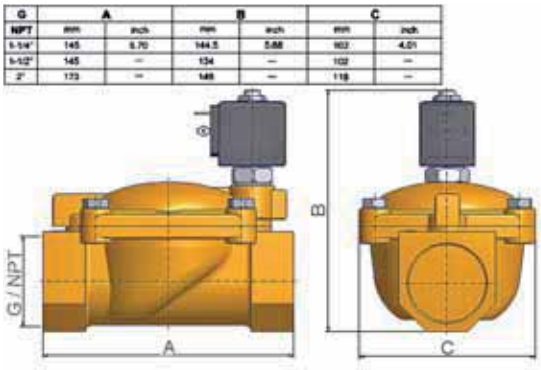

Disegno 062

In questa pagina	Raccordi	Orifizio (mm)	Kv (l/min)	Press. Diff. (bar)	Temp. Fluido (°C)	Temp. Amb. (°C)
da	3/8''	13	50	10	-10	-10
a	3''	75	1334	20	140	50

G	A		B		C	
NPT	mm	inch	mm	inch	mm	inch
3/8"	69	2.71	110	4.33	40	1.57
1/2"	72	2.83	112	4.41	40	1.57

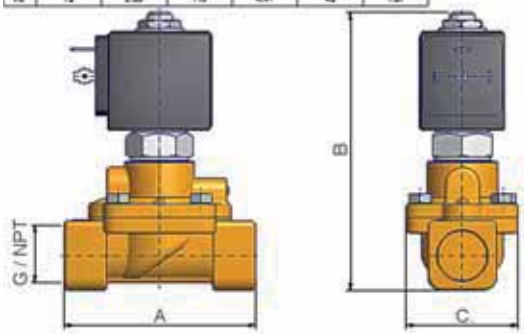

Disegno 060

G	A		B		C	
NPT	mm	inch	mm	inch	mm	inch
3/4"	100	3.83	117.5	4.62	65	2.55
1"	104	4.09	123	4.84	65	2.55

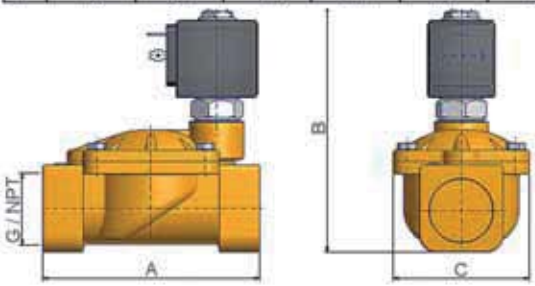

Disegno 061

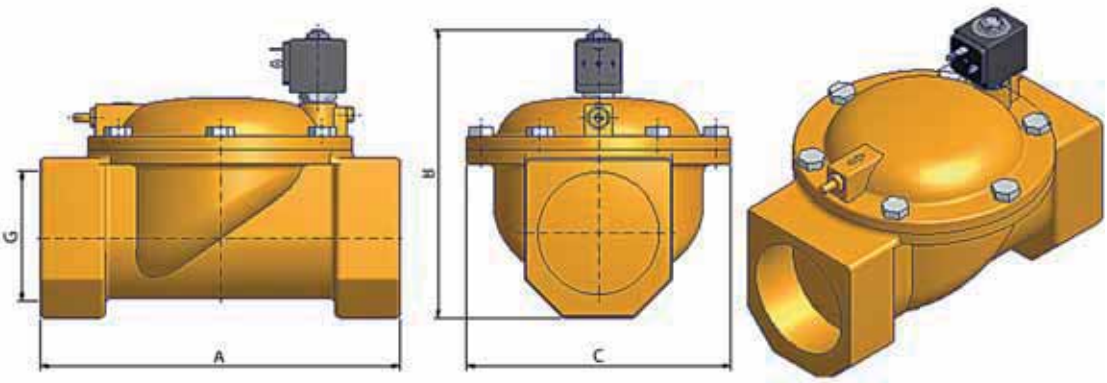

Disegno 063

2/2 VALVOLE PER ACQUA E LIQUIDI NEUTRI

SERVOPILOTATA

OTTONE
MONTAGGIO SU RACCORDI
NORMALMENTE APERTA

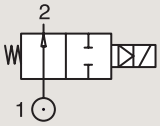

Raccordi	Orifizio Ø	Fattore Portata			Pressione differenziale			Temp. Fluido		Tenuta	Valvola PARKER LUCIFER®			Potenza		Gruppo Elettrico	Disegno nr.
					Min	Mass		Min	Mass		Valvola	Housing	Bobina				
BSP	mm	Kv l/min	KV m³/h	Qn l/min	bar	AC bar	DC bar	°C	°C					AC W	DC W		
1/4"	12	32	1.92	2150	0.3	12	12	-10	100	FKM	322K4106	2995	481865	8	9	2.1	7094
	12	32	1.92	2150	0.3	12	12	-10	120	FKM	322K4106	4270	481000	8	8	2.1	7094
3/8"	12	45	2.7	3050	0.3	12	12	-10	100	FKM	322K4306	2995	481865	8	9	2.1	7094
	12	45	2.7	3050	0.3	12	12	-10	120	FKM	322K4306	4270	481000	8	8	2.1	7094
1/2"	12	50	3	3400	0.3	12	12	-10	100	FKM	322K4506	2995	481865	8	9	2.1	7094
	12	50	3	3400	0.3	12	12	-10	120	FKM	322K4506	4270	481000	8	8	2.1	7094
	15	60	3.6	3890	0.3	15	15	-10	100	NBR	322G75	2995	481865	8	9	2.1	3522
	15	60	3.6	3890	0.3	15	15	-10	100	NBR	322G75	4270	481000	8	8	2.1	3522
3/4"	18	100	6	9400	0.3	12	12	-10	100	FKM	322K4606	2995	481865	8	9	2.1	7099
	18	100	6	9400	0.3	12	12	-10	120	FKM	322K4606	4270	481000	8	8	2.1	7099
	20	135	8.1	9500	0.3	16	16	-10	100	NBR	322G36	2995	481865	8	9	2.1	3442
	20	135	8.1	9500	0.3	16	16	-10	100	NBR	322G36	4270	481000	8	8	2.1	3442

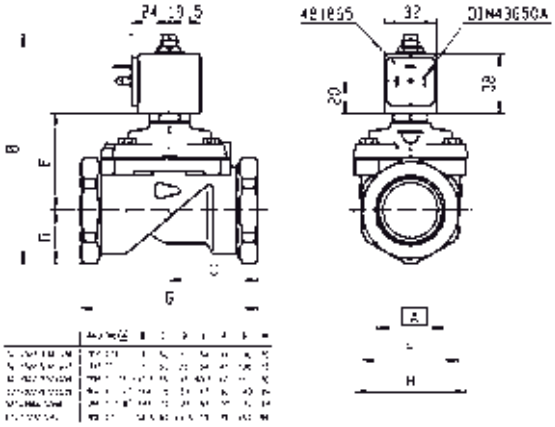

Disegno 3442

In questa pagina	Raccordi	Orifizio (mm)	Kv (l/min)	Press. Diff. (bar)	Temp. Fluido (°C)	Temp. Amb. (°C)
da	1/4"	12	32	12	-10	-10
a	3/4"	20	135	16	120	50

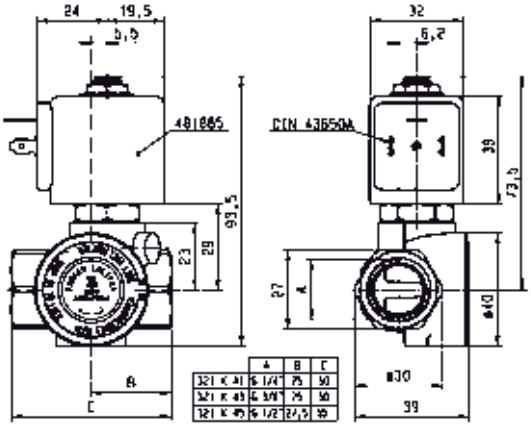

Disegno 7094

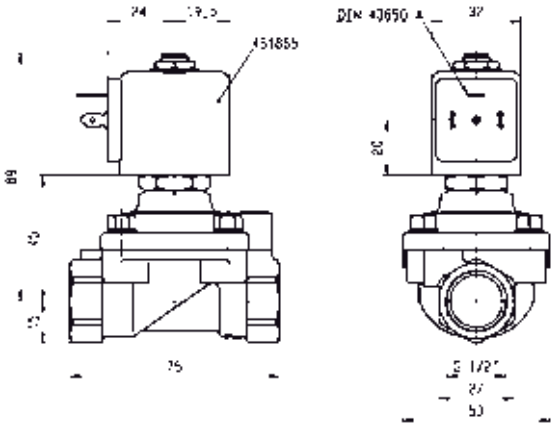

Disegno 3522

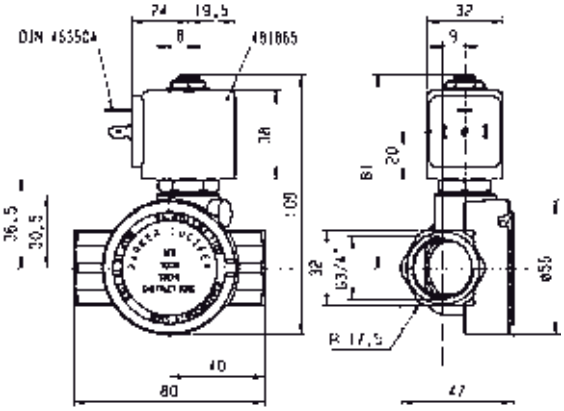

Disegno 7099

2/2 VALVOLE PER ACQUA E LIQUIDI NEUTRI

SERVOPILOTATA

OTTONE
MONTAGGIO SU RACCORDI
NORMALMENTE APERTA

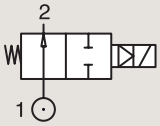

Raccordi	Orifizio Ø	Fattore Portata			Pressione differenziale			Temp. Fluido		Tenuta	Valvola PARKER LUCIFER®			Potenza		Gruppo Elettrico	Disegno nr.
					Min	Mass		Min	Mass		Valvola	Housing	Bobina				
BSP	mm	Kv l/min	KV m³/h	Qn l/min	bar	AC bar	DC bar	°C	°C					AC W	DC W		
1"	18	110	6.6	10150	0.3	12	12	-10	100	FKM	**322K4706**	**2995**	**481865**	8	9	2.0	7100
	18	110	6.6	10150	0.3	12	12	-10	120	FKM	**322K4706**	**4270**	**481000**	8	8	2.0	7100
	25	180	10.8	14000	0.3	16	16	-10	100	NBR	**322G37**	**2995**	**481865**	8	9	2.1	3442
	25	180	10.8	14000	0.3	16	16	-10	100	NBR	**322G37**	**4270**	**481000**	8	8	2.1	3442
1 1/2"	40	420	25.2	31500	0.3	12	12	-10	100	NBR	**322G39**	**2995**	**481865**	8	9	2.1	3442
	40	420	25.2	31500	0.3	12	12	-10	100	NBR	**322G39**	**4270**	**481000**	8	8	2.1	3442

OTTONE
MONTAGGIO SOTTOBASE
NORMALMENTE CHIUSA

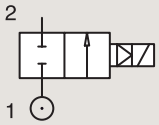

Raccordi	Orifizio Ø	Fattore Portata			Pressione differenziale			Temp. Fluido		Tenuta	Valvola PARKER LUCIFER®			Potenza		Gruppo Elettrico	Disegno nr.
					Min	Mass		Min	Mass		Valvola	Housing	Bobina				
	mm	Kv l/min	KV m³/h	Qn l/min	bar	AC bar	DC bar	°C	°C					AC W	DC W		
SB	14	45	2.7	2100	0.3	40	25	-10	100	NBR	**E321F32** [1]	**2995**	**481865**	8	9	2.0	3520
	14	45	2.7	2100	0.3	40	30	-10	100	NBR	**E321F32** [1]	**4270**	**481000**	8	8	2.0	3520
	14	45	2.7	2100	0.3	40	40	-10	100	NBR	**E321F32** [1]	**4270**	**486265**	14	14	2.0	3520

Nota:

1. Pilota con tenuta in Rubino sintetico

In questa pagina	Raccordi	Orifizio (mm)	Kv (l/min)	Press. Diff. (bar)	Temp. Fluido (°C)	Temp. Amb. (°C)
da	SB	14	45	12	-10	-10
a	1 1/2"	40	420	40	120	50

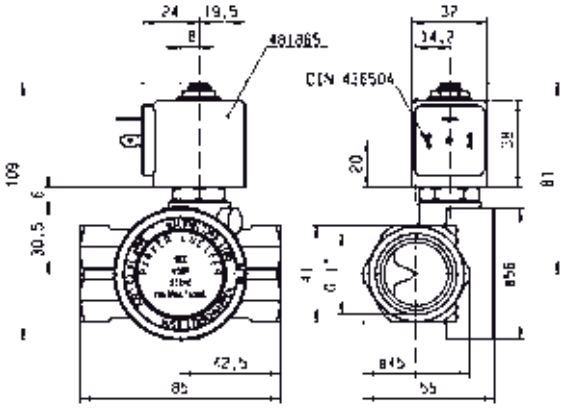

Disegno 7100

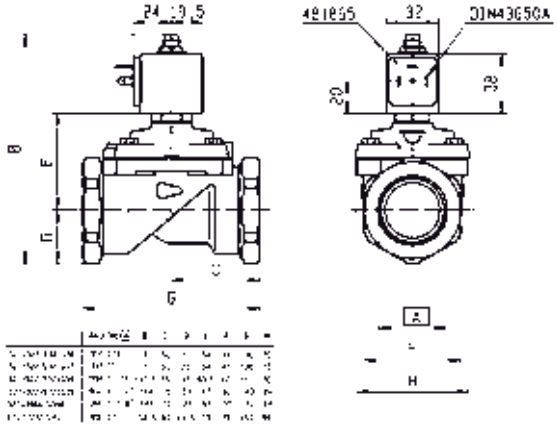

Disegno 3442

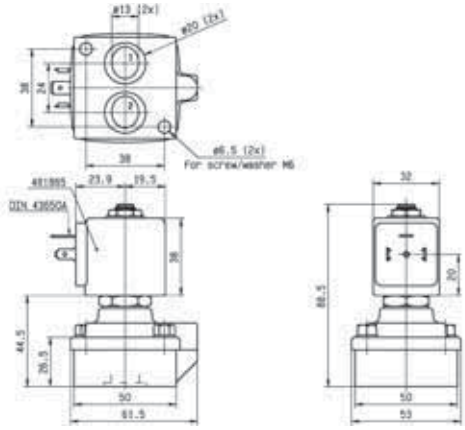

Disegno 3520

VALVOLE CON SISTEMA DI ATTENUAZIONE DEL COLPO D'ARIETE.

Acqua

2/2

Azionamento	Corpo	Funzione	Raccordi	Orifizio (mm)	Fattore Portata	Pressione Differenziale Mass. (Bar)	Temp. Mass. Fluido	Pagina Elettrovalvola Parker	Pagina Elettrovalvola Parker LUCIFER®
Magnalift	**Ottone/Raccordi**	**Normalmente chiusa**	1''	15 a 25	170	10	140	-	**114**
Servopilotata	**Ottone/Raccordi**	**Normalmente chiusa**	1/4''	12	32	12	120	-	**118**
			3/8''	12	45	12	120	-	**118**
			1/2''	12	50	12	120	-	**118**
			3/4''	18 a 20	135	16	120	-	**118**
			1''	18 a 25	180	16	120	**116**	**120**
			1 1/4''	25 a 28	280	16	100	**116**	**120**
			1 1/2''	35 a 40	500	16	100	**116**	**120**
			2''	40 a 50	620	16	100	**116**	**120**
			2 1/2''	65	1100	10	90	**116**	-
			3''	75	1334	10	90	**116**	-
		Normalmente aperta	3/4''	20	135	16	100	-	**122**
			1''	25	180	16	100	-	**122**
			1 1/4''	28	270	16	100	-	**122**
			1 1/2''	40	425	12	100	-	**122**
			2''	40	540	12	100	-	**122**

2/2 VALVOLE CON SISTEMA ATTENUAZIONE COLPO DI ARIETE
MAGNALIFT

Impianti Commerciali

OTTONE
MONTAGGIO SU RACCORDI
NORMALMENTE CHIUSA

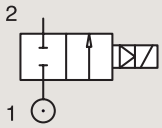

Raccordi	Orifizio Ø	Fattore Portata			Pressione differenziale			Temp. Fluido		Tenuta	Valvola PARKER LUCIFER®			Potenza		Gruppo Elettrico	Disegno nr.
					Min	Mass		Min	Mass		Valvola	Housing	Bobina				
BSP	mm	Kv l/min	KV m³/h	Qn l/min	bar	AC bar	DC bar	°C	°C					AC W	DC W		
1"	15	80	4.8	6000	0	-	10	-10	100	NBR	221G1731 12	2995	481865	-	9	2.1	3445
	15	80	4.8	6000	0	10	10	-10	120	NBR	221G1731 12	-	492070	9	8	2.1	3445
	15	80	4.8	6000	0	10	10	-10	120	NBR	221G1731 12	-	492190	11	9	2.1	3445
	25	160	9.6	-	0	10	-	0	100	EPDM	221G2103	2995	481865	8	-	2.0	3448
	25	160	9.6	-	0	10	-	0	120	EPDM	221G2103	4270	481000	8	-	2.0	3448
	25	160	9.6	-	0	10	10	0	120	EPDM	221G2103	4270	486265	14	14	2.0	3448
	25	160	9.6	-	0	4	4	0	140	EPDM	221G2103	2995	492425	14	14	2.0	3448
	25	170	10.2	14000	0	-	10	-10	100	NBR	221G2131 12	2995	481865	-	9	2.1	3448
	25	170	10.2	14000	0	10	10	-25	40	NBR	221G2131 12	-	492070	9	8	2.1	3448
	25	170	10.2	14000	0	10	10	-25	40	NBR	221G2131 12	-	492190	11	9	2.1	3448

Nota:

1. Con selezionatore a 4 posizioni per controllo tempo di chiusura
2. Valvole con la cui designazione termina con 30 o 31 sono compatibile con le parti elettriche elencate o con le bobine del gruppo 2.1 in tensione DCC

In questa pagina	Raccordi	Orifizio (mm)	Kv (l/min)	Press. Diff. (bar)	Temp. Fluido (°C)	Temp. Amb. (°C)
da	1''	15	80	4	-25	-10
a	1''	25	170	10	140	50

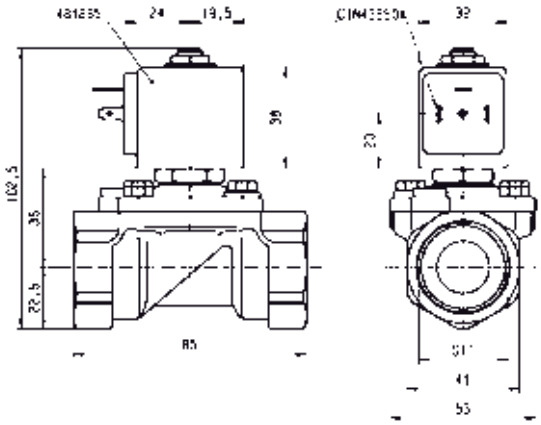

Disegno 3445

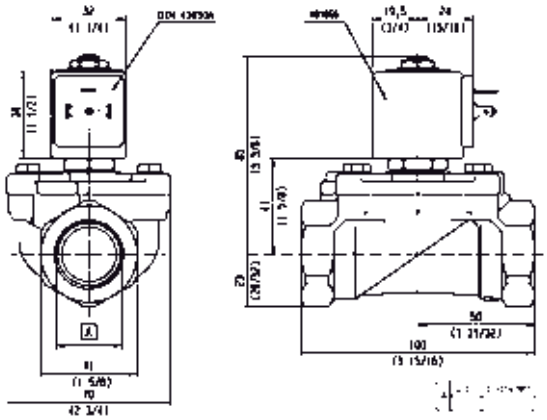

Disegno 3448

2/2 VALVOLE CON SISTEMA ATTENUAZIONE COLPO DI ARIETE
SERVOPILOTATA

Impianti Commerciali

Impianti Industriali

Medical / Instrumentation

OTTONE
MONTAGGIO SU RACCORDI
NORMALMENTE CHIUSA

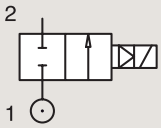

Raccordi	Orifizio Ø	Fattore portata			Pressione differenziale			Temp. Fluido		Tenuta	Valvola PARKER			Potenza		Gruppo Electtrico	Disegno nr.
					Min	Mass		Min	Mass		Codice di Ordinazione	Modello valvola	Modello bobina				
BSP	mm	Kv l/min	KV m^3/h	Qn m^3/h	bar	AC bar	DC bar	°C	°C					AC W	DC W		
3/4"	20	140	8.4	-	0.1	10	10	-10	90	NBR	443784W[1]	7321BCN02	481865	8	9	2.0	057
1"	25	160	9.6	-	0.1	10	10	-10	90	NBR	443788W[1]	7321BDN02	481865	8	9	2.0	057
1 1/4"	35	420	25.2	-	0.1	5	5	-10	90	NBR	443792W[1]	7321BEN02	481865	8	9	2.0	058
1 1/2"	40	500	30	-	0.1	5	5	-10	90	NBR	443796W[1]	7321BFN02	481865	8	9	2.0	058
2"	50	620	37.2	-	0.1	5	5	-10	90	NBR	443800W[1]	7321BGN02	481865	8	9	2.0	058
2 1/2"	65	1100	66	-	0.2	10	10	-10	90	NBR	443802W[1]	7321BLN02	481865	8	9	2.0	059
3"	75	1334	80	-	0.2	10	10	-10	90	NBR	443803W[1]	7321BMN02	481865	8	9	2.0	059

Nota:

1. Con comando manuale

In questa pagina	Raccordi	Orifizio (mm)	Kv (l/min)	Press. Diff. (bar)	Temp. Fluido (°C)	Temp. Amb. (°C)
da	1''	20	140	5	-10	-10
a	3''	75	1334	10	90	50

G	A		B		C	
NPT	mm	inch	mm	inch	mm	inch
3/4"	103	5.83	107	4.21	65	2.55
1"	104	4.09	112.5	4.43	65	2.55

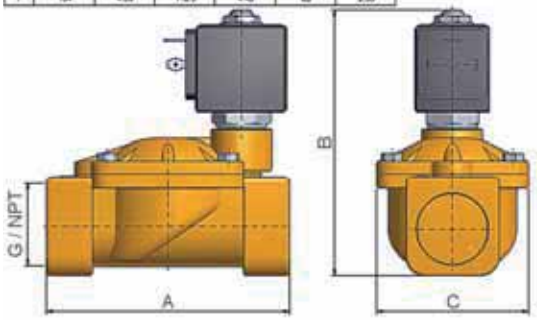

Disegno 057

G	A		B		C	
NPT	mm	inch	mm	inch	mm	inch
1-1/4"	145	5.70	134	5.27	102	4.01
1-1/2"	145	5.70	134	5.27	102	4.01
2"	173	6.81	149	5.83	118	4.64

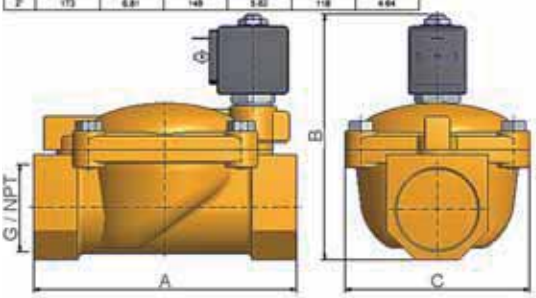

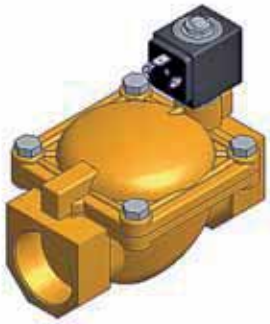

Disegno 058

G	A		B		C	
	mm	inch	mm	inch	mm	inch
2-1/2"	245	—	195	—	184	—
3"	250	—	195	—	184	—

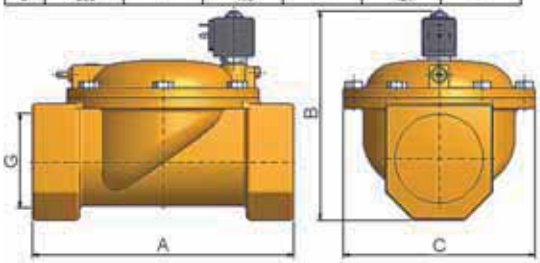

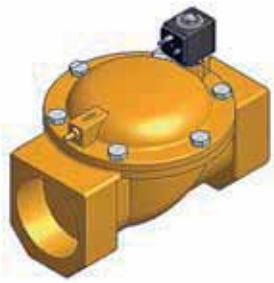

Disegno 059

2/2 VALVOLE CON SISTEMA ATTENUAZIONE COLPO DI ARIETE
SERVOPILOTATA

OTTONE
MONTAGGIO SU RACCORDI
NORMALMENTE CHIUSA

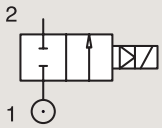

Raccordi	Orifizio Ø	Fattore Portata			Pressione differenziale			Temp. Fluido		Tenuta	Valvola PARKER LUCIFER®			Potenza		Gruppo Elettrico	Disegno nr.
					Min	Mass		Min	Mass		Valvola	Housing	Bobina				
BSP	mm	Kv l/min	KV m³/h	Qn l/min	bar	AC bar	DC bar	°C	°C					AC W	DC W		
1/4"	12	32	1.92	2150	0.3	12	12	-10	100	FKM	**321K4106**	**2995**	**481865**	8	9	2.1/3.0	7094
	12	32	1.92	2150	0.3	12	12	-10	120	FKM	**321K4106**	**4270**	**481000**	8	8	2.1/3.0	7094
3/8"	12	45	2.7	3050	0.3	12	12	-10	100	FKM	**321K4306**	**2995**	**481865**	8	9	2.1/3.0	7094
	12	45	2.7	3050	0.3	12	12	-10	120	FKM	**321K4306**	**4270**	**481000**	8	8	2.1/3.0	7094
1/2"	12	50	3	3400	0.3	12	12	-10	100	FKM	**321K4506**	**2995**	**481865**	8	9	2.1/3.0	7094
	12	50	3	3400	0.3	12	12	-10	120	FKM	**321K4506**	**4270**	**481000**	8	8	2.1/3.0	7094
	12	50	3	3400	0.3	12	12	-10	100	FKM	**321K4556** [1]	**2995**	**481865**	8	9	2.1/3.0	7094
	12	50	3	3400	0.3	12	12	-10	120	FKM	**321K4556** [1]	**4270**	**481000**	8	8	2.1/3.0	7094
3/4"	18	100	6	9400	0.3	12	12	-10	100	FKM	**321K4606**	**2995**	**481865**	8	9	2.1/3.0	7099
	18	100	6	9400	0.3	12	12	-10	120	FKM	**321K4606**	**4270**	**481000**	8	8	2.1/3.0	7099
	18	100	6	9400	0.3	12	12	-10	100	FKM	**321K4656** [1]	**2995**	**481865**	8	9	2.1/3.0	7099
	18	100	6	9400	0.3	12	12	-10	120	FKM	**321K4656** [1]	**4270**	**481000**	8	8	2.1/3.0	7099
	20	135	8.1	9500	0	16	16	-10	100	NBR	**E321G3610** [2]	**2995**	**481865**	8	9	2.0	3442
	20	135	8.1	9500	0	16	16	-10	100	NBR	**E321G3610** [2]	**4270**	**481000**	8	8	2.0	3442

Nota:

1. Con comando manuale
2. Con comando manuale econ selezionatore a 4 posizioni per controllo tempo di chiusura - Senza questa opzione : lo stesso suffisso di riferimento PROBLEMI '10', ex. E321G36.

In questa pagina	Raccordi	Orifizio (mm)	Kv (l/min)	Press. Diff. (bar)	Temp. Fluido (°C)	Temp. Amb. (°C)
da	1/4"	12	32	12	-10	-10
a	3/4"	20	135	16	120	50

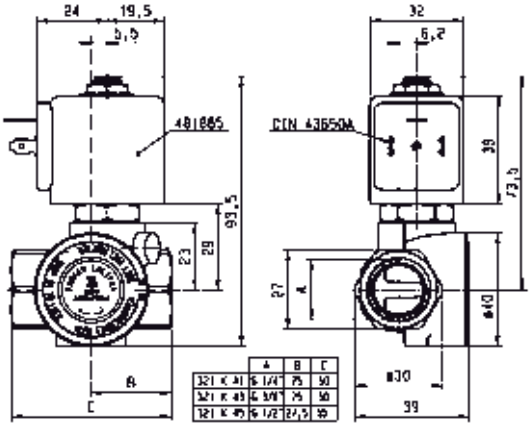

Disegno 7094

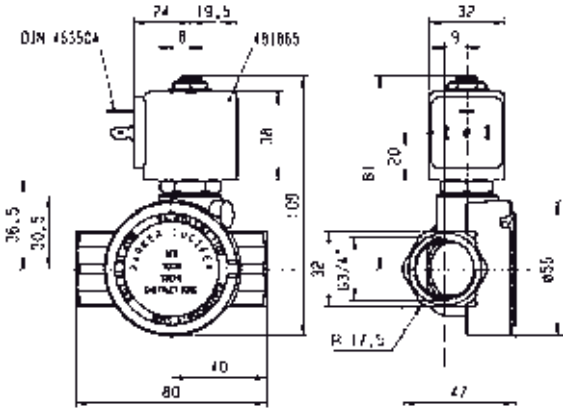

Disegno 7099

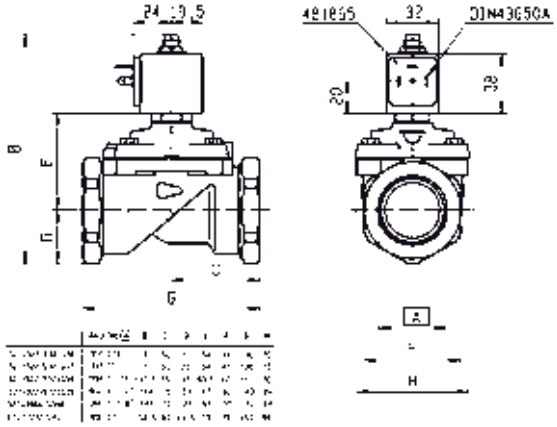

Disegno 3442

2/2 VALVOLE CON SISTEMA ATTENUAZIONE COLPO DI ARIETE
SERVOPILOTATA

OTTONE
MONTAGGIO SU RACCORDI
NORMALMENTE CHIUSA

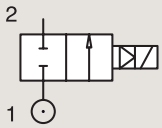

Raccordi	Orifizio Ø	Fattore Portata			Pressione differenziale			Temp. Fluido		Tenuta	Valvola PARKER LUCIFER®			Potenza		Gruppo Elettrico	Disegno nr.
					Min	Mass		Min	Mass		Valvola	Housing	Bobina				
BSP	mm	Kv l/min	KV m³/h	Qn l/min	bar	AC bar	DC bar	°C	°C					AC W	DC W		
1"	18	110	6.6	10150	0.3	12	12	-10	100	FKM	**321K4706**	**2995**	**481865**	8	9	2.1/3.0	7100
	18	110	6.6	10150	0.3	12	12	-10	120	FKM	**321K4706**	**4270**	**481000**	8	8	2.1/3.0	7100
	18	110	6.6	10150	0.3	12	12	-10	100	FKM	**321K4756** [1]	**2995**	**481865**	8	9	2.1/3.0	7100
	18	110	6.6	10150	0.3	12	12	-10	120	FKM	**321K4756** [1]	**4270**	**481000**	8	8	2.1/3.0	7100
	25	180	10.8	14000	0.3	16	16	-10	100	NBR	**E321G3710** [2]	**2995**	**481865**	8	9	2.0	3442
	25	180	10.8	14000	0.3	16	16	-10	100	NBR	**E321G3710** [2]	**4270**	**481000**	8	8	2.0	3442
1 1/4"	28	280	16.8	18000	0.3	16	16	-10	100	NBR	**E321G3810** [2]	**2995**	**481865**	8	9	2.0	3442
	28	280	16.8	18000	0.3	16	16	-10	100	NBR	**E321G3810** [2]	**v4270**	**481000**	8	8	2.0	3442
1 1/2"	40	420	25.2	31500	0.3	16	7	-10	100	NBR	**E321G3910** [2]	**2995**	**481865**	8	9	2.0	3442
	40	420	25.2	31500	0.3	16	8.5	-10	100	NBR	**E321G3910** [2]	**4270**	**481000**	8	8	2.0	3442
2"	40	540	32.4	40000	0.3	16	7	-10	100	NBR	**E321G4010** [2]	**2995**	**481865**	8	9	2.0	3442
	40	540	32.4	40000	0.3	16	8.5	-10	100	NBR	**E321G4010** [2]	**4270**	**481000**	8	8	2.0	3442

Nota:

1. Con comando manuale
2. Con comando manuale e con selezionatore a 4 posizioni per controllo tempo di chiusura - Senza questa opzione : lo stesso suffisso di riferimento PROBLEMI '10', ex. E321G36.

In questa pagina	Raccordi	Orifizio (mm)	Kv (l/min)	Press. Diff. (bar)	Temp. Fluido (°C)	Temp. Amb. (°C)
da	1''	18	110	7	-10	-10
a	2''	40	540	16	120	50

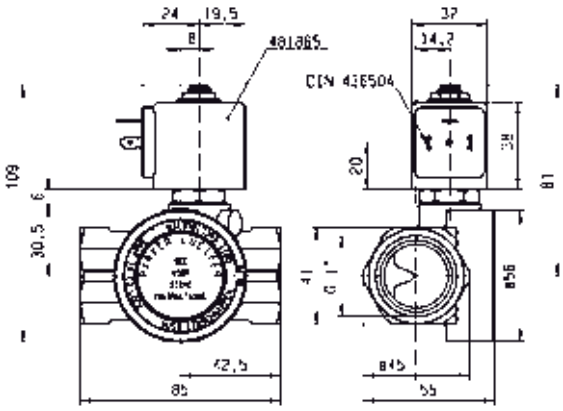

Disegno 7100

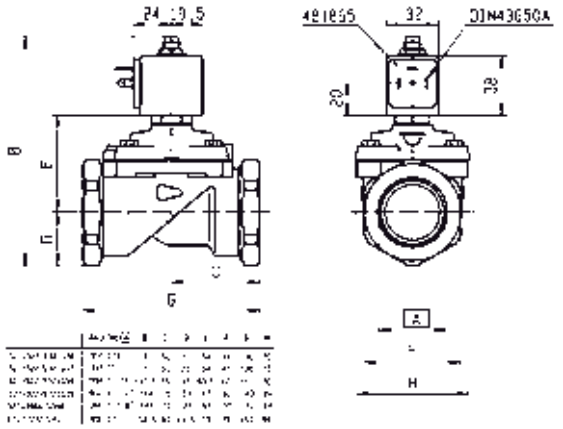

Disegno 3442

2/2 VALVOLE CON SISTEMA ATTENUAZIONE COLPO DI ARIETE
SERVOPILOTATA

OTTONE
MONTAGGIO SU RACCORDI
NORMALMENTE APERTA

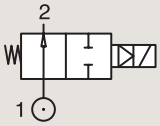

Raccordi	Orifizio Ø	Fattore Portata			Pressione differenziale			Temp. Fluido		Tenuta	Valvola PARKER LUCIFER®			Potenza		Gruppo Elettrico	Disegno nr.
					Min	Mass		Min	Mass		Valvola	Housing	Bobina				
BSP	mm	Kv l/min	KV m³/h	Qn l/min	bar	AC bar	DC bar	°C	°C					AC W	DC W		
3/4"	20	135	8.1	9300	0.3	16	16	-10	100	NBR	322G3610 [1]	2995	481865	8	9	2.1	3442
	20	135	8.1	9300	0.3	16	16	-10	100	NBR	322G3610 [1]	4270	481000	8	8	2.1	3442
1"	25	180	10.8	14000	0.3	16	16	-10	100	NBR	322G3710 [1]	2995	481865	8	9	2.1	3442
	25	180	10.8	14000	0.3	16	16	-10	100	NBR	322G3710 [1]	4270	481000	8	8	2.1	3442
1 1/4"	28	270	16.2	18000	0.3	16	16	-10	100	NBR	322G3810 [1]	2995	481865	8	9	2.1	3442
	28	270	16.2	18000	0.3	16	16	-10	100	NBR	322G3810 [1]	4270	481000	8	8	2.1	3442
1 1/2"	40	425	25.5	31000	0.3	12	12	-10	100	NBR	322G3910 [1]	2995	481865	8	9	2.1	3442
	40	425	25.5	31000	0.3	12	12	-10	100	NBR	322G3910 [1]	4270	481000	8	8	2.1	3442
2"	40	540	32.4	40000	0.3	12	12	-10	100	NBR	322G4010 [1]	2995	481865	8	9	2.1	3442
	40	540	32.4	40000	0.3	12	12	-10	100	NBR	322G4010 [1]	4270	481000	8	8	2.1	3442

Nota:

1. Con selezionatore a 4 posizioni per controllo tempo di chiusura

In questa pagina	Raccordi	Orifizio (mm)	Kv (l/min)	Press. Diff. (bar)	Temp. Fluido (°C)	Temp. Amb. (°C)
da	3/4''	20	135	12	-10	-10
a	2''	40	540	16	100	50

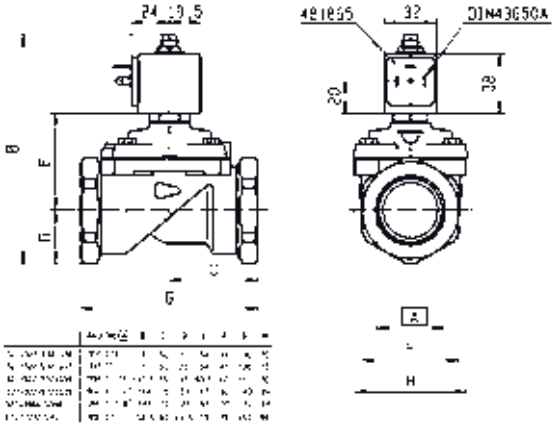

Disegno 3442

VALVOLE PER ACQUA CALDA E VAPORE

2/2

Azionamento	Corpo	Funzione	Raccordi	Orifizio (mm)	Fattore Portata	Pressione Differenziale Mass. (Bar)	Temp. Mass. Fluido	Pagina Elettroval-vola Parker	Pagina Elettrovalvola Parker LUCIFER®
Comando diretto	**Ottone/Raccordi**	**Normalmente chiusa**	1/8''	2.5	3.2	30	140	**126**	**-**
			1/4''	2.5 a 5	11	30	180	**126**	**128**
			3/8''	6	12	5	140	**-**	**128**
			1/2''	8.5 a 11	36	4	120	**-**	**128**
	AISI303/Raccordi	**Normalmente chiusa**	1/4''	1.5 a 5	10	100	180	**-**	**130**
Magnalift	**Ottone/Raccordi**	**Normalmente chiusa**	3/8''	15	65	10	140	**-**	**132**
			1/2''	15	65	10	140	**-**	**132**
			3/4''	15	80	10	140	**-**	**132**
			1''	15	80	10	140	**-**	**132**
Servopilotata	**Ottone/Raccordi**	**Normalmente chiusa**	3/8''	10 a 16	78	16	180	**134**	**-**
			1/2''	10 a 16	78	16	180	**134**	**138**
			3/4''	18 a 27	193	14	180	**136**	**-**
			1''	18 a 27	193	14	180	**136**	**-**

2/2 VALVOLE PER ACQUA CALDA E VAPORE

MAGNALIFT

Impianti Commerciali

Impianti Industriali

Medicale / Strumentazione

OTTONE
MONTAGGIO SU RACCORDI
NORMALMENTE CHIUSA

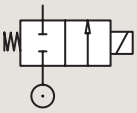

Raccordi	Orifizio Ø	Fattore portata			Pressione differenziale			Temp. Fluido		Tenuta	Valvola PARKER			Potenza		Gruppo Electtrico	Disegno nr.
					Min	Mass		Min	Mass								
BSP	mm	Kv l/min	KV m³/h	Qn m³/h	bar	AC bar	DC bar	°C	°C		Codice di Ordinazione	Modello valvola	Modello bobina	AC W	DC W		
1/8"	2.5	3.2	0.20	-	0	30	-	-30	140	Ruby	362496J	PM140IR	ZB09	9	-	20.1/20.2	027
	2.5	3.2	0.20	-	0	-	17	-30	140	Ruby	362496J	PM140IR	ZB12	-	12	20.1/20.2	027
1/4"	2.5	3.2	0.20	-	0	30	-	-30	140	Ruby	362518J [1]	PM140CR	ZB09	9	-	20.1/20.2	026
	2.5	3.2	0.20	-	0	-	17	-30	140	Ruby	362518J [1]	PM140CR	ZB12	-	12	20.1/20.2	026
	2.5	3.2	0.20	-	0	30	-	-30	140	Ruby	362518J [1]	PM140CR	ZH14	14	-	20.1/20.2	026
	2.5	3.2	0.20	-	0	-	17	-30	140	Ruby	362518J [1]	PM140CR	ZH16	-	16	20.1/20.2	026
	3	4.2	0.25	-	0	10	-	-10	140	EPDM	360470 [2]	PM126YH	ZB09	9	-	20.1/20.2	008
	3	4.2	0.25	-	0	-	6	-10	140	EPDM	360470 [2]	PM126YH	ZB12	-	12	20.1/20.2	008
	3	4.2	0.25	-	0	10	-	-10	140	EPDM	360470 [2]	PM126YH	ZH14	14	-	20.1/20.2	008
	3	4.2	0.25	-	0	-	6	-10	140	EPDM	360470 [2]	PM126YH	ZH16	-	16	20.1/20.2	008
	3	4.2	0.25	-	0	10	-	-10	180	PTFE	360475 [2]	PM126YT	ZH14	14	-	20.1/20.2	008
	3	4.2	0.25	-	0	-	10	-10	180	PTFE	360475 [2]	PM126YT	ZH16	-	16	20.1/20.2	008
	3	4	0.24	-	0	30	-	-30	140	Ruby	362524J	PM140DR	ZB09	9	-	20.1/20.2	026
	3	4	0.24	-	0	-	12	-30	140	Ruby	362524J	PM140DR	ZB12	-	12	20.1/20.2	026
	3	4	0.24	-	0	30	-	-30	140	Ruby	362524J	PM140DR	ZH14	14	-	20.1/20.2	026
	3	4	0.24	-	0	-	12	-30	140	Ruby	362524J	PM140DR	ZH16	-	16	20.1/20.2	026
	3	3.3	0.2	-	0	10	-	-10	140	EPDM	364880J [2]	PM158IH	ZH14	14	-	20.2	042
	3	3.3	0.2	-	0	-	4	-10	140	EPDM	364880J [2]	PM158IH	ZH16	-	16	20.2	042
	3	3.3	0.2	-	0	10	-	-10	180	PTFE	364884J [2]	PM158IT	ZH14	14	-	20.2	042
	3	3.3	0.2	-	0	-	10	-10	180	PTFE	364884J [2]	PM158IT	ZH16	-	16	20.2	042

Nota:

1. Approvato DIN-EN-ISO23553-1(2009-10) per bruciatori
2. Pressione massima vapore: 4 bar (140°C)

In questa pagina	Raccordi	Orifizio (mm)	Kv (l/min)	Press. Diff. (bar)	Temp. Fluido (°C)	Temp. Amb. (°C)
da	1/8''	2.5	3.2	4	-30	-10
a	1/4''	3	4.2	30	180	50

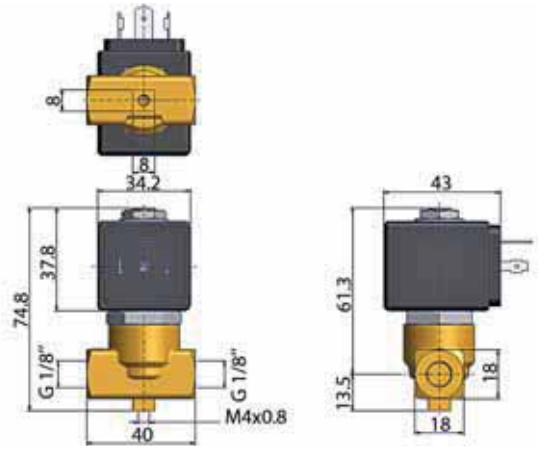

Disegno 027

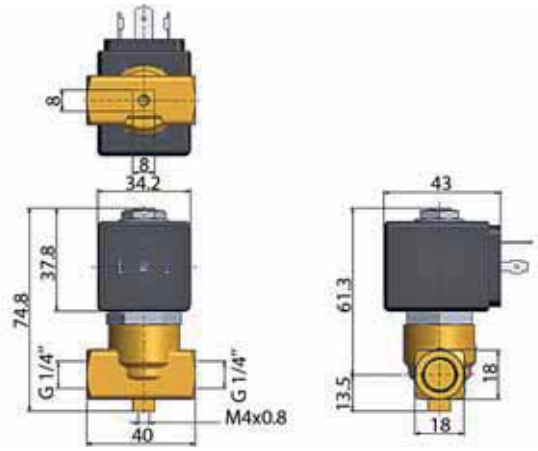

Disegno 026

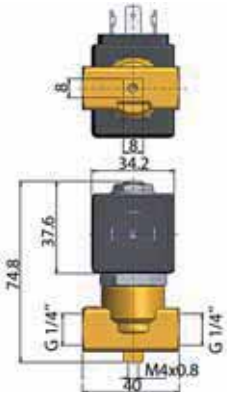

Disegno 008

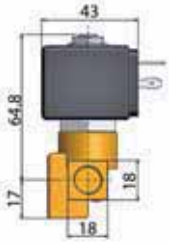

Disegno 042

2/2 VALVOLE PER ACQUA CALDA E VAPORE

COMANDO DIRETTO

OTTONE
MONTAGGIO SU RACCORDI
NORMALMENTE CHIUSA

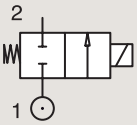

Raccordi	Orifizio Ø	Fattore Portata			Pressione differenziale			Temp. Fluido		Tenuta	Valvola PARKER LUCIFER®			Potenza		Gruppo Elettrico	Disegno nr.
					Min	Mass		Min	Mass		Valvola	Housing	Bobina				
BSP	mm	Kv l/min	KV m³/h	Qn l/min	bar	AC bar	DC bar	°C	°C					AC W	DC W		
1/4"	3	4.5	0.27	-	0	10	7	0	100	EPDM	**121K0323**	**2995**	**481865**	8	9	2.0	3510
	3	4.5	0.27	-	0	10	8.5	-	120	EPDM	**121K0323**	**4270**	**481000**	8	8	2.0	3510
	3	4.5	0.27	-	0	10	10	0	120	EPDM	**121K0323**	**4270**	**486265**	14	14	2.0	3510
	3	4.5	0.27	-	0	10	10	0	120	EPDM	**121K0323**	**2995**	**492425**	14	14	2.0	3510
	5	11	0.66	750	0	7	2	0	100	EPDM	**121K0103**	**2995**	**481865**	8	9	2.0	3510
	5	11	0.66	750	0	7	2.8	0	120	EPDM	**121K0103**	**4270**	**481000**	8	8	2.0	3510
	5	11	0.66	750	0	7	5	0	120	EPDM	**121K0103**	**4270**	**486265**	14	14	2.0	3510
	5	11	0.66	750	0	4	3.5	0	120	EPDM	**121K0103**	**2995**	**492425**	14	14	2.0	3510
	5	11	0.66	750	0	7	2	0	100	FKM	**121K0113**	**2995**	**481865**	8	9	2.0	3510
3/8"	6	12	0.72	1100	0	5	1.1	0	100	EPDM	**121K3303**	**2995**	**481865**	8	9	2.0	3551
	6	12	0.72	1100	0	5	1.5	0	120	EPDM	**121K3303**	**4270**	**481000**	8	8	2.0	3551
	6	12	0.72	1100	0	4	4	0	120	EPDM	**121K3303**	**4270**	**486265**	14	14	2.0	3551
	6	12	0.72	1100	0	4	4	0	140	EPDM	**121K3303**	**2995**	**492425**	14	14	2.0	3551
1/2"	8.5	25	1.5	-	0	2.2	0.5	0	120	EPDM	**E121K4603**	**4270**	**481000**	8	8	2.0	3427
	8.5	25	1.5	-	0	4	1.2	0	120	EPDM	**E121K4603**	**4270**	**486265**	14	14	2.0	3427
	8.5	25	1.5	-	0	4	1	0	120	EPDM	**E121K4603**	**2995**	**492425**	14	14	2.0	3427
	11	36	2.16	-	0	1.2	0.35	0	120	EPDM	**E121K4503**	**4270**	**481000**	8	8	2.0	3427
	11	36	2.16	-	0	2.5	0.7	0	120	EPDM	**E121K4503**	**4270**	**486265**	14	14	2.0	3427
	11	36	2.16	-	0	2.5	0.5	0	120	EPDM	**E121K4503**	**2995**	**492425**	14	14	2.0	3427

In questa pagina	Raccordi	Orifizio (mm)	Kv (l/min)	Press. Diff. (bar)	Temp. Fluido (°C)	Temp. Amb. (°C)
da	1/4"	3	4.5	0.4	0	-10
a	1/2"	11	36	10	140	50

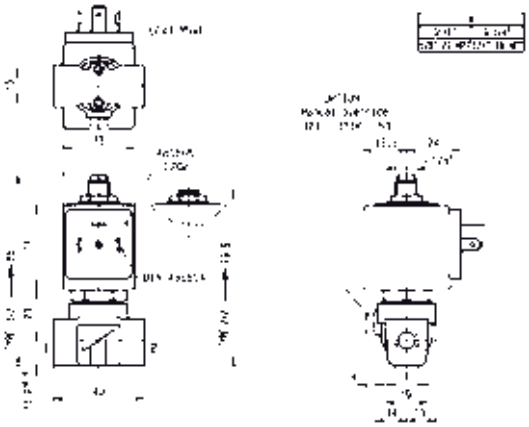

Disegno 3510

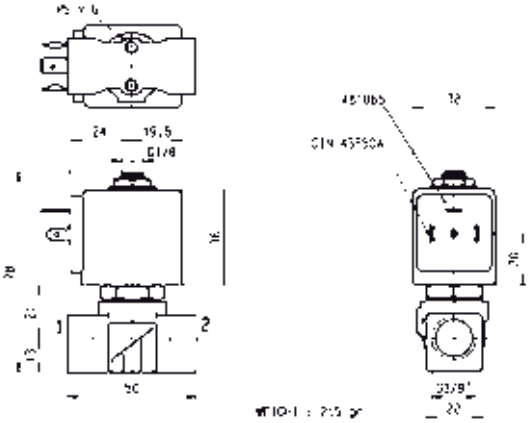

Disegno 3551

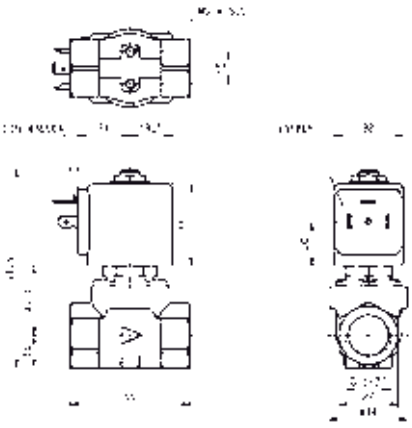

Disegno 3427

2/2 VALVOLE PER ACQUA CALDA E VAPORE

COMANDO DIRETTO

AISI 303

MONTAGGIO SU RACCORDI

NORMALMENTE CHIUSA

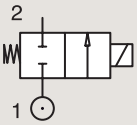

Raccordi	Orifizio Ø	Fattore Portata			Pressione differenziale			Temp. Fluido		Tenuta	Valvola PARKER LUCIFER®			Potenza		Gruppo Elettrico	Disegno nr.
					Min	Mass		Min	Mass		Valvola	Housing	Bobina				
BSP	mm	Kv l/min	KV m³/h	Qn l/min	bar	AC bar	DC bar	°C	°C					AC W	DC W		
1/4"	1.5	1.5	0.09	80	0	60	25	0	100	Ruby	**121V5463**	**2995**	**481865**	8	9	2.0	8116
	1.5	1.5	0.09	80	0	75	30	0	130	Ruby	**121V5463**	**4270**	**481000**	8	8	2.0	8116
	1.5	1.5	0.09	80	0	100	55	0	140	Ruby	**121V5463**	**4270**	**486265**	14	14	2.0	8116
	2.5	3.5	0.21	220	0	28	10	0	100	Ruby	**121V5763**	**2995**	**481865**	8	9	2.0	8116
	2.5	3.5	0.21	220	0	34	12	0	130	Ruby	**121V5763**	**4270**	**481000**	8	8	2.0	8116
	2.5	3.5	0.21	220	0	50	22	0	140	Ruby	**121V5763**	**4270**	**486265**	14	14	2.0	8116
	3	4.5	0.27	315	0	20	7	0	100	Ruby	**121V5363**	**2995**	**481865**	8	9	2.0	8116
	3	4.5	0.27	315	0	25	8.5	0	130	Ruby	**121V5363**	**4270**	**481000**	8	8	2.0	8116
	3	4.5	0.27	315	0	36	15	0	140	Ruby	**121V5363**	**4270**	**486265**	14	14	2.0	8116
	4	7	0.42	450	0	12	4	0	100	Ruby	**121V5263**	**2995**	**481865**	8	9	2.0	8116
	4	7	0.42	450	0	15	5	0	130	Ruby	**121V5263**	**4270**	**481000**	8	8	2.0	8116
	4	7	0.42	450	0	22	10	0	180	Ruby	**121V5263**	**4270**	**486265**	14	14	2.0	8116
	5	10	0.6	750	0	8.5	2	0	100	Ruby	**121V5163**	**2995**	**481865**	8	9	2.0	8116
	5	10	0.6	750	0	10	3.5	0	130	Ruby	**121V5163**	**4270**	**481000**	8	8	2.0	8116
	5	10	0.6	750	0	14	6.5	0	140	Ruby	**121V5163**	**4270**	**486265**	14	14	2.0	8116

In questa pagina	Raccordi	Orifizio (mm)	Kv (l/min)	Press. Diff. (bar)	Temp. Fluido (°C)	Temp. Amb. (°C)
da	1/4''	1.5	1.5	2	0	-10
a	1/4''	5	10	100	180	50

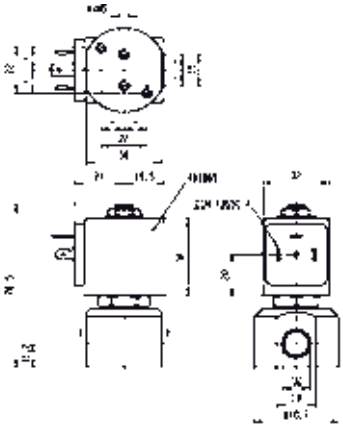

Disegno 8116

2/2 VALVOLE PER ACQUA CALDA E VAPORE

MAGNALIFT

Impianti Commerciali

Impianti Industriali

Medicale / Strumentazione

OTTONE
MONTAGGIO SU RACCORDI
NORMALMENTE CHIUSA

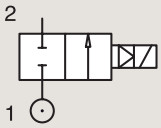

Raccordi	Orifizio Ø	Fattore Portata			Pressione differenziale			Temp. Fluido		Tenuta	Valvola PARKER LUCIFER®			Potenza		Gruppo Elettrico	Disegno nr.
					Min	Mass		Min	Mass		Valvola	Housing	Bobina				
BSP	mm	Kv l/min	KV m³/h	Qn l/min	bar	AC bar	DC bar	°C	°C					AC W	DC W		
3/8"	15	65	3.9	-	0	10	-	0	100	EPDM	**221G1303**	**2995**	**481865**	8	-	2.0	3732
	15	65	3.9	-	0	10	-	0	120	EPDM	**221G1303**	**4270**	**481000**	8	-	2.0	3732
	15	65	3.9	-	0	4	4	0	140	EPDM	**221G1303**	**4270**	**486265**	14	14	2.0	3732
	15	65	3.9	4500	0	10	10	-10	100	FKM	**221G1330** [1]	**2995**	**481865**	8	9	2.1	3732
	15	65	3.9	4500	0	10	10	-10	120	FKM	**221G1330** [1]	**-**	**492070**	9	8	2.1	3732
	15	65	3.9	4500	0	10	10	-10	120	FKM	**221G1330** [1]	**-**	**492190**	11	9	2.1	3732
1/2"	15	65	3.9	-	0	10	-	0	100	EPDM	**221G1503**	**2995**	**481865**	8	-	2.0	3732
	15	65	3.9	-	0	10	-	0	120	EPDM	**221G1503**	**4270**	**481000**	8	-	2.0	3732
	15	65	3.9	-	0	10	7	0	140	EPDM	**221G1503**	**4270**	**486265**	14	14	2.0	3732
3/4"	15	80	4.8	-	0	10	-	0	100	EPDM	**221G1603**	**2995**	**481865**	8	-	2.0	3444
	15	80	4.8	-	0	10	-	0	120	EPDM	**221G1603**	**4270**	**481000**	8	-	2.0	3444
	15	80	4.8	-	0	4	4	0	140	EPDM	**221G1603**	**4270**	**486265**	14	14	2.0	3444
1"	15	80	4.8	-	0	10	-	0	100	EPDM	**221G1703**	**2995**	**481865**	8	-	2.0	3445
	15	80	4.8	-	0	10	-	0	120	EPDM	**221G1703**	**4270**	**481000**	8	-	2.0	3445
	15	80	4.8	-	0	10	10	0	140	EPDM	**221G1703**	**4270**	**486265**	14	14	2.0	3445

Nota:

1. Valvole con la cui designazione termina con 30 o 31 sono compatibile con le parti elettriche elencate o con le bobine del gruppo 2.1 in tensione DC

In questa pagina	Raccordi	Orifizio (mm)	Kv (l/min)	Press. Diff. (bar)	Temp. Fluido (°C)	Temp. Amb. (°C)
da	3/8"	15	65	4	-10	-10
a	1"	15	80	10	140	50

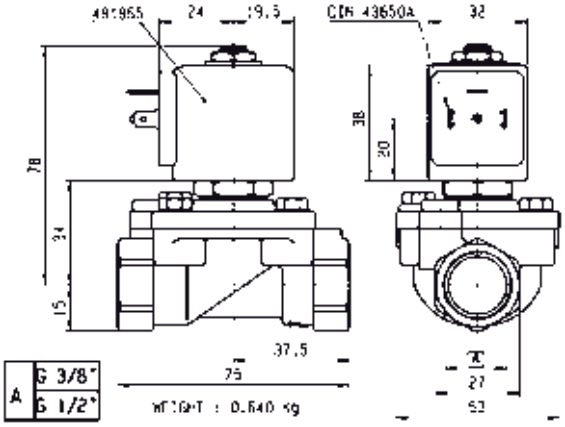

Disegno 3732

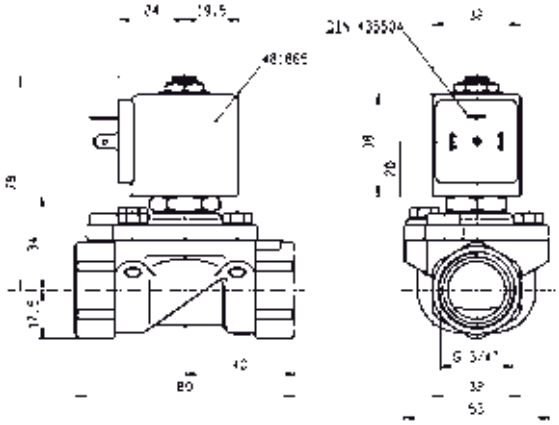

Disegno 3444

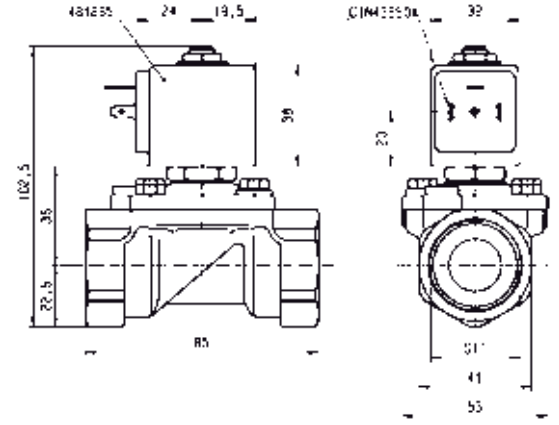

Disegno 3445

2/2 VALVOLE PER ACQUA CALDA E VAPORE

SERVOPILOTATA

Impianti Commerciali

Impianti Industriali

Medicale / Strumentazione

OTTONE
MONTAGGIO SU RACCORDI
NORMALMENTE CHIUSA

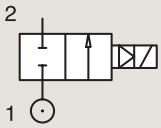

Raccordi	Orifizio Ø	Fattore portata			Pressione differenziale			Temp. Fluido		Tenuta	Valvola PARKER			Potenza		Gruppo Electtrico	Disegno nr.
					Min	Mass		Min	Mass								
BSP	mm	Kv l/min	KV m^3/h	Qn m^3/h	bar	AC bar	DC bar	°C	°C		Codice di Ordinazione	Modello valvola	Modello bobina	AC W	DC W		
3/8"	10	22	1.32	-	0.5	16	-	-30	160	PTFE	364520 [1]	PM156.2IR	ZB09	9	-	20.1	041
	16	78	4.7	-	0.5	10	-	-30	180	PTFE	362262	PM135IT	ZH14	14	-	20.1/20.2	017
	16	78	4.7	-	0.5	-	10	-30	180	PTFE	362262	PM135IT	ZH16	-	16	20.1/20.2	017
1/2"	16	78	4.7	-	0.5	10	-	-30	180	PTFE	362263	PM135AT	ZH14	14	-	20.1/20.2	016
	16	78	4.7	-	0.5	-	10	-30	180	PTFE	362263	PM135AT	ZH16	-	16	20.1/20.2	016

Nota:

1. Pressione massima vapore: 6,5 bar (160°C)

In questa pagina	Raccordi	Orifizio (mm)	Kv (l/min)	Press. Diff. (bar)	Temp. Fluido (°C)	Temp. Amb. (°C)
da	3/8''	10	22	10	-30	-10
a	1/2''	16	78	16	180	50

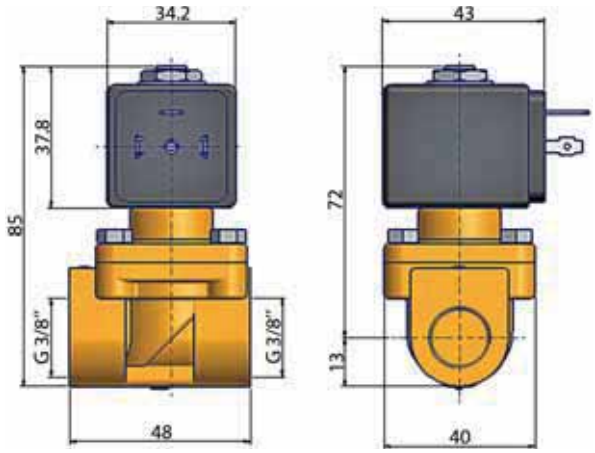

Disegno 041

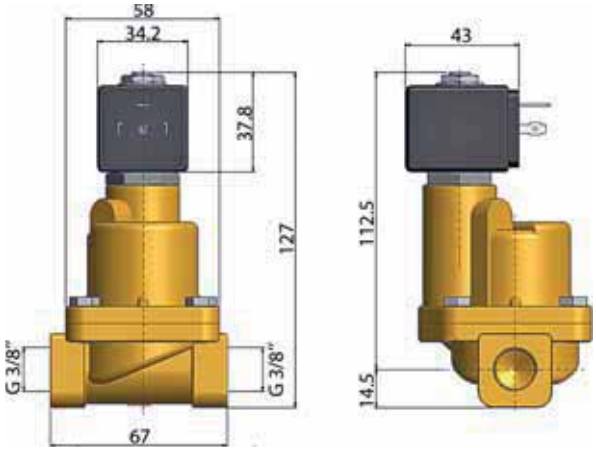

Disegno 017

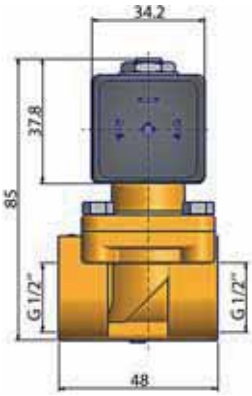

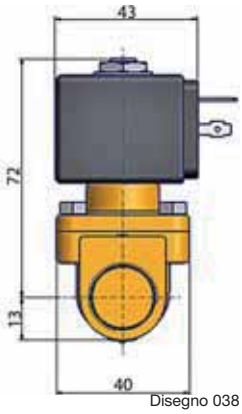

Disegno 038

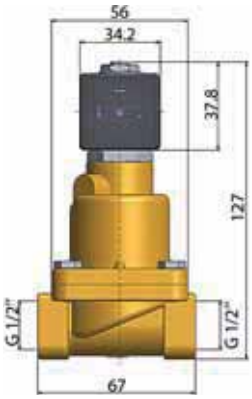

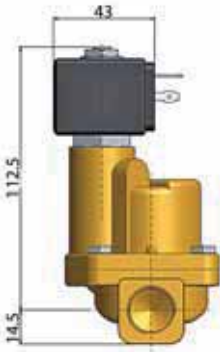

Disegno 016

2/2 VALVOLE PER ACQUA CALDA E VAPORE

SERVOPILOTATA

OTTONE
MONTAGGIO SU RACCORDI
NORMALMENTE CHIUSA

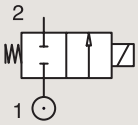

Raccordi	Orifizio Ø	Fattore portata			Pressione differenziale			Temp. Fluido		Tenuta	Valvola PARKER			Potenza		Gruppo Electtrico	Disegno nr.
					Min	Mass		Min	Mass								
BSP	mm	Kv l/min	KV m³/h	Qn m³/h	bar	AC bar	DC bar	°C	°C		Codice di Ordinazione	Modello valvola	Modello bobina	AC W	DC W		
3/4"	18	37	2.22	-	0.5	14	-	-30	160	PTFE	**364530** [1]	**PM156.2CR**	**ZB09**	9	-	20.1	039
	27	193	11.6	-	0.5	10	-	-30	180	PTFE	**362264**	**PM135CT**	**ZH14**	14	-	20.2	018
	27	193	11.6	-	0.5	-	10	-30	180	PTFE	**362264**	**PM135CT**	**ZH16**	-	16	20.2	018
1"	18	42	2.52	-	0.5	14	-	-30	160	PTFE	**364535** [1]	**PM156.2DR**	**ZB09**	9	-	20.1	040
	27	193	11.6	-	0.5	10	-	-30	180	PTFE	**362265**	**PM135DT**	**ZH14**	14	-	20.2	019
	27	193	11.6	-	0.5	-	10	-30	180	PTFE	**362265**	**PM135DT**	**ZH16**	-	16	20.2	019

Nota:

1. Pressione massima vapore: 6,5 bar (160°C)

In questa pagina	Raccordi	Orifizio (mm)	Kv (l/min)	Press. Diff. (bar)	Temp. Fluido (°C)	Temp. Amb. (°C)
da	3/4''	18	37	10	-30	-10
a	1''	27	193	14	180	50

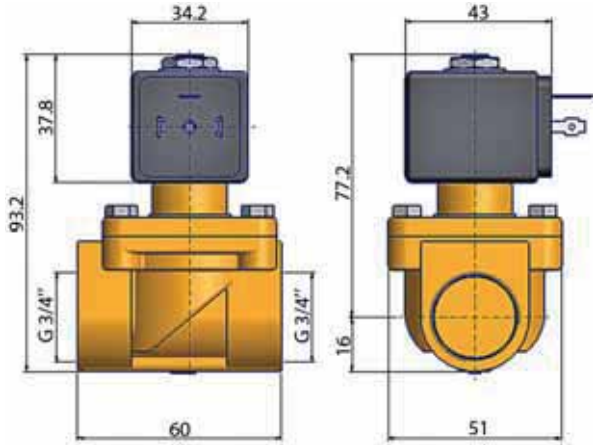

Disegno 039

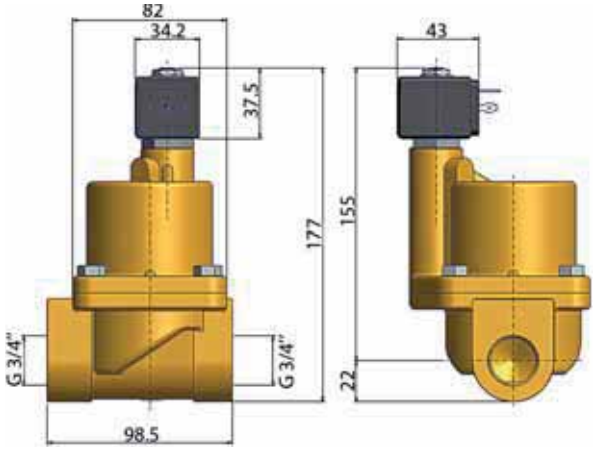

Disegno 018

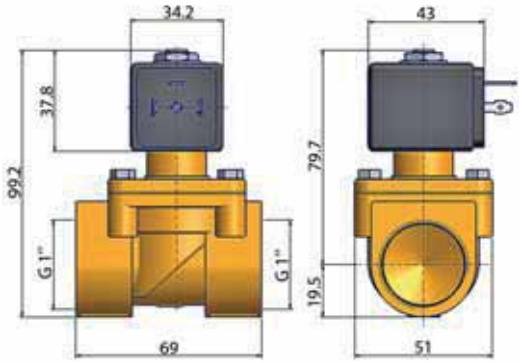

Disegno 040

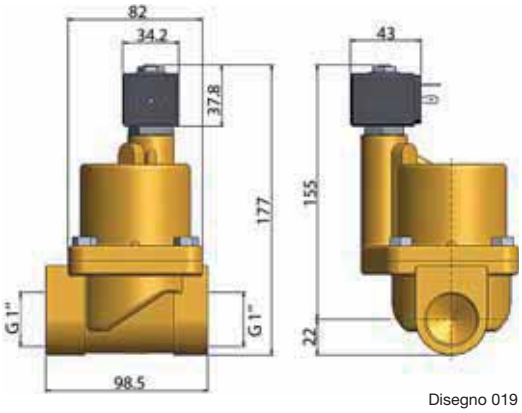

Disegno 019

2/2 VALVOLE PER ACQUA CALDA E VAPORE

SERVOPILOTATA

OTTONE
MONTAGGIO SU RACCORDI
NORMALMENTE CHIUSA

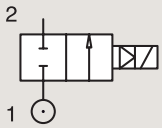

Raccordi	Orifizio Ø	Fattore Portata			Pressione differenziale			Temp. Fluido		Tenuta	Valvola PARKER LUCIFER®			Potenza		Gruppo Elettrico	Disegno nr.
					Min	Mass		Min	Mass		Valvola	Housing	Bobina				
BSP	mm	Kv l/min	KV m³/h	Qn l/min	bar	AC bar	DC bar	°C	°C					AC W	DC W		
1/2"	11	36	2.16	-	0.2	10	4	0	120	EPDM	**E321K1503**	**4270**	**481000**	8	8	2.0	3427
	11	36	2.16	-	0.2	10	-	0	100	EPDM	**E321K1503**	**4270**	**483520**	9	-	2.0	3427
	11	36	2.16	-	0.2	10	-	0	120	EPDM	**E321K1503**	**4270**	**486992**	10	-	2.0	3427

In questa pagina	Raccordi	Orifizio (mm)	Kv (l/min)	Press. Diff. (bar)	Temp. Fluido (°C)	Temp. Amb. (°C)
da	1/2''	11	36	4	0	-10
a	1/2''	11	36	10	120	50

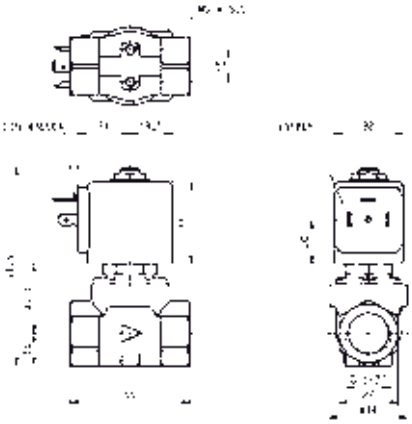

Disegno 3427

VALVOLE PER OLIO IDRAULICO E LIQUIDI NEUTRI (MAX.100 BAR)

2/2

Azionamento	Corpo	Funzione	Raccordi	Orifizio (mm)	Fattore Portata	Pressione Differenziale Mass. (Bar)	Temp. Mass. Fluido	Pagina Elettrovalvola Parker	Pagina Elettrovalvola Parker LUCIFER®
Comando diretto	Ottone/Raccordi	Normalmente chiusa	1/8''	1.5 a 2.5	3.5	70	130	-	142
			1/4''	0.8 a 3	4.5	100	140	-	142
			3/8''	4 a 6	12	10	120	-	144
		Normalmente aperta	1/8''	2.5	3.5	30	140	-	144
			1/4''	1.5 a 2.5	3.5	40	140	-	144
	Ottone/Sottobase	Normalmente chiusa	5 mm	1.5 a 3	4.5	100	130	-	146
Servopilotata	Ottone/Raccordi	Normalmente chiusa	1/4''	8	36	40	140	-	148
			3/8''	11	50	40	140	-	148
			1/2''	15	60	40	140	-	150
		Normalmente aperta	1/4''	8	36	40	140	-	152
			3/8''	11	50	40	140	-	152
			1/2''	15	60	40	140	-	152
	Ottone/Sottobase	Normalmente chiusa	14 mm	14	45	40	140	-	154
		Normalmente aperta	14 mm	14	45	40	120	-	154

2/2 VALVOLE PER OLIO IDRAULICO E LIQUIDI NEUTRI (MAX.100 BAR)

COMANDO DIRETTO

Impianti Industriali

Impianti Commerciali

Sistemi di Riscaldamento

OTTONE
MONTAGGIO SU RACCORDI
NORMALMENTE CHIUSA

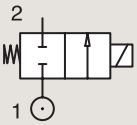

Raccordi	Orifizio Ø	Fattore Portata			Pressione differenziale			Temp. Fluido		Tenuta	Valvola PARKER LUCIFER®			Potenza		Gruppo Elettrico	Disegno nr.
					Min	Mass		Min	Mass		Valvola	Housing	Bobina				
BSP	mm	Kv l/min	KV m³/h	Qn l/min	bar	AC bar	DC bar	°C	°C					AC W	DC W		
1/8"	1.5	1.5	0.09	80	0	60	25	-30	75	PCTFE	**E121K14**	**2995**	**481865**	8	9	2.0	3510
	1.5	1.5	0.09	80	0	70	30	-30	75	PCTFE	**E121K14**	**4270**	**481000**	8	8	2.0	3510
	1.5	1.5	0.09	80	0	70	55	-30	75	PCTFE	**E121K14**	**4270**	**486265**	14	14	2.0	3510
	2.5	3.5	0.21	220	0	28	10	-30	100	Ruby	**E121K23**	**2995**	**481865**	8	9	2.0	3510
	2.5	3.5	0.21	220	0	34	12	-30	130	Ruby	**E121K23**	**4270**	**481000**	8	8	2.0	3510
	2.5	3.5	0.21	220	0	50	22	-30	120	Ruby	**E121K23**	**4270**	**486265**	14	14	2.0	3510
	1.2	0.85	0.05	50	0	80	36	-30	100	Ruby	**E121K65**	**2995**	**481865**	8	9	2.0	3510
	1.2	0.85	0.05	50	0	100	43	-30	130	Ruby	**E121K65**	**4270**	**481000**	8	8	2.0	3510
	1.2	0.85	0.05	50	0	100	75	-30	120	Ruby	**E121K65**	**4270**	**486265**	14	14	2.0	3510
	1.5	1.5	0.09	80	0	60	25	-30	75	PCTFE	**E121K04**	**2995**	**481865**	8	9	2.0	3510
	1.5	1.5	0.09	80	0	70	30	-30	75	PCTFE	**E121K04**	**4270**	**481000**	8	8	2.0	3510
	1.5	1.5	0.09	80	0	70	55	-30	75	PCTFE	**E121K04**	**4270**	**486265**	14	14	2.0	3510
	1.5	1.5	0.09	80	0	60	25	-30	100	Ruby	**E121K67**	**2995**	**481865**	8	9	2.0	3510
	1.5	1.5	0.09	80	0	75	30	-30	130	Ruby	**E121K67**	**4270**	**481000**	8	8	2.0	3510
	1.5	1.5	0.09	80	0	100	55	-30	120	Ruby	**E121K67**	**4270**	**486265**	14	14	2.0	3510
	2.5	3.5	0.21	220	0	28	10	-30	100	Ruby	**E121K63**	**2995**	**481865**	8	9	2.0	3510
	2.5	3.5	0.21	220	0	34	12	-30	130	Ruby	**E121K63**	**4270**	**481000**	8	8	2.0	3510
	2.5	3.5	0.21	220	0	50	22	-30	120	Ruby	**E121K63**	**4270**	**486265**	14	14	2.0	3510
	3	4.5	0.27	320	0	20	7	-30	75	PCTFE	**E121K03**	**2995**	**481865**	8	9	2.0/3.0	3510
	3	4.5	0.27	320	0	25	8.5	-30	75	PCTFE	**E121K03**	**4270**	**481000**	8	8	2.0/3.0	3510

In questa pagina	Raccordi	Orifizio (mm)	Kv (l/min)	Press. Diff. (bar)	Temp. Fluido (°C)	Temp. Amb. (°C)
da	1/8''	1.2	0.85	7	-30	-10
a	1/4''	3	4.5	100	130	50

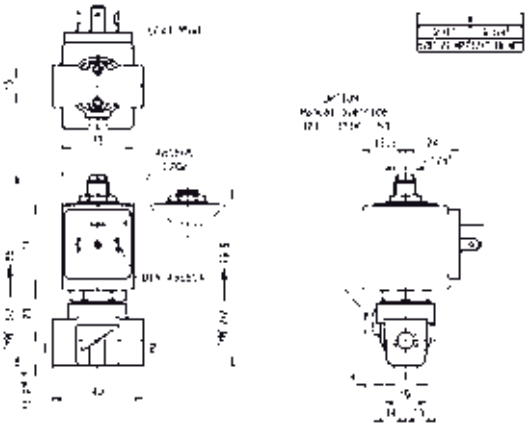

Disegno 3510

2/2 VALVOLE PER OLIO IDRAULICO E LIQUIDI NEUTRI (MAX.100 BAR)

COMANDO DIRETTO

OTTONE
MONTAGGIO SU RACCORDI
NORMALMENTE CHIUSA

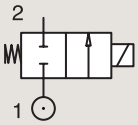

Raccordi	Orifizio Ø	Fattore Portata			Pressione differenziale			Temp. Fluido		Tenuta	Valvola PARKER LUCIFER®			Potenza		Gruppo Elettrico	Disegno nr.
					Min	Mass		Min	Mass		Valvola	Housing	Bobina				
BSP	mm	Kv l/min	KV m³/h	Qn l/min	bar	AC bar	DC bar	°C	°C					AC W	DC W		
1/4"	3	4.5	0.27	320	0	36	15	-30	75	PCTFE	**E121K03**	**4270**	**486265**	14	14	2.0/3.0	3510
	3	4.5	0.27	320	0	20	7	-30	100	Ruby	**E121K64**	**2995**	**481865**	8	9	2.0	3510
	3	4.5	0.27	320	0	25	8.5	-30	130	Ruby	**E121K64**	**4270**	**481000**	8	8	2.0	3510
	3	4.5	0.27	320	0	36	15	-30	120	Ruby	**E121K64**	**4270**	**486265**	14	14	2.0	3510
3/8"	4	7.5	0.45	480	0	10	4	-10	100	FKM	**121K3206**	**2995**	**481865**	8	9	2.0	3551
	4	7.5	0.45	480	0	10	5	-10	120	FKM	**121K3206**	**4270**	**481000**	8	8	2.0	3551
	4	7.5	0.45	480	0	10	10	-10	120	FKM	**121K3206**	**4270**	**486265**	14	14	2.0	3551
	5	11	0.66	750	0	7	2	-10	100	FKM	**121K3106**	**2995**	**481865**	8	9	2.0	3551
	5	11	0.66	750	0	7	2.8	-10	120	FKM	**121K3106**	**4270**	**481000**	8	8	2.0	3551
	5	11	0.66	750	0	7	5	-10	120	FKM	**121K3106**	**4270**	**486265**	14	14	2.0	3551
	6	12	0.72	1100	0	5	1.1	-10	100	FKM	**121K3306**	**2995**	**481865**	8	9	2.0/14.2	3551
	6	12	0.72	1100	0	5	1.5	-10	120	FKM	**121K3306**	**4270**	**481000**	8	8	2.0/14.2	3551
	6	12	0.72	1100	0	5	3	-10	120	FKM	**121K3306**	**4270**	**486265**	14	14	2.0/14.2	3551

OTTONE
MONTAGGIO SU RACCORDI
NORMALMENTE APERTA

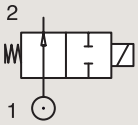

Raccordi	Orifizio Ø	Fattore Portata			Pressione differenziale			Temp. Fluido		Tenuta	Valvola PARKER LUCIFER®			Potenza		Gruppo Elettrico	Disegno nr.
					Min	Mass		Min	Mass		Valvola	Housing	Bobina				
BSP	mm	Kv l/min	KV m³/h	Qn l/min	bar	AC bar	DC bar	°C	°C					AC W	DC W		
1/8"	2.5	3.5	0.21	-	0	30	-	-30	140	Ruby	**122K9363**	**4270**	**481044**	14	-	2.2	3510
	2.5	3.5	0.21	-	0	30	30	-30	140	Ruby	**122K9363**	**4270**	**486265**	14	14	2.2	3510
1/4"	1.5	1.5	0.09	9.6	0	30	30	-10	100	PCTFE	**122K84**	**2995**	**481865**	8	9	2.0	3510
	1.5	1.5	0.09	9.6	0	30	30	-10	100	PCTFE	**122K84**	**4270**	**481000**	8	8	2.0	3510
	1.5	1.5	0.09	9.6	0	30	30	-10	120	PCTFE	**122K84**	**4270**	**486265**	14	14	2.0	3510
	1.5	1.5	0.09	80	0	40	40	-30	100	Ruby	**122K8408**	**2995**	**481865**	8	9	2.1	3510
	1.5	1.5	0.09	80	0	40	40	-30	130	Ruby	**122K8408**	**4270**	**481000**	8	8	2.1	3510
	1.5	1.5	0.09	80	0	40	40	-30	130	Ruby	**122K8408**	**4270**	**486265**	14	14	2.0	3510
	2.5	3.5	0.21	-	0	30	-	-30	140	Ruby	**122K8363**	**4270**	**481044**	14	-	2.2	3510
	2.5	3.5	0.21	-	0	30	30	-30	140	Ruby	**122K8363**	**4270**	**486265**	14	14	2.2	3510

In questa pagina	Raccordi	Orifizio (mm)	Kv (l/min)	Press. Diff. (bar)	Temp. Fluido (°C)	Temp. Amb. (°C)
da	1/8''	1.5	1.5	1.1	-30	-10
a	3/8''	6	12	40	140	50

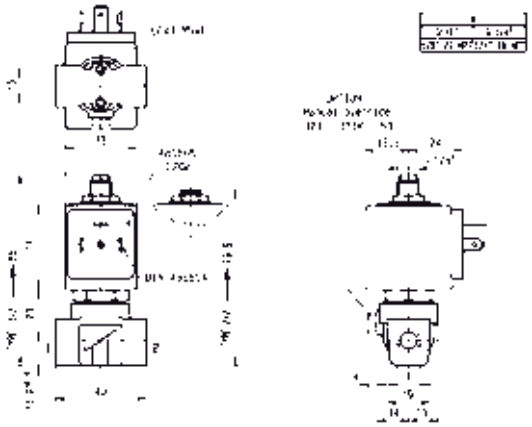

Disegno 3510

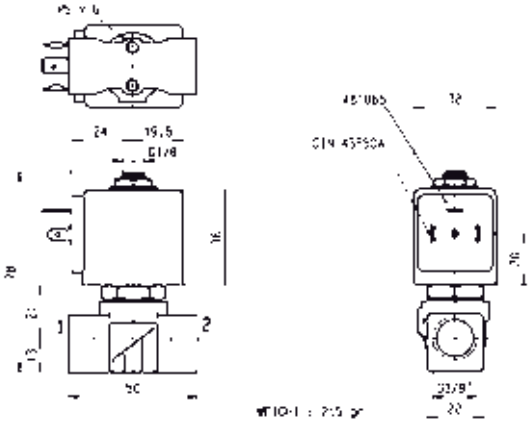

Disegno 3551

2/2 VALVOLE PER OLIO IDRAULICO E LIQUIDI NEUTRI (MAX.100 BAR)

COMANDO DIRETTO

OTTONE
MONTAGGIO SOTTOBASE
NORMALMENTE CHIUSA

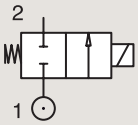

Raccordi	Orifizio Ø	Fattore Portata			Pressione differenziale			Temp. Fluido		Tenuta	Valvola PARKER LUCIFER®			Potenza		Gruppo Elettrico	Disegno nr.
					Min	Mass		Min	Mass		Valvola	Housing	Bobina				
	mm	Kv l/min	KV m³/h	Qn l/min	bar	AC bar	DC bar	°C	°C					AC W	DC W		
SB	1.5	1.5	0.09	80	0	60	25	-30	100	Ruby	**121F67**	**2995**	**481865**	8	9	2.0	3509
	1.5	1.5	0.09	80	0	75	30	-30	130	Ruby	**121F67**	**4270**	**481000**	8	8	2.0	3509
	1.5	1.5	0.09	80	0	100	55	-30	120	Ruby	**121F67**	**4270**	**486265**	14	14	2.0	3509
	1.5	1.5	0.09	80	0	60	25	-30	75	PCTFE	**E121F44**	**2995**	**481865**	8	9	2.0	3509
	1.5	1.5	0.09	80	0	70	30	-30	75	PCTFE	**E121F44**	**4270**	**481000**	8	8	2.0	3509
	1.5	1.5	0.09	80	0	70	55	-30	75	PCTFE	**E121F44**	**4270**	**486265**	14	14	2.0	3509
	2.5	3.5	0.21	220	0	14	7	-10	100	FKM	**121F4706**	**2995**	**481865**	8	9	2.0	3509
	2.5	3.5	0.21	220	0	14	9	-10	120	FKM	**121F4706**	**4270**	**481000**	8	8	2.0	3509
	2.5	3.5	0.21	220	0	14	14	-10	120	FKM	**121F4706**	**4270**	**486265**	14	14	2.0	3509
	2.5	3.5	0.21	220	0	28	10	-30	100	Ruby	**121F63**	**2995**	**481865**	8	9	2.0	3509
	2.5	3.5	0.21	220	0	34	12	-30	130	Ruby	**121F63**	**4270**	**481000**	8	8	2.0	3509
	2.5	3.5	0.21	220	0	50	22	-30	120	Ruby	**121F63**	**4270**	**486265**	14	14	2.0	3509
	3	4.5	0.27	320	0	20	7	-30	100	Ruby	**121F64**	**2995**	**481865**	8	9	2.0	3509
	3	4.5	0.27	320	0	25	8.5	-30	130	Ruby	**121F64**	**4270**	**481000**	8	8	2.0	3509
	3	4.5	0.27	320	0	36	15	-30	120	Ruby	**121F64**	**4270**	**486265**	14	14	2.0	3509
	3	4.5	0.27	320	0	20	7	-30	75	PCTFE	**E121F43**	**2995**	**481865**	8	9	2.0	3509
	3	4.5	0.27	320	0	25	8.5	-30	75	PCTFE	**E121F43**	**4270**	**481000**	8	8	2.0	3509
	3	4.5	0.27	320	0	36	15	-30	75	PCTFE	**E121F43**	**4270**	**486265**	14	14	2.0	3509

In questa pagina	Raccordi	Orifizio (mm)	Kv (l/min)	Press. Diff. (bar)	Temp. Fluido (°C)	Temp. Amb. (°C)
da	5 mm	1.5	1.5	7	-30	-10
a	5 mm	3	4.5	100	130	50

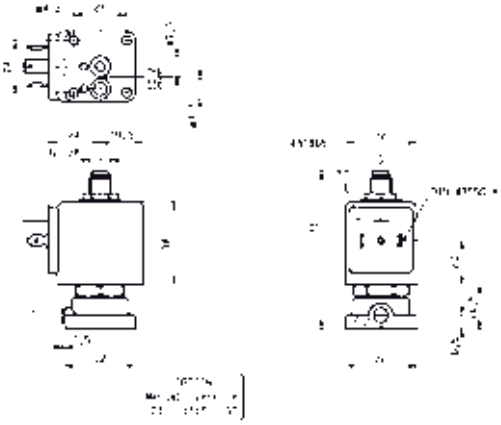

Disegno 3509

2/2 VALVOLE PER OLIO IDRAULICO E LIQUIDI NEUTRI (MAX.100 BAR)

SERVOPILOTATA

Impianti Commerciali

Impianti Industriali

Sistemi di Riscaldamento

OTTONE
MONTAGGIO SU RACCORDI
NORMALMENTE CHIUSA

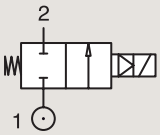

Raccordi	Orifizio Ø	Fattore Portata			Pressione differenziale			Temp. Fluido		Tenuta	Valvola PARKER LUCIFER®			Potenza		Gruppo Elettrico	Disegno nr.
					Min	Mass		Min	Mass		Valvola	Housing	Bobina				
BSP	mm	Kv l/min	KV m³/h	Qn l/min	bar	AC bar	DC bar	°C	°C					AC W	DC W		
1/4"	8	36	2.16	1600	0.3	40	25	-10	100	NBR	E321H11 12	2995	481865	8	9	2.0	3523
	8	36	2.16	1600	0.3	40	30	-10	100	NBR	E321H11 12	4270	481000	8	8	2.0	3523
	8	36	2.16	1600	0.3	40	40	-10	100	NBR	E321H11 12	4270	486265	14	14	2.0	3523
	8	36	2.16	-	0.3	40	25	-10	100	FKM	E321H21 12	2995	481865	8	9	2.0	3523
	8	36	2.16	-	0.3	40	30	-10	120	FKM	E321H21 12	4270	481000	8	8	2.0	3523
	8	36	2.16	-	0.3	40	40	-10	140	FKM	E321H21 12	4270	486265	14	14	2.0	3523
3/8"	11	50	3	2800	0.3	40	25	-10	100	NBR	E321H13 12	2995	481865	8	9	2.0	3521
	11	50	3	2800	0.3	40	30	-10	100	NBR	E321H13 12	4270	481000	8	8	2.0	3521
	11	50	3	2800	0.3	40	40	-10	100	NBR	E321H13 12	4270	486265	14	14	2.0	3521
	11	50	3	-	0.3	40	25	-10	100	FKM	E321H23 12	2995	481865	8	9	2.0	3521
	11	50	3	-	0.3	40	30	-10	120	FKM	E321H23 12	4270	481000	8	8	2.0	3521
	11	50	3	-	0.3	40	40	-10	140	FKM	E321H23 12	4270	486265	14	14	2.0	3521
	11	36	2.16	-	0.2	20	3	-10	100	Ruby	E321K63	2995	483510	9	-	2.0	3429
	11	36	2.16	-	0.2	30	4	-10	140	Ruby	E321K63	4270	488553	9	-	2.0	3429
	11	36	2.16	-	0.2	30	4	-10	120	Ruby	E321K63	-	492190	11	9	2.0	3429

Nota:

1. Pilota con tenuta in Rubino sintetico
2. Pressione differenziale minima = 0,3 bar apertura e 0 bar chiusura

In questa pagina	Raccordi	Orifizio (mm)	Kv (l/min)	Press. Diff. (bar)	Temp. Fluido (°C)	Temp. Amb. (°C)
da	1/4"	8	36	3	-10	-10
a	3/8"	11	50	40	140	50

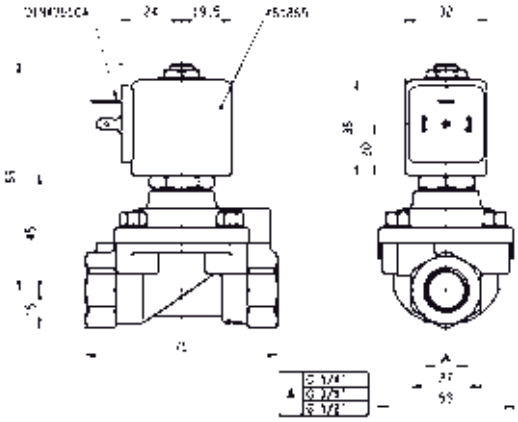

Disegno 3523

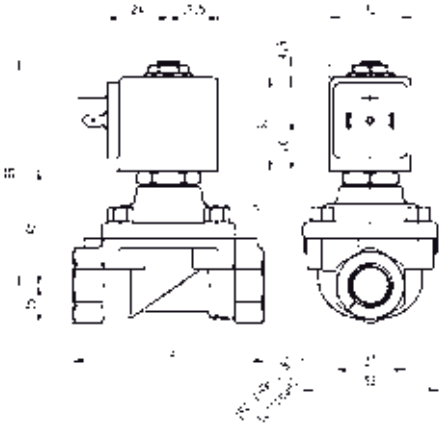

Disegno 3521

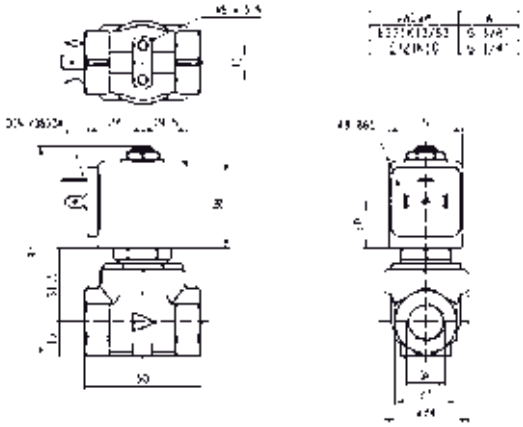

Disegno 3429

2/2 VALVOLE PER OLIO IDRAULICO E LIQUIDI NEUTRI (MAX.100 BAR)

SERVOPILOTATA

OTTONE
MONTAGGIO SU RACCORDI
NORMALMENTE CHIUSA

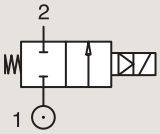

Raccordi	Orifizio Ø	Fattore Portata			Pressione differenziale			Temp. Fluido		Tenuta	Valvola PARKER LUCIFER®			Potenza		Gruppo Elettrico	Disegno nr.
					Min	Mass		Min	Mass		Valvola	Housing	Bobina				
BSP	mm	Kv l/min	KV m³/h	Qn l/min	bar	AC bar	DC bar	°C	°C					AC W	DC W		
1/2"	15	60	3.6	3150	0.3	40	25	-10	100	NBR	**E321H15** [12]	**2995**	**481865**	8	9	2.0	3522
	15	60	3.6	3150	0.3	40	30	-10	100	NBR	**E321H15** [12]	**4270**	**481000**	8	8	2.0	3522
	15	60	3.6	3150	0.3	40	40	-10	100	NBR	**E321H15** [12]	**4270**	**486265**	14	14	2.0	3522
	15	60	3.6	-	0.3	40	25	-10	100	FKM	**E321H25** [12]	**2995**	**481865**	8	9	2.0/14.2	3522
	15	60	3.6	-	0.3	40	30	-10	120	FKM	**E321H25** [12]	**-**	**483371**	8	8	2.0/14.2	3522
	15	60	3.6	-	0.3	40	40	-10	140	FKM	**E321H25** [12]	**4270**	**486265**	14	14	2.0/14.2	3522

Nota:

1. Pilota con tenuta in Rubino sintetico
2. Pressione differenziale minima = 0,3 bar apertura e 0 bar chiusura

In questa pagina	Raccordi	Orifizio (mm)	Kv (l/min)	Press. Diff. (bar)	Temp. Fluido (°C)	Temp. Amb. (°C)
da	1/2"	15	60	25	-10	-10
a	1/2"	15	60	40	140	50

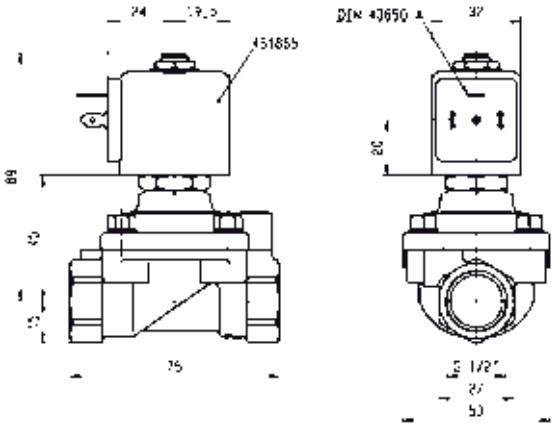

Disegno 3522

2/2 VALVOLE PER OLIO IDRAULICO E LIQUIDI NEUTRI (MAX.100 BAR)

SERVOPILOTATA

OTTONE

MONTAGGIO SU RACCORDI

NORMALMENTE APERTA

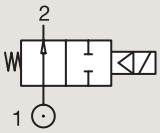

Raccordi	Orifizio Ø	Fattore Portata			Pressione differenziale			Temp. Fluido		Tenuta	Valvola PARKER LUCIFER®			Potenza		Gruppo Elettrico	Disegno nr.
					Min	Mass		Min	Mass		Valvola	Housing	Bobina				
BSP	mm	Kv l/min	KV m³/h	Qn l/min	bar	AC bar	DC bar	°C	°C					AC W	DC W		
1/4"	8	36	2.16	-	0.3	40	40	-10	100	FKM	322H7106 12	2995	481865	8	9	2.0/14.1	3523
	8	36	2.16	-	0.3	40	40	-10	120	FKM	322H7106 12	4270	481000	8	8	2.0/14.1	3523
	8	36	2.16	-	0.3	40	40	-10	140	FKM	322H7106 12	4270	486265	14	14	2.0/14.1	3523
3/8"	11	50	3	3240	0.3	40	40	-10	75	NBR	322H73 12	2995	481865	8	9	2.0	3523
	11	50	3	3240	0.3	40	40	-10	75	NBR	322H73 12	4270	481000	8	8	2.0	3523
	11	50	3	3240	0.3	40	40	-10	75	NBR	322H73 12	4270	486265	14	14	2.0	3523
	11	50	3	-	0.3	40	40	-10	100	FKM	322H7306 12	2995	481865	8	9	2.0/14.1	3523
	11	50	3	-	0.3	40	40	-10	100	FKM	322H7306 12	4270	481000	8	8	2.0/14.1	3523
	11	50	3	-	0.3	40	40	-10	140	FKM	322H7306 12	4270	486265	14	14	2.0/14.1	3523
1/2"	15	60	3.6	3890	0.3	20	20	-10	100	FKM	322G7506	2995	481865	8	9	2.0	3522
	15	60	3.6	3890	0.3	20	20	-10	100	FKM	322G7506	4270	481000	8	8	2.0	3522
	15	60	3.6	3890	0.3	20	20	-10	100	FKM	322G7506	4270	486265	14	14	2.0	3522
	15	60	3.6	3890	0.3	40	40	-10	100	NBR	322H75 12	2995	481865	8	9	2.0	3522
	15	60	3.6	3890	0.3	40	40	-10	100	NBR	322H75 12	4270	481000	8	8	2.0	3522
	15	60	3.6	3890	0.3	40	40	-10	100	NBR	322H75 12	4270	486265	14	14	2.0	3522
	15	60	3.6	-	0.3	40	40	-10	100	FKM	322H7506 12	2995	481865	8	9	2.0/14.1	3522
	15	60	3.6	-	0.3	40	40	-10	120	FKM	322H7506 12	4270	481000	8	8	2.0/14.1	3522
	15	60	3.6	-	0.3	40	40	-10	140	FKM	322H7506 12	4270	486265	14	14	2.0/14.1	3522

Nota:

1. Pilota con tenuta in Rubino sintetico
2. Pressione differenziale minima = 0,3 bar apertura e 0 bar chiusura

In questa pagina	Raccordi	Orifizio (mm)	Kv (l/min)	Press. Diff. (bar)	Temp. Fluido (°C)	Temp. Amb. (°C)
da	1/4"	8	36	20	-10	-10
a	1/2"	15	60	40	140	50

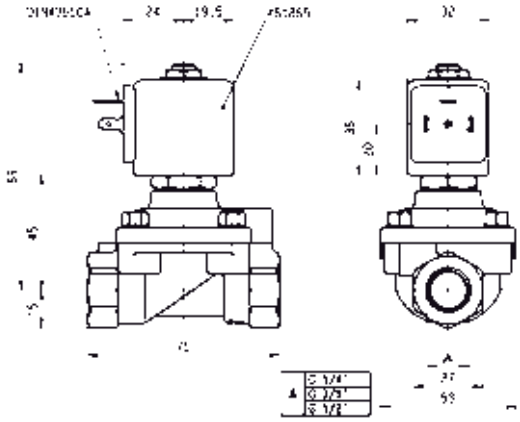

Disegno 3523

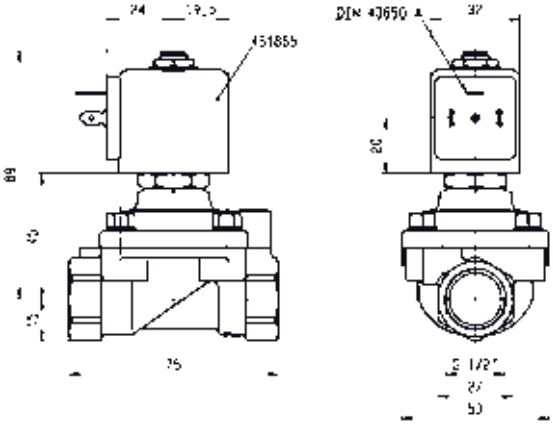

Disegno 3522

2/2 VALVOLE PER OLIO IDRAULICO E LIQUIDI NEUTRI (MAX.100 BAR)

SERVOPILOTATA

OTTONE
MONTAGGIO SOTTOBASE
NORMALMENTE CHIUSA

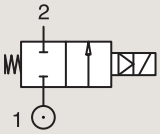

Raccordi	Orifizio Ø	Fattore Portata			Pressione differenziale			Temp. Fluido		Tenuta	Valvola PARKER LUCIFER®			Potenza		Gruppo Elettrico	Disegno nr.
					Min	Mass		Min	Mass		Valvola	Housing	Bobina				
	mm	Kv l/min	KV m³/h	Qn l/min	bar	AC bar	DC bar	°C	°C					AC W	DC W		
SB	14	45	2.7	-	0.3	40	25	-10	100	FKM	E321F3202 12	2995	481865	8	9	2.0	3520
	14	45	2.7	-	0.3	40	30	-10	120	FKM	E321F3202 12	4270	481000	8	8	2.0	3520
	14	45	2.7	-	0.3	40	40	-10	140	FKM	E321F3202 12	4270	486265	14	14	2.0	3520

Nota:

1. Pilota con tenuta in Rubino sintetico
2. Pressione differenziale minima = 0,3 bar apertura e 0 bar chiusura

OTTONE
MONTAGGIO SOTTOBASE
NORMALMENTE APERTA

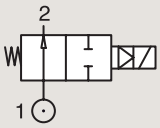

Raccordi	Orifizio Ø	Fattore Portata			Pressione differenziale			Temp. Fluido		Tenuta	Valvola PARKER LUCIFER®			Potenza		Gruppo Elettrico	Disegno nr.
					Min	Mass		Min	Mass		Valvola	Housing	Bobina				
	mm	Kv l/min	KV m³/h	Qn l/min	bar	AC bar	DC bar	°C	°C					AC W	DC W		
SB	14	45	2.7	-	0.3	40	40	0	100	FKM	322F7206 12	2995	481865	8	9	2.1/14.1	3520
	14	45	2.7	-	0.3	40	40	0	120	FKM	322F7206 12	4270	481000	8	8	2.1/14.1	3520

Nota:

1. Pilota con tenuta in Rubino sintetico
2. Pressione differenziale minima = 0,3 bar apertura e 0 bar chiusura

In questa pagina	Raccordi	Orifizio (mm)	Kv (l/min)	Press. Diff. (bar)	Temp. Fluido (°C)	Temp. Amb. (°C)
da	14 mm	14	45	25	-10	-10
a	14 mm	14	45	40	140	50

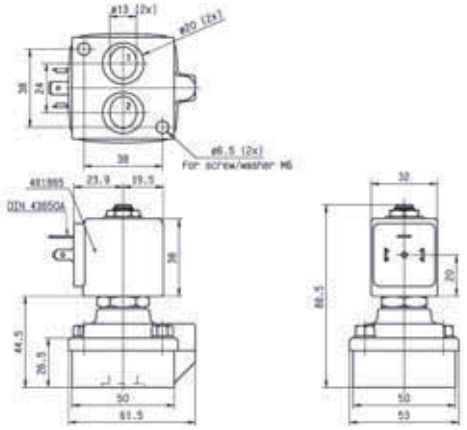

Disegno 3520

VALVOLE AD ALTA RESISTENZA ALLA CORROSIONE (303 STAINLESS STEEL)

2/2

Azionamento	Corpo	Funzione	Raccordi	Orifizio (mm)	Fattore Portata	Pressione Differenziale Mass. (Bar)	Temp. Mass. Fluido	Pagina Elettrovalvola Parker	Pagina Elettrovalvola Parker LUCIFER®
Comando diretto	AISI303/Raccordi	Normalmente chiusa	1/4''	1.5 a 5	10	100	180	-	158
		Normalmente aperta	1/4''	2.5	3	12	120	-	162

2/2 VALVOLE CON ALTA RESISTENZA ALLA CORROSIONE (303 STAINLESS STEEL)

COMANDO DIRETTO

Processo

Impianti Commerciali

AISI 303
MONTAGGIO SU RACCORDI
NORMALMENTE CHIUSA

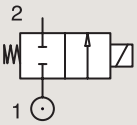

Raccordi	Orifizio Ø	Fattore Portata			Pressione differenziale			Temp. Fluido		Tenuta	Valvola PARKER LUCIFER®			IS	Potenza		Gruppo Elettrico	Disegno nr.
					Min	Mass		Min	Mass		Valvola	Housing	Bobina					
BSP	mm	Kv l/min	KV m³/h	Qn l/min	bar	AC bar	DC bar	°C	°C						AC W	DC W		
1/4"	1.5	1.5	0.09	80	0	20	20	-10	100	FKM	121V5406	2995	481865		8	9	2.0	8116
	1.5	1.5	0.09	80	0	20	20	-10	120	FKM	121V5406	4270	481000		8	8	2.0	8116
	1.5	1.5	0.09	80	0	60	25	0	100	Ruby	121V5463 [1]	2995	481865		8	9	2.0	8116
	1.5	1.5	0.09	80	0	75	30	0	130	Ruby	121V5463 [1]	4270	481000		8	8	2.0	8116
	1.5	1.5	0.09	80	0	100	55	0	140	Ruby	121V5463 [1]	4270	486265		14	14	2.0	8116
	1.5	1.5	0.09	80	0	-	8	-20	75	PUR	121V5497 [2]	2995	482740		-	1.6	3.0/6.0/8.0	8024
	1.5	1.5	0.09	80	0	10	10	-20	75	PUR	121V5497 [2]	-	495900		2.5	2	3.0/6.0/8.0	8024
	1.5	1.5	0.09	80	0	-	10	-20	75	PUR	121V5497 [2]	-	495910	*	-	0.3 to 3	3.0/6.0/8.0	8024
	1.5	1.5	0.09	80	0	-	8	-20	75	PUR	121V5497	2995	496125		-	1.6	3.0/6.0/8.0	8024
	2.5	3.5	0.21	220	0	14	7	-10	100	FKM	121V5706	2995	481865		8	9	2.0	8116
	2.5	3.5	0.21	220	0	14	9	-10	120	FKM	121V5706	4270	481000		8	8	2.0	8116
	2.5	3.5	0.21	220	0	14	14	-10	120	FKM	121V5706	4270	486265		14	14	2.0	8116
	2.5	3.5	0.21	220	0	28	10	0	100	Ruby	121V5763 [1]	2995	481865		8	9	2.0	8116
	2.5	3.5	0.21	220	0	34	12	0	130	Ruby	121V5763 [1]	4270	481000		8	8	2.0	8116
	2.5	3.5	0.21	220	0	50	22	0	140	Ruby	121V5763 [1]	4270	486265		14	14	2.0	8116
	3	4.5	0.27	315	0	10	7	-10	100	FKM	121V5306	2995	481865		8	9	2.0	8116
	3	4.5	0.27	315	0	10	8.5	-10	120	FKM	121V5306	4270	481000		8	8	2.0	8116
	3	4.5	0.27	315	0	10	10	-10	120	FKM	121V5306	4270	486265		14	14	2.0	8116
	3	4.5	0.27	315	0	20	7	0	100	Ruby	121V5363 [1]	2995	481865		8	9	2.0	8116
	3	4.5	0.27	315	0	25	8.5	0	130	Ruby	121V5363 [1]	4270	481000		8	8	2.0	8116
	3	4.5	0.27	315	0	36	15	0	140	Ruby	121V5363 [1]	4270	486265		14	14	2.0	8116

Nota:

1. Valvole compatibili unicamente con olio idraulico e liquidi neutri
2. Acqua compatibile solo fino a 40°C

In questa pagina	Raccordi	Orifizio (mm)	Kv (l/min)	Press. Diff. (bar)	Temp. Fluido (°C)	Temp. Amb. (°C)
da	1/4''	1.5	1.5	7	-20	-20
a	1/4''	3	4.5	100	180	50

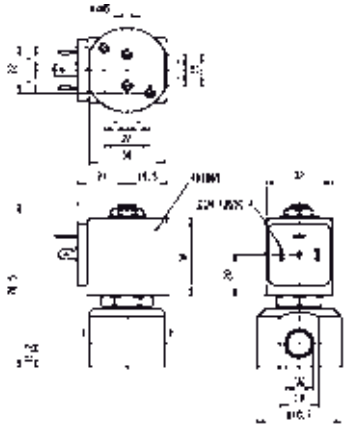

Disegno 8116

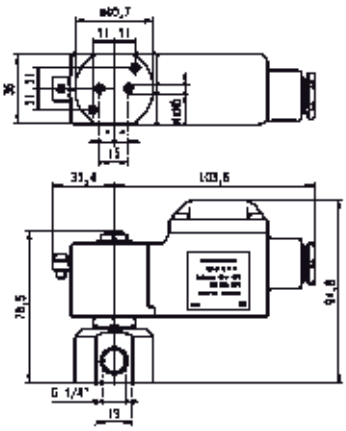

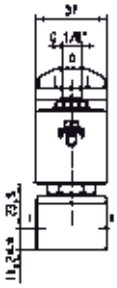

Disegno 8024

2/2 VALVOLE CON ALTA RESISTENZA ALLA CORROSIONE (303 STAINLESS STEEL)

COMANDO DIRETTO

AISI 303

MONTAGGIO SU RACCORDI

NORMALMENTE CHIUSA

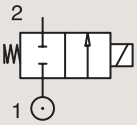

Raccordi	Orifizio Ø	Fattore Portata			Pressione differenziale			Temp. Fluido		Tenuta	Valvola PARKER LUCIFER®			IS	Potenza		Gruppo Elettrico	Disegno nr.
					Min	Mass		Min	Mass		Valvola	Housing	Bobina					
BSP	mm	Kv l/min	KV m³/h	Qn l/min	bar	AC bar	DC bar	°C	°C						AC W	DC W		
1/4"	3	3.5	0.21	220	0	-	2	-20	75	PUR	121V5397 [2]	2995	482740		-	1.6	3.0/6.0/8.0	8024
	3	3.5	0.21	220	0	4.5	4	-20	75	PUR	121V5397 [2]	-	495900		2.5	2	3.0/6.0/8.0	8024
	3	3.5	0.21	220	0	-	4.5	-20	75	PUR	121V5397 [2]	-	495910	*	-	0.3 to 3	3.0/6.0/8.0	8024
	3	3.5	0.21	220	0	-	2	-20	75	PUR	121V5397	2995	496125		-	1.6	3.0/6.0/8.0	8024
	4	7	0.42	450	0	10	4	-10	100	FKM	121V5206	2995	481865		8	9	2.0	8116
	4	7	0.42	450	0	10	5	-10	120	FKM	121V5206	4270	481000		8	8	2.0	8116
	4	7	0.42	450	0	10	10	-10	120	FKM	121V5206	4270	486265		14	14	2.0	8116
	4	7	0.42	450	0	3.5	3.5	0	100	PTFE	121V5212 [1]	2995	481865		8	9	2.0	8116
	4	7	0.42	450	0	3.5	3.5	0	130	PTFE	121V5212 [1]	4270	481000		8	8	2.0	8116
	4	7	0.42	450	0	3.5	3.5	0	130	PTFE	121V5212 [1]	4270	486265		14	14	2.0	8116
	4	7	0.42	450	0	12	4	0	100	Ruby	121V5263 [1]	2995	481865		8	9	2.0	8116
	4	7	0.42	450	0	15	5	0	130	Ruby	121V5263 [1]	4270	481000		8	8	2.0	8116
	4	7	0.42	450	0	22	10	0	180	Ruby	121V5263 [1]	4270	486265		14	14	2.0	8116
	5	10	0.6	750	0	7	2	-10	100	FKM	121V5106	2995	481865		8	9	2.0	8116
	5	10	0.6	750	0	7	2.8	-10	120	FKM	121V5106	4270	481000		8	8	2.0	8116
	5	10	0.6	750	0	7	5	-10	120	FKM	121V5106	4270	486265		14	14	2.0	8116
	5	10	0.6	-	0	2.8	2	0	100	PTFE	121V5112 [1]	2995	481865		8	9	2.0	8116
	5	10	0.6	-	0	2.8	2.8	0	130	PTFE	121V5112 [1]	4270	481000		8	8	2.0	8116
	5	10	0.6	-	0	2.8	2.8	0	130	PTFE	121V5112 [1]	4270	486265		14	14	2.0	8116
	5	10	0.6	750	0	8.5	2	0	100	Ruby	121V5163 [1]	2995	481865		8	9	2.0	8116
	5	10	0.6	750	0	10	3.5	0	130	Ruby	121V5163 [1]	4270	481000		8	8	2.0	8116
	5	10	0.6	750	0	14	6.5	0	140	Ruby	121V5163 [1]	4270	486265		14	14	2.0	8116

Nota:

1. Valvole compatibili unicamente con olio idraulico e liquidi neutri
2. Acqua compatibile solo fino a 40°C

In questa pagina	Raccordi	Orifizio (mm)	Kv (l/min)	Press. Diff. (bar)	Temp. Fluido (°C)	Temp. Amb. (°C)
da	1/4''	3	3.5	2	-20	-20
a	1/4''	5	10	22	180	50

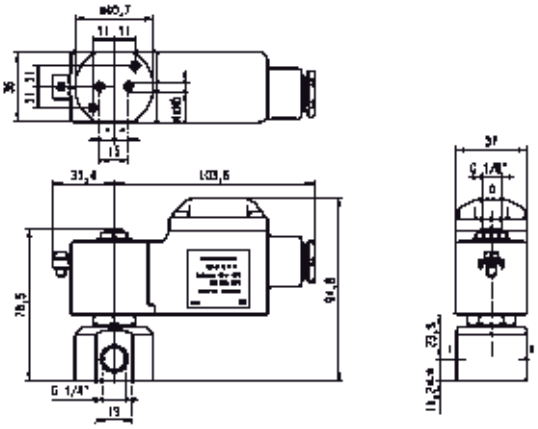

Disegno 8024

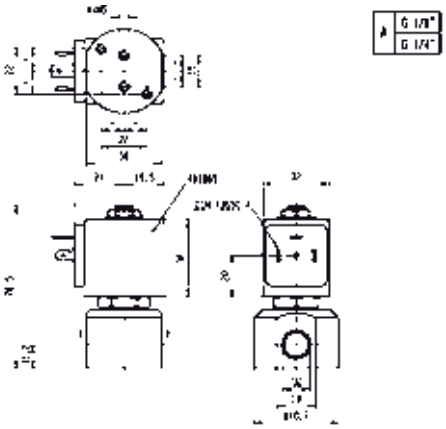

Disegno 8116

2/2 VALVOLE CON ALTA RESISTENZA ALLA CORROSIONE (303 STAINLESS STEEL)

COMANDO DIRETTO

AISI 303

MONTAGGIO SU RACCORDI

NORMALMENTE APERTA

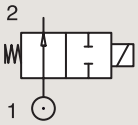

Raccordi	Orifizio Ø	Fattore Portata			Pressione differenziale			Temp. Fluido		Tenuta	Valvola PARKER LUCIFER®			Potenza		Gruppo Elettrico	Disegno nr.
					Min	Mass		Min	Mass		Valvola	Housing	Bobina				
BSP	mm	Kv l/min	KV m³/h	Qn l/min	bar	AC bar	DC bar	°C	°C					AC W	DC W		
1/4''	2.5	3	0.18	180	0	12	12	-30	100	FKM	**122V8306**	**2995**	**481865**	8	9	2.1	8116
	2.5	3	0.18	180	0	12	12	-30	120	Ruby	**122V8306**	**4270**	**481000**	8	8	2.1	8116

In questa pagina	Raccordi	Orifizio (mm)	Kv (l/min)	Press. Diff. (bar)	Temp. Fluido (°C)	Temp. Amb. (°C)
da	1/4''	2.5	3	12	-30	-10
a	1/4''	2.5	3	12	120	50

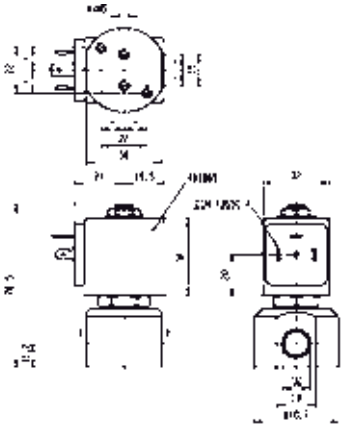

Disegno 8116

VALVOLE AD ALTA RESISTENZA ALLA CORROSIONE (316 STAINLESS STEEL)

2/2

Azionamento	Corpo	Funzione	Raccordi	Orifizio (mm)	Fattore Portata	Pressione Differenziale Mass. (Bar)	Temp. Mass. Fluido	Pagina Elettrovalvola Parker	Pagina Elettrovalvola Parker LUCIFER®
Comando diretto	AISI 316L/Montaggio su raccordi	Normalmente chiusa	1/4''	1.5 a 3.5	2.3	20	140	**166**	-
			1/8''	1.5 a 2.5	2.3	20	140	**166**	-
			1/2''	5 a 6.2	13	4	140	**168**	-
			3/8''	5 a 6.2	13	4	140	**168**	-
			1/4''	1	0.6	98	75	-	**170**
Magnalift	AISI 316L/Montaggio su raccordi	Normalmente chiusa	1/2''	15	50	10	140	**172**	-
			3/4''	24	95	10	140	**172**	-
			3/8''	15	40	10	140	**172**	-
			1''	24	105	10	140	**174**	-

2/2 VALVOLE CON ALTA RESISTENZA ALLA CORROSIONE (316 STAINLESS STEEL)

COMANDO DIRETTO

Impianti Commerciali

Medicale / Strumentazione

Impianti Industriali

AISI 316L

MONTAGGIO SU RACCORDI

NORMALMENTE CHIUSA

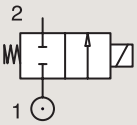

Raccordi	Orifizio Ø	Fattore Portata			Pressione differenziale			Temp. Fluido		Tenuta	Valvola PARKER			Potenza		Gruppo Elettrico	Disegno nr.
					Min	Mass		Min	Mass		Valvola	Housing	Bobina				
BSP	mm	Kv l/min	KV m³/h	Qn l/min	bar	AC bar	DC bar	°C	°C					AC W	DC W		
1/8"	1.5	1	0.06	-	0	20	-	-10	140	FKM	**201LG1GVG2**	**-**	**WB4.5**	4.5	-	1.1/1.3	074
	1.5	1	0.06	-	0	-	10	-10	140	FKM	**201LG1GVG2**	**-**	**WB5.0**	-	5	1.1/1.3	074
	2	1.8	0.11	-	0	15	-	-10	140	FKM	**201LG1JVG2**	**-**	**WB4.5**	4.5	-	1.1/1.3	074
	2	1.8	0.11	-	0	-	7	-10	140	FKM	**201LG1JVG2**	**-**	**WB5.0**	-	5	1.1/1.3	074
	2.5	2.3	0.14	-	0	10	-	-10	140	FKM	**201LG1LVG2**	**-**	**WB4.5**	4.5	-	1.1/1.3	074
	2.5	2.3	0.14	-	0	-	4	-10	140	FKM	**201LG1LVG2**	**-**	**WB5.0**	-	5	1.1/1.3	074
1/4"	1.5	1	0.06	-	0	20	-	-10	140	FKM	**201LG2GVG2**	**-**	**WB4.5**	4.5	-	1.1/1.3	075
	1.5	1	0.06	-	0	-	10	-10	140	FKM	**201LG2GVG2**	**-**	**WB5.0**	-	5	1.1/1.3	075
	2	1.8	0.11	-	0	15	-	-10	140	FKM	**201LG2JVG2**	**-**	**WB4.5**	4.5	-	1.1/1.3	075
	2	1.8	0.11	-	0	-	7	-10	140	FKM	**201LG2JVG2**	**-**	**WB5.0**	-	5	1.1/1.3	075
	2.5	2.3	0.14	-	0	10	-	-10	140	FKM	**201LG2LVG2**	**-**	**WB4.5**	4.5	-	1.1/1.3	075
	2.5	2.3	0.14	-	0	-	4	-10	140	FKM	**201LG2LVG2**	**-**	**WB5.0**	-	5	1.1/1.3	075
	3	0.5	0.027	-	0	8	8	-10	140	FKM	**201LG2NVG7**	**-**	**481865**	8	9	2.0	076
	3	0.5	0.027	-	0	10	11	-10	140	FKM	**201LG2NVG7**	**-**	**491514**	13	16	2.0	076
	3.5	0.6	0.036	-	0	6	6	-10	140	FKM	**201LG2PVG7**	**-**	**481865**	8	9	2.0	076
	3.5	0.6	0.036	-	0	7	8	-10	140	FKM	**201LG2PVG7**	**-**	**491514**	13	16	2.0	076

In questa pagina	Raccordi	Orifizio (mm)	Kv (l/min)	Press. Diff. (bar)	Temp. Fluido (°C)	Temp. Amb. (°C)
da	1/8''	1.5	0.5	4	-10	-10
a	1/4''	3.5	2.3	20	140	50

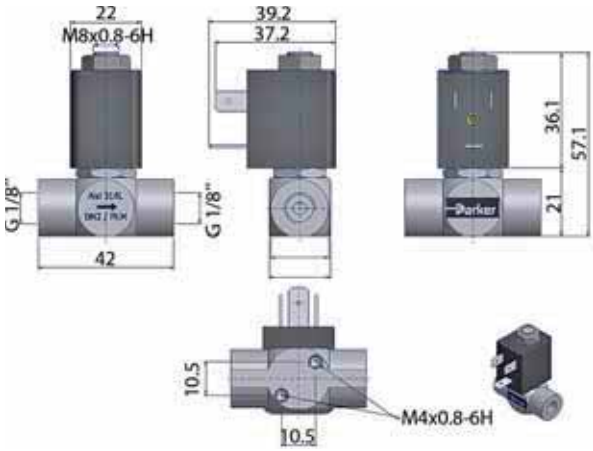

Disegno 074

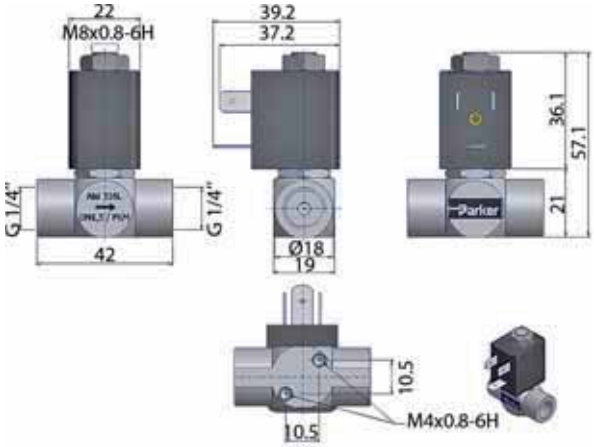

Disegno 075

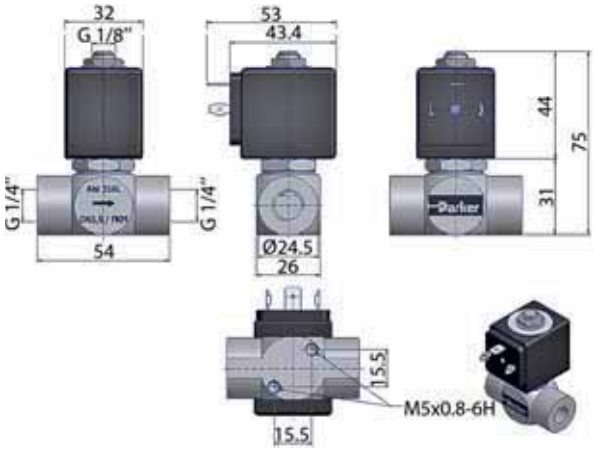

Disegno 076

2/2 VALVOLE CON ALTA RESISTENZA ALLA CORROSIONE (316 STAINLESS STEEL)

COMANDO DIRETTO

AISI 316L

MONTAGGIO SU RACCORDI

NORMALMENTE CHIUSA

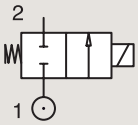

Raccordi	Orifizio Ø	Fattore Portata			Pressione differenziale			Temp. Fluido		Tenuta	Valvola PARKER			Potenza		Gruppo Elettrico	Disegno nr.
					Min	Mass		Min	Mass		Valvola	Housing	Bobina				
BSP	mm	Kv l/min	KV m³/h	Qn l/min	bar	AC bar	DC bar	°C	°C					AC W	DC W		
3/8"	5	11	0.66	-	0	3	3	-10	140	FKM	**201LG3SVG7**	**-**	**481865**	8	9	2.0	077
	5	11	0.66	-	0	4	4	-10	140	FKM	**201LG3SVG7**	**-**	**491514**	13	16	2.0	077
	6.2	13	0.78	-	0	2	2	-10	140	FKM	**201LG3UVG7**	**-**	**481865**	8	9	2.0	077
	6.2	13	0.78	-	0	2	3	-10	140	FKM	**201LG3UVG7**	**-**	**491514**	13	16	2.0	077
1/2"	5	11	0.66	-	0	3	3	-10	140	FKM	**201LG4SVG7**	**-**	**481865**	8	9	2.0	078
	5	11	0.66	-	0	4	4	-10	140	FKM	**201LG4SVG7**	**-**	**491514**	13	16	2.0	078
	6.2	13	0.78	-	0	2	2	-10	140	FKM	**201LG4UVG7**	**-**	**481865**	8	9	2.0	078
	6.2	13	0.78	-	0	2	3	-10	140	FKM	**201LG4UVG7**	**-**	**491514**	13	16	2.0	078

In questa pagina	Raccordi	Orifizio (mm)	Kv (l/min)	Press. Diff. (bar)	Temp. Fluido (°C)	Temp. Amb. (°C)
da	3/8''	5	11	2	-10	-10
a	1/2''	6.2	13	4	140	50

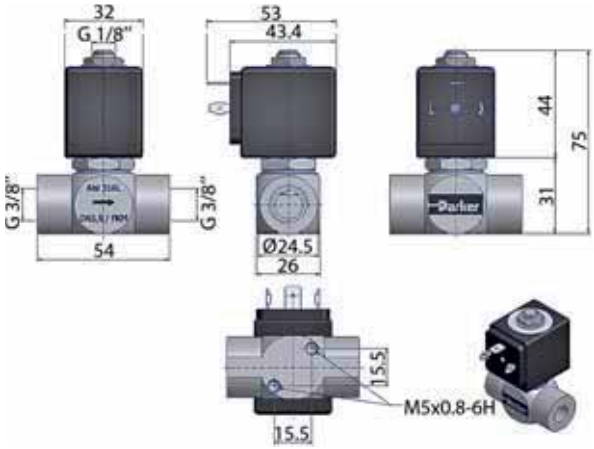

Disegno 077

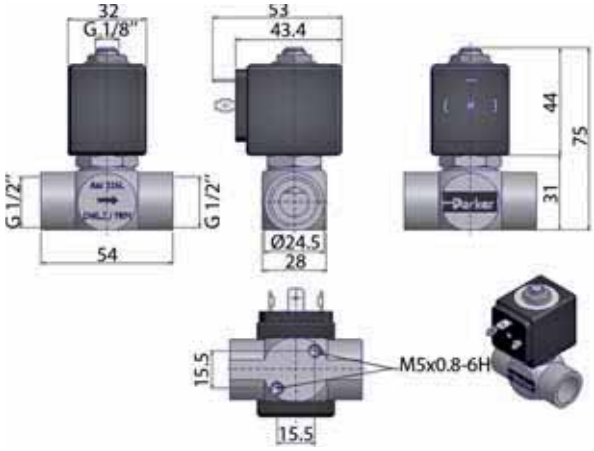

Disegno 078

2/2 VALVOLE CON ALTA RESISTENZA ALLA CORROSIONE (316 STAINLESS STEEL)

COMANDO DIRETTO

AISI 316L

MONTAGGIO SU RACCORDI

NORMALMENTE CHIUSA

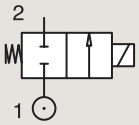

Raccordi	Orifizio Ø	Fattore Portata			Pressione differenziale			Temp. Fluido		Tenuta	Valvola PARKER LUCIFER®			IS	Potenza		Gruppo Elettrico	Disegno nr.
					Min	Mass		Min	Mass		Valvola	Housing	Bobina					
	mm	Kv l/min	KV m³/h	Qn l/min	bar	AC bar	DC bar	°C	°C						AC W	DC W		
1/4" NPT	1	0.6	0.036	40	0	-	98	-40	75	PUR	**U121V5595** [1]	**-**	**492210**		-	1.8	9.0/10.1	6713
	1	0.6	0.036	40	0	-	98	-40	75	PUR	**U121V5595** [1]	**-**	**496565**	*	-	0.3	9.0/10.1	6713
	1	0.6	0.036	40	0	98	98	-40	75	PUR	**U121V5595** [1]	**-**	**496800**		8	8	9.0/10.1	6713
	1	0.6	0.036	40	0	98	98	-40	75	PUR	**U121V5595** [1]	**-**	**496895**		8	8	9.0/10.1	6713
	1	0.6	0.036	40	0	98	98	-40	75	PUR	**U121V5596** [1]	**-**	**492310**		6	6	10.1	6713
	1	0.6	0.036	40	0	98	98	-40	75	PUR	**U121V5596** [1]	**-**	**496560**		8	8	10.1	6713
	1	0.6	0.036	40	0	98	98	-40	75	PUR	**U121V5596** [1]	**-**	**496800**		8	8	10.1	6713
	1	0.6	0.036	40	0	98	98	-10	75	PUR	**U121V55961D** [1]	**-**	**483270**		8	8	11.0	6714
	1	0.6	0.036	40	0	98	98	-10	75	PUR	**U121V55961D** [1]	**-**	**483270,02**		8	8	11.0	6714

Nota:

1. Valvola consegnato con un certificato di tracciabilità dei materiali.

In questa pagina	Raccordi	Orifizio (mm)	Kv (l/min)	Press. Diff. (bar)	Temp. Fluido (°C)	Temp. Amb. (°C)
da	1/4''	1	0.6	98	-40	-40
a	1/4''	1	0.6	98	75	50

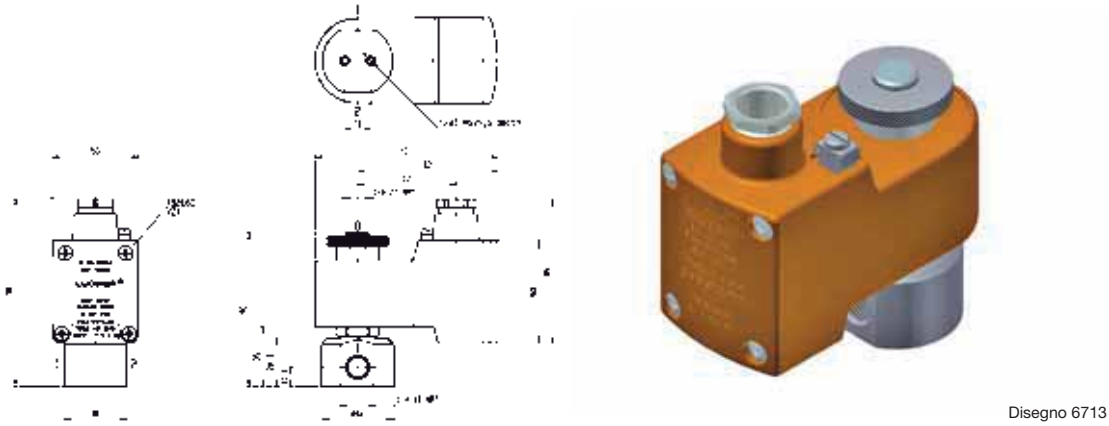

Disegno 6713

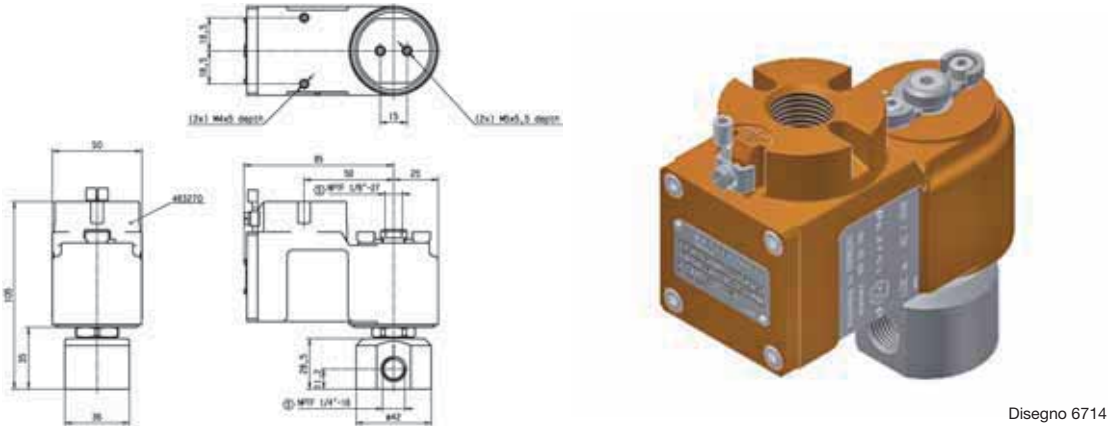

Disegno 6714

2/2 VALVOLE CON ALTA RESISTENZA ALLA CORROSIONE (316 STAINLESS STEEL)

MAGNALIFT

Impianti Commerciali

Medicale / Strumentazione

Impianti Industriali

AISI 316L
MONTAGGIO SU RACCORDI
NORMALMENTE CHIUSA

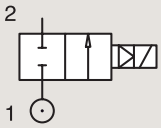

Raccordi	Orifizio Ø	Fattore Portata			Pressione differenziale			Temp. Fluido		Tenuta	Valvola PARKER			Potenza		Gruppo Elettrico	Disegno nr.
					Min	Mass		Min	Mass		Valvola	Housing	Bobina				
BSP	mm	Kv l/min	KV m³/h	Qn l/min	bar	AC bar	DC bar	°C	°C					AC W	DC W		
3/8"	15	40	2.4	-	0	10	-	-10	85	EPDM	**221S10E**	**2995**	**481865**	8	-	2.0	067
	15	40	2.4	-	0	10	7	-10	140	EPDM	**221S10E** [1]	**4270**	**486265**	14	14	2.0	067
	15	40	2.4	-	0	10	-	-10	85	FKM	**221S10F**	**2995**	**481865**	8	-	2.0	067
	15	40	2.4	-	0	10	7	-10	85	FKM	**221S10F** [1]	**4270**	**486265**	14	14	2.0	067
1/2"	15	50	3	-	0	10	-	-10	85	EPDM	**221S15E**	**2995**	**481865**	8	-	2.0	068
	15	50	3	-	0	10	7	-10	140	EPDM	**221S15E** [1]	**4270**	**486265**	14	14	2.0	068
	15	50	3	-	0	10	-	-10	85	FKM	**221S15F**	**2995**	**481865**	8	-	2.0	068
	15	50	3	-	0	10	7	-10	85	FKM	**221S15F** [1]	**4270**	**486265**	14	14	2.0	068
3/4"	24	95	5.7	-	0	10	-	-10	85	EPDM	**221S20E**	**2995**	**481865**	8	-	2.0	069
	24	95	5.7	-	0	10	7	-10	140	EPDM	**221S20E** [1]	**4270**	**486265**	14	14	2.0	069
	24	95	5.7	-	0	10	-	-10	85	FKM	**221S20F**	**2995**	**481865**	8	-	2.0	069
	24	95	5.7	-	0	10	7	-10	85	FKM	**221S20F** [1]	**4270**	**486265**	14	14	2.0	069

Nota:

1. Pressione massima vapore: 4 bar (140°C)

In questa pagina	Raccordi	Orifizio (mm)	Kv (l/min)	Press. Diff. (bar)	Temp. Fluido (°C)	Temp. Amb. (°C)
da	3/8''	15	40	7	-10	-10
a	3/4''	24	95	10	140	50

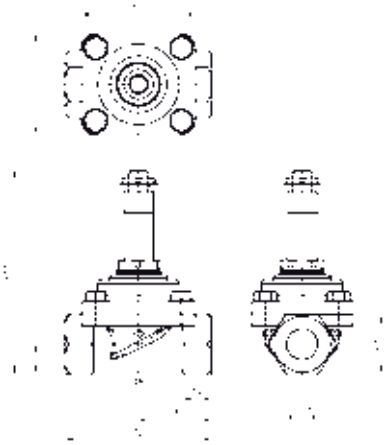

Drawing 067

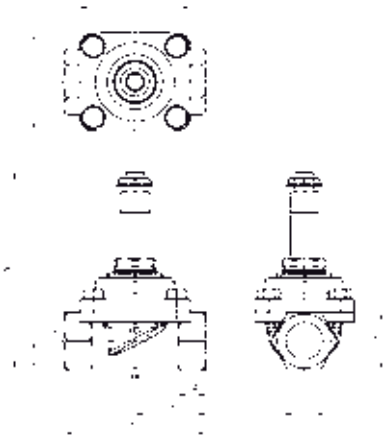

Drawing 068

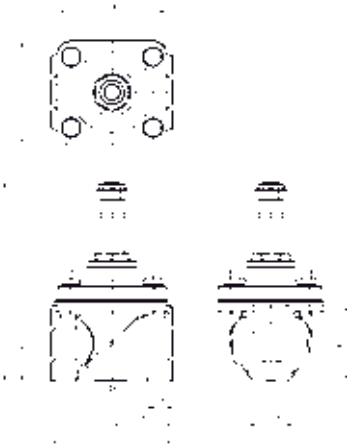

Drawing 069

2/2 VALVOLE CON ALTA RESISTENZA ALLA CORROSIONE (316 STAINLESS STEEL)

MAGNALIFT

AISI 316L

MONTAGGIO SU RACCORDI

NORMALMENTE CHIUSA

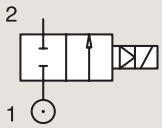

Raccordi	Orifizio Ø	Fattore Portata			Pressione differenziale			Temp. Fluido		Tenuta	Valvola PARKER			Potenza		Gruppo Elettrico	Disegno nr.
					Min	Mass		Min	Mass		Valvola	Housing	Bobina				
BSP	mm	Kv l/min	KV m³/h	Qn l/min	bar	AC bar	DC bar	°C	°C					AC W	DC W		
1"	24	105	6.3	-	0	10	-	-10	85	EPDM	**221S25E**	**2995**	**481865**	8	-	2.0	070
	24	105	6.3	-	0	10	7	-10	140	EPDM	**221S25E** [1]	**4270**	**486265**	14	14	2.0	070
	24	105	6.3	-	0	10	-	-10	85	FKM	**221S25F**	**2995**	**481865**	8	-	2.0	070
	24	105	6.3	-	0	10	7	-10	85	FKM	**221S25F** [1]	**4270**	**486265**	14	14	2.0	070

Nota:

1. Pressione massima vapore: 4 bar (140°C)

In questa pagina	Raccordi	Orifizio (mm)	Kv (l/min)	Press. Diff. (bar)	Temp. Fluido (°C)	Temp. Amb. (°C)
da	1''	24	105	7	-10	-10
a	1''	24	105	10	140	50

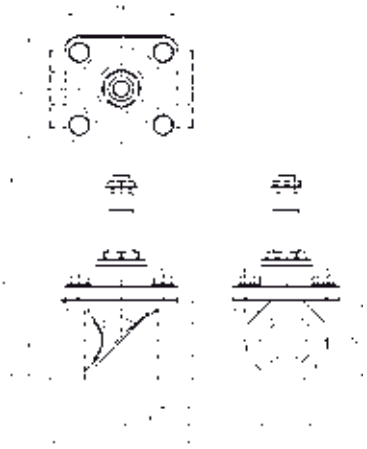

Drawing 070

VALVOLE PER BRUCIATORI

Bruciatori

2/2

Azionamento	Corpo	Funzione	Raccordi	Orifizio (mm)	Fattore Portata	Pressione Differenziale Mass. (Bar)	Temp. Mass. Fluido	Pagina Elettrovalvola Parker	Pagina Elettrovalvola Parker LUCIFER®
Comando diretto	Ottone/Raccordi	Normalmente chiusa	1/8''	1.7 a 4	5.3	30	160	178	184
			1/4''	2.5 a 4	6.5	30	160	180	184
			3/8''	5 a 11	22	30	160	182	184
			1/2''	5 a 14	25	30	160	182	184
	Ottone/Raccordi	Normalmente aperta	1/8''	2.5 a 3	4	30	160	186	188
			1/4''	2.5 a 3	4	30	160	186	188
	Ottone/Sottobase	Normalmente chiusa	14 mm	14	25	30	160	-	188
Magnalift	Ottone/Raccordi	Normalmente chiusa	1/2''	15	50	5	140	-	190
Servopilotata	Ottone/Raccordi	Normalmente chiusa	1/4''	8	36	40	140	-	192
			3/8''	11	50	40	160	-	192
			1/2''	15	60	40	160	-	194
Servopilotata	Ottone/Sottobase	Normalmente chiusa	14 mm	14	45	30	160	-	194

2/2 VALVOLE PER BRUCIATORI

COMANDO DIRETTO

Sistemi di Riscaldamento

Impianti Commerciali

OTTONE
MONTAGGIO SU RACCORDI
NORMALMENTE CHIUSA

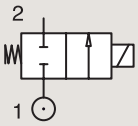

Raccordi	Orifizio Ø	Fattore portata			Pressione differenziale			Temp. Fluido		Tenuta	Valvola PARKER			Potenza		Gruppo Electtrico	Disegno nr.
					Min	Mass		Min	Mass		Codice di Ordinazione	Modello valvola	Modello bobina				
BSP	mm	Kv l/min	KV m³/h	Qn m³/h	bar	AC bar	DC bar	°C	°C					AC W	DC W		
1/8"	1.7	1.4	0.086	-	0	25	-	-10	90	NBR	**390034** [2]	**131IN**	**KT09** 110-120/60	9	-	22.0	015
	1.7	1.4	0.086	-	0	25	-	-10	90	NBR	**390085** [2]	**131IN**	**KT09** 208-230/60	9	-	22.0	015
	1.7	1.4	0.086	-	0	25	-	-10	90	NBR	**390005** [2]	**131IN**	**KT09** 24/50	9	-	22.0	015
	1.7	1.4	0.086	-	0	-	22	-10	90	NBR	**390120** [2]	**131IN**	**KT10** 24 DC	-	10	22.0	015
	1.7	1.4	0.086	-	0	25	-	-10	90	NBR	**390300** [12]	**131INDIN**	**XT09** 230/50	9	-	22.0	015
	1.7	1.4	0.086	-	0	25	-	-10	90	FKM	**390086** [2]	**131IV**	**KT09** 208-230/60	9	-	22.0	015
	1.7	1.4	0.086	-	0	25	-	-10	90	FKM	**390088** [12]	**131IV**	**KT09** 230/50	9	-	22.0	015
	1.7	1.4	0.086	-	0	25	-	-10	90	FKM	**390089** [2]	**131IV**	**KT09** 240/50	9	-	22.0	015
	2.2	2	0.12	-	0	15	-	-10	90	NBR	**390216** [2]	**131AN**	**KT09** 208-230/60	9	-	22.0	015
	2.2	2	0.12	-	0	15	-	-10	90	NBR	**390165** [2]	**131AN**	**KT09** 230/50	9	-	22.0	015
	2.2	2	0.12	-	0	15	-	-10	90	NBR	**390145** [2]	**131AN**	**KT09** 24/50	9	-	22.0	015
	2.2	2	0.12	-	0	15	-	-10	90	NBR	**390150** [2]	**131AN**	**KT09** 42/50	9	-	22.0	015
	2.2	2	0.12	-	0	-	13	-10	90	NBR	**390195** [2]	**131AN**	**KT10** 12 DC	-	10	22.0	015
	2.2	2	0.12	-	0	-	13	-10	90	NBR	**390215** [2]	**131AN**	**KT10** 24 DC	-	10	22.0	015
	2.5	3.2	0.192	-	0	30	-	-30	140	Ruby	**362496J**	**PM140IR**	**ZB09**	9	-	20.1/20.2	027
	2.5	3.2	0.192	-	0	-	17	-30	140	Ruby	**362496J**	**PM140IR**	**ZB12**	-	12	20.1/20.2	027
	2.8	2.9	0.174	-	0	8	-	-10	140	FKM	**390445** [2]	**131.4BV**	**KT09** 115/50	9	-	22.0	012
	2.8	2.9	0.174	-	0	8	-	-10	140	FKM	**390457** [2]	**131.4BV**	**KT09** 115/60	9	-	22.0	012
	2.8	2.9	0.174	-	0	8	-	-10	140	FKM	**390458** [2]	**131.4BV**	**KT09** 208-230/60	9	-	22.0	012
	2.8	2.9	0.174	-	0	8	-	-10	140	FKM	**390465** [2]	**131.4BV**	**KT09** 230/50	9	-	22.0	012
	2.8	2.9	0.174	-	0	8	-	-10	140	FKM	**390405** [2]	**131.4BV**	**KT09** 24/50	9	-	22.0	012
	2.8	2.9	0.174	-	0	-	6	-10	140	FKM	**390495** [2]	**131.4BV**	**KT10** 12 DC	-	10	22.0	012
	2.8	2.9	0.174	-	0	-	6	-10	140	FKM	**390505** [2]	**131.4BV**	**KT10** 24 DC	-	10	22.0	012

Nota:

1. Approvato DIN-EN-ISO23553-1(2009-10) per bruciatori
2. Codice di ordinazione legato a una valvola completa di bobina, con il voltaggio indicato.

In questa pagina	Raccordi	Orifizio (mm)	Kv (l/min)	Press. Diff. (bar)	Temp. Fluido (°C)	Temp. Amb. (°C)
da	1/8''	1.7	1.4	6	-30	-10
a	1/8''	2.8	3.2	30	140	50

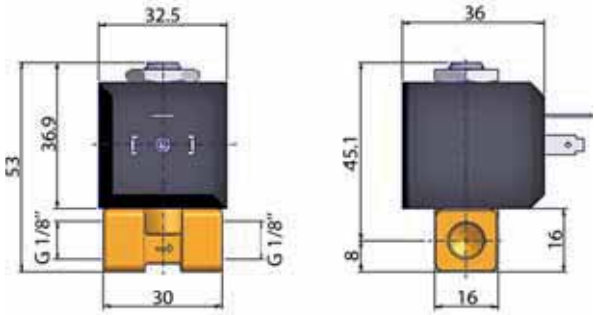

Disegno 015

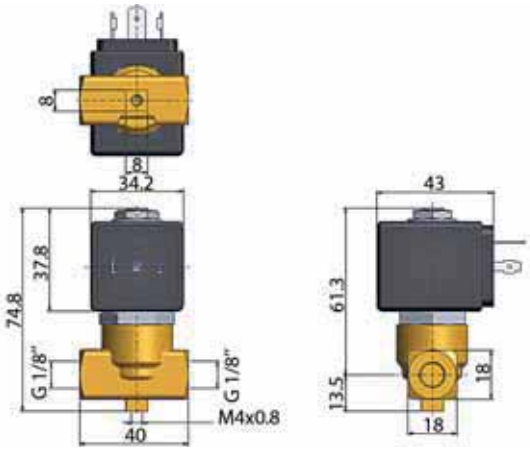

Disegno 027

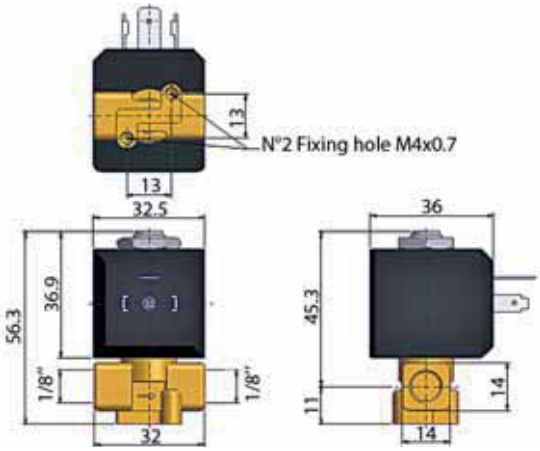

Disegno 012

2/2 VALVOLE PER BRUCIATORI

COMANDO DIRETTO

OTTONE
MONTAGGIO SU RACCORDI
NORMALMENTE CHIUSA

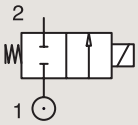

Raccordi	Orifizio Ø	Fattore portata			Pressione differenziale			Temp. Fluido		Tenuta	Valvola PARKER			Potenza		Gruppo Electtrico	Disegno nr.
					Min	Mass		Min	Mass								
BSP	mm	Kv l/min	KV m³/h	Qn m³/h	bar	AC bar	DC bar	°C	°C		Codice di Ordinazione	Modello valvola	Modello bobina	AC W	DC W		
1/8"	3	4	0.24	-	0	30	-	-30	140	Ruby	362510J [1]	PM140.4AR	ZH14	14	-	20.2	025
	4	5.3	0.318	-	0	2	-	-10	90	NBR	390874 [2]	131.4CG	KT09 115/50	9	-	22.0	013
	4	5.3	0.318	-	0	2	-	-10	90	NBR	390813 [2]	131.4CG	KT09 115/60	9	-	22.0	013
	4	5.3	0.318	-	0	2	-	-10	90	NBR	390878 [2]	131.4CG	KT09 230/50	9	-	22.0	013
	4	5.3	0.318	-	0	2	-	-10	90	NBR	390805 [2]	131.4CG	KT09 24/50	9	-	22.0	013
	4	5.3	0.318	-	0	2	-	-10	90	NBR	390875 [2]	131.4CG	KT09 240/50	9	-	22.0	013
	4	5.3	0.318	-	0	-	1	-10	90	NBR	390803 [2]	131.4CG	KT10 12DC	-	10	22.0	013
	4	5.3	0.318	-	0	-	1	-10	90	NBR	390802 [2]	131.4CG	KT10 24 DC	-	10	22.0	013
1/4"	2.5	3.2	0.192	-	0	30	-	-30	140	Ruby	362518J [1]	PM140CR	ZB09	9	-	20.1/20.2	026
	2.5	3.2	0.192	-	0	-	17	-30	140	Ruby	362518J [1]	PM140CR	ZB12	-	12	20.1/20.2	026
	2.5	3.2	0.192	-	0	30	-	-30	140	Ruby	362518J [1]	PM140CR	ZH14	14	-	20.1/20.2	026
	2.5	3.2	0.192	-	0	-	17	-30	140	Ruby	362518J [1]	PM140CR	ZH16	-	16	20.1/20.2	026
	2.8	2.9	0.174	-	0	8	-	-10	140	FKM	390560 [2]	131.4FV	KT09 115/50	9	-	22.0	014
	2.8	2.9	0.174	-	0	8	-	-10	140	FKM	390560 [2]	131.4FV	KT09 115/60	9	-	22.0	014
	2.8	2.9	0.174	-	0	8	-	-10	140	FKM	390626 [2]	131.4FV	KT09 208-230/60	9	-	22.0	014
	2.8	2.9	0.174	-	0	8	-	-10	140	FKM	390580 [2]	131.4FV	KT09 230/50	9	-	22.0	014
	2.8	2.9	0.174	-	0	8	-	-10	140	FKM	390525 [2]	131.4FV	KT09 24/50	9	-	22.0	014
	2.8	2.9	0.174	-	0	-	6	-10	140	FKM	390605 [2]	131.4FV	KT10 12 DC	-	10	22.0	014
	2.8	2.9	0.174	-	0	-	6	-10	140	FKM	390625 [2]	131.4FV	KT10 24 DC	-	10	22.0	014
	3	4	0.24	-	0	30	-	-30	140	Ruby	362530J [1]	PM140.4DR	ZH14	14	-	20.2	026
	3	4	0.24	-	0	30	-	-30	140	Ruby	362524J	PM140DR	ZB09	9	-	20.1/20.2	026
	3	4	0.24	-	0	-	12	-30	140	Ruby	362524J	PM140DR	ZB12	-	12	20.1/20.2	026
	3	4	0.24	-	0	30	-	-30	140	Ruby	362524J	PM140DR	ZH14	14	-	20.1/20.2	026
	3	4	0.24	-	0	-	12	-30	140	Ruby	362524J	PM140DR	ZH16	-	16	20.1/20.2	026
	4	5.3	0.318	-	0	1	-	-10	90	NBR	390915 [2]	131.4GG	KT09 115/50	9	-	22.0	013
	4	5.3	0.318	-	0	1	-	-10	90	NBR	390945 [2]	131.4GG	KT09 230/50	9	-	22.0	013
	4	5.3	0.318	-	0	1	-	-10	90	NBR	390895 [2]	131.4GG	KT09 24/50	9	-	22.0	013
	4	5.3	0.318	-	0	1	-	-10	90	NBR	390975 [2]	131.4GG	KT09 240/50	9	-	22.0	013
	4	5.3	0.318	-	0	-	1	-10	90	NBR	390995 [2]	131.4GG	KT10 12 DC	-	10	22.0	013
	4	5.3	0.318	-	0	-	1	-10	90	NBR	390997 [2]	131.4GG	KT10 24 DC	-	10	22.0	013
	4	5.3	0.318	-	0	2	-	-10	140	FKM	390668 [2]	131.4GV	KT09 115/50	9	-	22.0	014
	4	5.3	0.318	-	0	2	-	-10	140	FKM	390700 [2]	131.4GV	KT09 115/60	9	-	22.0	014
	4	5.3	0.318	-	1	2	-	-10	140	FKM	390725 [2]	131.4GV	KT09 208-230/60	9	-	22.0	014

Nota:

1. Approvato DIN-EN-ISO23553-1(2009-10) per bruciatori
2. Codice di ordinazione legato a una valvola completa di bobina, con il voltaggio indicato.

In questa pagina	Raccordi	Orifizio (mm)	Kv (l/min)	Press. Diff. (bar)	Temp. Fluido (°C)	Temp. Amb. (°C)
da	1/8''	2.5	2.9	1	-30	-10
a	1/4''	4	5.3	30	140	50

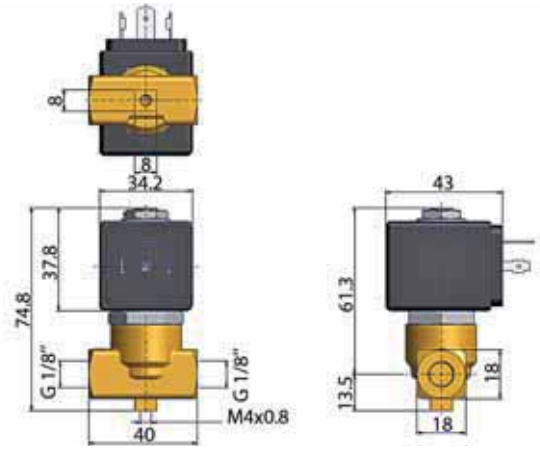

Disegno 025

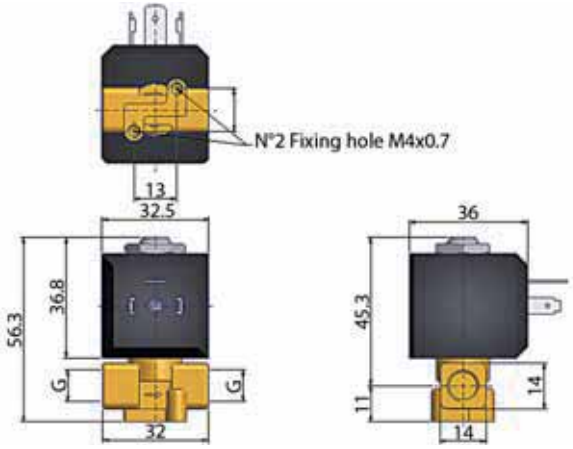

Disegno 013

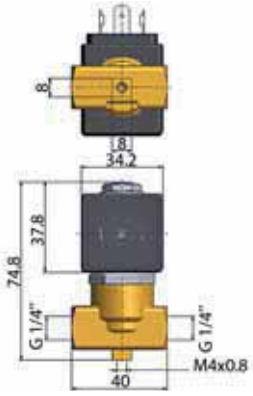

Disegno 026

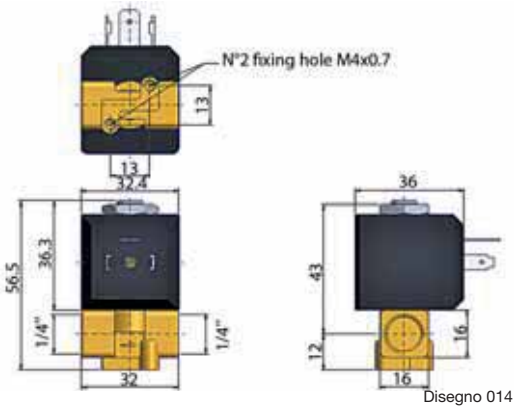

Disegno 014

2/2 VALVOLE PER BRUCIATORI

COMANDO DIRETTO

OTTONE
MONTAGGIO SU RACCORDI
NORMALMENTE CHIUSA

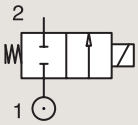

Raccordi	Orifizio Ø	Fattore portata			Pressione differenziale			Temp. Fluido		Tenuta	Valvola PARKER			Potenza		Gruppo Electtrico	Disegno nr.
					Min	Mass		Min	Mass								
BSP	mm	Kv l/min	KV m³/h	Qn m³/h	bar	AC bar	DC bar	°C	°C		Codice di Ordinazione	Modello valvola	Modello bobina	AC W	DC W		
1/4"	4	5.3	0.318	-	0	2	-	-10	140	FKM	**390705** [1]	**131.4GV**	**KT09** 230/50	9	-	22.0	014
	4	5.3	0.318	-	0	2	-	-10	140	FKM	**390650** [1]	**131.4GV**	**KT09** 24/50	9	-	22.0	014
	4	5.3	0.318	-	0	2	-	-10	140	FKM	**390718** [1]	**131.4GV**	**KT09** 240/50	9	-	22.0	014
	4	5.3	0.318	-	0	-	1	-10	140	FKM	**390720** [1]	**131.4GV**	**KT10** 12 DC	-	10	22.0	014
	4	5.3	0.318	-	0	-	1	-10	140	FKM	**390721** [1]	**131.4GV**	**KT10** 24 DC	-	10	22.0	014
3/8"	5	10	0.612	-	0	5	-	-10	140	FKM	**364010**	**PM153BV**	**ZB14**	14	-	20.2/22.0	037
	5	10	0.612	-	0	-	1.5	-10	140	FKM	**364010**	**PM153BV**	**ZB16**	-	16	20.2/22.0	037
1/2"	5	10	0.612	-	0	5	-	-10	140	FKM	**364035**	**PM153GV**	**ZB14**	14	-	20.2/22.0	037
	5	10	0.612	-	0	-	1.5	-10	140	FKM	**364035**	**PM153GV**	**ZB16**	-	16	20.2/22.0	037

Nota:

1. Codice di ordinazione legato a una valvola completa di bobina, con il voltaggio indicato.

In questa pagina	Raccordi	Orifizio (mm)	Kv (l/min)	Press. Diff. (bar)	Temp. Fluido (°C)	Temp. Amb. (°C)
da	1/4''	4	5.3	1	-10	-10
a	1/2''	5	10	5	140	50

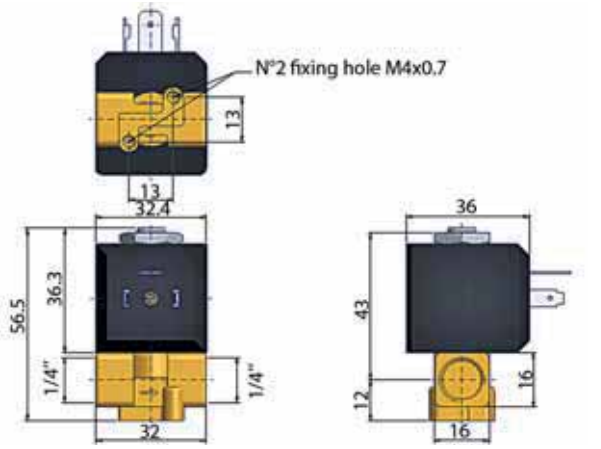

Disegno 014

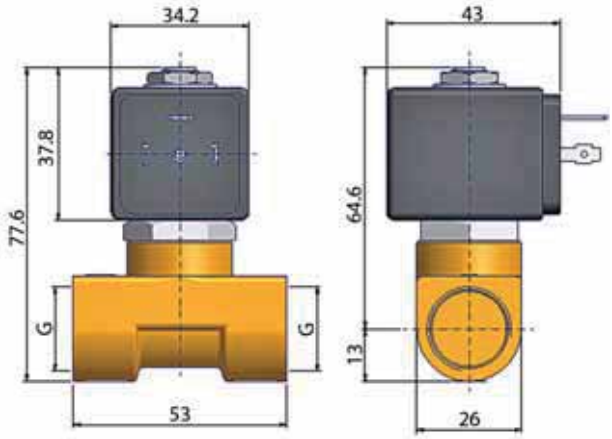

Disegno 037

2/2 VALVOLE PER BRUCIATORI

COMANDO DIRETTO

OTTONE
MONTAGGIO SU RACCORDI
NORMALMENTE CHIUSA

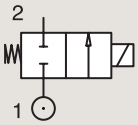

Raccordi	Orifizio Ø	Fattore Portata			Pressione differenziale			Temp. Fluido		Tenuta	Valvola PARKER LUCIFER®			Potenza		Gruppo Elettrico	Disegno nr.
					Min	Mass		Min	Mass		Valvola	Housing	Bobina				
BSP	mm	Kv l/min	KV m³/h	Qn l/min	bar	AC bar	DC bar	°C	°C					AC W	DC W		
1/8"	3	4	0.24	-	0	30	-	-30	160	Ruby	121K2423 [13]	8520,23	483824	19	-	14.1	3292
1/4"	3	4.5	0.27	-	0	30	-	-30	160	Ruby	121K6423 [13]	8520,23	483824	19	-	14.1	3292
	4	6.5	0.39	-	0	30	-	0	160	Ruby	121K6220 [13]	8520,23	483541	20	-	14.3	3510
3/8"	6	12	0.72	0	0	5	-	0	120	Ruby	121K3321	2995	492425	14	-	14.1	3551
	11	22	1.32	-	0	30	-	0	160	FKM	121G2320 [123]	8520,23	483541	20	-	14.3	3646
1/2"	14	25	1.5	-	0	30	-	0	160	FKM	121G2520 [123]	8520,23	483541	20	-	14.3	3646
	14	25	1.5	-	0	30	-	0	160	FKM	121G2523 [123]	8520,23	483824	19	-	14.1	3646

Nota:

1. Approvato DIN-EN-ISO23553-1(2009-10) per bruciatori
2. Pressione massima statica = 30 bar; pressione massima differenziale = 0,2 bar
3. Valvole compatibili unicamente con olio idraulico e liquidi neutri

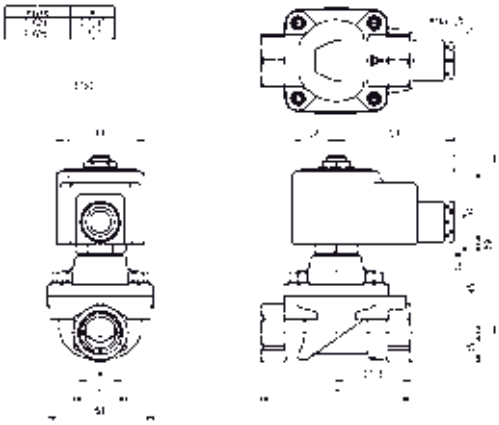

Disegno 3646

In questa pagina	Raccordi	Orifizio (mm)	Kv (l/min)	Press. Diff. (bar)	Temp. Fluido (°C)	Temp. Amb. (°C)
da	1/8"	3	4	5	-30	0
a	1/2"	14	25	30	160	60

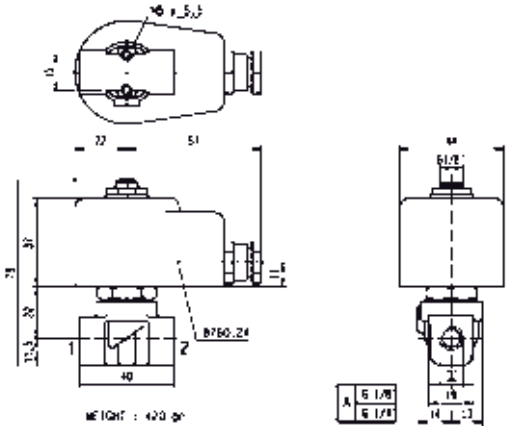

Disegno 3292

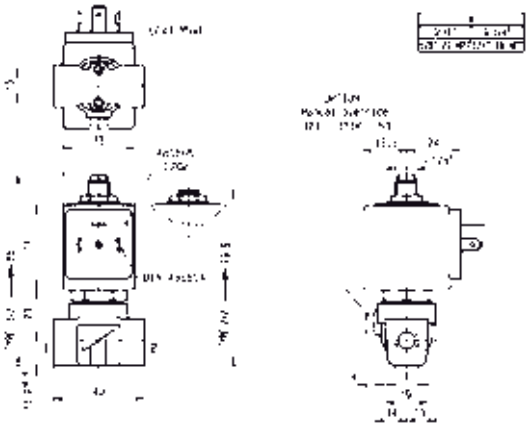

Disegno 3510

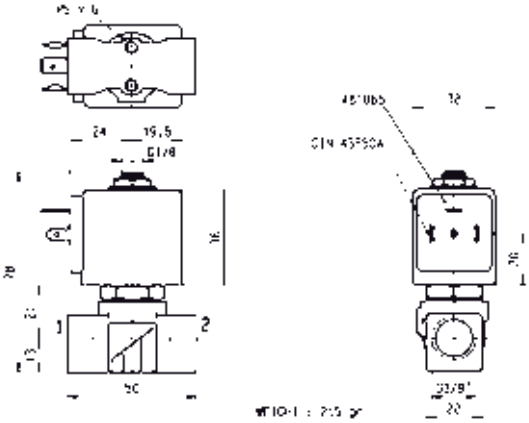

Disegno 3551

2/2 VALVOLE PER BRUCIATORI

COMANDO DIRETTO

OTTONE
MONTAGGIO SU RACCORDI
NORMALMENTE APERTA

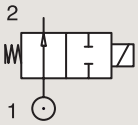

Raccordi	Orifizio Ø	Fattore portata			Pressione differenziale			Temp. Fluido		Tenuta	Valvola PARKER			Potenza		Gruppo Electtrico	Disegno nr.
					Min	Mass		Min	Mass								
BSP	mm	Kv l/min	KV m³/h	Qn m³/h	bar	AC bar	DC bar	°C	°C		Codice di Ordinazione	Modello valvola	Modello bobina	AC W	DC W		
1/8''	3	4	0.24	-	0	30	-	-30	160	Ruby	**360451J**	**PM120.4IR**	**ZB14**	14	-	20.2	001
	3	4	0.24	-	0	30	-	-30	160	Ruby	**360451J** [1]	**PM120.4IR**	**ZH14**	14	-	20.2	001
1/4''	3	4	0.24	-	0	30	-	-30	160	Ruby	**360452J**	**PM120.4AR**	**ZB14**	14	-	20.2	001
	3	4	0.24	-	0	30	-	-30	160	Ruby	**360452J** [1]	**PM120.4AR**	**ZH14**	14	-	20.2	001

Nota:

1. Approvato DIN-EN-ISO23553-1(2009-10) per bruciatori

In questa pagina	Raccordi	Orifizio (mm)	Kv (l/min)	Press. Diff. (bar)	Temp. Fluido (°C)	Temp. Amb. (°C)
da	1/8''	3	4	30	-30	-10
a	1/4''	3	4	30	160	50

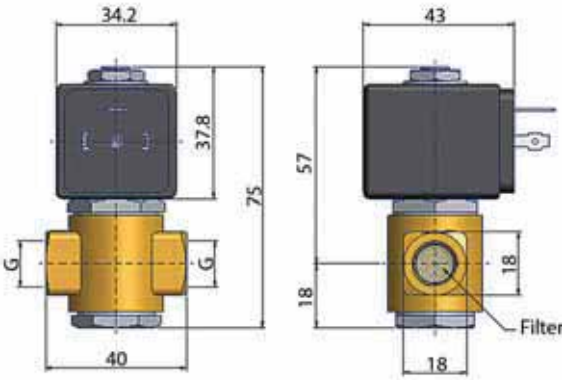

Disegno 001

2/2 VALVOLE PER BRUCIATORI

COMANDO DIRETTO

OTTONE
MONTAGGIO SU RACCORDI
NORMALMENTE APERTA

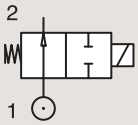

Raccordi	Orifizio Ø	Fattore Portata			Pressione differenziale			Temp. Fluido		Tenuta	Valvola PARKER LUCIFER®			Potenza		Gruppo Elettrico	Disegno nr.
					Min	Mass		Min	Mass		Valvola	Housing	Bobina				
BSP	mm	Kv l/min	KV m³/h	Qn l/min	bar	AC bar	DC bar	°C	°C					AC W	DC W		
1/8"	2.5	3.5	0.21	-	0	30	-	-30	160	Ruby	122K9321 [1]	8520,23	483824	19	-	14.1	6766
1/4"	2.5	3.5	0.21	-	0	30	-	-30	160	Ruby	122K8321 [1]	8520,23	483824	19	-	14.1	6766

Nota:

1. Approvato DIN-EN-ISO23553-1(2009-10) per bruciatori

OTTONE
MONTAGGIO SOTTOBASE
NORMALMENTE CHIUSA

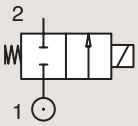

Raccordi	Orifizio Ø	Fattore Portata			Pressione differenziale			Temp. Fluido		Tenuta	Valvola PARKER LUCIFER®			Potenza		Gruppo Elettrico	Disegno nr.
					Min	Mass		Min	Mass		Valvola	Housing	Bobina				
	mm	Kv l/min	KV m³/h	Qn l/min	bar	AC bar	DC bar	°C	°C					AC W	DC W		
SB	14	25	1.5	-	0	30	-	0	160	FKM	121F2523 [1]	8520,23	483824	19	-	14.1	7638

Nota:

1. Approvato DIN-EN-ISO23553-1(2009-10) per bruciatori

In questa pagina	Raccordi	Orifizio (mm)	Kv (l/min)	Press. Diff. (bar)	Temp. Fluido (°C)	Temp. Amb. (°C)
da	1/8''	2.5	3.5	30	-30	0
a	14 mm	14	25	30	160	60

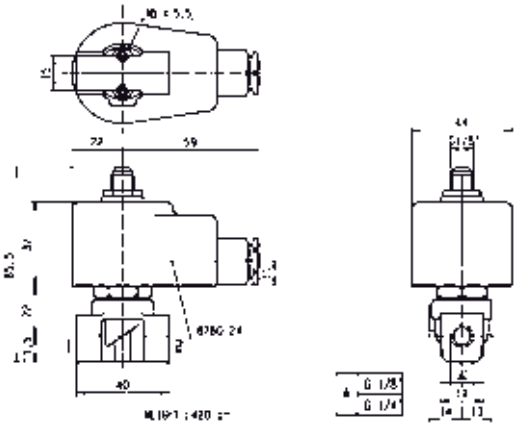

Disegno 6766

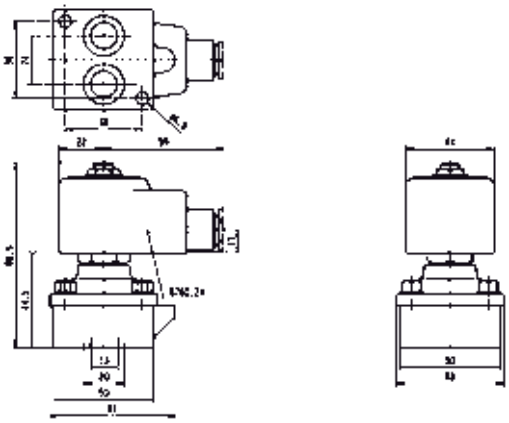

Disegno 7638

2/2 VALVOLE PER BRUCIATORI

MAGNALIFT

Sistemi di Riscaldamento

OTTONE
MONTAGGIO SU RACCORDI
NORMALMENTE CHIUSA

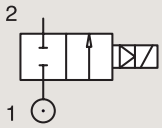

Raccordi	Orifizio Ø	Fattore Portata			Pressione differenziale			Temp. Fluido		Tenuta	Valvola PARKER LUCIFER®			Potenza		Gruppo Elettrico	Disegno nr.
					Min	Mass		Min	Mass		Valvola	Housing	Bobina				
BSP	mm	Kv l/min	KV m³/h	Qn l/min	bar	AC bar	DC bar	°C	°C					AC W	DC W		
1/2''	15	50	3	0	0	5	-	0	140	FKM	221G2523 [1]	8020.25	483824	19	-	14.1	8298

Nota:

1. Approvato DIN-EN-ISO23553-1(2009-10) per bruciatori

In questa pagina	Raccordi	Orifizio (mm)	Kv (l/min)	Press. Diff. (bar)	Temp. Fluido (°C)	Temp. Amb. (°C)
da	1/2''	15	50	5	0	0
a	1/2''	15	50	5	140	60

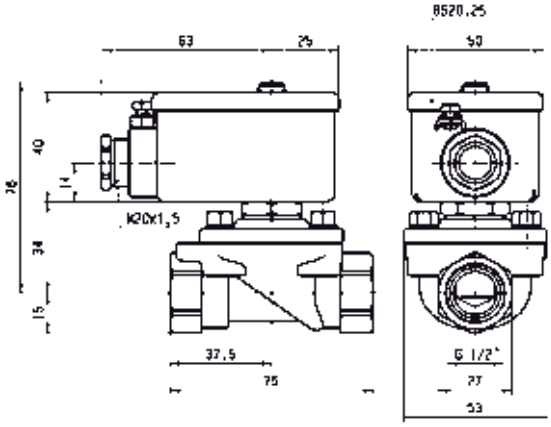

Disegno 8298

2/2 VALVOLE PER BRUCIATORI

SERVOPILOTATA

Impianti Commerciali

Impianti Industriali

Sistemi di Riscaldamento

OTTONE
MONTAGGIO SU RACCORDI
NORMALMENTE CHIUSA

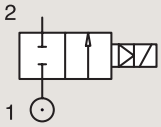

Raccordi	Orifizio Ø	Fattore Portata			Pressione differenziale			Temp. Fluido		Tenuta	Valvola PARKER LUCIFER®			Potenza		Gruppo Elettrico	Disegno nr.
					Min	Mass		Min	Mass		Valvola	Housing	Bobina				
BSP	mm	Kv l/min	KV m³/h	Qn l/min	bar	AC bar	DC bar	°C	°C					AC W	DC W		
1/4"	8	36	2.16	-	0.3	40	25	-10	100	FKM	E321H21 [234]	2995	481865	8	9	2.0	3523
	8	36	2.16	-	0.3	40	30	-10	120	FKM	E321H21 [234]	4270	481000	8	8	2.0	3523
	8	36	2.16	-	0.3	40	40	-10	140	FKM	E321H21 [234]	4270	486265	14	14	2.0	3523
3/8"	11	40	2.4	-	0.3	30	-	0	160	Ruby	321H2322 [14]	8520,23	483541	20	-	14.3	3633
	11	50	3	-	0.3	40	25	-10	100	FKM	E321H23 [234]	2995	481865	8	9	2.0	3521
	11	50	3	-	0.3	40	30	-10	120	FKM	E321H23 [234]	4270	481000	8	8	2.0	3521
	11	50	3	-	0.3	40	40	-10	140	FKM	E321H23 [234]	4270	486265	14	14	2.0	3521

Nota:

1. Approvato DIN-EN-ISO23553-1(2009-10) per bruciatori
2. Con selezionatore a 4 posizioni per controllo tempo di chiusura
3. Pilota con tenuta in Rubino sintetico
4. Pressione differenziale minima = 0,3 bar apertura e 0 bar chiusura

In questa pagina	Raccordi	Orifizio (mm)	Kv (l/min)	Press. Diff. (bar)	Temp. Fluido (°C)	Temp. Amb. (°C)
da	1/4"	8	36	25	-10	-10
a	3/8"	11	50	40	160	50

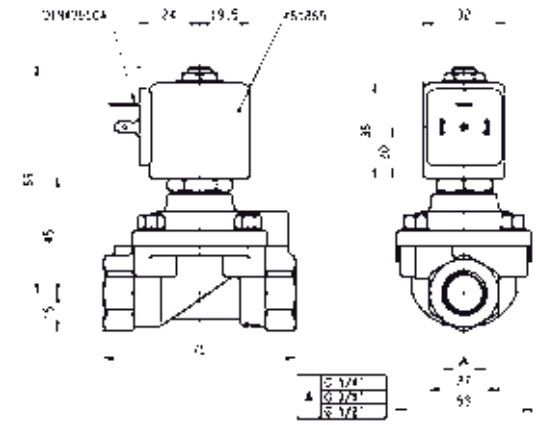

Disegno 3523

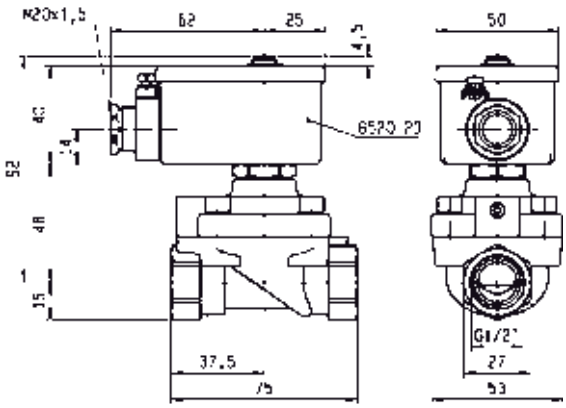

Disegno 3633

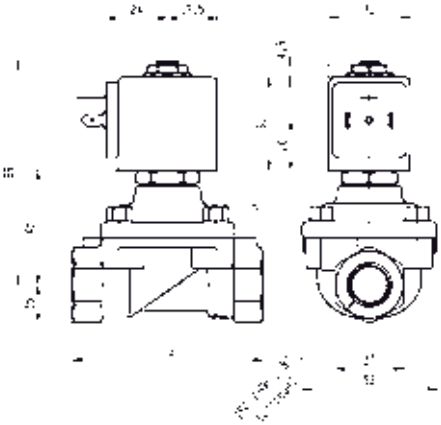

Disegno 3521

2/2 VALVOLE PER BRUCIATORI

SERVOPILOTATA

OTTONE
MONTAGGIO SU RACCORDI
NORMALMENTE CHIUSA

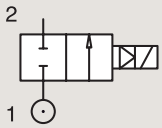

Raccordi	Orifizio Ø	Fattore Portata			Pressione differenziale			Temp. Fluido		Tenuta	Valvola PARKER LUCIFER®			Potenza		Gruppo Elettrico	Disegno nr.
					Min	Mass		Min	Mass		Valvola	Housing	Bobina				
BSP	mm	Kv l/min	KV m³/h	Qn l/min	bar	AC bar	DC bar	°C	°C					AC W	DC W		
1/2"	15	60	3.6	-	0.3	30	-	0	160	Ruby	**321H2522** [1]	**8520,23**	**483541**	20	-	14.3	3633
	15	60	3.6	-	0.3	30	-	0	160	Ruby	**321H2523** [1]	**8520,23**	**483824**	19	-	14.1	3633
	15	60	3.6	-	0.3	40	25	-10	100	FKM	**E321H25** [234]	**2995**	**481865**	8	9	2.0/14.2	3522
	15	60	3.6	-	0.3	40	30	-10	120	FKM	**E321H25** [234]	**-**	**483371**	8	8	2.0/14.2	3522
	15	60	3.6	-	0.3	40	40	-10	140	FKM	**E321H25** [234]	**4270**	**486265**	14	14	2.0/14.2	3522

Nota:

1. Approvato DIN-EN-ISO23553-1(2009-10) per bruciatori
2. Con selezionatore a 4 posizioni per controllo tempo di chiusura
3. Pilota con tenuta in Rubino sintetico
4. Pressione differenziale minima = 0,3 bar apertura e 0 bar chiusura

OTTONE
MONTAGGIO SOTTOBASE
NORMALMENTE CHIUSA

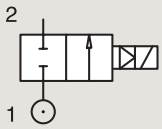

Raccordi	Orifizio Ø	Fattore Portata			Pressione differenziale			Temp. Fluido		Tenuta	Valvola PARKER LUCIFER®			Potenza		Gruppo Elettrico	Disegno nr.
					Min	Mass		Min	Mass		Valvola	Housing	Bobina				
	mm	Kv l/min	KV m³/h	Qn l/min	bar	AC bar	DC bar	°C	°C					AC W	DC W		
SB	14	45	2.7	-	0	30	-	0	160	FKM	**321F2523** [12]	**8520,23**	**483824**	19	-	14.1	7639

Nota:

1. Approvato DIN-EN-ISO23553-1(2009-10) per bruciatori
2. Pressione differenziale minima = 0,3 bar apertura e 0 bar chiusura

In questa pagina	Raccordi	Orifizio (mm)	Kv (l/min)	Press. Diff. (bar)	Temp. Fluido (°C)	Temp. Amb. (°C)
da	1/2"	14	45	25	-10	-10
a	14 mm	15	60	40	160	50

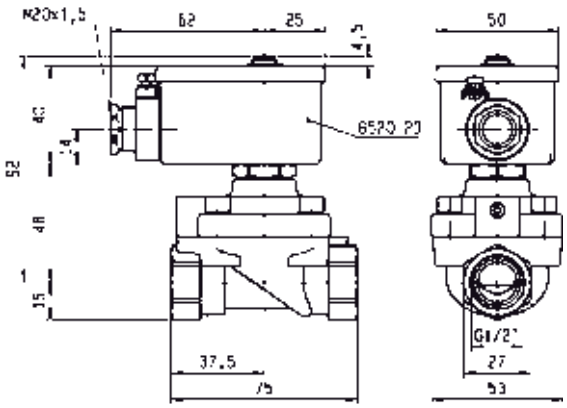

Disegno 3633

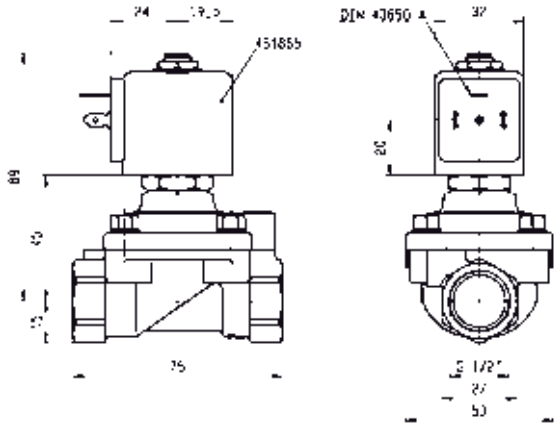

Disegno 3522

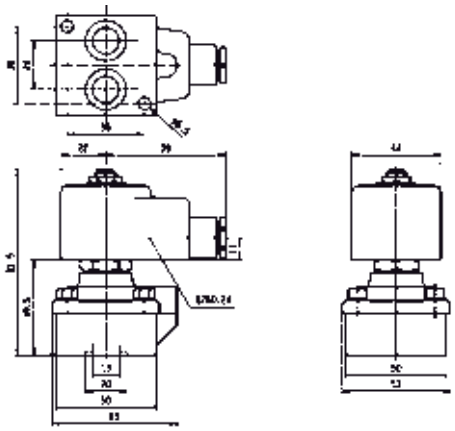

Disegno 7639

VALVOLE A COMMUTAZIONE RAPIDA

2/2

Azionamento	Corpo	Funzione	Raccordi	Orifizio (mm)	Fattore Portata	Pressione Differenziale Mass. (Bar)	Temp. Mass. Fluido	Pagina Elettrovalvola Parker	Pagina Elettrovalvola Parker LUCIFER®
Magnalift	Ottone/Raccordi	Normalmente chiusa	3/8''	8	0	7	40	-	198

2/2 VALVOLE A COMMUTAZIONE RAPIDA

MAGNALIFT

Impianti Industriali

OTTONE
MONTAGGIO SU RACCORDI
NORMALMENTE CHIUSA

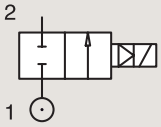

Raccordi	Orifizio Ø	Fattore Portata			Pressione differenziale			Temp. Fluido		Tenuta	Valvola PARKER LUCIFER®			Potenza		Gruppo Elettrico	Disegno nr.
					Min	Mass		Min	Mass		Valvola	Housing	Bobina				
BSP	mm	Kv l/min	KV m³/h	Qn l/min	bar	AC bar	DC bar	°C	°C					AC W	DC W		
3/8''	8	-	-	-	0	-	7	0	40	PUR	221J3301E [1]	2995,6	483816	-	14		8020

Nota:

1. Per ulteriori dettagli consultare il catalogo 8674IT

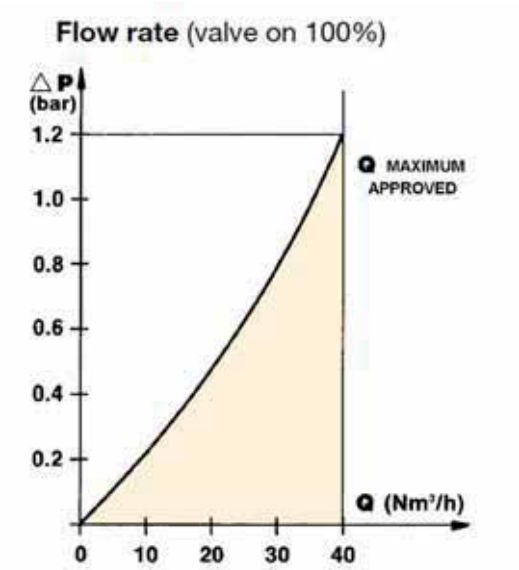

In questa pagina	Raccordi	Orifizio (mm)	Kv (l/min)	Press. Diff. (bar)	Temp. Fluido (°C)	Temp. Amb. (°C)
da	3/8''	8	-	7	0	0
a	3/8''	8	-	7	40	50

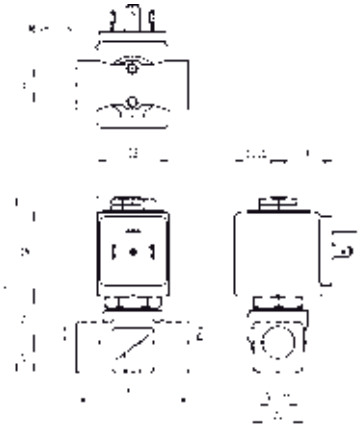

Disegno 8020

VALVOLE PER DISTRIBUTORI DI BEVANDE - LIQUIPURE®

Vapore

Acqua

2/2

Azionamento	Corpo	Funzione	Raccordi	Orifizio (mm)	Fattore Portata	Pressione Differenziale Mass. (Bar)	Temp. Mass. Fluido	Pagina Elettrovalvola Parker
Comando diretto	AISI305/Sottobase	Normalmente chiusa	SB	1.5 a 3	4.2	20	-	202

2/2 VALVOLE PER DISTRIBUTORI DI BEVANDE - LIQUIPURE®

COMANDO DIRETTO

Erogazione di Bevande

Medicale / Strumentazione

AISI

MONTAGGIO SOTTOBASE

NORMALMENTE CHIUSA

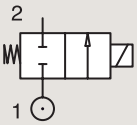

Raccordi	Orifizio Ø	Fattore Portata			Pressione differenziale			Temp. Fluido		Tenuta	Valvola PARKER			Potenza		Gruppo Elettrico	Disegno nr.
					Min	Mass		Min	Mass		Valvola	Housing	Bobina				
	mm	Kv l/min	KV m³/h	Qn l/min	bar	AC bar	DC bar	°C	°C					AC W	DC W		
SB	1.5	1.3	0.08	-	0	20	20	-10	140	Ruby	**2019F1GRG7**	-	**D4**	13	16	24.0	071
	1.5	1.3	0.08	-	0	20	20	-10	140	Ruby	**2019F1GRG7**	-	**D5**	8	9	24.0	071
	1.5	1.3	0.08	-	0	20	20	-10	140	Ruby	**2019F1GRG7**	-	**LA**	9	9	24.0	071
	1.5	1.3	0.08	-	0	20	20	-10	140	Ruby	**2019F1GRG7**	-	**LB-LC**	13	16	24.0	071
	1.5	1.3	0.08	-	0	20	-	-10	140	Ruby	**2019F1GRG7**	-	**XS03**	9	-	24.0	071
	1.5	1.3	0.08	-	0	20	20	-10	140	FDA FKM	**2019F1GVG7**	-	**D4**	13	16	24.0	071
	1.5	1.3	0.08	-	0	20	20	-10	140	FDA FKM	**2019F1GVG7**	-	**D5**	8	9	24.0	071
	1.5	1.3	0.08	-	0	20	20	-10	140	FDA FKM	**2019F1GVG7**	-	**LA**	9	9	24.0	071
	1.5	1.3	0.08	-	0	20	20	-10	140	FDA FKM	**2019F1GVG7**	-	**LB-LC**	13	16	24.0	071
	1.5	1.3	0.08	-	0	20	-	-10	140	FDA FKM	**2019F1GVG7**	-	**XS03**	9	-	24.0	071
	2	2.3	0.14	-	0	15	15	-10	140	Ruby	**2019F1JRG7**	-	**D4**	13	16	24.0	071
	2	2.3	0.14	-	0	15	15	-10	140	Ruby	**2019F1JRG7**	-	**D5**	8	9	24.0	071
	2	2.3	0.14	-	0	15	15	-10	140	Ruby	**2019F1JRG7**	-	**LA**	9	9	24.0	071
	2	2.3	0.14	-	0	15	15	-10	140	Ruby	**2019F1JRG7**	-	**LB-LC**	13	16	24.0	071
	2	2.3	0.14	-	0	15	-	-10	140	Ruby	**2019F1JRG7**	-	**XS03**	9	-	24.0	071
	2	2.3	0.14	-	0	15	15	-10	140	FDA FKM	**2019F1JVG7**	-	**D4**	13	16	24.0	071
	2	2.3	0.14	-	0	15	15	-10	140	FDA FKM	**2019F1JVG7**	-	**D5**	8	9	24.0	071
	2	2.3	0.14	-	0	15	15	-10	140	FDA FKM	**2019F1JVG7**	-	**LA**	9	9	24.0	071
	2	2.3	0.14	-	0	15	15	-10	140	FDA FKM	**2019F1JVG7**	-	**LB-LC**	13	16	24.0	071
	2	2.3	0.14	-	0	15	-	-10	140	FDA FKM	**2019F1JVG7**	-	**XS03**	9	-	24.0	071
	2.5	3.2	0.19	-	0	10	10	-10	140	Ruby	**2019F1LRG7**	-	**D4**	13	16	24.0	071
	2.5	3.2	0.19	-	0	10	10	-10	140	Ruby	**2019F1LRG7**	-	**D5**	8	9	24.0	071
	2.5	3.2	0.19	-	0	10	10	-10	140	Ruby	**2019F1LRG7**	-	**LA**	9	9	24.0	071
	2.5	3.2	0.19	-	0	10	10	-10	140	Ruby	**2019F1LRG7**	-	**LB-LC**	13	16	24.0	071

In questa pagina	Raccordi	Orifizio (mm)	Kv (l/min)	Press. Diff. (bar)	Temp. Fluido (°C)	Temp. Amb. (°C)
da	SB	1.5	1.3	10	-10	-10
a	SB	2.5	3.2	20	140	50

Disegno 071

2/2 VALVOLE PER DISTRIBUTORI DI BEVANDE - LIQUIPURE®

COMANDO DIRETTO

AISI

MONTAGGIO SOTTOBASE

NORMALMENTE CHIUSA

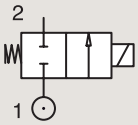

Raccordi	Orifizio Ø	Fattore Portata			Pressione differenziale			Temp. Fluido		Tenuta	Valvola PARKER			Potenza		Gruppo Elettrico	Disegno nr.
					Min	Mass		Min	Mass		Valvola	Housing	Bobina				
	mm	Kv l/min	KV m³/h	Qn l/min	bar	AC bar	DC bar	°C	°C					AC W	DC W		
SB	2.5	3.2	0.19	-	0	10	-	-10	140	Ruby	**2019F1LRG7**	**-**	**XS03**	9	-	24.0	071
	2.5	3.2	0.19	-	0	10	10	-10	140	FDA FKM	**2019F1LVG7**	**-**	**D4**	13	16	24.0	071
	2.5	3.2	0.19	-	0	10	10	-10	140	FDA FKM	**2019F1LVG7**	**-**	**D5**	8	9	24.0	071
	2.5	3.2	0.19	-	0	10	10	-10	140	FDA FKM	**2019F1LVG7**	**-**	**LA**	9	9	24.0	071
	2.5	3.2	0.19	-	0	10	10	-10	140	FDA FKM	**2019F1LVG7**	**-**	**LB-LC**	13	16	24.0	071
	2.5	3.2	0.19	-	0	10	-	-10	140	FDA FKM	**2019F1LVG7**	**-**	**XS03**	9	-	24.0	071
	3	4.2	0.25	-	0	7	7	-10	140	Ruby	**2019F1NRG7**	**-**	**D4**	13	16	24.0	071
	3	4.2	0.25	-	0	7	7	-10	140	Ruby	**2019F1NRG7**	**-**	**D5**	8	9	24.0	071
	3	4.2	0.25	-	0	7	7	-10	140	Ruby	**2019F1NRG7**	**-**	**LA**	9	9	24.0	071
	3	4.2	0.25	-	0	7	7	-10	140	Ruby	**2019F1NRG7**	**-**	**LB-LC**	13	16	24.0	071
	3	4.2	0.25	-	0	7	-	-10	140	Ruby	**2019F1NRG7**	**-**	**XS03**	9	-	24.0	071
	3	4.2	0.25	-	0	7	7	-10	140	FDA FKM	**2019F1NVG7**	**-**	**D4**	13	16	24.0	071
	3	4.2	0.25	-	0	7	7	-10	140	FDA FKM	**2019F1NVG7**	**-**	**D5**	8	9	24.0	071
	3	4.2	0.25	-	0	7	7	-10	140	FDA FKM	**2019F1NVG7**	**-**	**LA**	9	9	24.0	071
	3	4.2	0.25	-	0	7	7	-10	140	FDA FKM	**2019F1NVG7**	**-**	**LB-LC**	13	16	24.0	071
	3	4.2	0.25	-	0	7	-	-10	140	FDA FKM	**2019F1NVG7**	**-**	**XS03**	9	-	24.0	071

In questa pagina	Raccordi	Orifizio (mm)	Kv (l/min)	Press. Diff. (bar)	Temp. Fluido (°C)	Temp. Amb. (°C)
da	SB	2.5	3.2	7	-10	-10
a	SB	3	4.2	10	140	50

Disegno 071

VALVOLE PER ARIA SECCA O LUBRIFICATA, GAS NEUTRI E LIQUIDI

Olio Acqua Aria

3/2

Azionamento	Corpo	Funzione	Raccordi	Orifizio (mm)	Fattore Portata	Pressione Differenziale Mass. (Bar)	Temp. Mass. Fluido	Pagina Elettrovalvola Parker	Pagina Elettrovalvola Parker LUCIFER®
Comando diretto	Ottone/Raccordi	Normalmente chiusa	1/8''	1.2 a 2.5	3.5	20	140	208	
			1/8''-1/4''	2.5	3.5	7	75	-	210
			1/4''	1 a 4.5	7	30	140	208	
		Normalmente aperta	1/4''	1.5 a 3	4.5	16	120	-	218
		Universale	1/8''	1.5 a 2.5	3.5	10	140	220	
			1/4''	0.8 a 3.5	5	30	140	220	
		Controllo con impulsi elettrici	1/4''	1.5	1.5	16	100	-	224
	Ottone/Sottobase	Normalmente chiusa	SB	1.3	1	20	140	226	-
			3.5 mm	1.2 a 1.5	0.9	10	75	-	228
			5 mm	1 a 2.5	3.5	16	120	-	228
		Normalmente aperta	5 mm	1.5 a 2.5	2.2	15	120	-	230
		Universale	1/8''-1/5''	1.5	1.5	10	120	-	232
			5 mm	1.5 a 2.5	3.5	10	120	-	232
	Alluminio anodizzato/ Banjo	Normalmente chiusa	1/8''	1.2	-	10	50	-	234
	AISI303/Sottobase	Normalmente chiusa	5 mm	1.5	1.5	15	100	-	236
		Normalmente chiusa	3 mm	2	2	10	50	-	238
Servopilotata	Alluminio anodizzato/ Raccordi	Normalmente chiusa	1/4''	6.5 a 8	20	15	75	-	240
			1/2''	14	-	15	75	-	242
		Normalmente aperta	1/4''	8	20	40	75	-	242
			1/2''	14	-	15	100	-	244
	Alluminio anodizzato/ montaggio sottobase/ Poppet	Normalmente chiusa	1/2''	15	-	10	75	-	244

3/2 VALVOLE PER ARIA SECCA O LUBRIFICATA, GAS NEUTRI E LIQUIDI
COMANDO DIRETTO

Impianti Industriali

Impianti Commerciali

Medicale / Strumentazione

OTTONE
MONTAGGIO SU RACCORDI
NORMALMENTE CHIUSA

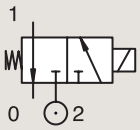

Raccordi	Orifizio Ø		Fattore Portata				Pressione differenziale			Temp. Fluido		Tenuta	Valvola PARKER			Potenza		Gruppo Elettrico	Disegno nr.
	1	(2)	1	(2)	1	(2)	Min	Mass		Min	Mass		Codice di ordinazione	Modello valvola	Modello bobina	AC W	DC W		
BSP	mm		Kv l/min		KV m³/h		bar	AC bar	DC bar	°C	°C								
1/8"	1.2	1.6	0.7	-	0.04	-	0	8	-	-10	140	FKM	398102 [1]	N79.4IV	WB4.5 115/50-60	4.5	-	1.3	066
	1.2	1.6	0.7	-	0.04	-	0	14	-	-10	140	FKM	398104 [1]	N79.4IV	WB4.5 230/50-60	4.5	-	1.3	066
	1.2	1.6	0.7	-	0.04	-	0	14	-	-10	140	FKM	398120 [1]	N79.4IV	WB4.5 24/50-60	4.5	-	1.3	066
	1.2	1.6	0.7	-	0.04	-	0	14	-	-10	140	FKM	398100 [1]	N79.4IV	WB4.5 42/50-60	4.5	-	1.3	066
	1.5	1.6	1	-	0.06	-	0	8	-	-10	140	FKM	398112 [1]	N79.4AV	WB4.5 230/50-60	4.5	-	1.3	066
	1.5	1.6	1	-	0.06	-	0	8	-	-10	140	FKM	398122 [1]	N79.4AV	WB4.5 24/50-60	4.5	-	1.3	066
	1.5	1.6	1	-	0.06	-	0	8	-	-10	140	FKM	398138 [1]	N79.6AV	WB4.5 115/50-60	4.5	-	1.3	080
	1.5	1.6	1	-	0.06	-	0	8	-	-10	140	FKM	398130U [1]	N79.6AV	WB4.5 115/60	4.5	-	1.3	080
	1.5	1.6	1	-	0.06	-	0	8	-	-10	140	FKM	398114 [1]	N79.6AV	WB4.5 230/50-60	4.5	-	1.3	080
	1.5	1.6	1	-	0.06	-	0	8	-	-10	140	FKM	398142 [1]	N79.6AV	WB4.5 240/50-60	4.5	-	1.3	080
	1.5	1.5	1.2	-	0.07	-	0	20	-	-10	140	FKM	362560J	PM141AV	ZB09	9	-	20.1/20.2	029
	2	1.6	1.5	-	0.09	-	0	5	-	-10	140	FKM	398134U [1]	N79.6BV	WB4.5 115/60	4.5	-	1.3	080
	2	1.6	1.5	-	0.09	-	0	5	-	-10	140	FKM	398136U [1]	N79.6BV	WB4.5 208-240/60	4.5	-	1.3	080
	2	1.6	1.5	-	0.09	-	0	5	-	-10	140	FKM	398132 [1]	N79.6BV	WB4.5 230/50-60	4.5	-	1.3	080
	2	2.5	2	-	0.12	-	0	15	-	-10	140	FKM	362570J	PM141BV	ZB09	9	-	20.1/20.2	029
1/4"	2	2.5	2	-	0.12	-	0	15	-	-10	140	FKM	362620J	PM141FV	ZB09	9	-	20.1/20.2	033
	2.5	2.5	2.8	-	0.17	-	0	9	-	-10	140	FKM	362630J	PM141GV	ZB09	9	-	20.1/20.2	033

Nota:

1. Codice di ordinazione legato a una valvola completa di bobina, con il voltaggio indicato.

In questa pagina	Raccordi	Orifizio (mm)	Kv (l/min)	Press. Diff. (bar)	Temp. Fluido (°C)	Temp. Amb. (°C)
da	1/8''	1.2	0.7	5	-10	-10
a	1/4''	2.5	2.8	20	140	50

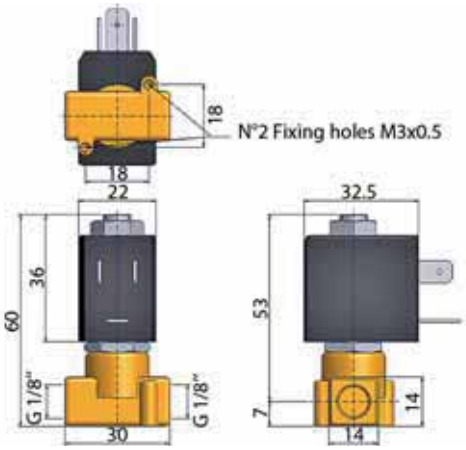

Disegno 066

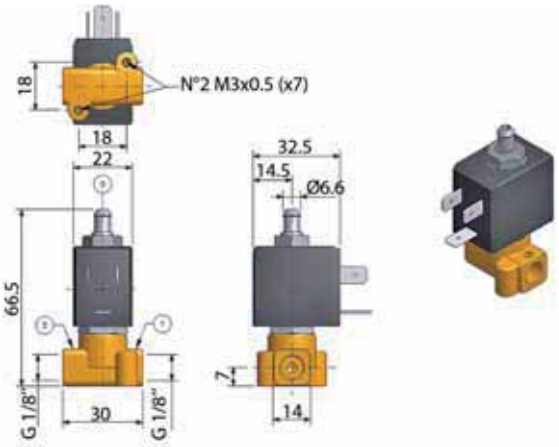

Disegno 080

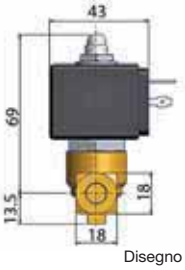

Disegno 029

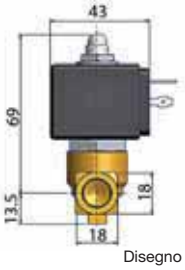

Disegno 033

3/2 VALVOLE PER ARIA SECCA O LUBRIFICATA, GAS NEUTRI E LIQUIDI

COMANDO DIRETTO

OTTONE
MONTAGGIO SU RACCORDI
NORMALMENTE CHIUSA

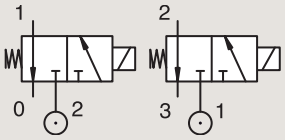

Raccordi	Orifizio Ø		Fattore portata				Pressione differenziale			Temp. Fluido		Tenuta	Valvola PARKER LUCIFER®			IS	Potenza		Gruppo Elettrico	Disegno nr.
	1	(2)	1	(2)	1	(2)	Min	Mass		Min	Mass		Valvola	Housing	Bobina					
BSP	mm		Kv l/min		KV m³/h		bar	AC bar	DC bar	°C	°C						AC W	DC W		
1/8"	1.2	1.5	0.7	0.9	0.042	0.054	0	10	10	-10	75	FKM	**131M15**	**8993**	**488980**		2	2.5	1.1	3382
	1.5	1.5	0.9	0.9	0.054	0.054	0	7	7	-10	75	FKM	**131M14**	**8993**	**488980**		2	2.5	1.1	3382
	1.5	1.5	1.5	1.5	0.09	0.09	0	15	15	-10	120	FKM	**E131K14**	**4270**	**481000**		8	8	2.1	3510
	1.5	1.5	1.5	1.5	0.09	0.09	0	15	15	-10	100	FKM	**E131K14**	**2995**	**481865**		8	9	2.1	3510
	2	2.5	2.5	3.5	0.15	0.21	0	10	10	-10	120	FKM	**131K16**	**4270**	**481000**		8	8	2.1	3510
	2	2.5	2.5	3.5	0.15	0.21	0	10	10	-10	100	FKM	**131K16**	**2995**	**481865**		8	9	2.1	3510
	2	2.5	2.5	3.5	0.15	0.21	0	10	10	-10	120	FKM	**131K1650**[1]	**4270**	**481000**		8	8	2.1	3510
	2	2.5	2.5	3.5	0.15	0.21	0	10	10	-10	100	FKM	**131K1650**[1]	**2995**	**481865**		8	9	2.1	3510
	2.5	2.5	3.5	3.5	0.21	0.21	0	7	7	-10	120	FKM	**E131K13**	**4270**	**481000**		8	8	2.0	3510
	2.5	2.5	3.5	3.5	0.21	0.21	0	7	7	-10	100	FKM	**E131K13**	**2995**	**481865**		8	9	2.0	3510
	2.5	2.5	3.5	3.5	0.21	0.21	0	7	7	-10	100	FKM	**E131K13**	**4270**	**486265**		14	14	2.0	3510
1/8"-1/4"	2.5	2.5	3	3	0.18	0.18	0	-	2	-20	75	PUR	**131K0397**	**2995**	**482740**		-	1.6	6.0/8.0	8023
	2.5	2.5	3	3	0.18	0.18	0	2	2	-20	75	PUR	**131K0397**	**-**	**495900**		2.5	2	6.0/8.0	8023
	2.5	2.5	3	3	0.18	0.18	0	-	2	-20	75	PUR	**131K0397**	**-**	**495910**	*	-	0.3 to 3	6.0/8.0	8023
	2.5	2.5	3.5	3.5	0.21	0.21	0	7	7	-40	75	PUR	**E131K0358**[1]	**4270**	**481000**		8	8	2.1	3510
	2.5	2.5	3.5	3.5	0.21	0.21	0	7	7	-40	75	PUR	**E131K0358**[1]	**2995**	**481865**		8	9	2.1	3510
1/4"	1	1	0.6	0.6	0.036	0.036	0	-	10	-10	55	FKM	**131K0490**	**2995**	**483580,01**	*	-	0.5 to 3	7.0/8.0.0	7058
	1	1	0.6	0.6	0.036	0.036	0	-	10	-10	75	FKM	**131K0490**	**-**	**488660,01**	*	-	0.3 to 3	77.0/8.00	7058
	1	1	0.6	-	0.036	-	0	-	10	-10	75	FKM	**131K0490**	**-**	**495910**	*	-	0.3 to 3	7.7.0/8.0	7058

Nota:

1. Con comando manuale

Disegno 7058

In questa pagina	Raccordi	Orifizio (mm)	Kv (l/min)	Press. Diff. (bar)	Temp. Fluido (°C)	Temp. Amb. (°C)
da	1/8"	1	0.6	2	-40	-40
a	1/4"	2.5	3.5	15	120	50

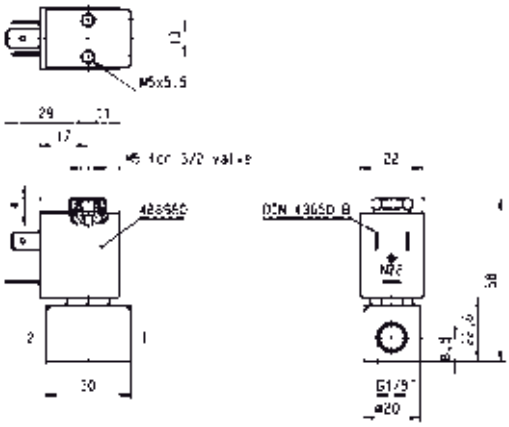

Disegno 3382

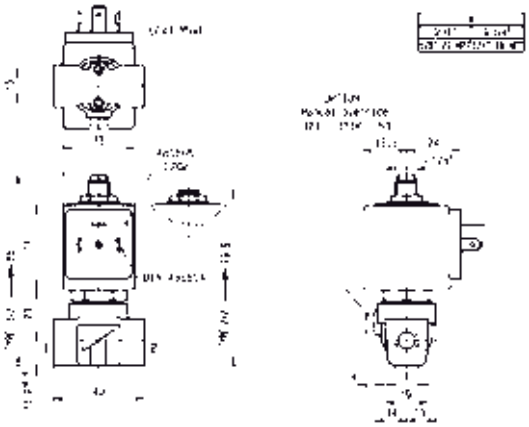

Disegno 3510

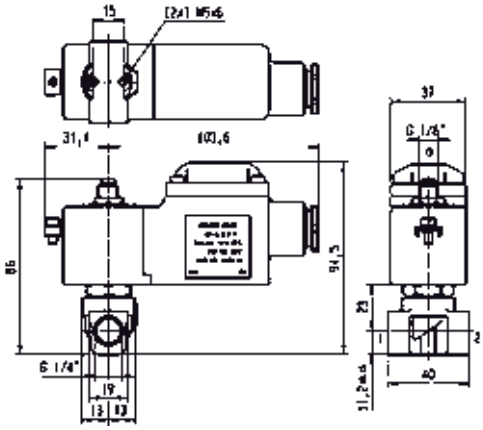

Disegno 8023

3/2 VALVOLE PER ARIA SECCA O LUBRIFICATA, GAS NEUTRI E LIQUIDI
COMANDO DIRETTO

OTTONE
MONTAGGIO SU RACCORDI
NORMALMENTE CHIUSA

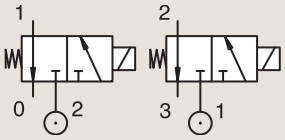

Raccordi	Orifizio Ø		Fattore portata				Pressione differenziale			Temp. Fluido		Tenuta	Valvola PARKER LUCIFER®			IS	Potenza		Gruppo Elettrico	Disegno nr.
	1	(2)	1	(2)	1	(2)	Min	Mass		Min	Mass		Valvola	Housing	Bobina					
BSP	mm		Kv l/min		KV m³/h		bar	AC bar	DC bar	°C	°C						AC W	DC W		
1/4"	1.2	1.5	0.8	1.5	0.048	0.09	0	30	-	-30	130	Ruby	**E131K64**	**4270**	**481000**		8	-	2.0	3510
	1.2	1.5	0.8	1.5	0.048	0.09	0	30	30	-30	140	Ruby	**E131K64**	**4270**	**486265**		14	14	2.0	3510
	1.2	1.5	0.8	1.5	0.048	0.09	0	30	-	-30	130	Ruby	**E131K6450** [1]	**4270**	**481000**		8	-	2.0	3510
	1.2	1.5	0.8	1.5	0.048	0.09	0	30	30	-30	140	Ruby	**E131K6450** [1]	**4270**	**486265**		14	14	2.0	3510
	1.5	1.5	1.5	1.5	0.09	0.09	0	-	7	-20	75	PUR	**131K0497**	**2995**	**482740**		-	1.6	6.0/8.0	8023
	1.5	1.5	1.5	1.5	0.09	0.09	0	7	7	-20	75	PUR	**131K0497**	**-**	**495900**		2.5	2	6.0/8.0	8023
	1.5	1.5	1.5	1.5	0.09	0.09	0	-	7	-20	75	PUR	**131K0497**	**-**	**495910**	*	-	0.3 to 3	6.0/8.0	8023
	1.5	1.5	1.5	1.5	0.09	0.09	0	-	7	-20	75	PUR	**131K0497**	**2995**	**496125**		-	1.6	6.0/8.0	8023
	1.5	1.5	1.5	1.5	0.09	0.09	0	16	16	-10	120	FKM	**E131K04**	**4270**	**481000**		8	8	2.0	3510
	1.5	1.5	1.5	1.5	0.09	0.09	0	16	16	-10	100	FKM	**E131K04**	**2995**	**481865**		8	9	2.0	3510
	1.5	1.5	1.5	1.5	0.09	0.09	0	16	16	-10	120	FKM	**E131K04**	**4270**	**486265**		14	14	2.0	3510
	1.5	1.5	1.5	1.5	0.09	0.09	0	15	15	-10	120	FKM	**E131K0450** [1]	**4270**	**481000**		8	8	2.1	3510
	1.5	1.5	1.5	1.5	0.09	0.09	0	15	15	-10	100	FKM	**E131K0450** [1]	**2995**	**481865**		8	9	2.1	3510
	2	3	2.5	4.5	0.15	0.27	0	10	10	-10	75	FKM	**131T23**	**4270**	**481000**		8	8	2.0	3223
	2	3	2.5	4.5	0.15	0.27	0	10	10	-10	75	FKM	**131T23**	**2995**	**481865**		8	9	2.0	3223
	2	3	2.5	4.5	0.15	0.27	0	10	10	-10	75	FKM	**131T23**	**4270**	**486265**		14	14	2.0	3223
	2	3	2.5	4.5	0.15	0.27	0	10	10	-10	75	FKM	**131T2301** [1]	**4270**	**481000**		8	8	2.0	3223
	2	3	2.5	4.5	0.15	0.27	0	10	10	-10	75	FKM	**131T2301** [1]	**2995**	**481865**		8	9	2.0	3223
	2	3	2.5	4.5	0.15	0.27	0	10	10	-10	75	FKM	**131T2301** [1]	**4270**	**486265**		14	14	2.0	3223

Nota:

1. Con comando manuale

In questa pagina	Raccordi	Orifizio (mm)	Kv (l/min)	Press. Diff. (bar)	Temp. Fluido (°C)	Temp. Amb. (°C)
da	1/4"	1.2	0.8	7	-30	-20
a	1/4"	2	2.5	30	140	50

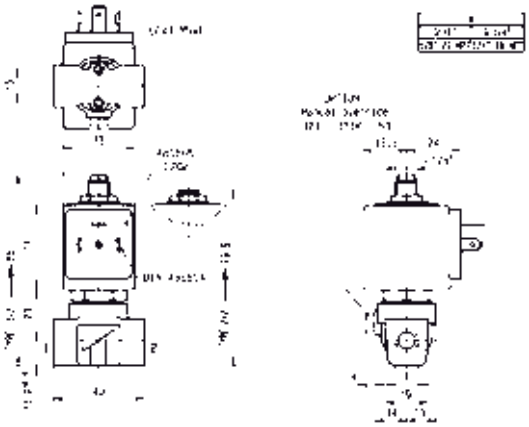

Disegno 3510

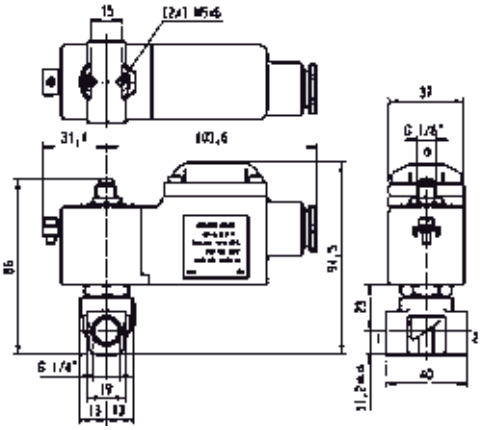

Disegno 8023

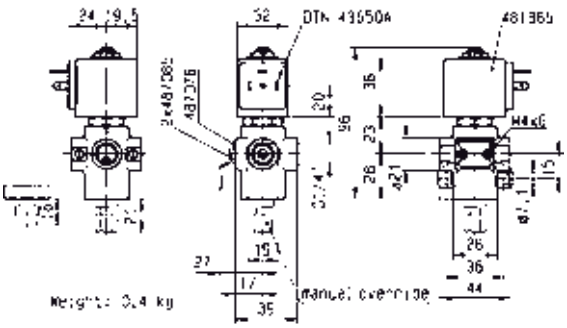

Disegno 3223

3/2 VALVOLE PER ARIA SECCA O LUBRIFICATA, GAS NEUTRI E LIQUIDI
COMANDO DIRETTO

OTTONE
MONTAGGIO SU RACCORDI
NORMALMENTE CHIUSA

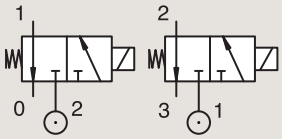

Raccordi	Orifizio Ø		Fattore portata				Pressione differenziale			Temp. Fluido		Tenuta	Valvola PARKER LUCIFER®			Potenza		Gruppo Elettrico	Disegno nr.
	1	(2)	1	(2)	1	(2)	Min	Mass		Min	Mass		Valvola	Housing	Bobina				
BSP	mm		Kv l/min		KV m³/h		bar	AC bar	DC bar	°C	°C					AC W	DC W		
1/4"	2	2.5	2.5	3.5	0.15	0.21	0	10	10	-10	120	FKM	**E131K06**	**4270**	**481000**	8	8	2.0	8119
	2	2.5	2.5	3.5	0.15	0.21	0	10	10	-10	100	FKM	**E131K06**	**2995**	**481865**	8	9	2.0	8119
	2	2.5	2.5	3.5	0.15	0.21	0	10	10	-10	120	FKM	**E131K06**	**4270**	**486265**	14	14	2.0	8119
	2	2.5	2.5	3.5	0.15	0.21	0	10	10	-10	120	FKM	**E131K0650** [1]	**4270**	**481000**	8	8	2.1	3510
	2	2.5	2.5	3.5	0.15	0.21	0	10	10	-10	100	FKM	**E131K0650** [1]	**2995**	**481865**	8	9	2.1	3510
	2.5	2.5	3	3	0.18	0.18	0	-	2	-20	75	PUR	**131K0397**	**2995**	**496125**	-	1.6	6.0/8.0	8023
	2.5	3.5	3.5	5.5	0.21	0.33	0	7	7	-10	75	FKM	**131T29**	**4270**	**481000**	8	8	2.1	3223
	2.5	3.5	3.5	5.5	0.21	0.33	0	7	7	-10	75	FKM	**131T29**	**2995**	**481865**	8	9	2.1	3223
	2.5	3.5	3.5	5.5	0.21	0.33	0	7	7	-10	75	FKM	**131T2901** [1]	**4270**	**481000**	8	8	2.1	3223
	2.5	3.5	3.5	5.5	0.21	0.33	0	7	7	-10	75	FKM	**131T2901** [1]	**2995**	**481865**	8	9	2.1	3223

Nota:

1. Con comando manuale

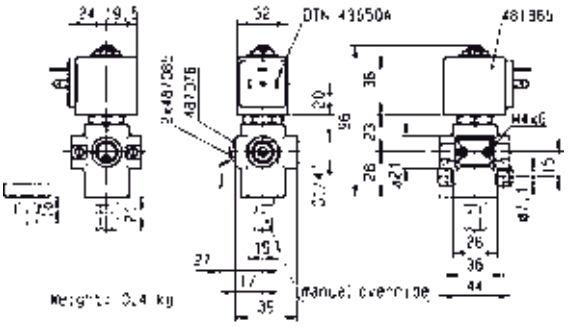

Disegno 3223

In questa pagina	Raccordi	Orifizio (mm)	Kv (l/min)	Press. Diff. (bar)	Temp. Fluido (°C)	Temp. Amb. (°C)
da	1/4"	2	2.5	2	-20	-20
a	1/4"	2.5	3.5	10	120	50

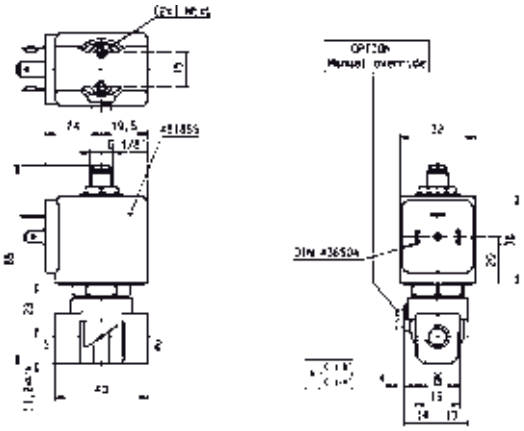

Disegno 8119

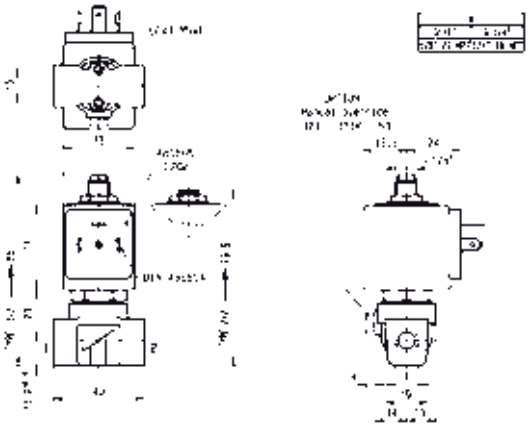

Disegno 3510

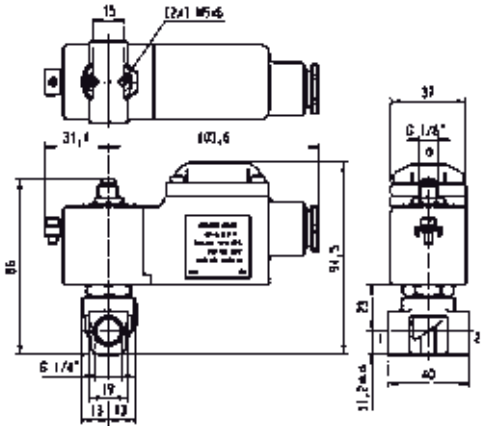

Disegno 8023

3/2 VALVOLE PER ARIA SECCA O LUBRIFICATA, GAS NEUTRI E LIQUIDI
COMANDO DIRETTO

OTTONE
MONTAGGIO SU RACCORDI
NORMALMENTE CHIUSA

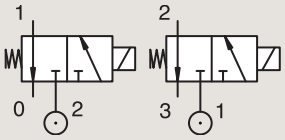

Raccordi	Orifizio Ø		Fattore portata				Pressione differenziale			Temp. Fluido		Tenuta	Valvola PARKER LUCIFER®			Potenza		Gruppo Elettrico	Disegno nr.
	1	(2)	1	(2)	1	(2)	Min	Mass		Min	Mass		Valvola	Housing	Bobina				
BSP	mm		Kv l/min		KV m³/h		bar	AC bar	DC bar	°C	°C					AC W	DC W		
1/4''	2.5	6	2.7	15	0.162	0.9	0.1	7	7	-10	75	FKM	**E131E03**	**4270**	**481000**	8	8	2.0	3525
	2.5	6	2.7	15	0.162	0.9	0.1	7	7	-10	75	FKM	**E131E03**	**2995**	**481865**	8	9	2.0	3525
	2.5	6	2.7	15	0.162	0.9	0.1	7	7	-10	75	FKM	**E131E03**	**4270**	**486265**	14	14	2.0	3525
	2.5	2.5	3.5	3.5	0.21	0.21	0	7	7	-10	100	FKM	**E131K03**	**4270**	**481000**	8	8	2.0	3510
	2.5	2.5	3.5	3.5	0.21	0.21	0	7	7	-10	100	FKM	**E131K03**	**2995**	**481865**	8	9	2.0	3510
	2.5	2.5	3.5	3.5	0.21	0.21	0	7	7	-40	75	PUR	**E131K0308**	**4270**	**481000**	8	8	2.1	3510
	2.5	2.5	3.5	3.5	0.21	0.21	0	7	7	-40	75	PUR	**E131K0308**	**2995**	**481865**	8	9	2.1	3510
	2.5	2.5	3.5	3.5	0.21	0.21	0	7	7	-10	120	FKM	**E131K0350** [1]	**4270**	**481000**	8	8	2.1	3510
	2.5	2.5	3.5	3.5	0.21	0.21	0	7	7	-10	100	FKM	**E131K0350** [1]	**2995**	**481865**	8	9	2.1	3510
	2.5	2.5	3.5	3.5	0.21	0.21	0	7	7	-30	130	Ruby	**E131K63**	**4270**	**481000**	8	8	2.0	3510
	2.5	2.5	3.5	3.5	0.21	0.21	0	7	7	-30	100	Ruby	**E131K63**	**2995**	**481865**	8	9	2.0	3510
	2.5	2.5	3.5	3.5	0.21	0.21	0	7	7	-30	130	Ruby	**E131K6350** [1]	**4270**	**481000**	8	8	2.1	3510
	2.5	2.5	3.5	3.5	0.21	0.21	0	7	7	-30	100	Ruby	**E131K6350** [1]	**2995**	**481865**	8	9	2.1	3510
	3	4	4.5	6	0.27	0.36	0	10	-	-10	75	FKM	**131T22**	**4270**	**481044**	14	-	2.2	3223
	3	4	4.5	6	0.27	0.36	0	10	-	-10	75	FKM	**131T22**	**2995**	**492425**	14	-	2.2	3223
	4.5	6	7	9	0.42	0.54	0	2	2	-10	75	FKM	**131T21**	**4270**	**481000**	8	8	2.0	3223
	4.5	6	7	9	0.42	0.54	0	2	2	-10	75	FKM	**131T21**	**2995**	**481865**	8	9	2.0	3223
	4.5	6	7	9	0.42	0.54	0	2	2	-10	75	FKM	**131T21**	**4270**	**486265**	14	14	2.0	3223

Nota:

1. Con comando manuale

In questa pagina	Raccordi	Orifizio (mm)	Kv (l/min)	Press. Diff. (bar)	Temp. Fluido (°C)	Temp. Amb. (°C)
da	1/4"	2.5	2.7	2	-40	-40
a	1/4"	4.5	7	10	130	50

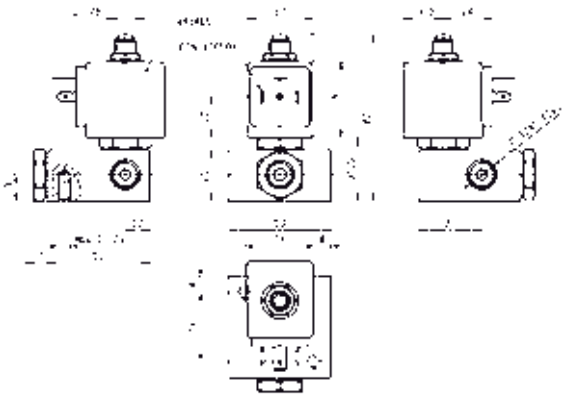

Disegno 3525

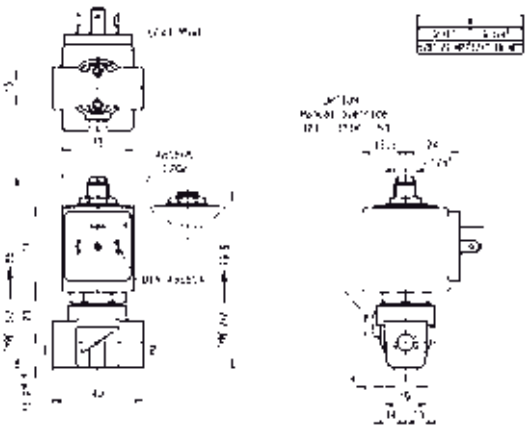

Disegno 3510

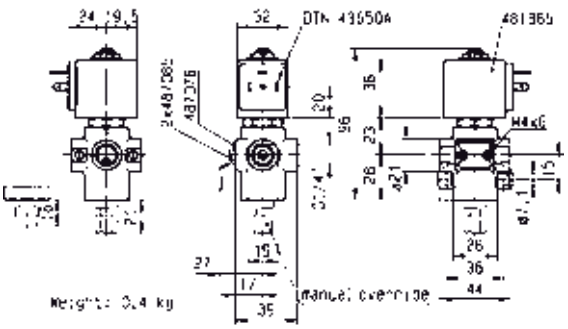

Disegno 3223

3/2 VALVOLE PER ARIA SECCA O LUBRIFICATA, GAS NEUTRI E LIQUIDI

COMANDO DIRETTO

OTTONE

MONTAGGIO SU RACCORDI

NORMALMENTE APERTA

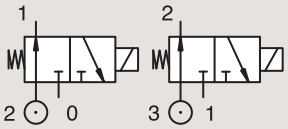

Raccordi	Orifizio Ø		Fattore portata				Pressione differenziale			Temp. Fluido		Tenuta	Valvola PARKER LUCIFER®			Potenza		Gruppo Elettrico	Disegno nr.
	1	(2)	1	(2)	1	(2)	Min	Mass		Min	Mass		Valvola	Housing	Bobina				
BSP	mm		Kv l/min		KV m³/h		bar	AC bar	DC bar	°C	°C					AC W	DC W		
1/4"	1.5	1.5	1.4	1.4	0.084	0.084	0	16	16	-10	120	FKM	**132K04**	**4270**	**481000**	8	8	2.1	3510
	1.5	1.5	1.4	1.4	0.084	0.084	0	16	16	-10	100	FKM	**132K04**	**2995**	**481865**	8	9	2.1	3510
	2	2	1.8	1.8	0.108	0.108	0	10	10	-10	120	FKM	**132K06**	**4270**	**481000**	8	8	2.1	3510
	2	2	1.8	1.8	0.108	0.108	0	10	10	-10	100	FKM	**132K06**	**2995**	**481865**	8	9	2.1	3510
	2	3	2.5	4.5	0.15	0.27	0	10	5	-10	75	FKM	**132T23**	**4270**	**481000**	8	8	2.0	3223
	2	3	2.5	4.5	0.15	0.27	0	10	5	-10	75	FKM	**132T23**	**2995**	**481865**	8	9	2.0	3223
	2	3	2.5	4.5	0.15	0.27	0	-	10	-10	75	FKM	**132T23**	**4270**	**486265**	-	14	2.0	3223
	2	3	2.5	4.5	0.15	0.27	0	10	5	-10	75	FKM	**132T2301** [1]	**4270**	**481000**	8	8	2.0	3223
	2	3	2.5	4.5	0.15	0.27	0	10	5	-10	75	FKM	**132T2301** [1]	**2995**	**481865**	8	9	2.0	3223
	2	3	2.5	4.5	0.15	0.27	0	-	10	-10	75	FKM	**132T2301** [1]	**4270**	**486265**	-	14	2.0	3223
	2.5	2.5	2.2	2.2	0.132	0.132	0	7	7	-10	120	FKM	**132K03**	**4270**	**481000**	8	8	2.1	3510
	2.5	2.5	2.2	2.2	0.132	0.132	0	7	7	-10	100	FKM	**132K03**	**2995**	**481865**	8	9	2.1	3510
	3	4	4.5	6	0.27	0.36	0	10	-	-10	75	FKM	**132T22**	**4270**	**481044**	14	-	2.2	3223
	3	4	4.5	6	0.27	0.36	0	7	-	-10	75	FKM	**132T22**	**2995**	**492425**	14	-	2.2	3223

Nota:

1. Con comando manuale

In questa pagina	Raccordi	Orifizio (mm)	Kv (l/min)	Press. Diff. (bar)	Temp. Fluido (°C)	Temp. Amb. (°C)
da	1/4"	1.5	1.4	5	-10	-30
a	1/4"	3	4.5	16	120	50

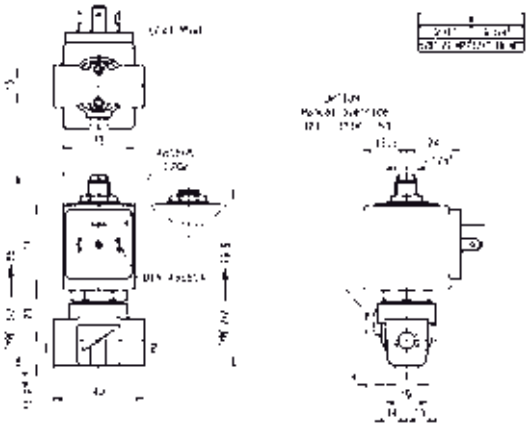

Disegno 3510

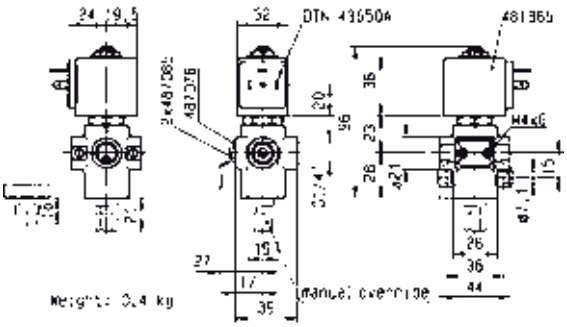

Disegno 3223

3/2 VALVOLE PER ARIA SECCA O LUBRIFICATA, GAS NEUTRI E LIQUIDI

COMANDO DIRETTO

OTTONE

MONTAGGIO SU RACCORDI

UNIVERSALE

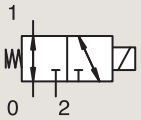

Raccordi	Orifizio Ø		Fattore Portata				Pressione differenziale			Temp. Fluido		Tenuta	Valvola PARKER			Potenza		Gruppo Elettrico	Disegno nr.
	1	(2)	1	(2)	1	(2)	Min	Mass		Min	Mass		Codice di ordinazione	Modello valvola	Modello bobina				
BSP	mm		Kv l/min		KV m³/h		bar	AC bar	DC bar	°C	°C					AC W	DC W		
1/8"	1.5	1.5	1.2	-	0.07	-	0	10	-	-10	140	FKM	**362410J**	**PM139AV**	**ZB09**	9	-	20.1/20.2	022
	1.5	1.5	1.2	-	0.07	-	0	-	10	-10	140	FKM	**362410J**	**PM139AV**	**ZB12**	-	12	20.1/20.2	022
1/4"	2	2	2	-	0.12	-	0	7	-	-10	140	FKM	**362460J**	**PM139FV**	**ZB09**	9	-	20.1/20.2	022
	2	2	2	-	0.12	-	0	-	7	-10	140	FKM	**362460J**	**PM139FV**	**ZB12**	-	12	20.1/20.2	022
	2.5	2.5	2.8	-	0.17	-	0	4	-	-10	140	FKM	**362470J**	**PM139GV**	**ZB09**	9	-	20.1/20.2	022
	2.5	2.5	2.8	-	0.17	-	0	-	4	-10	140	FKM	**362470J**	**PM139GV**	**ZB12**	-	12	20.1/20.2	022
	3.5	2.5	5	-	0.3	-	0	1	-	-10	140	FKM	**362475J**	**PM139LV**	**ZB09**	9	-	20.1/20.2	022
	3.5	2.5	5	-	0.3	-	0	-	1	-10	140	FKM	**362475J**	**PM139LV**	**ZB12**	-	12	20.1/20.2	022

In questa pagina	Raccordi	Orifizio (mm)	Kv (l/min)	Press. Diff. (bar)	Temp. Fluido (°C)	Temp. Amb. (°C)
da	1/8''	1.5	1.2	1	-10	-10
a	1/4''	3.5	5	10	140	50

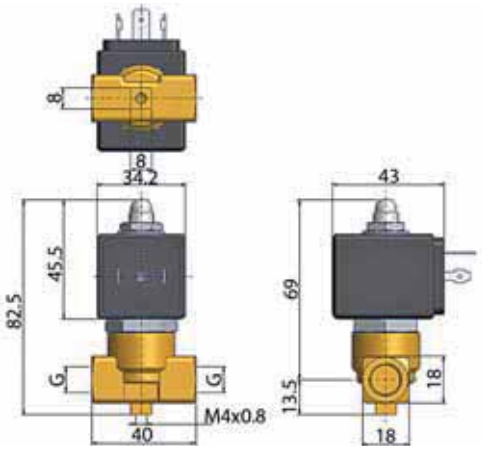

Disegno 022

3/2 VALVOLE PER ARIA SECCA O LUBRIFICATA, GAS NEUTRI E LIQUIDI
COMANDO DIRETTO

OTTONE
MONTAGGIO SU RACCORDI
UNIVERSALE

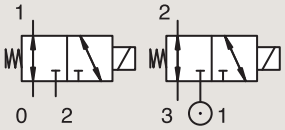

Raccordi	Orifizio Ø		Fattore portata				Pressione differenziale			Temp. Fluido		Tenuta	Valvola PARKER LUCIFER®			IS	Potenza		Gruppo Elettrico	Disegno nr.
	1	(2)	1	(2)	1	(2)	Min	Mass		Min	Mass		Valvola	Housing	Bobina					
BSP	mm		Kv l/min		KV m³/h		bar	AC bar	DC bar	°C	°C						AC W	DC W		
1/8"	1.5	1.5	1.5	1.5	0.09	0.09	0	10	10	-10	100	FKM	E133K14	2995	481865		8	9	2.1	3510
	1.5	1.5	1.5	1.5	0.09	0.09	0	10	10	-10	120	FKM	E133K14	4270	481000		8	8	2.1	3510
	2	2	2.5	2.5	0.15	0.15	0	7	7	-10	100	FKM	E133K16	2995	481865		8	9	2.1	3510
	2	2	2.5	-	0.15	-	0	7	7	-10	120	FKM	E133K16	4270	481000		8	8	2.1	3510
	2.5	2.5	3.5	3.5	0.21	0.21	0	4	4	-10	100	FKM	E133K13	2995	481865		8	9	2.1	3510
	2.5	2.5	3.5	3.5	0.21	0.21	0	4	4	-10	120	FKM	E133K13	4270	481000		8	8	2.1	3510
1/4"	0.8	0.8	0.3	0.3	0.018	0.018	0	30	30	-10	100	FKM	E133K05	2995	481865		8	9	2.1	3510
	0.8	0.8	0.3	0.3	0.018	0.018	0	30	30	-10	120	FKM	E133K05	4270	481000		8	8	2.1	3510
	0.8	0.8	0.3	0.3	0.018	0.018	0	30	30	-10	120	FKM	E133K05	4270	486265		14	14	2.0	3510
	1.5	1.5	1.5	1.5	0.09	0.09	0	-	3	-20	75	PUR	133K0497	2995	482740		-	1.6	6.0/8.0	8023
	1.5	1.5	1.5	1.5	0.09	0.09	0	3	3	-20	75	PUR	133K0497	-	495900		2.5	2	6.0/8.0	8023
	1.5	1.5	1.5	1.5	0.09	0.09	0	-	3	-20	75	PUR	133K0497	-	495910	*	-	0.3 to 3	6.0/8.0	8023
	1.5	1.5	1.5	1.5	0.09	0.09	0	-	3	-20	75	PUR	133K0497	2995	496125		-	1.6	6.0/8.0	8023
	1.5	1.5	1.5	1.5	0.09	0.09	0	10	10	-10	100	FKM	E133K04	2995	481865		8	9	2.0	3510
	1.5	1.5	1.5	1.5	0.09	0.09	0	10	10	-10	120	FKM	E133K04	4270	481000		8	8	2.0	3510
	1.5	1.5	1.5	1.5	0.09	0.09	0	10	10	-10	120	FKM	E133K04	4270	486265		14	14	2.0	3510
	1.5	1.5	1.5	1.5	0.09	0.09	0	10	10	-10	100	FKM	E133K0450 [1]	2995	481865		8	9	2.1	3510
	1.5	1.5	1.5	1.5	0.09	0.09	0	10	10	-10	120	FKM	E133K0450 [1]	4270	481000		8	8	2.1	3510
	2	2	2.5	2.5	0.15	0.15	0	7	7	-10	75	FKM	133T23	2995	481865		8	9	2.1	3223
	2	2	2.5	2.5	0.15	0.15	0	7	7	-10	75	FKM	133T23	4270	481000		8	8	2.1	3223
	2	2	2.5	2.5	0.15	0.15	0	7	7	-10	75	FKM	133T2301 [1]	2995	481865		8	9	2.1	3223
	2	2	2.5	2.5	0.15	0.15	0	7	7	-10	75	FKM	133T2301 [1]	4270	481000		8	8	2.1	3223
	2	2	2.5	2.5	0.15	0.15	0	7	7	-10	100	FKM	E133K06	2995	481865		8	9	2.0/3.0	3510
	2	2	2.5	2.5	0.15	0.15	0	7	7	-10	120	FKM	E133K06	4270	481000		8	8	2.0/3.0	3510
	2	2	2.5	2.5	0.15	0.15	0	7	7	-10	120	FKM	E133K06	4270	486265		14	14	2.0/3.0	3510
	2	2	2.5	2.5	0.15	0.15	0	7	7	-10	100	FKM	E133K0650 [1]	2995	481865		8	9	2.1	3510
	2	2	2.5	2.5	0.15	0.15	0	7	7	-10	120	FKM	E133K0650 [1]	4270	481000		8	8	2.1	3510
	2.5	2.5	3.5	3.5	0.21	0.21	0	4	4	-10	100	FKM	E133K03	2995	481865		8	9	2.0	3510
	2.5	2.5	3.5	3.5	0.21	0.21	0	4	4	-10	120	FKM	E133K03	4270	481000		8	8	2.0	3510
	2.5	2.5	3.5	3.5	0.21	0.21	0	4	4	-10	120	FKM	E133K03	4270	486265		14	14	2.0	3510
	2.5	2.5	3.5	3.5	0.21	0.21	0	4	4	-10	100	FKM	E133K0350 [1]	2995	481865		8	9	2.1	3510
	2.5	2.5	3.5	3.5	0.21	0.21	0	4	4	-10	120	FKM	E133K0350 [1]	4270	481000		8	8	2.1	3510
	3	3	4.5	4.5	0.27	0.27	0	2	2	-10	75	FKM	133T21	2995	481865		8	9	2.1	3223
	3	3	4.5	4.5	0.27	0.27	0	2	2	-10	75	FKM	133T21	4270	481000		8	8	2.1	3223

Nota:

1. Con comando manuale

In questa pagina	Raccordi	Orifizio (mm)	Kv (l/min)	Press. Diff. (bar)	Temp. Fluido (°C)	Temp. Amb. (°C)
da	1/8"	0.8	0.3	2	-20	-20
a	1/4"	3	4.5	30	120	50

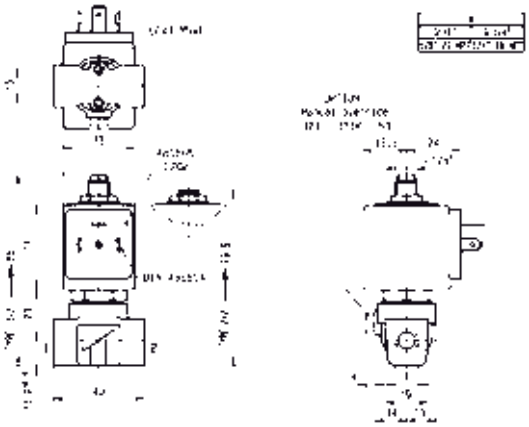

Disegno 3510

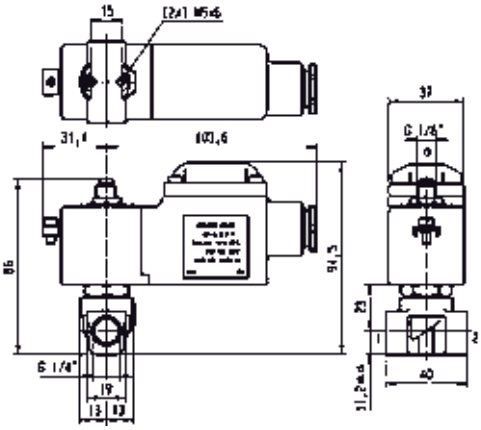

Disegno 8023

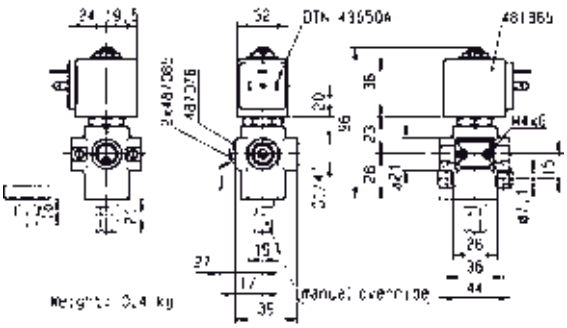

Disegno 3223

3/2 VALVOLE PER ARIA SECCA O LUBRIFICATA, GAS NEUTRI E LIQUIDI
COMANDO DIRETTO

OTTONE
MONTAGGIO SU RACCORDI
UNIVERSALE

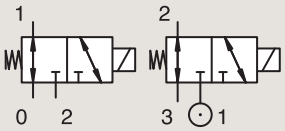

Raccordi	Orifizio Ø		Fattore portata				Pressione differenziale			Temp. Fluido		Tenuta	Valvola PARKER LUCIFER®			Potenza		Gruppo Elettrico	Disegno nr.
	1	(2)	1	(2)	1	(2)	Min	Mass		Min	Mass		Valvola	Housing	Bobina				
BSP	mm		Kv l/min		KV m³/h		bar	AC bar	DC bar	°C	°C					AC W	DC W		
1/4''	3	3	4.5	4.5	0.27	0.27	0	2	2	-10	75	FKM	133T2101 [1]	2995	481865	8	9	2.1	3223
	3	3	4.5	4.5	0.27	0.27	0	2	2	-10	75	FKM	133T2101 [1]	4270	481000	8	8	2.1	3223

Nota:

1. Con comando manuale

OTTONE
MONTAGGIO SU RACCORDI
CONTROLLO CON IMPULSI ELETTRICI

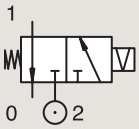

Raccordi	Orifizio Ø		Fattore portata				Pressione differenziale			Temp. Fluido		Tenuta	Valvola PARKER LUCIFER®			Potenza		Gruppo Elettrico	Disegno nr.
	1	(2)	1	(2)	1	(2)	Min	Mass		Min	Mass		Valvola	Housing	Bobina				
BSP	mm		Kv l/min		KV m³/h		bar	AC bar	DC bar	°C	°C					AC W	DC W		
1/4''	1.5	1.5	1.5	1.5	0.09	0.09	0	-	16	-10	100	FKM	135K04	4269	485400	-	13	4.0	8104

Parker Hannifin Corporation
Fluid Control Division Europe
Catalogo generale FCDE/0110/IT/V2.0

In questa pagina	Raccordi	Orifizio (mm)	Kv (l/min)	Press. Diff. (bar)	Temp. Fluido (°C)	Temp. Amb. (°C)
da	1/4"	1.5	1.5	2	-10	-10
a	1/4"	3	4.5	16	100	50

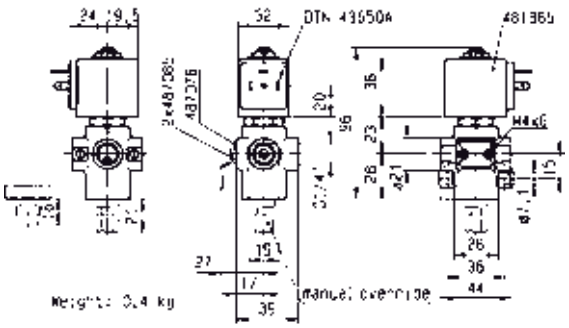

Disegno 3223

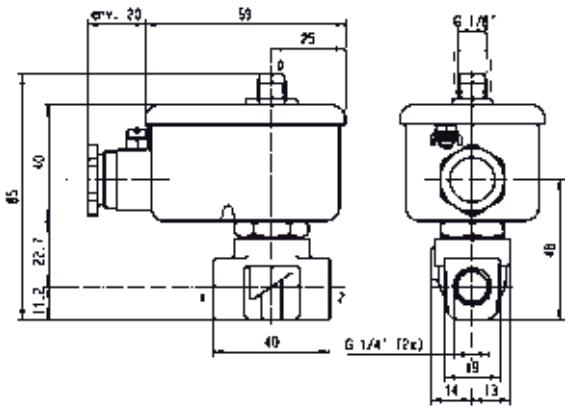

Disegno 8104

3/2 VALVOLE PER ARIA SECCA O LUBRIFICATA, GAS NEUTRI E LIQUIDI

COMANDO DIRETTO

OTTONE

MONTAGGIO SOTTOBASE

NORMALMENTE CHIUSA

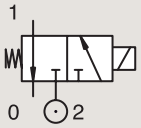

Raccordi	Orifizio Ø		Fattore Portata				Pressione differenziale			Temp. Fluido		Tenuta	Valvola PARKER			Potenza		Gruppo Elettrico	Disegno nr.
	1	(2)	1	(2)	1	(2)	Min	Mass		Min	Mass		Codice di ordinazione	Modello valvola	Modello bobina				
BSP	mm		Kv l/min		KV m³/h		bar	AC bar	DC bar	°C	°C					AC W	DC W		
SB	1.3	2.5	1	-	0.06	-	0	20	10	-30	140	Ruby	**360490J** [1]	**PM128GR**	**ZB09**	9	-	20.1/20.2	009
	1.3	2.5	1	-	0.06	-	0	20	10	-30	140	Ruby	**360480J** [1]	**PM128IR**	**YB09**	9	-	20.1/20.2	010
	1.3	2.5	1	-	0.06	-	0	20	10	-30	140	Ruby	**360480J** [1]	**PM128IR**	**ZB09**	9	-	20.1/20.2	010
	1.3	2.5	1	-	0.06	-	0	20	10	-10	140	FKM	**360506** [1]	**PM128ISV**	**ZB09**	9	-	20.1/20.2	010
	1.3	2.5	1	-	0.06	-	0	20	10	-10	140	FKM	**360479J** [1]	**PM128IV**	**ZB09**	9	-	20.1/20.2	010

Nota:

1. Pressione statica massima: 14,5 bar (per versione Viton pressione massima statica: 12 bar)

In questa pagina	Raccordi	Orifizio (mm)	Kv (l/min)	Press. Diff. (bar)	Temp. Fluido (°C)	Temp. Amb. (°C)
da	SB	1.3	1	10	-30	-10
a	SB	1.3	1	20	140	50

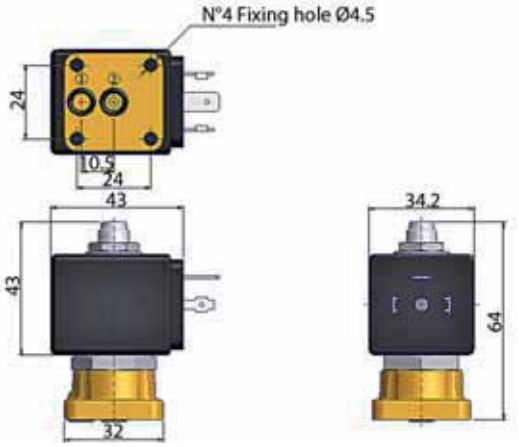

Disegno 009

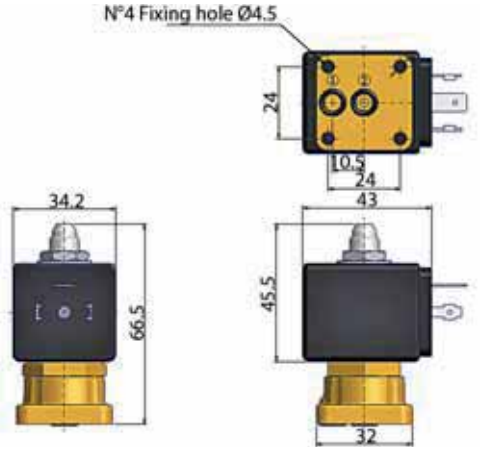

Disegno 010

3/2 VALVOLE PER ARIA SECCA O LUBRIFICATA, GAS NEUTRI E LIQUIDI
COMANDO DIRETTO

OTTONE
MONTAGGIO SOTTOBASE
NORMALMENTE CHIUSA

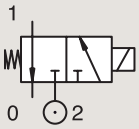

Raccordi	Orifizio Ø		Fattore portata				Pressione differenziale			Temp. Fluido		Tenuta	Valvola PARKER LUCIFER®			IS	Potenza		Gruppo Elettrico	Disegno nr.
	1	(2)	1	(2)	1	(2)	Min	Mass		Min	Mass		Valvola	Housing	Bobina					
BSP	mm		Kv l/min		KV m³/h		bar	AC bar	DC bar	°C	°C						AC W	DC W		
SB	1.2	1.5	0.7	0.9	0.04	0.05	0	10	10	-10	75	FKM	131M75	8993	488980		2	2.5	1.1	3383
	1.2	1.5	0.7	0.9	0.04	0.05	0	10	10	-10	75	FKM	131M7550 [1]	8993	488980		2	2.5	1.1	3383
	1.5	1.5	0.9	0.9	0.05	0.05	0	7	7	-10	75	FKM	131M74	8993	488980		2	2.5	1.1	3383
	1.5	1.5	0.9	0.9	0.05	0.05	0	7	7	-10	75	FKM	131M7450 [1]	8993	488980		2	2.5	1.1	3383
	1	1	0.6	0.6	0.03	0.03	0	-	10	-10	75	FKM	131F4490	2995	483580,01	*	-	0.5 to 3	7.0	7057
	1	1	0.6	0.6	0.03	0.03	0	-	10	-10	75	FKM	131F4490	-	488660,01	*	-	0.3 to 3	7.0	7057
	1	1	0.6	0.6	0.03	0.03	0	-	10	-10	75	FKM	131F4490	-	495910	*	-	0.3 to 3	7.0	7057
	1.5	2	1.5	2.2	0.09	0.13	0	-	16	-10	100	FKM	131F4410	2995	481865		-	9	2.1	3509
	1.5	1.5	1.5	1.5	0.09	0.09	0	-	7	-20	75	PUR	131F4497	2995	482740		-	1.6	6.0/8.0	8022
	1.5	1.5	1.5	1.5	0.09	0.09	0	7	7	-20	75	PUR	131F4497	-	495900		2.5	2	6.0/8.0	8022
	1.5	1.5	1.5	1.5	0.09	0.09	0	-	7	-20	75	PUR	131F4497	-	495910	*	-	0.3 to 3	6.0/8.0	8022
	1.5	1.5	1.5	1.5	0.09	0.09	0	-	7	-20	75	PUR	131F4497	2995	496125		-	1.6	6.0/8.0	8022

Nota:

1. Con comando manuale

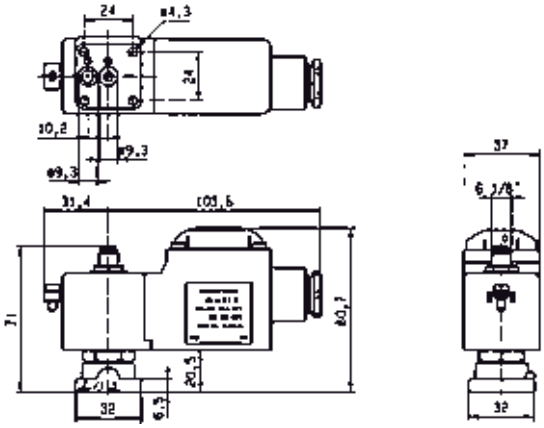

Disegno 8022

In questa pagina	Raccordi	Orifizio (mm)	Kv (l/min)	Press. Diff. (bar)	Temp. Fluido (°C)	Temp. Amb. (°C)
da	3.5 mm	1	0.6	7	-20	-20
a	5 mm	1.5	1.5	16	100	50

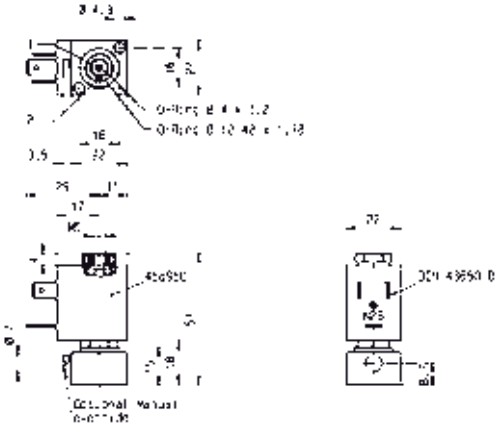

Disegno 3383

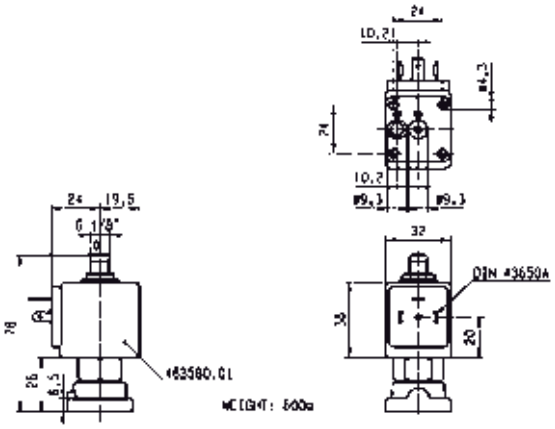

Disegno 7057

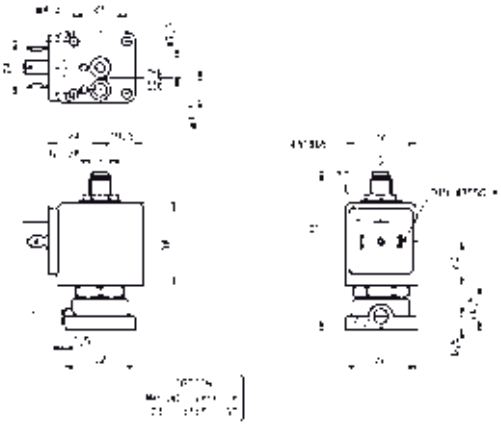

Disegno 3509

3/2 VALVOLE PER ARIA SECCA O LUBRIFICATA, GAS NEUTRI E LIQUIDI
COMANDO DIRETTO

OTTONE
MONTAGGIO SOTTOBASE
NORMALMENTE CHIUSA

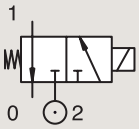

Raccordi	Orifizio Ø 1 mm	Orifizio Ø (2) mm	Fattore portata 1 Kv l/min	Fattore portata (2) Kv l/min	Fattore portata 1 KV m³/h	Fattore portata (2) KV m³/h	Pressione differenziale Min bar	Pressione differenziale Mass AC bar	Pressione differenziale Mass DC bar	Temp. Fluido Min °C	Temp. Fluido Mass °C	Tenuta	Valvola PARKER LUCIFER® Valvola	Valvola PARKER LUCIFER® Housing	Valvola PARKER LUCIFER® Bobina	Potenza AC W	Potenza DC W	Gruppo Elettrico	Disegno nr.
SB	1.5	1.5	1.5	1.5	0.09	0.09	0	15	15	-10	100	FKM	E131F44	2995	481865	8	9	2.1	3509
	1.5	1.5	1.5	1.5	0.09	0.09	0	15	15	-10	120	FKM	E131F44	4270	481000	8	8	2.1	3509
	1.5	1.5	1.5	1.5	0.09	0.09	0	15	15	-10	100	FKM	E131F4450 [1]	2995	481865	8	9	2.1	3509
	1.5	1.5	1.5	1.5	0.09	0.09	0	15	15	-10	100	FKM	E131F4450 [1]	4270	481000	8	8	2.1	3509
	2	2.5	2.5	3.5	0.15	0.21	0	10	10	-10	100	FKM	131F46	2995	481865	8	9	2.1	3509
	2	2.5	2.5	3.5	0.15	0.21	0	10	10	-10	120	FKM	131F46	4270	481000	8	8	2.1	3509
	2	2.5	2.5	3.5	0.15	0.21	0	10	10	-10	100	FKM	131F4650 [1]	2995	481865	8	9	2.1	3509
	2	2.5	2.5	3.5	0.15	0.21	0	10	10	-10	120	FKM	131F4650 [1]	4270	481000	8	8	2.1	3509
	2.5	2.5	3.5	3.5	0.21	0.21	0	7	7	-10	100	FKM	E131F43	2995	481865	8	9	2.1	3509
	2.5	2.5	3.5	3.5	0.21	0.21	0	7	7	-10	120	FKM	E131F43	4270	481000	8	8	2.1	3509
	2.5	2.5	3.5	3.5	0.21	0.21	0	7	7	-10	100	FKM	E131F4350 [1]	2995	481865	8	9	2.0	3509
	2.5	2.5	3.5	3.5	0.21	0.21	0	7	7	-10	120	FKM	E131F4350 [1]	4270	481000	8	8	2.0	3509
	2.5	2.5	3.5	3.5	0.21	0.21	0	7	7	-10	100	FKM	E131F4350 [1]	4270	486265	14	14	2.0	3509

Nota:

1. Con comando manuale

OTTONE
MONTAGGIO SOTTOBASE
NORMALMENTE APERTA

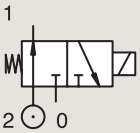

Raccordi	Orifizio Ø 1 mm	Orifizio Ø (2) mm	Fattore portata 1 Kv l/min	Fattore portata (2) Kv l/min	Fattore portata 1 KV m³/h	Fattore portata (2) KV m³/h	Pressione differenziale Min bar	Pressione differenziale Mass AC bar	Pressione differenziale Mass DC bar	Temp. Fluido Min °C	Temp. Fluido Mass °C	Tenuta	Valvola PARKER LUCIFER® Valvola	Valvola PARKER LUCIFER® Housing	Valvola PARKER LUCIFER® Bobina	Potenza AC W	Potenza DC W	Gruppo Elettrico	Disegno nr.
SB	1.5	1.5	1.4	1.4	0.084	0.084	0	15	15	-10	75	FKM	132F44	4270	481000	8	8	2.1	3509
	1.5	1.5	1.4	1.4	0.084	0.084	0	15	15	-10	75	FKM	132F44	2995	481865	8	9	2.1	3509
	2	2	1.8	1.8	0.108	0.108	0	10	10	-10	120	FKM	132F46	4270	481000	8	8	2.1	3509
	2	2	1.8	1.8	0.108	0.108	0	10	10	-10	100	FKM	132F46	2995	481865	8	9	2.1	3509
	2.5	2.5	2.2	2.2	0.132	0.132	0	7	7	-10	75	FKM	132F43	4270	481000	8	8	2.0	3509
	2.5	2.5	2.2	2.2	0.132	0.132	0	7	7	-10	75	FKM	132F43	2995	481865	8	9	2.0	3509
	2.5	2.5	2.2	2.2	0.132	0.132	0	7	7	-10	75	FKM	132F43	4270	486265	14	14	2.0	3509

In questa pagina	Raccordi	Orifizio (mm)	Kv (l/min)	Press. Diff. (bar)	Temp. Fluido (°C)	Temp. Amb. (°C)
da	SB	1.5	1.4	7	-10	-30
a	SB	2.5	3.5	15	120	50

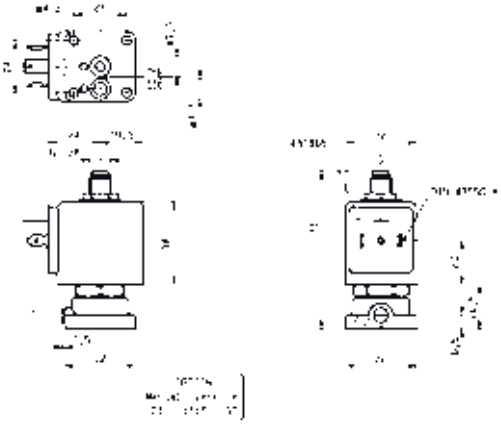

Disegno 3509

3/2 VALVOLE PER ARIA SECCA O LUBRIFICATA, GAS NEUTRI E LIQUIDI
COMANDO DIRETTO

OTTONE
MONTAGGIO SOTTOBASE
UNIVERSALE

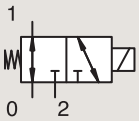

Raccordi	Orifizio Ø		Fattore portata				Pressione differenziale			Temp. Fluido		Tenuta	Valvola PARKER LUCIFER®			Potenza		Gruppo Elettrico	Disegno nr.
	1	(2)	1	(2)	1	(2)	Min	Mass		Min	Mass		Valvola	Housing	Bobina				
BSP	mm		Kv l/min		KV m³/h		bar	AC bar	DC bar	°C	°C					AC W	DC W		
SB	1.5	1.5	1.5	1.5	0.09	0.09	0	10	10	-10	100	FKM	**E133F4450**[1]	**4270**	**481000**	8	8	2.1	3509
	1.5	1.5	1.5	1.5	0.09	0.09	0	10	10	-10	120	FKM	**E133F4450**[1]	**2995**	**481865**	8	9	2.1	3509
	1.5	1.5	1.5	1.5	0.09	0.09	0	10	10	-10	120	FKM	**E133F44**	**4270**	**481000**	8	8	2.1	3509
	1.5	1.5	1.5	1.5	0.09	0.09	0	10	10	-10	100	FKM	**E133F44**	**2995**	**481865**	8	9	2.1	3509
	2	2	2.5	2.5	0.15	0.15	0	7	7	-10	120	FKM	**133F46**	**4270**	**481000**	8	8	2.1	3509
	2	2	2.5	2.5	0.15	0.15	0	7	7	-10	100	FKM	**133F46**	**2995**	**481865**	8	9	2.1	3509
	2.5	2.5	3.5	3.5	0.21	0.21	0	4	4	-10	120	FKM	**E133F43**	**4270**	**481000**	8	8	2.1	3509
	2.5	2.5	3.5	3.5	0.21	0.21	0	4	4	-10	100	FKM	**E133F43**	**2995**	**481865**	8	9	2.1	3509

Nota:

1. Con comando manuale

In questa pagina	Raccordi	Orifizio (mm)	Kv (l/min)	Press. Diff. (bar)	Temp. Fluido (°C)	Temp. Amb. (°C)
da	SB	1.5	1.5	4	-10	-10
a	SB	2.5	3.5	10	120	50

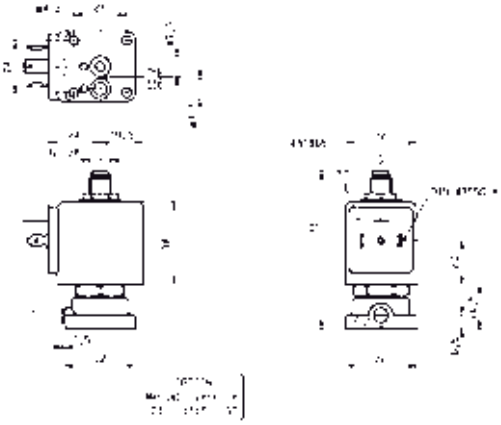

Disegno 3509

3/2 VALVOLE PER ARIA SECCA O LUBRIFICATA, GAS NEUTRI E LIQUIDI
COMANDO DIRETTO

ALLUMINIO ANODIZZATO
BANJO
NORMALMENTE CHIUSA

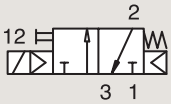

Raccordi	Orifizio Ø	Fattore Portata	Pressione differenziale			Temp. Fluido		Tenuta	Valvola PARKER LUCIFER®			Potenza		Gruppo Elettrico	Disegno nr.
	1		Min	Mass		Min	Mass		Valvola	Housing	Bobina				
BSP	mm	Qn l'min	bar	AC bar	DC bar	°C	°C					AC W	DC W		
	1.2	50	0	10	10	-10	50	NBR	**131B14$_{12}$**	-	**496131**	3	3	1.2	8227
	1.2	50	0	10	10	-10	50	NBR	**131B14$_{12}$**	-	**496482**	3	3	1.2	8227
	1.2	50	0	10	10	-10	50	NBR	**131B14$_{12}$**	-	**496637**	3	3	1.2	8227

Nota:

1. Con comando manuale
2. Valvole compatibili unicamente con aria e gas neutri

ALLUMINIO ANODIZZATO
BANJO
NORMALMENTE CHIUSA

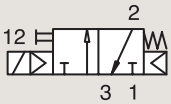

Raccordi	Orifizio Ø	Fattore Portata	Pressione differenziale			Temp. Fluido		Tenuta	Valvola PARKER LUCIFER®			Potenza		Gruppo Elettrico	Disegno nr.
	1		Min	Mass		Min	Mass		Valvola	Housing	Bobina				
BSP	mm	Qn l'min	bar	AC bar	DC bar	°C	°C					AC W	DC W		
1/8"	1.2	50	0	10	10	-10	50	NBR	**131B04$_{12}$**	-	**496131**	3	3	1.2	8226
	1.2	50	0	10	10	-10	50	NBR	**131B04$_{12}$**	-	**496482**	3	3	1.2	8226
	1.2	50	0	10	10	-10	50	NBR	**131B04$_{12}$**	-	**496637**	3	3	1.2	8226

Nota:

1. Con comando manuale
2. Valvole compatibili unicamente con aria e gas neutri

In questa pagina	Raccordi	Orifizio (mm)	Qn (l/min)	Press. Diff. (bar)	Temp. Fluido (°C)	Temp. Amb. (°C)
da	1/8"	1.2	50	10	-10	-10
a	1/8"	1.2	50	10	50	50

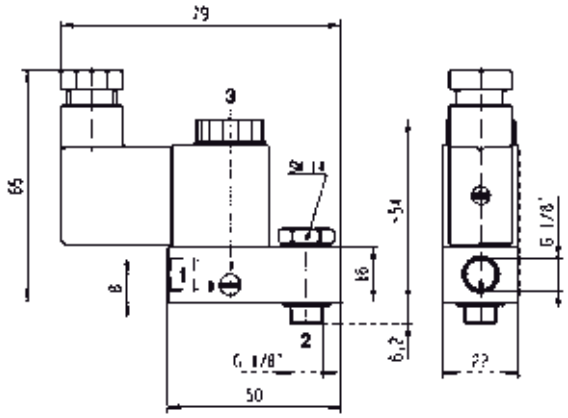

Disegno 8226

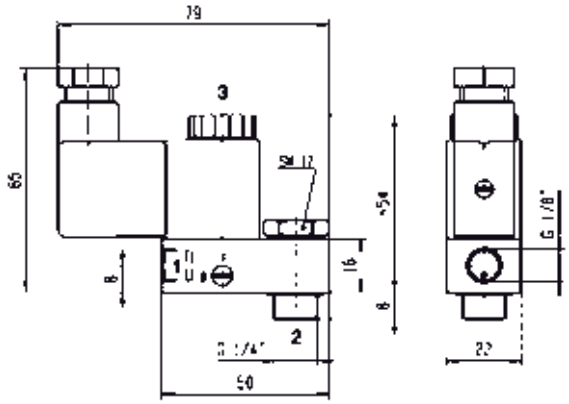

Disegno 8227

3/2 VALVOLE PER ARIA SECCA O LUBRIFICATA, GAS NEUTRI E LIQUIDI

COMANDO DIRETTO

AISI 303

MONTAGGIO SOTTOBASE

NORMALMENTE CHIUSA

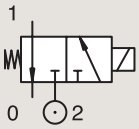

Raccordi	Orifizio Ø		Fattore portata				Pressione differenziale			Temp. Fluido		Tenuta	Valvola PARKER LUCIFER®			Potenza		Gruppo Elettrico	Disegno nr.
	1	(2)	1	(2)	1	(2)	Min	Mass		Min	Mass		Valvola	Housing	Bobina				
	mm		Kv l/min		KV m³/h		bar	AC bar	DC bar	°C	°C					AC W	DC W		
SB	1.5	1.5	1.5	2.2	0.09	0.132	0	15	15	-10	100	NBR	**131F5406**	**2995**	**481865**	8	9	2.1	3509

In questa pagina	Raccordi	Orifizio (mm)	Kv (l/min)	Press. Diff. (bar)	Temp. Fluido (°C)	Temp. Amb. (°C)
da	SB	1.5	1.5	15	-10	-10
a	SB	1.5	1.5	15	100	50

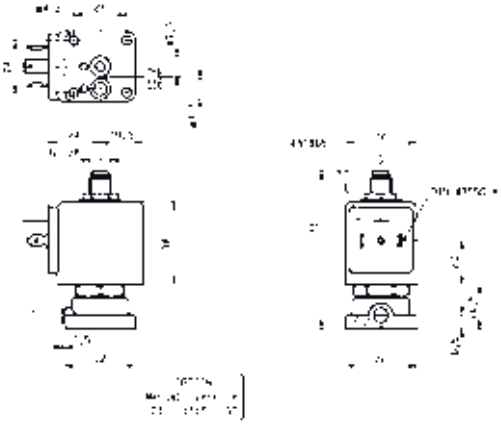

Disegno 3509

3/2 VALVOLE PER ARIA SECCA O LUBRIFICATA, GAS NEUTRI E LIQUIDI
COMANDO DIRETTO

POM
MONTAGGIO SOTTOBASE
NORMALMENTE CHIUSA

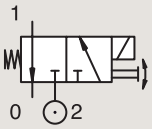

Raccordi	Orifizio Ø		Fattore portata				Pressione differenziale			Temp. Fluido		Tenuta	Valvola PARKER LUCIFER®			Potenza		Gruppo Elettrico	Disegno nr.
	1	(2)	1	(2)	1	(2)	Min	Mass		Min	Mass		Valvola	Housing	Bobina				
	mm		Kv l/min		KV m^3/h		bar	AC bar	DC bar	°C	°C					AC W	DC W		
SB	2	2	2	2	0.12	0.12	0	10	10	-10	50	FKM	**E131F26 12**	**2995**	**481865**	8	9	2.1/3.0	3601
	2	2	2	2	0.12	0.12	0	10	10	-10	50	FKM	**E131F26 2**	**2995**	**482730**	6	7	2.1/3.0	3601

Nota:

1. Il tempo di commutazione è di 2 minuti. Il tempo di commutazione non deve superare il 20 % del tempo di ciclo complessivo della valvola.
2. Con comando manuale

In questa pagina	Raccordi	Orifizio (mm)	Kv (l/min)	Press. Diff. (bar)	Temp. Fluido (°C)	Temp. Amb. (°C)
da	SB	2	2	10	-10	-10
a	SB	2	2	10	50	50

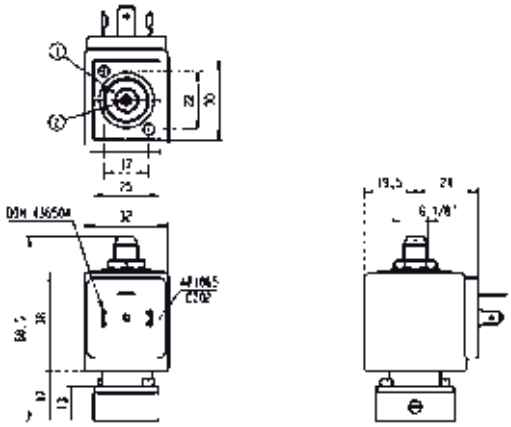

Disegno 3601

3/2 VALVOLE PER ARIA SECCA O LUBRIFICATA, GAS NEUTRI E LIQUIDI

SERVOPILOTATA

Impianti Industriali

Processo

ALLUMINIO ANODIZZATO
MONTAGGIO SU RACCORDI
NORMALMENTE CHIUSA

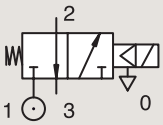

Raccordi	Orifizio Ø		Fattore portata				Pressione differenziale			Temp. Fluido		Tenuta	Valvola PARKER LUCIFER®			IS	Potenza		Gruppo Elettrico	Disegno nr.
	1	(2)	1	(2)	1	(2)	Min	Mass		Min	Mass		Valvola	Housing	Bobina					
BSP	mm		Kv l/min		KV m³/h		bar	AC bar	DC bar	°C	°C						AC W	DC W		
1/4"	6.5	6.5	10	-	0.6	-	1	-	10	-10	55	NBR	331B7490 [2]	2995	483580,01	*	-	0.5 to 3	7.0/8.0	8270
	6.5	6.5	10	-	0.6	-	1	-	10	-10	75	NBR	331B7490 [2]	-	488660,01	*	-	0.3 to 3	7.0/8.0	8270
	6.5	6.5	10	-	0.6	-	1	-	10	-10	75	NBR	331B7490 [2]	-	495910	*	-	0.3 to 3	7.0/8.0	8270
	6.5	-	10	-	0.6	-	1	10	10	-10	75	NBR	E331B74 [12]	2995	481865		8	9	2.1	3240
	6.5	-	10	-	0.6	-	1	10	10	-10	75	NBR	E331B74 [12]	4270	485100		8	8	2.1	3240
	8	8	20	20	1.2	1.2	1	15	15	-10	75	FKM	E331B01 [3]	4270	481000		8	8	2.1	3234
	8	8	20	20	1.2	1.2	1	15	15	-10	75	FKM	E331B01 [3]	2995	481865		8	9	2.1	3234
	8	8	20	20	1.2	1.2	1	15	15	-10	75	FKM	E331B01 [3]	-	483371		8	8	2.1	3234

Nota:

1. Con comando manuale
2. Valvole compatibili unicamente con aria e gas neutri
3. Valvole compatibili unicamente con olio idraulico e aria/gas neutri

In questa pagina	Raccordi	Orifizio (mm)	Kv (l/min)	Press. Diff. (bar)	Temp. Fluido (°C)	Temp. Amb. (°C)
da	1/4"	6.5	10	10	-10	-10
a	1/4"	8	20	15	75	50

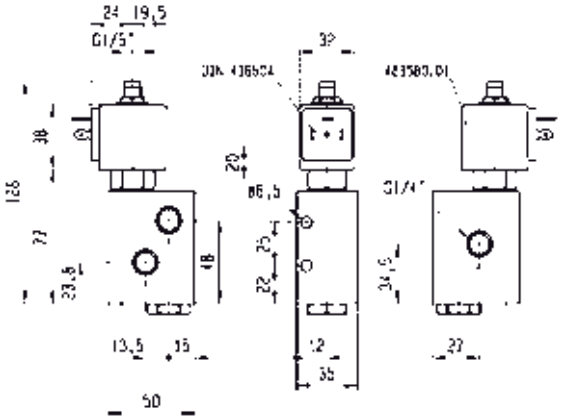

Disegno 8270

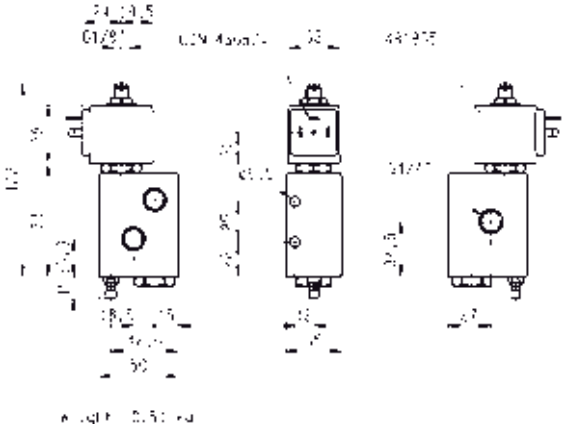

Disegno 3240

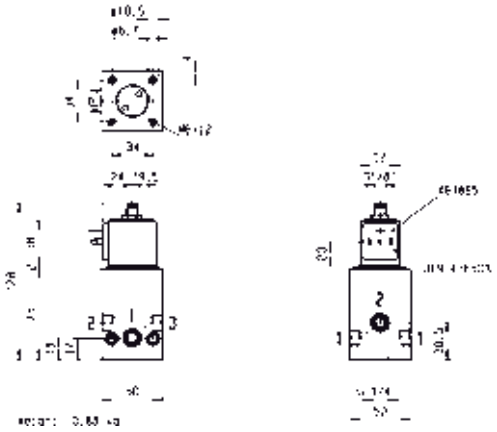

Disegno 3234

3/2 VALVOLE PER ARIA SECCA O LUBRIFICATA, GAS NEUTRI E LIQUIDI
SERVOPILOTATA

ALLUMINIO ANODIZZATO
MONTAGGIO SU RACCORDI
NORMALMENTE CHIUSA

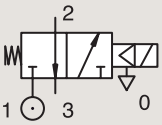

Raccordi	Orifizio Ø		Fattore portata				Pressione differenziale			Temp. Fluido		Tenuta	Valvola PARKER LUCIFER®			Potenza		Gruppo Elettrico	Disegno nr.
	1	(2)	1	(2)	1	(2)	Min	Mass		Min	Mass		Valvola	Housing	Bobina				
BSP	mm		Kv l/min		KV m³/h		bar	AC bar	DC bar	°C	°C					AC W	DC W		
1/2"	14	14	-	-	-	-	1	15	-	-10	75	FKM	E331B21 [1]	2995	482722	10	-	2.1	3238
	14	14	-	-	-	-	1	15	15	-10	75	FKM	E331B21 [1]	-	483371	8	8	2.1	3238

Nota:

1. Valvole compatibili unicamente con aria e gas neutri

ALLUMINIO ANODIZZATO
MONTAGGIO SU RACCORDI
NORMALMENTE APERTA

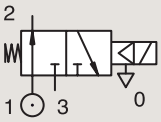

Raccordi	Orifizio Ø		Fattore portata				Pressione differenziale			Temp. Fluido		Tenuta	Valvola PARKER LUCIFER®			Potenza		Gruppo Elettrico	Disegno nr.
	1	(2)	1	(2)	1	(2)	Min	Mass		Min	Mass		Valvola	Housing	Bobina				
BSP	mm		Kv l/min		KV m³/h		bar	AC bar	DC bar	°C	°C					AC W	DC W		
1/4"	8	8	10	10	0.6	0.6	1	40	40	-10	75	NBR	332B02 [12]	2995	481865	8	9	2.1	8114
	8	8	10	10	0.6	0.6	1	40	40	-10	75	NBR	332B02 [12]	4270	481000	8	8	2.1	8114
	8	8	20	20	1.2	1.2	1	15	15	-10	75	FKM	E332B01 [2]	2995	481865	8	9	2.1	3234
	8	8	20	20	1.2	1.2	1	15	15	-10	75	FKM	E332B01 [2]	4270	481000	8	8	2.1	3234
	8	8	20	20	1.2	1.2	1	15	15	-10	75	FKM	E332B01 [2]	-	483371	8	8	2.1	3234

Nota:

1. Valvola con connessione del tubo di pilotaggio sulla via di scarico
2. Valvole compatibili unicamente con olio idraulico e aria/gas neutri

In questa pagina	Raccordi	Orifizio (mm)	Kv (l/min)	Press. Diff. (bar)	Temp. Fluido (°C)	Temp. Amb. (°C)
da	1/4"	8	10	15	-10	-10
a	1/2"	14	20	40	75	50

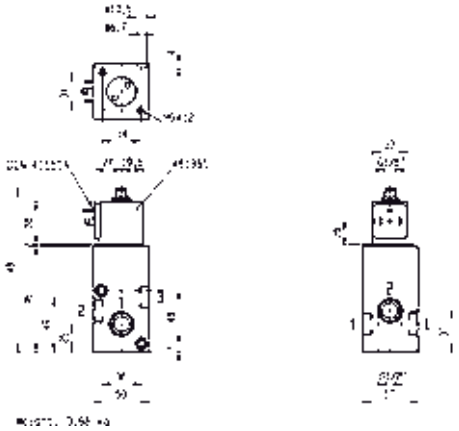

Disegno 3238

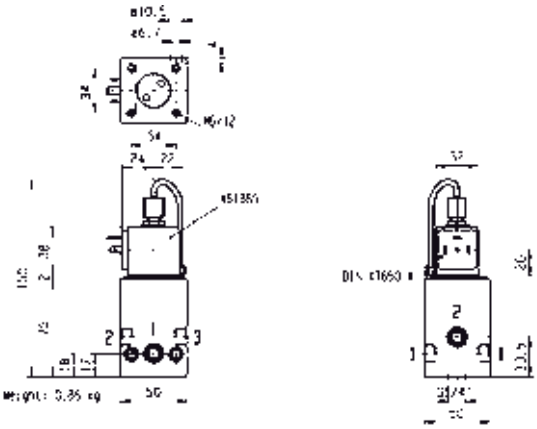

Disegno 8114

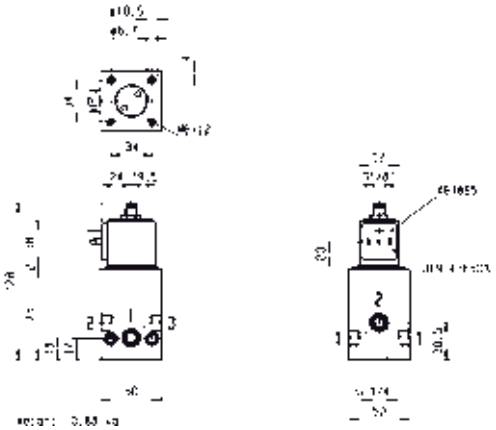

Disegno 3234

3/2 VALVOLE PER ARIA SECCA O LUBRIFICATA, GAS NEUTRI E LIQUIDI
SERVOPILOTATA

ALLUMINIO ANODIZZATO
MONTAGGIO SU RACCORDI
NORMALMENTE APERTA

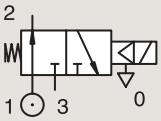

Raccordi	Orifizio Ø		Fattore portata	Pressione differenziale			Temp. Fluido		Tenuta	Valvola PARKER LUCIFER®			Potenza		Gruppo Elettrico	Disegno nr.
	1	(2)		Min	Max		Min	Max		Valvola	Housing	Bobina				
BSP	mm		Qn l/min	bar	AC bar	DC bar	°C	°C					AC W	DC W		
1/2"	14	14	2500	1	15	15	-10	100	FKM	E332B21 [1]	2995	481865	8	9	2.1	3238
	14	14	2500	1	15	15	-10	100	FKM	E332B21 [1]	4270	481000	8	8	2.1	3238

Nota:

1. Valvole compatibili unicamente con aria e gas neutri

ALLUMINIO ANODIZZATO
MONTAGGIO SOTTOBASE
NORMALMENTE CHIUSA

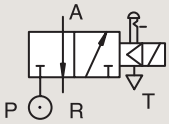

Raccordi	Orifizio Ø	Fattore Portata	Pressione differenziale			Temp. Fluido		Tenuta	Valvola PARKER LUCIFER®			Potenza		Gruppo Elettrico	Disegno nr.
	1		Min	Mass		Min	Mass		Valvola	Housing	Bobina				
BSP	mm	Qn l/min	bar	AC bar	DC bar	°C	°C					AC W	DC W		
SB	15	5000	0.5	10	10	-10	75	FKM	E331L21 [1]	2995	481865	8	9	2.1/3.0	3130
	15	5000	0.5	10	10	-10	75	FKM	E331L21 [1]	-	483371	8	8	2.1/3.0	3130

Nota:

1. Con comando manuale

In questa pagina	Raccordi	Orifizio (mm)	Qn (l/min)	Press. Diff. (bar)	Temp. Fluido (°C)	Temp. Amb. (°C)
da	1/2"	14	-	10	-10	-10
a	1/2"	15	5000	15	100	50

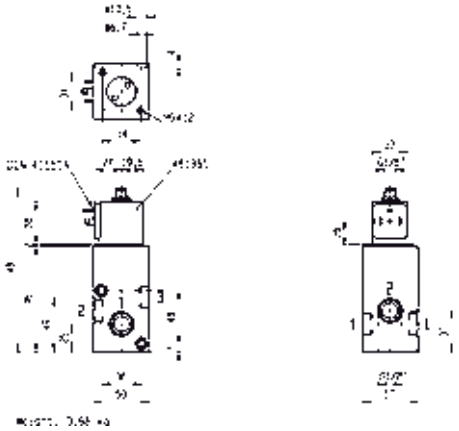

Disegno 3238

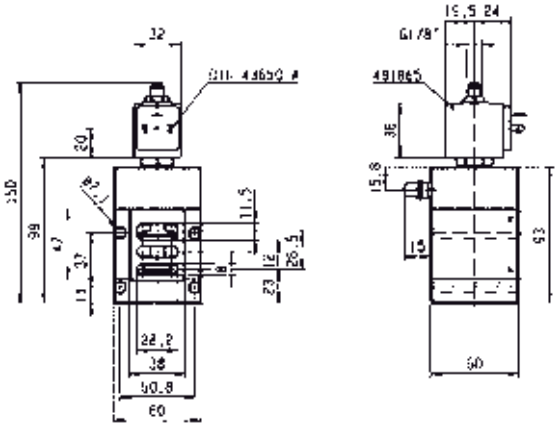

Disegno 3130

VALVOLE PER OLIO IDRAULICO E LIQUIDI NEUTRI (MAX.75 BAR)

3/2

Azionamento	Corpo	Funzione	Raccordi	Orifizio (mm)	Fattore Portata	Pressione Differenziale Mass. (Bar)	Temp. Mass. Fluido	Pagina Elettrovalvola Parker	Pagina Elettrovalvola Parker LUCIFER®
Servopilotata	Alluminio anodizzato/ Raccordi	Normalmente chiusa	1/4''	8	10	40	75	-	248

3/2 VALVOLE PER OLIO IDRAULICO E LIQUIDI NEUTRI (MAX.75 BAR)

SERVOPILOTATA

Processo

Impianti Industriali

ALLUMINIO ANODIZZATO
MONTAGGIO SU RACCORDI
NORMALMENTE CHIUSA

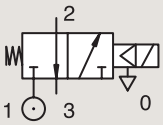

Raccordi	Orifizio Ø		Fattore portata				Pressione differenziale			Temp. Fluido		Tenuta	Valvola PARKER LUCIFER®			Potenza		Gruppo Elettrico	Disegno nr.
	1	(2)	1	(2)	1	(2)	Min	Mass		Min	Mass		Valvola	Housing	Bobina				
BSP	mm		Kv l/min		KV m^3/h		bar	AC bar	DC bar	°C	°C					AC W	DC W		
1/4"	8	8	10	10	0.6	0.6	1	40	40	-10	75	NBR	331B02 [12]	2995	481865	8	9	2.1	8114
	8	8	10	10	0.6	0.6	1	40	40	-10	75	NBR	331B02 [12]	4270	481000	8	8	2.1	8114
	8	8	10	10	0.6	0.6	1	40	40	-10	75	NBR	331B0216 [13]	2995	481865	8	9	2.1	8114
	8	8	10	10	0.6	0.6	1	40	40	-10	75	NBR	331B0216 [13]	4270	481000	8	8	2.1	8114

Nota:

1. Pilota con tenuta in Kel-F (PCTFE)
2. Valvole compatibili unicamente con olio idraulico
3. Valvole compatibili unicamente con aria e gas neutri

In questa pagina	Raccordi	Orifizio (mm)	Kv (l/min)	Press. Diff. (bar)	Temp. Fluido (°C)	Temp. Amb. (°C)
da	1/4"	8	10	40	-10	-10
a	1/4"	8	10	40	75	50

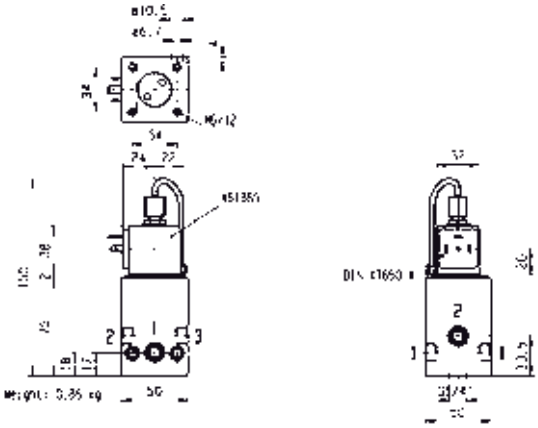

Disegno 8114

VALVOLE AD ALTA RESISTENZA ALLA CORROSIONE (303 STAINLESS STEEL)

3/2

Azionamento	Corpo	Funzione	Raccordi	Orifizio (mm)	Fattore Portata	Pressione Differenziale Mass. (Bar)	Temp. Mass. Fluido	Pagina Elettrovalvola Parker	Pagina Elettrovalvola Parker LUCIFER®
Comando diretto	AISI303/Raccordi	Normalmente chiusa	1/4''	1 a 2.5	3.5	15	180	-	252
			1/4''	1 a 2.5	3.5	15	180	-	252
		Universale	1/4''	1.5 a 2.5	3.5	10	180	-	254

3/2 VALVOLE CON ALTA RESISTENZA ALLA CORROSIONE (303 STAINLESS STEEL)

COMANDO DIRETTO

AISI 303

MONTAGGIO SU RACCORDI

NORMALMENTE CHIUSA

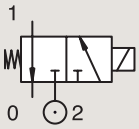

Raccordi	Orifizio Ø		Fattore portata				Pressione differenziale			Temp. Fluido		Tenuta	Valvola PARKER LUCIFER®			IS	Potenza		Gruppo Elettrico	Disegno nr.
	1	(2)	1	(2)	1	(2)	Min	Mass		Min	Mass		Valvola	Housing	Bobina					
BSP	mm		Kv l/min		KV m³/h		bar	AC bar	DC bar	°C	°C						AC W	DC W		
1/4"	1	1	0.6	0.6	0.03	0.03	0	-	10	-10	55	FKM	131V5490	2995	483580,01	*	-	0.5 to 3	7.0/8.0	6740
	1	1	0.6	0.6	0.03	0.03	0	-	10	-10	75	FKM	131V5490	-	488660,01	*	-	0.3 to 3	7.0/8.0	6740
	1	1	0.6	0.6	0.03	0.03	0	-	10	-10	75	FKM	131V5490	-	495910	*	-	0.3 to 3	7.0/8.0	6740
	1.5	1.5	1.5	1.5	0.09	0.09	0	15	15	-10	120	FKM	131V5406	4270	481000		8	8	2.1	8116
	1.5	1.5	1.5	1.5	0.09	0.09	0	15	15	-10	100	FKM	131V5406	2995	481865		8	9	2.1	8116
	1.5	1.5	1.5	1.5	0.09	0.09	0	15	15	0	130	Ruby	131V5463 [1]	4270	481000		8	8	2.0	8116
	1.5	1.5	1.5	1.5	0.09	0.09	0	15	15	0	100	Ruby	131V5463 [1]	2995	481865		8	9	2.0	8116
	1.5	1.5	1.5	1.5	0.09	0.09	0	15	15	0	180	Ruby	131V5463 [1]	4270	486265		14	14	2.0	8116
	1.5	1.5	1.5	1.5	0.09	0.09	0	-	7	-20	75	PUR	131V5497	2995	482740		-	1.6	3.0/6.0/8.0	8024
	1.5	1.5	1.5	1.5	0.09	0.09	0	7	7	-20	75	PUR	131V5497	-	495900		2.5	2	3.0/6.0/8.0	8024
	1.5	1.5	1.5	1.5	0.09	0.09	0	-	7	-20	75	PUR	131V5497	-	495910	*	-	0.3 to 3	3.0/6.0/8.0	8024
	1.5	1.5	1.5	1.5	0.09	0.09	0	-	7	-20	75	PUR	131V5497	2995	496125		-	1.6	3.0/6.0/8.0	8024
	2.5	2.5	3.5	3.5	0.21	0.21	0	7	7	-10	120	FKM	131V5306	4270	481000		8	8	2.1	8116
	2.5	2.5	3.5	3.5	0.21	0.21	0	7	7	-10	100	FKM	131V5306	2995	481865		8	9	2.1	8116
	2.5	2.5	3.5	3.5	0.21	0.21	0	7	7	-30	130	Ruby	131V5363 [1]	4270	481000		8	8	2.0	8116
	2.5	2.5	3.5	3.5	0.21	0.21	0	7	7	-30	100	Ruby	131V5363 [1]	2995	481865		8	9	2.0	8116
	2.5	2.5	3.5	3.5	0.21	0.21	0	7	7	-30	180	Ruby	131V5363 [1]	4270	486265		14	14	2.0	8116
	2.5	2.5	3	3	0.18	0.18	0	-	2	-20	75	PUR	131V5397	2995	482740		-	1.6	6.0/8.0	8024
	2.5	2.5	3	3	0.18	0.18	0	2	2	-20	75	PUR	131V5397	-	495900		2.5	2	6.0/8.0	8024
	2.5	2.5	3	3	0.18	0.18	0	-	2	-20	75	PUR	131V5397	-	495910	*	-	0.3 to 3	6.0/8.0	8024
	2.5	2.5	3	3	0.18	0.18	0	-	2	-20	75	PUR	131V5397	2995	496125		-	1.6	6.0/8.0	8024

Nota:

1. Valvole compatibili unicamente con olio idraulico e liquidi neutri

In questa pagina	Raccordi	Orifizio (mm)	Kv (l/min)	Press. Diff. (bar)	Temp. Fluido (°C)	Temp. Amb. (°C)
da	1/4"	1	0.6	2	-30	-20
a	1/4"	2.5	3.5	15	180	50

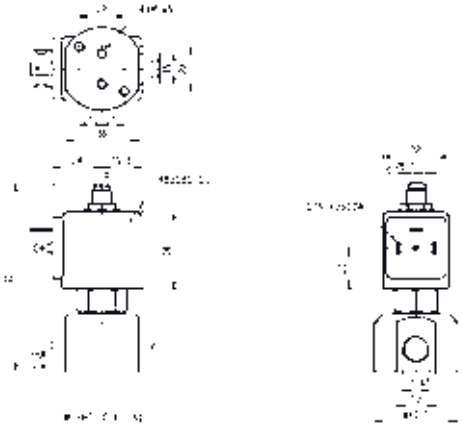

Disegno 6740

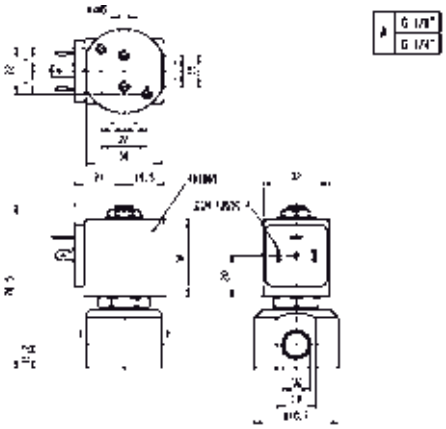

Disegno 8116

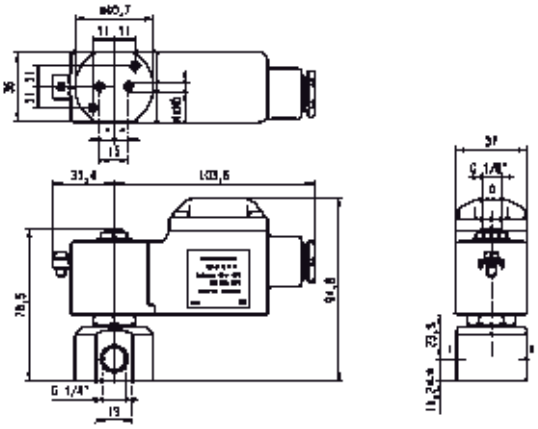

Disegno 8024

3/2 VALVOLE CON ALTA RESISTENZA ALLA CORROSIONE (303 STAINLESS STEEL)

COMANDO DIRETTO

AISI 303

MONTAGGIO SU RACCORDI

UNIVERSALE

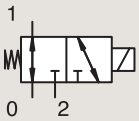

Raccordi	Orifizio Ø		Fattore portata				Pressione differenziale			Temp. Fluido		Tenuta	Valvola PARKER LUCIFER®			Potenza		Gruppo Elettrico	Disegno nr.
	1	(2)	1	(2)	1	(2)	Min	Mass		Min	Mass		Valvola	Housing	Bobina				
BSP	mm		Kv l/min		KV m^3/h		bar	AC bar	DC bar	°C	°C					AC W	DC W		
1/4"	1.5	1.5	1.5	1.5	0.09	0.09	0	10	10	-10	120	FKM	**133V5406**	**4270**	**481000**	8	8	2.1	8116
	1.5	1.5	1.5	1.5	0.09	0.09	0	10	10	-10	100	FKM	**133V5406**	**2995**	**481865**	8	9	2.1	8116
	1.5	1.5	1.5	1.5	0.09	0.09	0	10	10	0	130	Ruby	**133V5463**[1]	**4270**	**481000**	8	8	2.0	8116
	1.5	1.5	1.5	1.5	0.09	0.09	0	4	4	0	100	Ruby	**133V5463**[1]	**2995**	**481865**	8	9	2.0	8116
	1.5	1.5	1.5	1.5	0.09	0.09	0	10	10	0	180	Ruby	**133V5463**[1]	**4270**	**486265**	14	14	2.0	8116
	2.5	2.5	3.5	3.5	0.21	0.21	0	4	4	-10	120	FKM	**133V5306**	**4270**	**481000**	8	8	2.1	8116
	2.5	2.5	3.5	3.5	0.21	0.21	0	4	4	-10	100	FKM	**133V5306**	**2995**	**481865**	8	9	2.1	8116
	2.5	2.5	3.5	3.5	0.21	0.21	0	4	4	0	130	Ruby	**133V5363**[1]	**4270**	**481000**	8	8	2.0	8116
	2.5	2.5	3.5	3.5	0.21	0.21	0	4	4	0	100	Ruby	**133V5363**[1]	**2995**	**481865**	8	9	2.0	8116
	2.5	2.5	3.5	3.5	0.21	0.21	0	4	4	0	180	Ruby	**133V5363**[1]	**4270**	**486265**	14	14	2.0	8116

Nota:

1. Valvole compatibili unicamente con olio idraulico e liquidi neutri

In questa pagina	Raccordi	Orifizio (mm)	Kv (l/min)	Press. Diff. (bar)	Temp. Fluido (°C)	Temp. Amb. (°C)
da	1/4''	1.5	1.5	4	-10	-10
a	1/4''	2.5	3.5	10	180	50

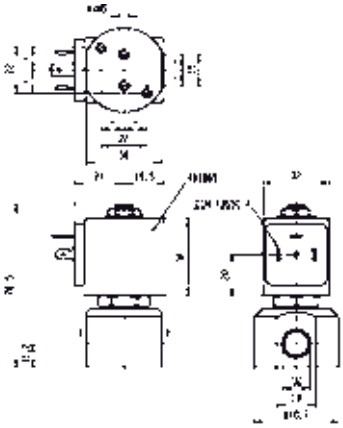

Disegno 8116

VALVOLE PER DISTRIBUTORI DI BEVANDE - LIQUIPURE®

3/2

Azionamento	Corpo	Funzione	Raccordi	Orifizio (mm)	Fattore Portata	Pressione Differenziale Mass. (Bar)	Temp. Mass. Fluido	Pagina Elettrovalvola Parker
Comando diretto	AISI/Sottobase	Normalmente chiusa	SB	1.5 a 3	4.2	14	140	258

3/2 VALVOLE PER DISTRIBUTORI DI BEVANDE - LIQUIPURE®

COMANDO DIRETTO

Erogazione di Bevande

Medicale / Strumentazione

AISI

MONTAGGIO SOTTOBASE

NORMALMENTE CHIUSA

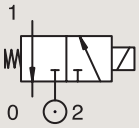

Raccordi	Orifizio Ø		Fattore portata				Pressione differenziale			Temp. Fluido		Tenuta	Valvola PARKER			Potenza		Gruppo Elettrico	Disegno nr.
	1	(2)	1	(2)	1	(2)	Min	Mass		Min	Mass		Valvola	Housing	Bobina				
	mm		Kv l/min		KV m³/h		bar	AC bar	DC bar	°C	°C					AC W	DC W		
SB	1.5	2.5	1.3	-	0.08	-	0	14	14	-10	140	Ruby	3019F1GRG7	-	D4	13	16	24.0	072
	1.5	2.5	1.3	-	0.08	-	0	14	14	-10	140	Ruby	3019F1GRG7	-	D5	8	9	24.0	072
	1.5	2.5	1.3	-	0.08	-	0	14	14	-10	140	Ruby	3019F1GRG7	-	LA	9	9	24.0	072
	1.5	2.5	1.3	-	0.08	-	0	14	14	-10	140	Ruby	3019F1GRG7	-	LB-LC	13	16	24.0	072
	1.5	2.5	1.3	-	0.08	-	0	14	-	-10	140	Ruby	3019F1GRG7	-	XS03	9	-	24.0	072
	1.5	2.5	1.3	-	0.08	-	0	14	14	-10	140	FDA FKM	3019F1GVG7	-	D4	13	16	24.0	072
	1.5	2.5	1.3	-	0.08	-	0	14	14	-10	140	FDA FKM	3019F1GVG7	-	D5	8	9	24.0	072
	1.5	2.5	1.3	-	0.08	-	0	14	14	-10	140	FDA FKM	3019F1GVG7	-	LA	9	9	24.0	072
	1.5	2.5	1.3	-	0.08	-	0	14	14	-10	140	FDA FKM	3019F1GVG7	-	LB-LC	13	16	24.0	072
	1.5	2.5	1.3	-	0.08	-	0	14	-	-10	140	FDA FKM	3019F1GVG7	-	XS03	9	-	24.0	072
	1.5	2.5	1.3	-	0.08	-	0	14	14	-10	140	Ruby	301XGFRTG7	-	D4	13	16	24.0	073
	1.5	2.5	1.3	-	0.08	-	0	14	14	-10	140	Ruby	301XGFRTG7	-	D5	8	9	24.0	073
	1.5	2.5	1.3	-	0.08	-	0	14	14	-10	140	Ruby	301XGFRTG7	-	LA	9	9	24.0	073
	1.5	2.5	1.3	-	0.08	-	0	14	14	-10	140	Ruby	301XGFRTG7	-	LB-LC	13	16	24.0	073
	1.5	2.5	1.3	-	0.08	-	0	14	-	-10	140	Ruby	301XGFRTG7	-	XS03	9	-	24.0	073
	1.5	2.5	1.3	-	0.08	-	0	14	14	-10	140	FDA FKM	301XGFVTG7	-	D4	13	16	24.0	073
	1.5	2.5	1.3	-	0.08	-	0	14	14	-10	140	FDA FKM	301XGFVTG7	-	D5	8	9	24.0	073
	1.5	2.5	1.3	-	0.08	-	0	14	14	-10	140	FDA FKM	301XGFVTG7	-	LA	9	9	24.0	073
	1.5	2.5	1.3	-	0.08	-	0	14	14	-10	140	FDA FKM	301XGFVTG7	-	LB-LC	13	16	24.0	073
	1.5	2.5	1.3	-	0.08	-	0	14	-	-10	140	FDA FKM	301XGFVTG7	-	XS03	9	-	24.0	073
	2	2.5	2.2	-	0.13	-	0	10	10	-10	140	Ruby	3019F1JRG7	-	D4	13	16	24.0	072
	2	2.5	2.2	-	0.13	-	0	10	10	-10	140	Ruby	3019F1JRG7	-	D5	8	9	24.0	072
	2	2.5	2.2	-	0.13	-	0	10	10	-10	140	Ruby	3019F1JRG7	-	LA	9	9	24.0	072
	2	2.5	2.2	-	0.13	-	0	10	10	-10	140	Ruby	3019F1JRG7	-	LB-LC	13	16	24.0	072

In questa pagina	Raccordi	Orifizio (mm)	Kv (l/min)	Press. Diff. (bar)	Temp. Fluido (°C)	Temp. Amb. (°C)
da	SB	1.5	1.3	10	-10	-10
a	SB	2	2.2	14	140	50

Disegno 072

Disegno 073

3/2 VALVOLE PER DISTRIBUTORI DI BEVANDE - LIQUIPURE®

COMANDO DIRETTO

AISI

MONTAGGIO SOTTOBASE

NORMALMENTE CHIUSA

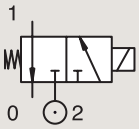

Raccordi	Orifizio Ø		Fattore portata				Pressione differenziale			Temp. Fluido		Tenuta	Valvola PARKER			Potenza		Gruppo Elettrico	Disegno nr.
	1	(2)	1	(2)	1	(2)	Min	Mass		Min	Mass		Valvola	Housing	Bobina				
	mm		Kv l/min		KV m³/h		bar	AC bar	DC bar	°C	°C					AC W	DC W		
SB	2	2.5	2.2	-	0.13	-	0	10	-	-10	140	Ruby	3019F1JRG7	-	XS03	9	-	24.0	072
	2	2.5	2.2	-	0.13	-	0	10	10	-10	140	FDA FKM	3019F1JVG7	-	D4	13	16	24.0	072
	2	2.5	2.2	-	0.13	-	0	10	10	-10	140	FDA FKM	3019F1JVG7	-	D5	8	9	24.0	072
	2	2.5	2.2	-	0.13	-	0	10	10	-10	140	FDA FKM	3019F1JVG7	-	LA	9	9	24.0	072
	2	2.5	2.2	-	0.13	-	0	10	10	-10	140	FDA FKM	3019F1JVG7	-	LB-LC	13	16	24.0	072
	2	2.5	2.2	-	0.13	-	0	10	-	-10	140	FDA FKM	3019F1JVG7	-	XS03	9	-	24.0	072
	2	2.5	2.2	-	0.13	-	0	10	10	-10	140	Ruby	301XGFRTJ7	-	D4	13	16	24.0	073
	2	2.5	2.2	-	0.13	-	0	10	10	-10	140	Ruby	301XGFRTJ7	-	D5	8	9	24.0	073
	2	2.5	2.2	-	0.13	-	0	10	10	-10	140	Ruby	301XGFRTJ7	-	LA	9	9	24.0	073
	2	2.5	2.2	-	0.13	-	0	10	10	-10	140	Ruby	301XGFRTJ7	-	LB-LC	13	16	24.0	073
	2	2.5	2.2	-	0.13	-	0	10	-	-10	140	Ruby	301XGFRTJ7	-	XS03	9	-	24.0	073
	2	2.5	2.2	-	0.13	-	0	10	10	-10	140	FDA FKM	301XGFVTJ7	-	D4	13	16	24.0	073
	2	2.5	2.2	-	0.13	-	0	10	10	-10	140	FDA FKM	301XGFVTJ7	-	D5	8	9	24.0	073
	2	2.5	2.2	-	0.13	-	0	10	10	-10	140	FDA FKM	301XGFVTJ7	-	LA	9	9	24.0	073
	2	2.5	2.2	-	0.13	-	0	10	10	-10	140	FDA FKM	301XGFVTJ7	-	LB-LC	13	16	24.0	073
	2	2.5	2.2	-	0.13	-	0	10	-	-10	140	FDA FKM	301XGFVTJ7	-	XS03	9	-	24.0	073
	2.5	2.5	2.8	-	0.17	-	0	6.5	6.5	-10	140	Ruby	3019F1LRG7	-	D4	13	16	24.0	072
	2.5	2.5	2.8	-	0.17	-	0	6.5	6.5	-10	140	Ruby	3019F1LRG7	-	D5	8	9	24.0	072
	2.5	2.5	2.8	-	0.17	-	0	6.5	6.5	-10	140	Ruby	3019F1LRG7	-	LA	9	9	24.0	072
	2.5	2.5	2.8	-	0.17	-	0	6.5	6.5	-10	140	Ruby	3019F1LRG7	-	LB-LC	13	16	24.0	072
	2.5	2.5	2.8	-	0.17	-	0	6.5	-	-10	140	Ruby	3019F1LRG7	-	XS03	9	-	24.0	072
	2.5	2.5	2.8	-	0.17	-	0	6.5	6.5	-10	140	FDA FKM	3019F1LVG7	-	D4	13	16	24.0	072
	2.5	2.5	2.8	-	0.17	-	0	6.5	6.5	-10	140	FDA FKM	3019F1LVG7	-	D5	8	9	24.0	072
	2.5	2.5	2.8	-	0.17	-	0	6.5	6.5	-10	140	FDA FKM	3019F1LVG7	-	LA	9	9	24.0	072
	2.5	2.5	2.8	-	0.17	-	0	6.5	6.5	-10	140	FDA FKM	3019F1LVG7	-	LB-LC	13	16	24.0	072
	2.5	2.5	2.8	-	0.17	-	0	6.5	-	-10	140	FDA FKM	3019F1LVG7	-	XS03	9	-	24.0	072
	2.5	2.5	2.8	-	0.17	-	0	6.5	6.5	-10	140	Ruby	301XGFRTL7	-	D4	13	16	24.0	073
	2.5	2.5	2.8	-	0.17	-	0	6.5	6.5	-10	140	Ruby	301XGFRTL7	-	D5	8	9	24.0	073
	2.5	2.5	2.8	-	0.17	-	0	6.5	6.5	-10	140	Ruby	301XGFRTL7	-	LA	9	9	24.0	073
	2.5	2.5	2.8	-	0.17	-	0	6.5	6.5	-10	140	Ruby	301XGFRTL7	-	LB-LC	13	16	24.0	073
	2.5	2.5	2.8	-	0.17	-	0	6.5	-	-10	140	Ruby	301XGFRTL7	-	XS03	9	-	24.0	073
	2.5	2.5	2.8	-	0.17	-	0	6.5	6.5	-10	140	FDA FKM	301XGFVTL7	-	D4	13	16	24.0	073
	2.5	2.5	2.8	-	0.17	-	0	6.5	6.5	-10	140	FDA FKM	301XGFVTL7	-	D5	8	9	24.0	073
	2.5	2.5	2.8	-	0.17	-	0	6.5	6.5	-10	140	FDA FKM	301XGFVTL7	-	LA	9	9	24.0	073
	2.5	2.5	2.8	-	0.17	-	0	6.5	6.5	-10	140	FDA FKM	301XGFVTL7	-	LB-LC	13	16	24.0	073

In questa pagina	Raccordi	Orifizio (mm)	Kv (l/min)	Press. Diff. (bar)	Temp. Fluido (°C)	Temp. Amb. (°C)
da	SB	2	2.2	6.5	-10	-10
a	SB	2.5	2.8	10	140	50

Disegno 072

Disegno 073

3/2 VALVOLE PER DISTRIBUTORI DI BEVANDE - LIQUIPURE®

COMANDO DIRETTO

AISI

MONTAGGIO SOTTOBASE

NORMALMENTE CHIUSA

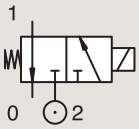

Raccordi	Orifizio Ø		Fattore portata				Pressione differenziale			Temp. Fluido		Tenuta	Valvola PARKER			Potenza		Gruppo Elettrico	Disegno nr.
	1	(2)	1	(2)	1	(2)	Min	Mass		Min	Mass		Valvola	Housing	Bobina				
	mm		Kv l/min		KV m^3/h		bar	AC bar	DC bar	°C	°C					AC W	DC W		
SB	2.5	2.5	2.8	-	0.17	-	0	6.5	-	-10	140	FDA FKM	**301XGFVTL7**	**-**	**XS03**	9	-	24.0	073
	3	2.5	3.3	-	0.2	-	0	4	4	-10	140	Ruby	**3019F1NRG7**	**-**	**D4**	13	16	24.0	072
	3	2.5	3.3	-	0.2	-	0	4	4	-10	140	Ruby	**3019F1NRG7**	**-**	**D5**	8	9	24.0	072
	3	2.5	3.3	-	0.2	-	0	4	4	-10	140	Ruby	**3019F1NRG7**	**-**	**LA**	9	9	24.0	072
	3	2.5	3.3	-	0.2	-	0	4	4	-10	140	Ruby	**3019F1NRG7**	**-**	**LB-LC**	13	16	24.0	072
	3	2.5	3.3	-	0.2	-	0	4	-	-10	140	Ruby	**3019F1NRG7**	**-**	**XS03**	9	-	24.0	072
	3	2.5	3.3	-	0.2	-	0	4	4	-10	140	FDA FKM	**3019F1NVG7**	**-**	**D4**	13	16	24.0	072
	3	2.5	3.3	-	0.2	-	0	4	4	-10	140	FDA FKM	**3019F1NVG7**	**-**	**D5**	8	9	24.0	072
	3	2.5	3.3	-	0.2	-	0	4	4	-10	140	FDA FKM	**3019F1NVG7**	**-**	**LA**	9	9	24.0	072
	3	2.5	3.3	-	0.2	-	0	4	4	-10	140	FDA FKM	**3019F1NVG7**	**-**	**LB-LC**	13	16	24.0	072
	3	2.5	3.3	-	0.2	-	0	4	-	-10	140	FDA FKM	**3019F1NVG7**	**-**	**XS03**	9	-	24.0	072
	3	2.5	4.2	-	0.25	-	0	4	4	-10	140	Ruby	**301XGFRTN7**	**-**	**D4**	13	16	24.0	073
	3	2.5	4.2	-	0.25	-	0	4	4	-10	140	Ruby	**301XGFRTN7**	**-**	**D5**	8	9	24.0	073
	3	2.5	4.2	-	0.25	-	0	4	4	-10	140	Ruby	**301XGFRTN7**	**-**	**LA**	9	9	24.0	073
	3	2.5	4.2	-	0.25	-	0	4	4	-10	140	Ruby	**301XGFRTN7**	**-**	**LB-LC**	13	16	24.0	073
	3	2.5	4.2	-	0.25	-	0	4	-	-10	140	Ruby	**301XGFRTN7**	**-**	**XS03**	9	-	24.0	073
	3	2.5	4.2	-	0.25	-	0	4	4	-10	140	FDA FKM	**301XGFVTN7**	**-**	**D4**	13	16	24.0	073
	3	2.5	4.2	-	0.25	-	0	4	4	-10	140	FDA FKM	**301XGFVTN7**	**-**	**D5**	8	9	24.0	073
	3	2.5	4.2	-	0.25	-	0	4	4	-10	140	FDA FKM	**301XGFVTN7**	**-**	**LA**	9	9	24.0	073
	3	2.5	4.2	-	0.25	-	0	4	4	-10	140	FDA FKM	**301XGFVTN7**	**-**	**LB-LC**	13	16	24.0	073
	3	2.5	4.2	-	0.25	-	0	4	-	-10	140	FDA FKM	**301XGFVTN7**	**-**	**XS03**	9	-	24.0	073

In questa pagina	Raccordi	Orifizio (mm)	Kv (l/min)	Press. Diff. (bar)	Temp. Fluido (°C)	Temp. Amb. (°C)
da	SB	2.5	2.8	4	-10	-10
a	SB	3	4.2	6.5	140	50

Disegno 073

Disegno 072

VALVOLE 2/2 TRANSPORTATION

Acqua

2/2

Azionamento	Corpo	Funzione	Raccordi	Orifizio (mm)	Fattore Portata	Pressione Differenziale Mass. (Bar)	Temp. Mass. Fluido	Pagina Elettrovalvola Parker	Pagina Elettrovalvola Parker LUCIFER®
Servopilotata	Ottone/Innesti rapidi	Normalmente chiusa	10 mm	11	12	3	90	-	266
	Ottone/Raccordo portagomma	Normalmente chiusa	10 mm	11	12	3	90	-	266
	Ottone/Montaggio su raccordi	Normalmente chiusa	12.7 mm	11	33	3	90	-	268
			15.9 mm	11	36	3	90	-	268

2/2 VALVOLE 2/2 TRANSPORTATION

SERVOPILOTATA

OTTONE
INNESTI RAPIDI
NORMALMENTE CHIUSA

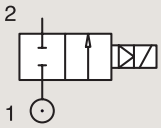

Raccordi	Orifizio Ø	Fattore Portata			Pressione differenziale			Temp. Fluido		Tenuta	Valvola PARKER LUCIFER®			Voltaggio	Potenza		Gruppo Elettrico	Disegno nr.
					Min	Mass		Min	Mass		Valvola	Housing	Bobina					
	mm	Kv l/min	KV m³/h	Qn l/min	bar	AC bar	DC bar	°C	°C						AC W	DC W		
10 mm	11	12	0.72	-	0.2	-	3	-40	90	EPDM	**321K1543**	**2168**	**495294**	12 VDC	-	9	13.0	8242
	11	12	0.72	-	0.2	-	3	-40	90	EPDM	**321K1543**	**2169**	**495294**	24 VDC	-	9	13.0	8242
	11	12	0.72	-	0.2	-	3	-40	90	EPDM	**321K1543**	**2168**	**496193**	12 VDC	-	9	13.0	8242
	11	12	0.72	-	0.2	-	3	-40	90	EPDM	**321K1543**	**2169**	**496193**	24 VDC	-	9	13.0	8242

OTTONE
RACCORDO PORTAGOMMA
NORMALMENTE CHIUSA

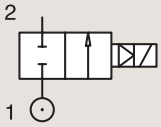

Raccordi	Orifizio Ø	Fattore Portata			Pressione differenziale			Temp. Fluido		Tenuta	Valvola PARKER LUCIFER®			Voltaggio	Potenza		Gruppo Elettrico	Disegno nr.
					Min	Mass		Min	Mass		Valvola	Housing	Bobina					
	mm	Kv l/min	KV m³/h	Qn l/min	bar	AC bar	DC bar	°C	°C						AC W	DC W		
10 mm	11	12	0.72	-	0.2	-	3	-40	90	EPDM	**321K1535**	**2168**	**495294**	12 VDC	-	9	13.0	8241
	11	12	0.72	-	0.2	-	3	-40	90	EPDM	**321K1535**	**2169**	**495294**	24 VDC	-	9	13.0	8241
	11	12	0.72	-	0.2	-	3	-40	90	EPDM	**321K1535**	**2168**	**496193**	12 VDC	-	9	13.0	8241
	11	12	0.72	-	0.2	-	3	-40	90	EPDM	**321K1535**	**2169**	**496193**	24 VDC	-	9	13.0	8241

In questa pagina	Raccordi	Orifizio (mm)	Kv (l/min)	Press. Diff. (bar)	Temp. Fluido (°C)	Temp. Amb. (°C)
da	10 mm	11	12	3	-40	-40
a	10 mm	11	12	3	90	80

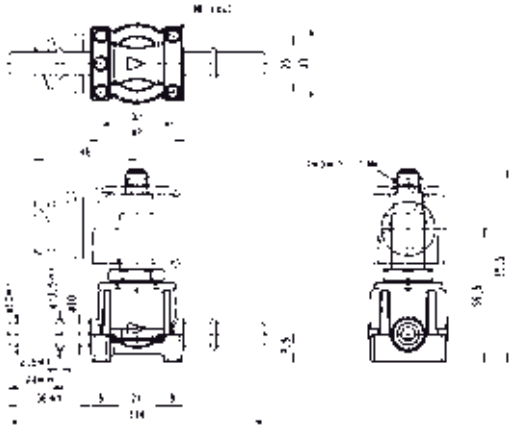

Disegno 8242

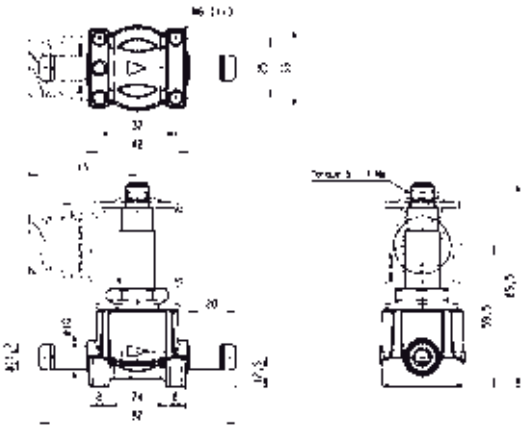

Disegno 8241

2/2 VALVOLE 2/2 TRANSPORTATION

SERVOPILOTATA

OTTONE
MONTAGGIO SU RACCORDI
NORMALMENTE CHIUSA

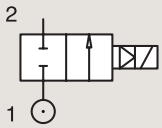

Raccordi	Orifizio Ø	Fattore Portata			Pressione differenziale			Temp. Fluido		Tenuta	Valvola PARKER LUCIFER®			Voltaggio	Potenza		Gruppo Elettrico	Disegno nr.
					Min	Mass		Min	Mass		Valvola	Housing	Bobina					
	mm	Kv l/min	KV m³/h	Qn l/min	bar	AC bar	DC bar	°C	°C						AC W	DC W		
1/2" BSP	11	36	2.16	-	0.2	-	3	-40	90	EPDM	**321K1523**	**2168**	**495294**	12 VDC	-	9	13.0	8238
	11	36	2.16	-	0.2	-	3	-40	90	EPDM	**321K1523**	**2169**	**495294**	24 VDC	-	9	13.0	8238
	11	36	2.16	-	0.2	-	3	-40	90	EPDM	**321K1523**	**2168**	**496193**	12 VDC	-	9	13.0	8238
	11	36	2.16	-	0.2	-	3	-40	90	EPDM	**321K1523**	**2169**	**496193**	24 VDC	-	9	13.0	8238
12.7 mm	11	33	1.98	-	0.2	-	3	-40	90	EPDM	**321K1536**	**2168**	**495294**	12 VDC	-	9	13.0	8282
	11	33	1.98	-	0.2	-	3	-40	90	EPDM	**321K1536**	**2169**	**495294**	24 VDC	-	9	13.0	8282
	11	33	1.98	-	0.2	-	3	-40	90	EPDM	**321K1536**	**2168**	**496193**	12 VDC	-	9	13.0	8282
	11	33	1.98	-	0.2	-	3	-40	90	EPDM	**321K1536**	**2169**	**496193**	24 VDC	-	9	13.0	8282
15.9 mm	11	36	2.16	-	0.2	-	3	-40	90	EPDM	**321K1537**	**2168**	**495294**	12 VDC	-	9	13.0	8281
	11	36	2.16	-	0.2	-	3	-40	90	EPDM	**321K1537**	**2169**	**495294**	24 VDC	-	9	13.0	8281
	11	36	2.16	-	0.2	-	3	-40	90	EPDM	**321K1537**	**2168**	**496193**	12 VDC	-	9	13.0	8281
	11	36	2.16	-	0.2	-	3	-40	90	EPDM	**321K1537**	**2169**	**496193**	24 VDC	-	9	13.0	8281

CE

In questa pagina	Raccordi	Orifizio (mm)	Kv (l/min)	Press. Diff. (bar)	Temp. Fluido (°C)	Temp. Amb. (°C)
da	1/2"	11	33	3	-40	-40
a	15.9 mm	11	36	3	90	80

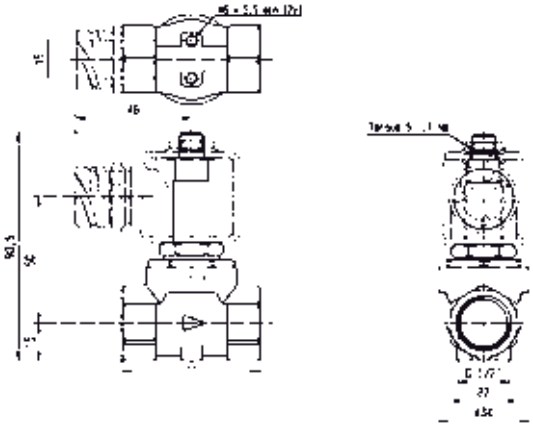

Disegno 8238

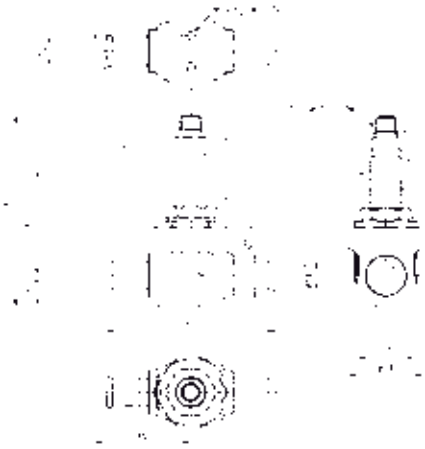

Disegno 8282

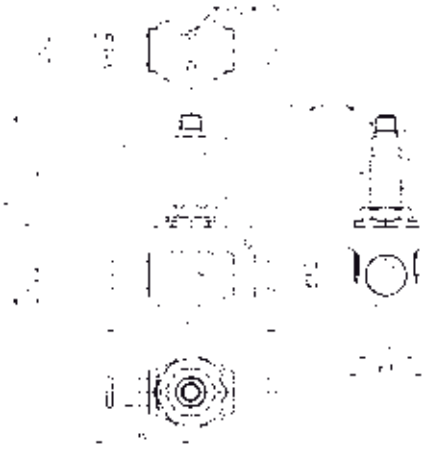

Disegno 8281

VALVOLE 3/2 TRANSPORTATION

3/2

Azionamento	Corpo	Funzione	Raccordi	Orifizio (mm)	Fattore Portata Qn (l/min)	Pressione Differenziale Mass. (Bar)	Temp. Mass. Fluido	Pagina Elettrovalvola Parker	Pagina Elettrovalvola Parker LUCIFER®
Comando diretto	Ottone/Innesti rapidi	Normalmente chiusa	1/8''	1.8	110	8	80	-	272

3/2 VALVOLE 3/2 TRANSPORTATION

COMANDO DIRETTO

OTTONE
INNESTI RAPIDI
NORMALMENTE CHIUSA

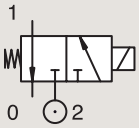

Raccordi	Orifizio Ø		Fattore Portata	Pressione differenziale			Temp. Fluido		Tenuta	Valvola PARKER LUCIFER®			Potenza		Gruppo Elettrico	Disegno nr.
	1	(2)		Min	Mass		Min	Mass		Valvola	Housing	Bobina				
BSP	mm		Qn l/min	bar	AC bar	DC bar	°C	°C					AC W	DC W		
1/8"	1.8	1.5	110	0	-	8	-30	80	TPE/PVDF	**131K0648** 123	**2161**	**495294**	-	9	13.0	7872
	1.8	1.5	110	0	-	8	-30	80	TPE/PVDF	**131K0648** 123	**2161**	**496193**	-	9	13.0	7872

Nota:

1. Gamma di frequenza : da 5 a 20 Hz max
2. Durata : 80 milioni di cicli max
3. Valve disponibile anche con raccordi metrici

In questa pagina	Raccordi	Orifizio (mm)	Qn (l/min)	Press. Diff. (bar)	Temp. Fluido (°C)	Temp. Amb. (°C)
da	1/8''	1.8	110	8	-30	-30
a	1/8''	1.8	110	8	80	85

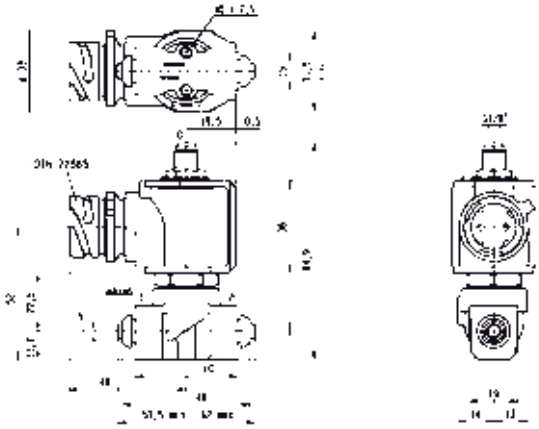

Disegno 7872

DISTRIBUTORI PNEUMATICI 5/2 (MONTAGGIO RACCORDI/SOTTOBASE)

5/2

Azionamento	Corpo	Funzione	Raccordi	Orifizio (mm)	Fattore Portata	Pressione Differenziale Mass. (Bar)	Temp. Mass. Fluido	Pagina Elettrovalvola Parker	Pagina Elettrovalvola Parker LUCIFER®
Servopilotata	Alluminio anodizzato/ Raccordi	Normalmente chiusa	1/8''-1/4''	6	630	10	75	-	276
			1/4''	6 a 14	2500	40	75	-	276
			1/2''	14	2500	15	75	-	278
		Controllo con impulsi elettrici	1/8''-1/4''	6	630	10	75	-	280
			1/4''	8 a 14	2500	15	75	-	280
	Alluminio anodizzato/ Raccordi/Otturatore	Normalmente chiusa	1/8''	4	400	10	75	-	282
		Doppio solenoide	1/8''	4	315	10	75	-	282
	Alluminio anodizzato/ montaggio sottobase	Normalmente chiusa	1/8''	6	630	10	75	-	284
		Controllo con impulsi elettrici	1/8''	6	630	10	75	-	284
	Alluminio anodizzato/ montaggio sottobase/ Poppet	Normalmente chiusa	-	15	5000	10	75	-	286
			1/8''	15	5000	10	75	-	286
			4 mm	4	400	10	75	-	286
		Doppio solenoide	4 mm	4	315	10	75	-	288
		Controllo con impulsi elettrici	-	15	5000	10	75	-	288
	Alluminio anodizzato/ CETOP/Poppet	Doppio solenoide	1/8''	6	800	10	75	-	288
	Lega di Zinco/ Montaggio su raccordi/ Poppet	Normalmente chiusa	1/4''	8	1400	10	75	-	290
		Doppio solenoide	1/4''	8	1400	10	100	-	292
	POM/CETOP/Poppet	Normalmente chiusa	-	6 a 8	800	10	75	-	292
			1/8''	6	800	10	75	-	294
		Controllo con impulsi elettrici	1/8''	6	800	10	75	-	296
Pilotaggio esterno	Alluminio anodizzato/ montaggio sottobase	Normalmente chiusa	1/8''	7	800	10	75	-	298

5/2 DISTRIBUTORI PNEUMATICI 5/2 (MONTAGGIO RACCORDI/SOTTOBASE)

SERVOPILOTATA

Processo

Impianti Industriali

ALLUMINIO ANODIZZATO
MONTAGGIO SU RACCORDI
NORMALMENTE CHIUSA

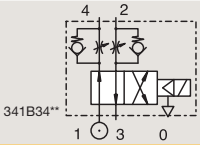

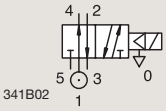

Raccordi BSP	Orifizio Ø 1 mm	Fattore Portata Qn l/min	Pressione differenziale Min bar	Pressione differenziale Mass AC bar	Pressione differenziale Mass DC bar	Temp. Fluido Min °C	Temp. Fluido Mass °C	Tenuta	Valvola PARKER LUCIFER® Valvola	Valvola PARKER LUCIFER® Housing	Valvola PARKER LUCIFER® Bobina	IS	Potenza AC W	Potenza DC W	Gruppo Elettrico	Disegno nr.
1/8"-1/4"	6	630	1	10	10	-10	75	FKM	**341B34 1**	**4270**	**481000**		8	8	2.0	3286
	6	630	1	10	10	-10	75	FKM	**341B34 1**	**2995**	**481865**		8	9	2.0	3286
	6	630	1	10	10	-10	75	FKM	**341B34 1**	**4270**	**486265**		14	14	2.0	3286
	6	630	1	10	10	-10	75	FKM	**341B3403**	**4270**	**481000**		8	8	2.1	3286
	6	630	1	10	10	-10	75	FKM	**341B3403**	**2995**	**481865**		8	9	2.1	3286
	6	560	1	-	10	-10	55	NBR	**341B3490**	**2995**	**483580,01**	*	-	0.5 to 3	7.0/8.0	3561
	6	560	1	-	10	-10	75	NBR	**341B3490**	**-**	**488660,01**	*	-	0.3 to 3	7.0/8.0	3561
	6	560	1	-	10	-10	75	NBR	**341B3490**	**-**	**495910**	*	-	0.3 to 3	7.0/8.0	3561
1/4"	6	630	1	10	10	-25	75	PUR	**341B3440**	**4270**	**481000**		8	8	2.1	3286
	6	630	1	10	10	-25	75	PUR	**341B3440**	**2995**	**481865**		8	9	2.1	3286
	8	640	1	40	40	-10	75	NBR	**341B02 2**	**4270**	**481000**		8	8	2.1	8115
	8	640	1	40	40	-10	75	NBR	**341B02 2**	**2995**	**481865**		8	9	2.1	8115

Nota:

1. Con regolatore di portata
2. Valvola con connessione del tubo di pilotaggio sulla via di scarico

In questa pagina	Raccordi	Orifizio (mm)	Qn (l/min)	Press. Diff. (bar)	Temp. Fluido (°C)	Temp. Amb. (°C)
da	1/8"-1/4"	6	560	10	-25	-25
a	1/4"	8	640	40	75	50

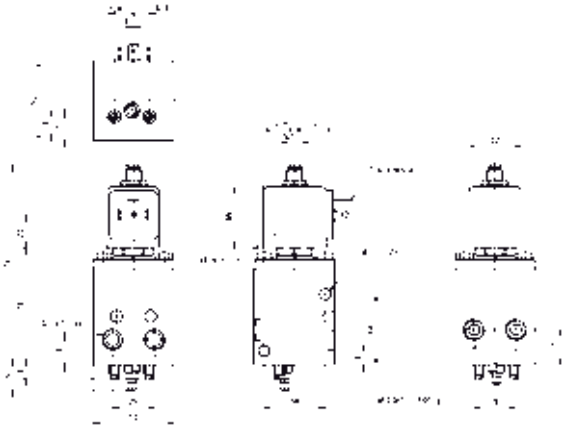

Disegno 3286

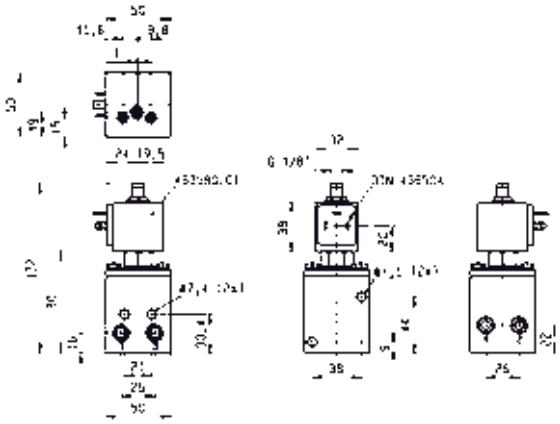

Disegno 3561

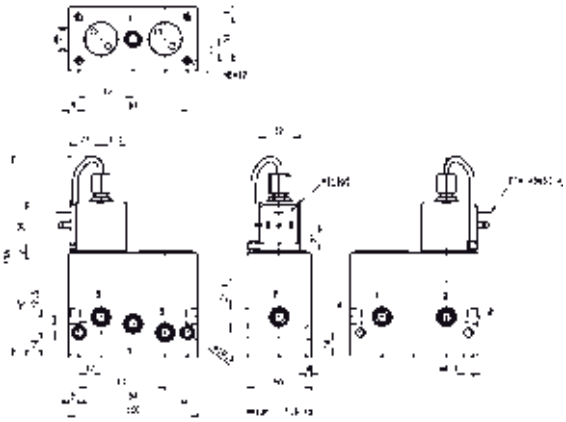

Disegno 8115

5/2 DISTRIBUTORI PNEUMATICI 5/2 (MONTAGGIO RACCORDI/SOTTOBASE)

SERVOPILOTATA

ALLUMINIO ANODIZZATO
MONTAGGIO SU RACCORDI
NORMALMENTE CHIUSA

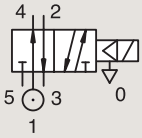

Raccordi	Orifizio Ø	Fattore Portata	Pressione differenziale			Temp. Fluido		Tenuta	Valvola PARKER LUCIFER®			Potenza		Gruppo Elettrico	Disegno nr.
	1		Min	Mass		Min	Mass		Valvola	Housing	Bobina				
BSP	mm	Qn l/min	bar	AC bar	DC bar	°C	°C					AC W	DC W		
1/4"	8	1000	1	15	15	-10	75	NBR	**E341B01**	**2995**	**481865**	8	9	2.1	3309
	8	1000	1	15	15	-10	75	NBR	**E341B01**	**4270**	**485100**	8	8	2.1	3309
	14	2500	2	15	15	-10	75	NBR	**E341F21**	**4270**	**481000**	8	8	2.1	3310
1/2"	14	2500	1	15	15	-10	75	NBR	**E341B21** [1]	**2995**	**481865**	8	9	2.1	3315
	14	2500	1	15	15	-10	75	NBR	**E341B21** [1]	**-**	**483371**	8	8	2.1	3315

Nota:

1. Valvole compatibili unicamente con aria e gas neutri

In questa pagina	Raccordi	Orifizio (mm)	Qn (l/min)	Press. Diff. (bar)	Temp. Fluido (°C)	Temp. Amb. (°C)
da	1/4''	8	1000	15	-10	-10
a	1/2''	14	2500	15	75	50

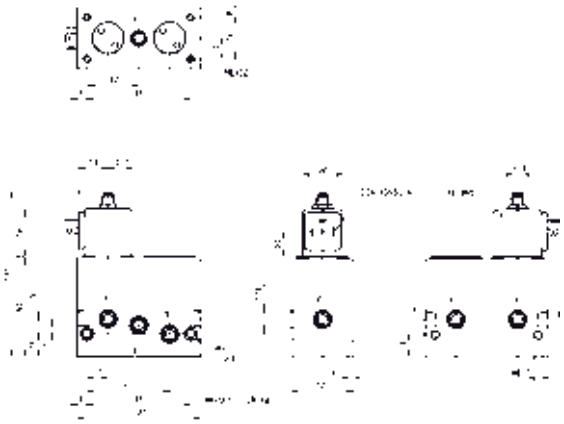

Disegno 3309

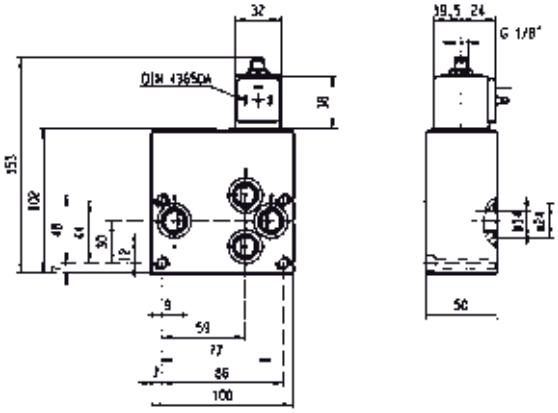

Disegno 3310

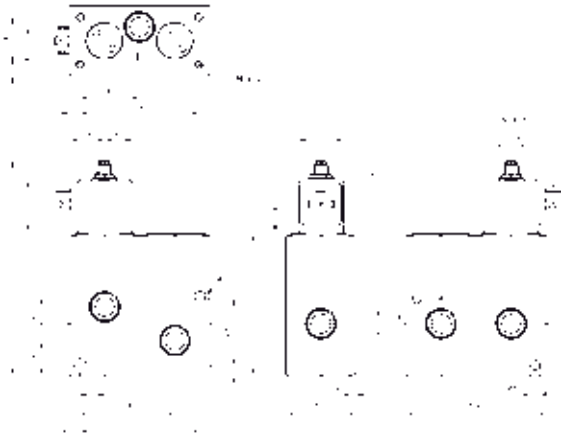

Disegno 3315

5/2 DISTRIBUTORI PNEUMATICI 5/2 (MONTAGGIO RACCORDI/SOTTOBASE)

SERVOPILOTATA

ALLUMINIO ANODIZZATO
MONTAGGIO SU RACCORDI
CONTROLLO CON IMPULSI ELETTRICI

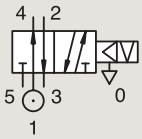

Raccordi	Orifizio Ø	Fattore Portata	Pressione differenziale			Temp. Fluido		Tenuta	Valvola PARKER LUCIFER®			Potenza		Gruppo Elettrico	Disegno nr.
	1		Min	Mass		Min	Mass		Valvola	Housing	Bobina				
BSP	mm	Qn l/min	bar	AC bar	DC bar	°C	°C					AC W	DC W		
1/8''-1/4''	6	630	1	10	-	-10	75	NBR	**345B34 12**	**4269**	**484990**	11	-	4.0	3286
	6	630	1	-	10	-10	75	NBR	**345B34 12**	**4269**	**485400**	-	13	4.0	3286
1/4''	8	1000	1	15	-	-10	75	NBR	**345B04**	**4269**	**484990**	11	-	4.0	3309
	8	1000	1	-	15	-10	75	NBR	**345B04**	**4269**	**485400**	-	13	4.0	3309
	14	2500	1	15	-	-10	75	NBR	**345B24**	**4269**	**484990**	11	-	4.0	3315
	14	2500	1	-	15	-10	75	NBR	**345B24**	**4269**	**485400**	-	13	4.0	3315

Nota:

1. Con regolatore di portata
2. Valvole compatibili unicamente con aria e gas neutri

In questa pagina	Raccordi	Orifizio (mm)	Qn (l/min)	Press. Diff. (bar)	Temp. Fluido (°C)	Temp. Amb. (°C)
da	1/8''-1/4''	6	630	10	-10	-10
a	1/4''	14	2500	15	75	50

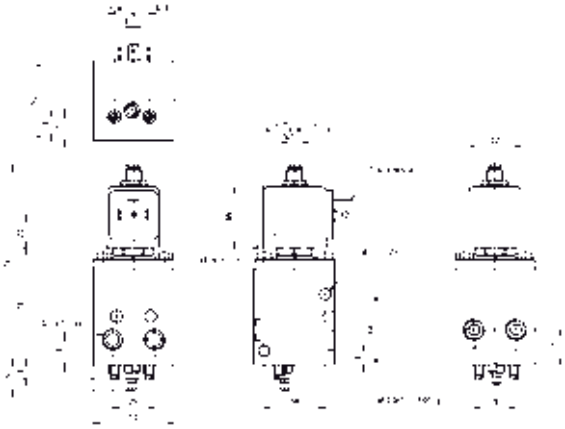

Disegno 3286

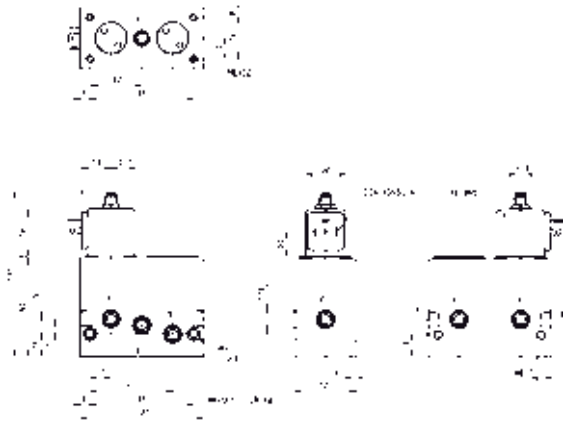

Disegno 3309

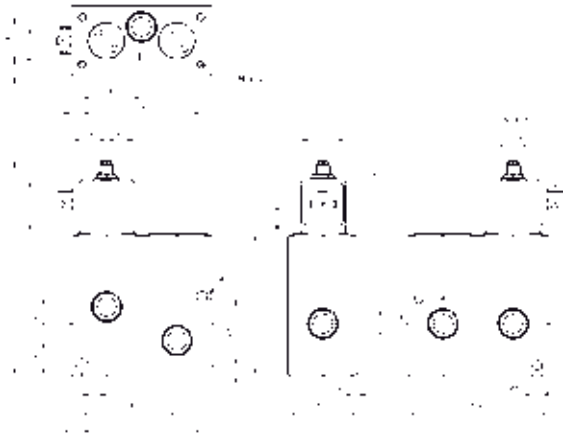

Disegno 3315

5/2 DISTRIBUTORI PNEUMATICI 5/2 (MONTAGGIO RACCORDI/SOTTOBASE)

SERVOPILOTATA

ALLUMINIO ANODIZZATO
MONTAGGIO SU RACCORDI
NORMALMENTE CHIUSA

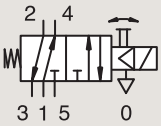

Raccordi	Orifizio Ø	Fattore Portata	Pressione differenziale			Temp. Fluido		Tenuta	Valvola PARKER LUCIFER®			Potenza		Gruppo Elettrico	Disegno nr.
	1		Min	Mass		Min	Mass		Valvola	Housing	Bobina				
BSP	mm	Qn l/min	bar	AC bar	DC bar	°C	°C					AC W	DC W		
1/8"	4	400	1	10	10	-10	75	NBR	**341L9101** [1]	-	**482605**	4	5	1.1	3894
	4	400	1	10	10	-10	75	NBR	**341L9101** [1]	-	**482606**	2	2.5	1.1	3894
	4	400	1	10	10	-10	75	NBR	**341L9101** [1]	**8993**	**488980**	2	2.5	1.1	3894
	4	400	1	10	10	-10	75	NBR	**341L9101** [1]	**8993**	**495865**	2	2.5	1.1	3894

Nota:

1. Con comando manuale

ALLUMINIO ANODIZZATO
MONTAGGIO SU RACCORDI
DOPPIO SOLENOIDE

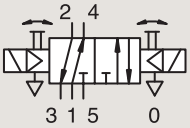

Raccordi	Orifizio Ø	Fattore Portata	Pressione differenziale			Temp. Fluido		Tenuta	Valvola PARKER LUCIFER®			Potenza		Gruppo Elettrico	Disegno nr.
	1		Min	Mass		Min	Mass		Valvola	Housing	Bobina				
BSP	mm	Qn l/min	bar	AC bar	DC bar	°C	°C					AC W	DC W		
1/8"	4	315	2	10	10	-10	75	NBR	**347L9101** [1]	-	**482605**	4	5	1.1	3896
	4	315	2	10	10	-10	75	NBR	**347L9101** [1]	-	**482606**	2	2.5	1.1	3896
	4	315	2	10	10	-10	75	NBR	**347L9101** [1]	**8993**	**488980**	2	2.5	1.1	3896
	4	315	2	10	10	-10	75	NBR	**347L9101** [1]	**8993**	**495865**	2	2.5	1.1	3896

Nota:

1. Con comando manuale

In questa pagina	Raccordi	Orifizio (mm)	Qn (l/min)	Press. Diff. (bar)	Temp. Fluido (°C)	Temp. Amb. (°C)
da	1/8''	4	315	10	-10	-10
a	1/8''	4	400	10	75	50

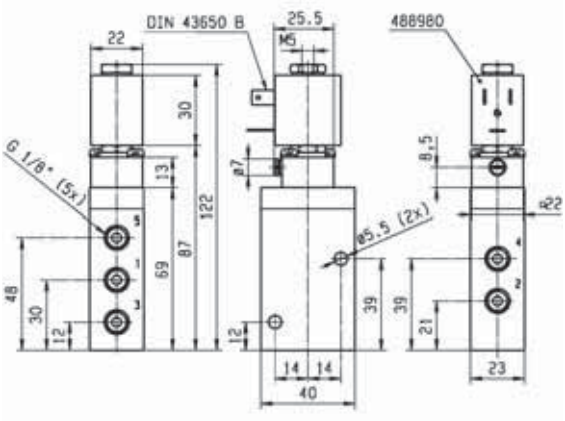

Disegno 3894

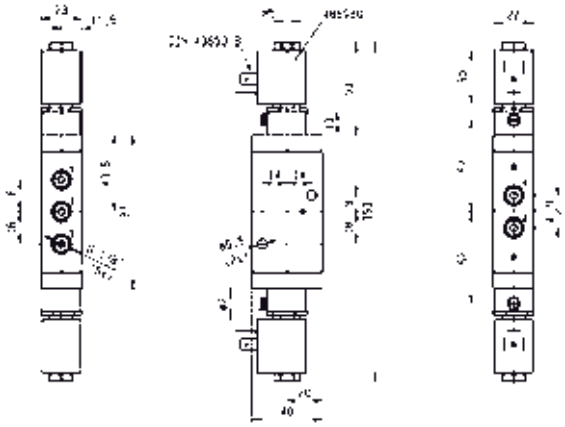

Disegno 3896

5/2 DISTRIBUTORI PNEUMATICI 5/2 (MONTAGGIO RACCORDI/SOTTOBASE)

SERVOPILOTATA

ALLUMINIO ANODIZZATO MONTAGGIO SOTTOBASE

NORMALMENTE CHIUSA

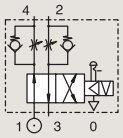

Raccordi	Orifizio Ø 1 mm	Fattore Portata Qn l/min	Pressione differenziale Min bar	Pressione differenziale Mass AC bar	Pressione differenziale Mass DC bar	Temp. Fluido Min °C	Temp. Fluido Mass °C	Tenuta	Valvola PARKER LUCIFER® Valvola	Valvola PARKER LUCIFER® Housing	Valvola PARKER LUCIFER® Bobina	Potenza AC W	Potenza DC W	Gruppo Elettrico	Disegno nr.
SB	6	630	1	10	10	-10	75	FKM	341F34 [1]	2995	481865	8	9	2.1	3287
	6	630	1	10	10	-10	75	FKM	341F34 [1]	4270	481000	8	8	2.1	3287
	6	630	1	10	10	-10	75	FKM	341F3403	2995	481865	8	9	2.1	3287
	6	630	1	10	10	-10	75	FKM	341F3403	4270	481000	8	8	2.1	3287
	6	630	1	10	10	-25	75	NBR	341F3440	2995	481865	8	9	2.1	3287

Nota:

1. Con regolatore di portata

ALLUMINIO ANODIZZATO MONTAGGIO SOTTOBASE

CONTROLLO CON IMPULSI ELETTRICI

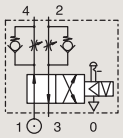

Raccordi	Orifizio Ø 1 mm	Fattore Portata Qn l/min	Pressione differenziale Min bar	Pressione differenziale Mass AC bar	Pressione differenziale Mass DC bar	Temp. Fluido Min °C	Temp. Fluido Mass °C	Tenuta	Valvola PARKER LUCIFER® Valvola	Valvola PARKER LUCIFER® Housing	Valvola PARKER LUCIFER® Bobina	Potenza AC W	Potenza DC W	Gruppo Elettrico	Disegno nr.
SB	6	630	1	10	-	-10	75	FKM	345F34 [1]	4269	484990	11	-	4.0	3287
	6	630	1	-	10	-10	75	FKM	345F34 [1]	4269	485400	-	13	4.0	3287

Nota:

1. Con regolatore di portata

In questa pagina	Raccordi	Orifizio (mm)	Qn (l/min)	Press. Diff. (bar)	Temp. Fluido (°C)	Temp. Amb. (°C)
da	SB	6	630	10	-25	-25
a	SB	6	630	10	75	50

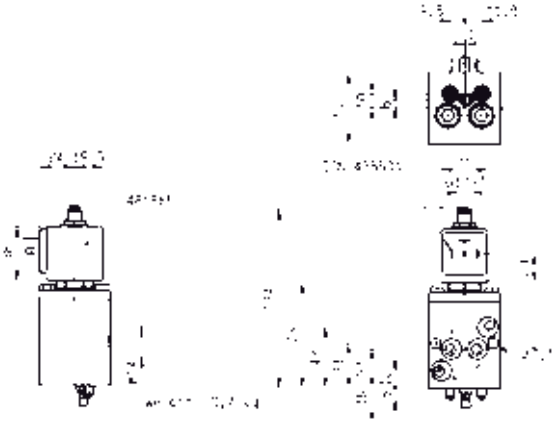

Disegno 3287

5/2 DISTRIBUTORI PNEUMATICI 5/2 (MONTAGGIO RACCORDI/SOTTOBASE)

SERVOPILOTATA

ALLUMINIO ANODIZZATO
MONTAGGIO SOTTOBASE
NORMALMENTE CHIUSA ISO

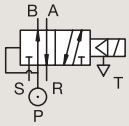

Raccordi	Orifizio Ø 1 mm	Fattore Portata Qn l/min	Pressione differenziale Min bar	Pressione differenziale Mass AC bar	Pressione differenziale Mass DC bar	Temp. Fluido Min °C	Temp. Fluido Mass °C	Tenuta	Valvola PARKER LUCIFER® Valvola	Valvola PARKER LUCIFER® Housing	Valvola PARKER LUCIFER® Bobina	IS	Potenza AC W	Potenza DC W	Gruppo Elettrico	Disegno nr.
	15	5000	0.5	10	10	-10	75	FKM	341L9201 [1]	2995	481865		8	9	2.1/3.0	3299
	15	5000	0.5	10	10	-10	75	FKM	341L9201 [1]	-	495905		8	8	2.1/3.0	3299
	15	5000	0.5	-	10	-10	55	NBR	341L9201 [1]	2995	483580,01	*	-	0.5 to 3	7.0	8271
	15	5000	0.5	-	10	-10	75	NBR	341L9201 [1]	-	488660,01	*	-	0.3 to 3	7.0	8271
	15	5000	0.5	-	10	-10	75	NBR	E341L21 [1]	-	495910	*	-	0.3 to 3	7.0	8271

Nota:

1. Con comando manuale

ALLUMINIO ANODIZZATO
MONTAGGIO SOTTOBASE
NORMALMENTE CHIUSA

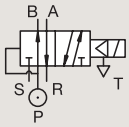

Raccordi	Orifizio Ø 1 mm	Fattore Portata Qn l/min	Pressione differenziale Min bar	Pressione differenziale Mass AC bar	Pressione differenziale Mass DC bar	Temp. Fluido Min °C	Temp. Fluido Mass °C	Tenuta	Valvola PARKER LUCIFER® Valvola	Valvola PARKER LUCIFER® Housing	Valvola PARKER LUCIFER® Bobina	IS	Potenza AC W	Potenza DC W	Gruppo Elettrico	Disegno nr.
SB	4	400	1	10	10	-10	75	NBR	E341L21 [1]	-	482605		-	5	1.1	3895
	4	400	1	10	10	-10	75	NBR	341L2190 [1]	-	482606		2	2.5	1.1	3895
	4	400	1	10	10	-10	75	NBR	341L2190 [1]	8993	488980		2	2.5	1.1	3895
	4	400	1	10	10	-10	75	NBR	341L2190 [1]	8993	495865		2	2.5	1.1	3895

Nota:

1. Con comando manuale

In questa pagina	Raccordi	Orifizio (mm)	Qn (l/min)	Press. Diff. (bar)	Temp. Fluido (°C)	Temp. Amb. (°C)
da	SB	4	400	10	-10	-10
a	SB	15	5000	10	75	50

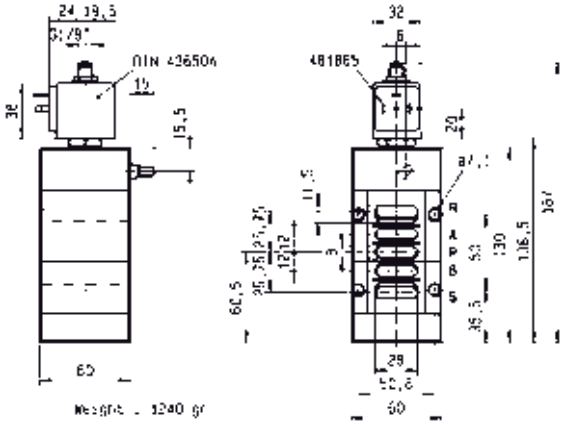

Disegno 3299

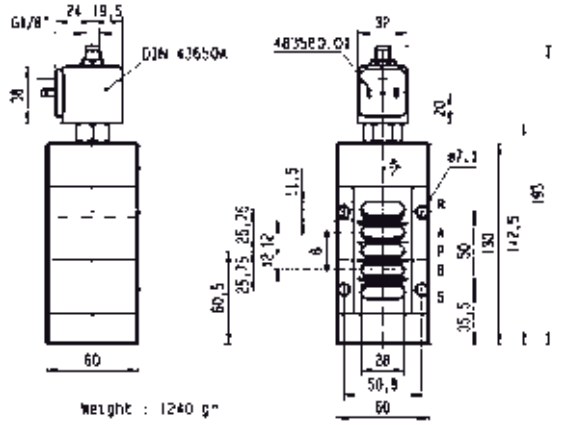

Disegno 8271

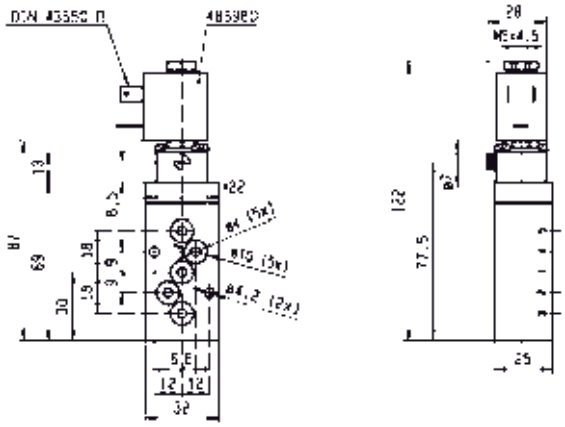

Disegno 3895

5/2 DISTRIBUTORI PNEUMATICI 5/2 (MONTAGGIO RACCORDI/SOTTOBASE)

SERVOPILOTATA

ALLUMINIO ANODIZZATO
MONTAGGIO SOTTOBASE
DOPPIO SOLENOIDE

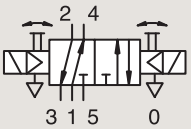

Raccordi	Orifizio Ø 1 mm	Fattore Portata Qn l/min	Pressione differenziale Min bar	Pressione differenziale Mass AC bar	Pressione differenziale Mass DC bar	Temp. Fluido Min °C	Temp. Fluido Mass °C	Tenuta	Valvola PARKER LUCIFER® Valvola	Valvola PARKER LUCIFER® Housing	Valvola PARKER LUCIFER® Bobina	Potenza AC W	Potenza DC W	Gruppo Elettrico	Disegno nr.
SB	4	315	2	10	10	-10	75	NBR	347L9201	-	482605	-	5	1.1	3897
	4	315	2	10	10	-10	75	NBR	347L9201	-	482606	2	2.5	1.1	3897
	4	315	2	10	10	-10	75	NBR	347L9201	8993	488980	2	2.5	1.1	3897
	4	315	2	10	10	-10	75	NBR	347L9201	8993	495865	2	2.5	1.1	3897

ALLUMINIO ANODIZZATO
MONTAGGIO SOTTOBASE
CONTROLLO CON IMPULSI ELETTRICI

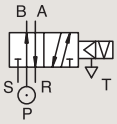

Raccordi	Orifizio Ø 1 mm	Fattore Portata Qn l/min	Pressione differenziale Min bar	Pressione differenziale Mass AC bar	Pressione differenziale Mass DC bar	Temp. Fluido Min °C	Temp. Fluido Mass °C	Tenuta	Valvola PARKER LUCIFER® Valvola	Valvola PARKER LUCIFER® Housing	Valvola PARKER LUCIFER® Bobina	Potenza AC W	Potenza DC W	Gruppo Elettrico	Disegno nr.
SB	15	5000	0.5	10	-	-10	75	NBR	345L21	4269	484990	11	-	4.0	3299
	15	5000	0.5	-	10	-10	75	NBR	345L21	4269	485400	-	13	4.0	3299

POM
CETOP
DOPPIO SOLENOIDE

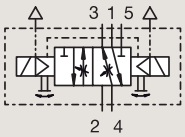

Raccordi BSP	Orifizio Ø 1 mm	Fattore Portata Qn l/min	Pressione differenziale Min bar	Pressione differenziale Mass AC bar	Pressione differenziale Mass DC bar	Temp. Fluido Min °C	Temp. Fluido Mass °C	Tenuta	Valvola PARKER LUCIFER® Valvola	Valvola PARKER LUCIFER® Housing	Valvola PARKER LUCIFER® Bobina	Potenza AC W	Potenza DC W	Gruppo Elettrico	Disegno nr.
1/8"	6	800	1	10	10	-10	75	NBR	347L04	8993	488980	2	2.5	1.1	3694

In questa pagina	Raccordi	Orifizio (mm)	Qn (l/min)	Press. Diff. (bar)	Temp. Fluido (°C)	Temp. Amb. (°C)
da	SB	4	315	10	-10	-10
a	SB	15	5000	10	75	50

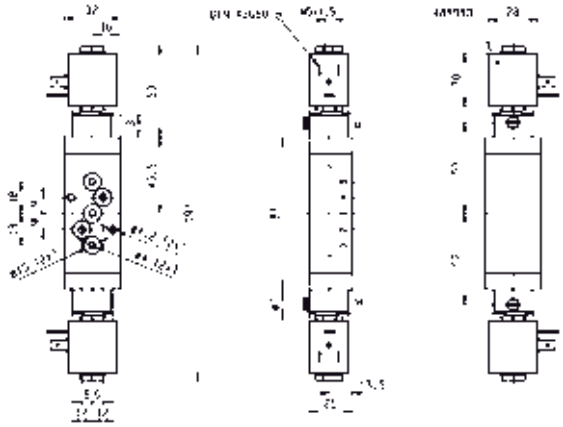

Disegno 3897

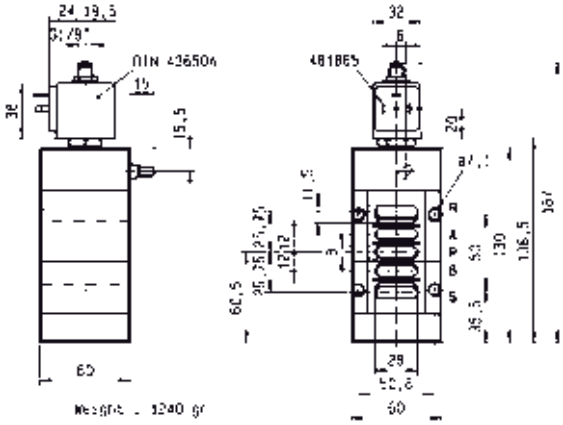

Disegno 3299

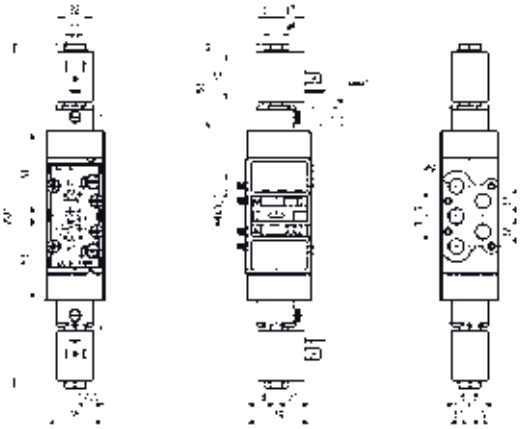

Disegno 3694

5/2 DISTRIBUTORI PNEUMATICI 5/2 (MONTAGGIO RACCORDI/SOTTOBASE)

SERVOPILOTATA

LEGA DI ZINCO
MONTAGGIO SU RACCORDI
NORMALMENTE CHIUSA

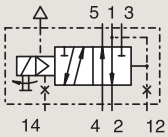

Raccordi	Orifizio Ø	Fattore Portata	Pressione differenziale			Temp. Fluido		Tenuta	Valvola PARKER LUCIFER®			Potenza		Gruppo Elettrico	Disegno nr.
	1		Min	Mass		Min	Mass		Valvola	Housing	Bobina				
BSP	mm	Qn l/min	bar	AC bar	DC bar	°C	°C					AC W	DC W		
1/4''	8	1400	1	10	10	-10	75	NBR	**341L11**	**-**	**482605**	4	5	1.1	3434
	8	1400	1	10	10	-10	75	NBR	**341L11**	**-**	**482606**	2	2.5	1.1	3434
	8	1400	1	10	10	-10	75	NBR	**341L11**	**8993**	**488980**	2	2.5	1.1	3434
	8	1400	1	10	10	-10	75	NBR	**341L11**	**8993**	**495865**	2	2.5	1.1	3434
	8	1400	1	10	10	-10	75	NBR	**E341L1130**	**2995**	**481865**	8	9	2.1/3.0	3539
	8	1400	1	10	10	-10	75	NBR	**E341L1130**	**-**	**483371**	8	8	2.1/3.0	3539
1/4" NPT	8	1400	1	10	10	-10	75	FKM	**U341L1130**	**2995**	**481865**	8	9	2.1	8297

In questa pagina	Raccordi	Orifizio (mm)	Qn (l/min)	Press. Diff. (bar)	Temp. Fluido (°C)	Temp. Amb. (°C)
da	1/4''	8	1400	10	-10	-10
a	1/4''	8	1400	10	75	50

Disegno 3434

Disegno 3539

Disegno 8297

5/2 DISTRIBUTORI PNEUMATICI 5/2 (MONTAGGIO RACCORDI/SOTTOBASE)

SERVOPILOTATA

LEGA DI ZINCO
MONTAGGIO SU RACCORDI
DOPPIO SOLENOIDE

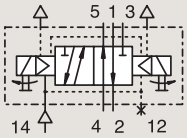

Raccordi	Orifizio Ø	Fattore Portata	Pressione differenziale			Temp. Fluido		Tenuta	Valvola PARKER LUCIFER®			Potenza		Gruppo Elettrico	Disegno nr.
	1		Min	Mass		Min	Mass		Valvola	Housing	Bobina				
BSP	mm	Qn l/min	bar	AC bar	DC bar	°C	°C					AC W	DC W		
1/4"	8	1400	1	10	10	-10	75	NBR	**347L11** [1]	-	**482605**	4	5	1.1	3461
	8	1400	1	10	10	-10	75	NBR	**347L11** [1]	-	**482606**	2	2.5	1.1	3461
	8	1400	1	10	10	-10	75	NBR	**347L11** [1]	**8993**	**488980**	2	2.5	1.1	3461
	8	1400	1	10	10	-10	75	NBR	**347L11** [1]	**8993**	**495865**	2	2.5	1.1	3461
	8	1400	2	10	10	-10	100	FKM	**E347L1130** [1]	**2995**	**481865**	8	9	2.1/3.0	3541
	8	1400	2	10	10	-10	100	FKM	**E347L1130** [1]	**4270**	**481000**	8	8	2.1/3.0	3541

Nota:

1. Con comando manuale

POM
CETOP
NORMALMENTE CHIUSA

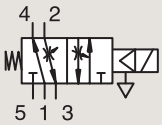

Raccordi	Orifizio Ø	Fattore Portata	Pressione differenziale			Temp. Fluido		Tenuta	Valvola PARKER LUCIFER®			Potenza		Gruppo Elettrico	Disegno nr.
	1		Min	Mass		Min	Mass		Valvola	Housing	Bobina				
	mm	Qn l/min	bar	AC bar	DC bar	°C	°C					AC W	DC W		
-	6	800	1	10	10	-10	75	FKM	**E341L02**	**2995**	**481865**	8	9	2.1/3.0	3513
	6	800	1	10	10	-10	75	FKM	**E341L02**	**4270**	**481000**	8	8	2.1/3.0	3513

In questa pagina	Raccordi	Orifizio (mm)	Qn (l/min)	Press. Diff. (bar)	Temp. Fluido (°C)	Temp. Amb. (°C)
da	1/4''	6	800	10	-10	-10
a	1/4''	8	1400	10	100	50

Disegno 3461

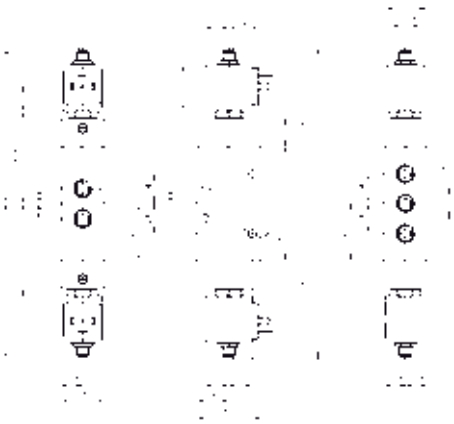

Disegno 3541

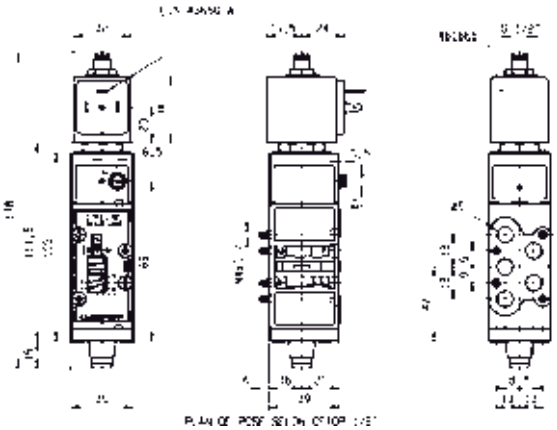

Disegno 3513

5/2 DISTRIBUTORI PNEUMATICI 5/2 (MONTAGGIO RACCORDI/SOTTOBASE)

SERVOPILOTATA

POM

CETOP

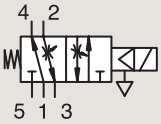

NORMALMENTE CHIUSA

Raccordi	Orifizio Ø	Fattore Portata	Pressione differenziale			Temp. Fluido		Tenuta	Valvola PARKER LUCIFER®			IS	Potenza		Gruppo Elettrico	Disegno nr.
	1		Min	Mass		Min	Mass		Valvola	Housing	Bobina					
BSP	mm	Qn l/min	bar	AC bar	DC bar	°C	°C						AC W	DC W		
-	8	800	1	10	10	-10	75	FKM	341L04 [1]	-	482605		4	5	1.1	3437
	8	800	1	10	10	-10	75	FKM	341L04 [1]	-	482606		2	2.5	1.1	3437
	8	800	1	10	10	-10	75	FKM	341L04 [1]	8993	488980		2	2.5	1.1	3437
	8	800	1	10	10	-10	75	FKM	341L04 [1]	8993	495865		2	2.5	1.1	3437
1/8"	6	800	1	-	10	-10	75	NBR	341L0197	2995	482740		-	1.6	6.0/8.0	8021
	6	800	1	10	10	-10	75	NBR	341L0197	-	495900		2.5	2	6.0/8.0	8021
	6	800	1	-	10	-10	75	NBR	341L0197	-	495910	*	-	0.3 to 3	6.0/8.0	8021
	6	800	1	-	10	-10	75	NBR	341L0197	2995	496125		-	1.6	6.0/8.0	8021
	6	800	1	10	10	-10	75	NBR	341L05 [2]	-	482605		4	5	1.1	3430
	6	800	1	10	10	-10	75	NBR	341L05 [2]	-	482606		2	2.5	1.1	3430
	6	800	1	10	10	-10	75	NBR	341L05 [2]	8993	488980		2	2.5	1.1	3430
	6	800	1	10	10	-10	75	NBR	341L05 [2]	8993	495865		2	2.5	1.1	3430
	6	800	1	10	-	-10	75	FKM	E341L01 [1]	2995	482722		10	-	2.1/3.0	3255
	6	800	1	10	10	-10	75	FKM	E341L01 [1]	-	483371		8	8	2.1/3.0	3255
	6	800	1	10	10	-10	75	FKM	E341L01 [1]	2995,33	491514		11	12	2.1/3.0	3255

Nota:

1. Comando manuale e vite regolazione portata standard
2. Con comando manuale

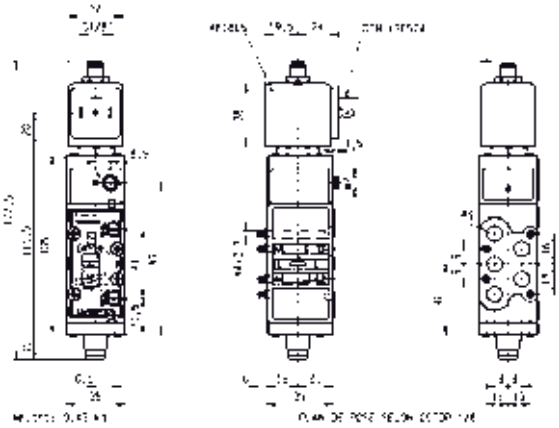

Disegno 3255

In questa pagina	Raccordi	Orifizio (mm)	Qn (l/min)	Press. Diff. (bar)	Temp. Fluido (°C)	Temp. Amb. (°C)
da	1/8''	6	800	10	-10	-20
a	1/8''	8	800	10	75	50

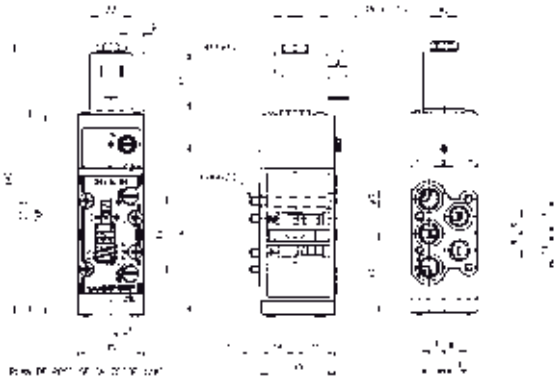

Disegno 3437

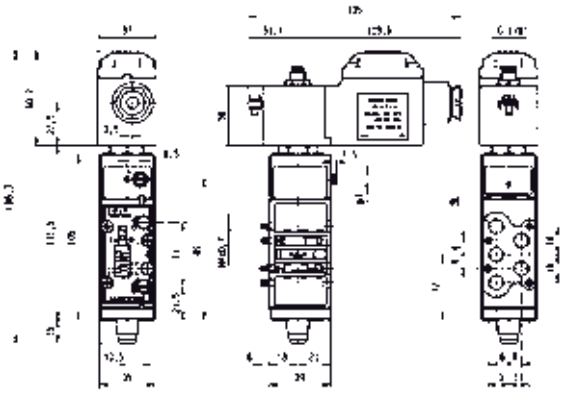

Disegno 8021

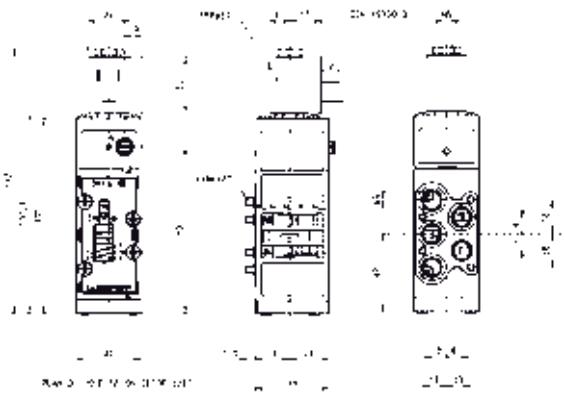

Disegno 3430

5/2 DISTRIBUTORI PNEUMATICI 5/2 (MONTAGGIO RACCORDI/SOTTOBASE)

SERVOPILOTATA

POM
CETOP
CONTROLLO CON IMPULSI ELETTRICI

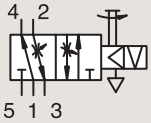

Raccordi	Orifizio Ø	Fattore Portata	Pressione differenziale			Temp. Fluido		Tenuta	Valvola PARKER LUCIFER®			Potenza		Gruppo Elettrico	Disegno nr.
	1		Min	Mass		Min	Mass		Valvola	Housing	Bobina				
BSP	mm	Qn l/min	bar	AC bar	DC bar	°C	°C					AC W	DC W		
1/8"	6	800	1	-	10	-10	75	FKM	345L01 [1]	4269	485400	-	13	4.0	3255

Nota:

1. Comando manuale e vite regolazione portata standard

In questa pagina	Raccordi	Orifizio (mm)	Qn (l/min)	Press. Diff. (bar)	Temp. Fluido (°C)	Temp. Amb. (°C)
da	1/8''	6	800	10	-10	-10
a	1/8''	6	800	10	75	50

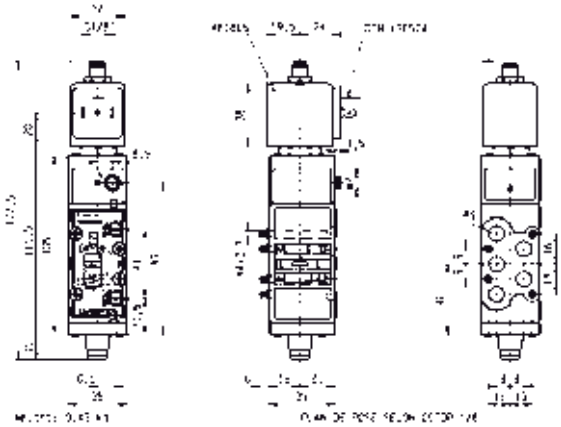

Disegno 3255

5/2 DISTRIBUTORI PNEUMATICI 5/2 (MONTAGGIO RACCORDI/SOTTOBASE)

PILOTAGGIO ESTERNO

Processo

Impianti Industriali

POM
CETOP
NORMALMENTE CHIUSA

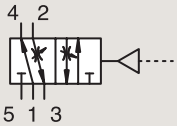

Raccordi	Orifizio Ø	Fattore Portata	Pressione differenziale			Temp. Fluido		Tenuta	Valvola PARKER LUCIFER®			Potenza		Gruppo Elettrico	Disegno nr.
	1		Min	Mass		Min	Mass		Valvola	Housing	Bobina				
	mm	Qn l/min	bar	AC bar	DC bar	°C	°C					AC W	DC W		
SB	7	800	1	10	10	-10	75	FKM/NBR	**541L01**	**-**	**-**	-	-	-	3254

In questa pagina	Raccordi	Orifizio (mm)	Qn (l/min)	Press. Diff. (bar)	Temp. Fluido (°C)	Temp. Amb. (°C)
da	1/8''	7	800	10	-10	-10
a	1/8''	7	800	10	75	50

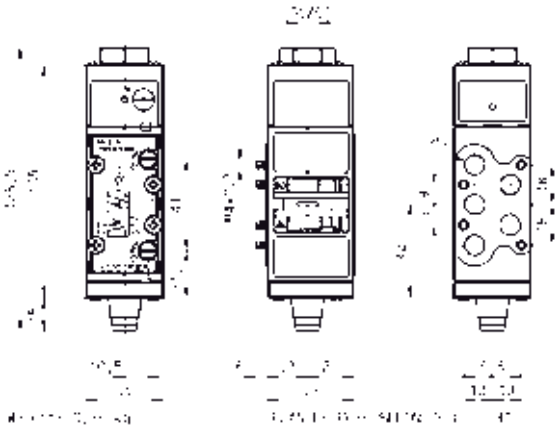

Disegno 3254

DISTRIBUTORI PNEUMATICHE 3/2 E 5/2 PER IL CONTROLLO ATTUATORI (MONTAGGIO SU RACCORDI)

3/2
5/2

Azionamento	Corpo	Funzione	Raccordi	Orifizio (mm)	Fattore Portata	Pressione Differenziale Mass. (Bar)	Temp. Mass. Fluido	Pagina Elettrovalvola Parker	Pagina Elettrovalvola Parker LUCIFER®
Comando diretto	Ottone/Raccordi	Normalmente chiusa	1/8''	1.2 a 1.5	70	10	75	-	302
			1/8''-1/4''	2.5	220	7	75	-	302
			1/4''	1 a 4.5	500	16	120	-	302
		Normalmente aperta	1/4''	2.5	220	7	75	-	308
		Universale	1/4''	6	680	10	75	-	308
		Controllo con impulsi elettrici	1/4''	2.5	220	7	100	-	310
	Ottone/Sottobase	Normalmente chiusa	5 mm	2.5	180	2	75	-	312
		Universale	1/8''	2	140	7	120	-	312
	Alluminio anodizzato/ Raccordi	Universale	1/4''	6	680	10	80	-	314
Servopilotata	Alluminio anodizzato/ Raccordi/Spoll	Normalmente chiusa	1/8''	4 a 15	600	10	80	-	316
			1/4''	7 a 8	1400	10	80	-	318
			1/2''	12	3000	10	50	-	322
		Doppio solenoide	1/8''	4	400	10	80	-	324
			1/4''	7 a 8	1400	10	80	-	326
			1/2''	12	3000	10	50	-	328
		Controllo con impulsi elettrici	1/8''	4	600	10	80	-	328
Riarmo manuale	Ottone/Raccordi	Universale	1/4''	6	680	10	65	-	330

3/2 VALVOLE PNEUMATICHE 3/2 E 5/2 PER IL CONTROLLO ATTUATORI (MONTAGGIO SU RACCORDI)

COMANDO DIRETTO

Impianti Commerciali

Impianti Industriali

Processo

OTTONE
MONTAGGIO SU RACCORDI
NORMALMENTE CHIUSA

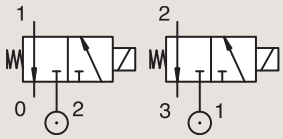

Raccordi	Orifizio Ø	Fattore Portata	Pressione differenziale			Temp. Fluido		Tenuta	Valvola PARKER LUCIFER®			Zona ATEX	Modo di Protezione	Potenza		Gruppo Elettrico	Disegno nr.
	1		Min	Mass		Min	Mass		Valvola	Housing	Bobina						
BSP	mm	Qn l/min	bar	AC bar	DC bar	°C	°C							AC W	DC W		
1/8"	1.2	50	0	10	10	-10	75	FKM	**131M15**	**8993**	**488980**	-	-	2	2.5	1.1	3382
	1.5	70	0	7	7	-10	75	FKM	**131M14**	**8993**	**488980**	-	-	2	2.5	1.1	3382
1/8"-1/4"	2.5	220	0	7	7	-40	75	PUR	**E131K0358**[1]	**2995**	**481865**	-	-	8	9	2.1	3510
	2.5	220	0	7	7	-40	75	PUR	**E131K0358**[1]	**4270**	**481000**	-	-	8	8	2.1	3510
1/4"	1	36	0	-	10	-10	55	FKM	**131K0490**	**2995**	**483580,01**	0-20	Ex ia IIC T6	-	0.5 to 3	7.0/8.0	7058
	1	36	0	-	10	-10	75	FKM	**131K0490**	**-**	**488660,01**	0-20	Ex ia IIC T6	-	0.3 to 3	7.0/8.0	7058
	1	36	0	-	10	-10	75	FKM	**131K0490**	**-**	**495910**	0-20	Ex ia IIC T4 to T6	-	0.3 to 3	7.0/8.0	7058

Nota:

1. Con comando manuale

In questa pagina	Raccordi	Orifizio (mm)	Qn (l/min)	Press. Diff. (bar)	Temp. Fluido (°C)	Temp. Amb. (°C)
da	1/8"	1	36	7	-40	-40
a	1/4"	2.5	220	10	75	50

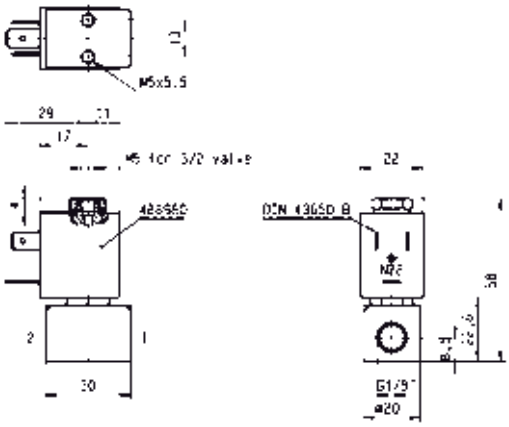

Disegno 3382

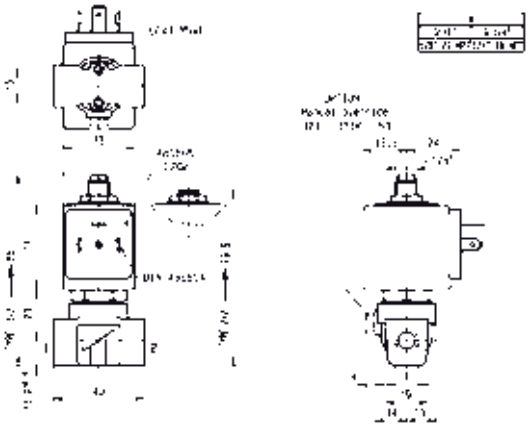

Disegno 3510

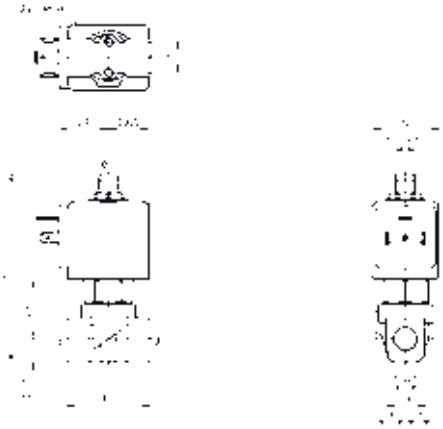

Disegno 7058

3/2

VALVOLE PNEUMATICHE 3/2 E 5/2 PER IL CONTROLLO ATTUATORI (MONTAGGIO SU RACCORDI)

COMANDO DIRETTO

OTTONE

MONTAGGIO SU RACCORDI

NORMALMENTE CHIUSA

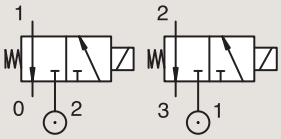

Raccordi BSP	Orifizio Ø 1 mm	Fattore Portata Qn l/min	Pressione differenziale Min bar	Pressione differenziale Mass AC bar	Pressione differenziale Mass DC bar	Temp. Fluido Min °C	Temp. Fluido Mass °C	Tenuta	Valvola PARKER LUCIFER® Valvola	Valvola PARKER LUCIFER® Housing	Valvola PARKER LUCIFER® Bobina	Zona ATEX	Modo di Protezione	Potenza AC W	Potenza DC W	Gruppo Elettrico	Disegno nr.
1/4"	1.5	80	0	-	7	-20	75	PUR	**131K0497**	**2995**	**482740**	-	-	-	1.6	6.0/8.0	8023
	1.5	80	0	7	7	-20	75	PUR	**131K0497**	**-**	**495900**	1-21	Ex db mb IIC T4 to T6	2.5	2	6.0/8.0	8023
	1.5	80	0	-	7	-20	75	PUR	**131K0497**	**-**	**495910**	0-20	Ex ia IIC T4 to T6	-	0.3 to 3	6.0/8.0	8023
	1.5	80	0	-	7	-20	75	PUR	**131K0497**	**2995**	**496125**	2-22	Ex nAC nCc IIC T5/T6	-	1.6	6.0/8.0	8023
	1.5	80	0	16	16	-10	100	FKM	**E131K04**	**2995**	**481865**	-	-	8	9	2.0	3510
	1.5	80	0	16	16	-10	120	FKM	**E131K04**	**4270**	**481000**	-	-	8	8	2.0	3510
	1.5	80	0	16	16	-10	120	FKM	**E131K04**	**4270**	**486265**	-	-	14	14	2.0	3510
	1.5	80	0	15	15	-10	100	FKM	**E131K0450** [1]	**2995**	**481865**	-	-	8	9	2.1	3510
	1.5	80	0	15	15	-10	120	FKM	**E131K0450** [1]	**4270**	**481000**	-	-	8	8	2.1	3510
	2	140	0	10	10	-10	100	FKM	**E131K06**	**2995**	**481865**	-	-	8	9	2.0	8119
	2	140	0	10	10	-10	120	FKM	**E131K06**	**4270**	**481000**	-	-	8	8	2.0	8119
	2	140	0	10	10	-10	120	FKM	**E131K06**	**4270**	**486265**	-	-	14	14	2.0	8119
	2	140	0	10	10	-10	100	FKM	**E131K0650** [1]	**2995**	**481865**	-	-	8	9	2.1	3510
	2	140	0	10	10	-10	120	FKM	**E131K0650** [1]	**4270**	**481000**	-	-	8	8	2.1	3510

Nota:

1. Con comando manuale

In questa pagina	Raccordi	Orifizio (mm)	Qn (l/min)	Press. Diff. (bar)	Temp. Fluido (°C)	Temp. Amb. (°C)
da	1/4"	1.5	80	7	-20	-20
a	1/4"	2	140	16	120	50

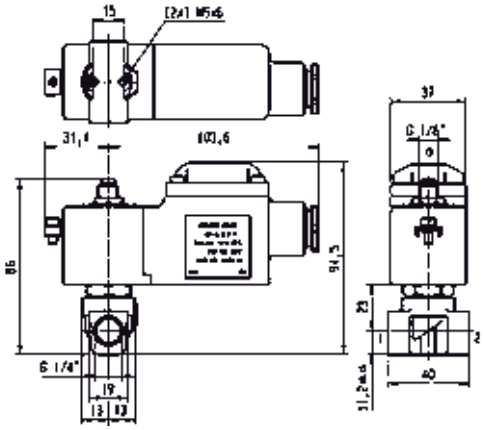

Disegno 8023

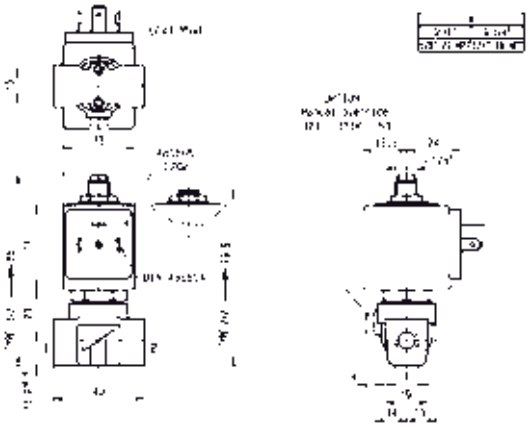

Disegno 3510

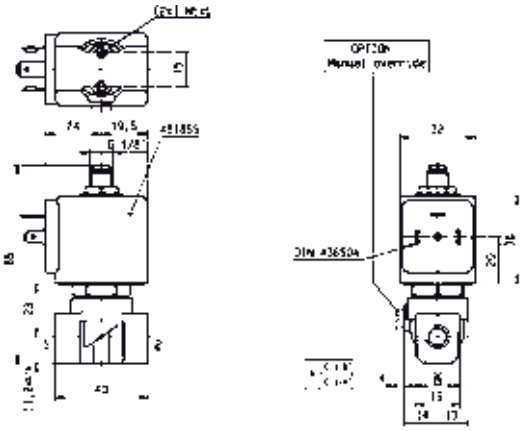

Disegno 8119

3/2 VALVOLE PNEUMATICHE 3/2 E 5/2 PER IL CONTROLLO ATTUATORI (MONTAGGIO SU RACCORDI)

COMANDO DIRETTO

OTTONE
MONTAGGIO SU RACCORDI
NORMALMENTE CHIUSA

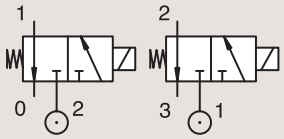

Raccordi	Orifizio Ø	Fattore Portata	Pressione differenziale			Temp. Fluido		Tenuta	Valvola PARKER LUCIFER®			Zona ATEX	Modo di Protezione	Potenza		Gruppo Elettrico	Disegno nr.
	1		Min	Mass		Min	Mass		Valvola	Housing	Bobina						
BSP	mm	Qn l/min	bar	AC bar	DC bar	°C	°C							AC W	DC W		
1/4''	2.5	220	0.1	7	7	-10	75	FKM	**E131E03** [2]	**2995**	**481865**	-	-	8	9	2.0	3525
	2.5	220	0.1	7	7	-10	75	FKM	**E131E03** [2]	**4270**	**481000**	-	-	8	8	2.0	3525
	2.5	220	0.1	7	7	-10	75	FKM	**E131E03** [2]	**4270**	**486265**	-	-	14	14	2.0	3525
	2.5	220	0	7	7	-40	75	PUR	**E131K0308**	**2995**	**481865**	-	-	8	9	2.1	3510
	2.5	220	0	7	7	-40	75	PUR	**E131K0308**	**4270**	**481000**	-	-	8	8	2.1	3510
	2.5	220	0	7	7	-10	100	FKM	**E131K0350** [1]	**2995**	**481865**	-	-	8	9	2.1	3510
	2.5	220	0	7	7	-10	120	FKM	**E131K0350** [1]	**4270**	**481000**	-	-	8	8	2.1	3510
	4.5	500	0	2	2	-10	75	FKM	**131T2101** [1]	**2995**	**481865**	-	-	8	9	2.1	3223
	4.5	500	0	2	2	-10	75	FKM	**131T2101** [1]	**4270**	**481000**	-	-	8	8	2.1	3223

Nota:

1. Con comando manuale
2. Rapido scarico

In questa pagina	Raccordi	Orifizio (mm)	Qn (l/min)	Press. Diff. (bar)	Temp. Fluido (°C)	Temp. Amb. (°C)
da	1/4"	2.5	220	2	-40	-40
a	1/4"	4.5	500	7	120	50

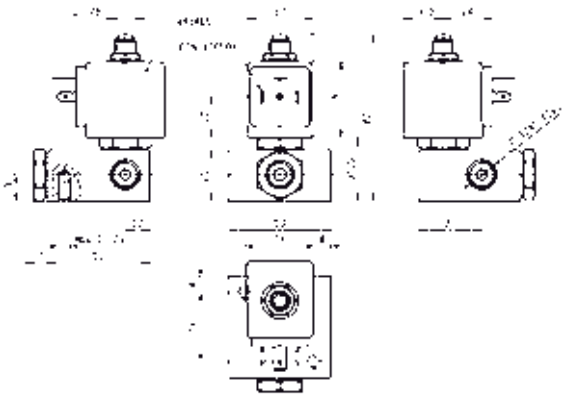

Disegno 3525

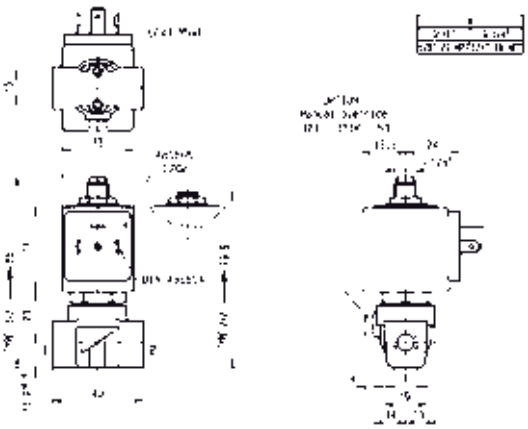

Disegno 3510

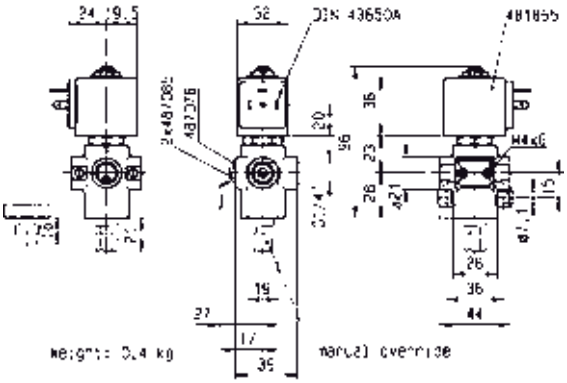

Disegno 3223

3/2

VALVOLE PNEUMATICHE 3/2 E 5/2 PER IL CONTROLLO ATTUATORI (MONTAGGIO SU RACCORDI)

COMANDO DIRETTO

OTTONE
MONTAGGIO SU RACCORDI
NORMALMENTE APERTA

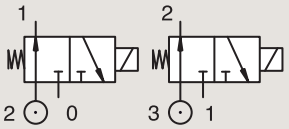

Raccordi	Orifizio Ø	Fattore Portata	Pressione differenziale			Temp. Fluido		Tenuta	Valvola PARKER LUCIFER®			Zona ATEX	Modo di Protezione	Potenza		Gruppo Elettrico	Disegno nr.
	1		Min	Mass		Min	Mass		Valvola	Housing	Bobina						
BSP	mm	Qn l/min	bar	AC bar	DC bar	°C	°C							AC W	DC W		
1/4"	2.5	220	0	7	3.5	-10	75	FKM	132T29	2995	481865	-	-	8	9	2.0	3223
	2.5	220	0	7	3.5	-10	75	FKM	132T29	4270	481000	-	-	8	8	2.0	3223
	2.5	220	0	-	7	-10	75	FKM	132T29	4270	486265	-	-	-	14	2.0	3223

OTTONE
MONTAGGIO SU RACCORDI
UNIVERSALE

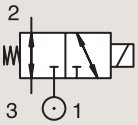

Raccordi	Orifizio Ø	Fattore Portata	Pressione differenziale			Temp. Fluido		Tenuta	Valvola PARKER LUCIFER®			Zona ATEX	Modo di Protezione	Potenza		Gruppo Elettrico	Disegno nr.
	1		Min	Mass		Min	Mass		Valvola	Housing	Bobina						
	mm	Qn l/min	bar	AC bar	DC bar	°C	°C							AC W	DC W		
1/4" NPT	6	680	0	10	10	-25	65	NBR	U133X0111	-	492310	1-21	Ex eb mb II T3 to T6	6	6	9.0/10.1/10.2	7422
	6	680	0	-	10	-25	75	NBR	U133X0111	-	492965,01	0-20	Ex ia IIC T6	-	0.3 to 3	9.0/10.1/10.2	7422
	6	680	0	10	10	-25	65	NBR	U133X01111D[1]	-	483270	1-21	Ex db IIC T4 to T6	8	8	11.0	7438

Nota:

1. Utilizzo esclusivo in DC. Minima caduta di tensione 15% del voltaggio nominale (vecchia DIN19251)

In questa pagina	Raccordi	Orifizio (mm)	Qn (l/min)	Press. Diff. (bar)	Temp. Fluido (°C)	Temp. Amb. (°C)
da	1/4"	2.5	220	3.5	-25	-25
a	1/4"	6	680	10	75	50

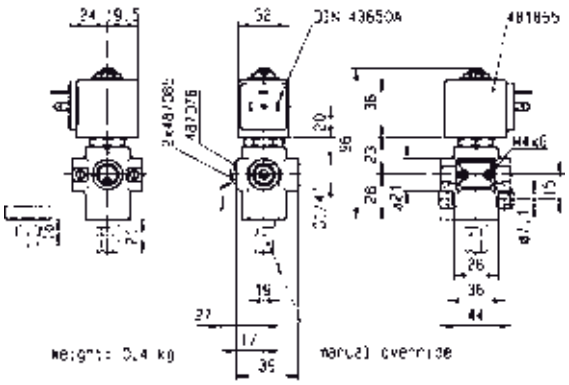

Disegno 3223

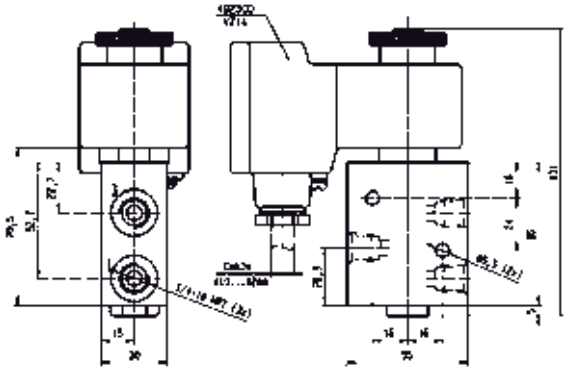

Disegno 7422

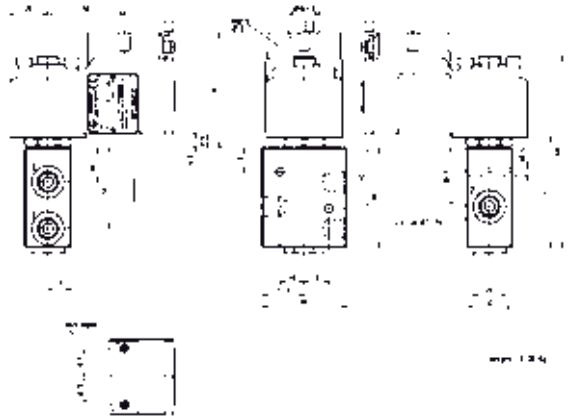

Disegno 7438

3/2 VALVOLE PNEUMATICHE 3/2 E 5/2 PER IL CONTROLLO ATTUATORI (MONTAGGIO SU RACCORDI)

COMANDO DIRETTO

OTTONE
MONTAGGIO SU RACCORDI
UNIVERSALE

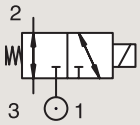

Raccordi	Orifizio Ø 1 mm	Fattore Portata Qn l/min	Pressione differenziale Min bar	Pressione differenziale Mass AC bar	Pressione differenziale Mass DC bar	Temp. Fluido Min °C	Temp. Fluido Mass °C	Tenuta	Valvola PARKER LUCIFER® Valvola	Valvola PARKER LUCIFER® Housing	Valvola PARKER LUCIFER® Bobina	Zona ATEX	Modo di Protezione	Potenza AC W	Potenza DC W	Gruppo Elettrico	Disegno nr.
1/4" NPT	6	680	0	-	10	-25	65	NBR	**U133X0131** [1]	**-**	**492310**	1-21	Ex eb mb II T3 to T6	-	6	10.1/10.2	8280
	6	680	0	-	10	-25	65	NBR	**U133X0131** [1]	**-**	**496700**	1-21	Ex db mb IIC T4 to T6	-	6	10.1/10.2	8280

Nota:

1. Utilizzo esclusivo in DC. Minima caduta di tensione 15% del voltaggio nominale (vecchia DIN19251)

OTTONE
MONTAGGIO SU RACCORDI
CONTROLLO CON IMPULSI ELETTRICI

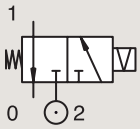

Raccordi BSP	Orifizio Ø 1 mm	Fattore Portata Qn l/min	Pressione differenziale Min bar	Pressione differenziale Mass AC bar	Pressione differenziale Mass DC bar	Temp. Fluido Min °C	Temp. Fluido Mass °C	Tenuta	Valvola PARKER LUCIFER® Valvola	Valvola PARKER LUCIFER® Housing	Valvola PARKER LUCIFER® Bobina	Zona ATEX	Modo di Protezione	Potenza AC W	Potenza DC W	Gruppo Elettrico	Disegno nr.
1/4"	2.5	220	0	-	7	-10	100	FKM	**135K03**	**4269**	**485400**	-	-	-	13	4.0	3510

In questa pagina	Raccordi	Orifizio (mm)	Qn (l/min)	Press. Diff. (bar)	Temp. Fluido (°C)	Temp. Amb. (°C)
da	1/4''	2.5	220	7	-25	-25
a	1/4''	6	680	10	100	50

Disegno 8280

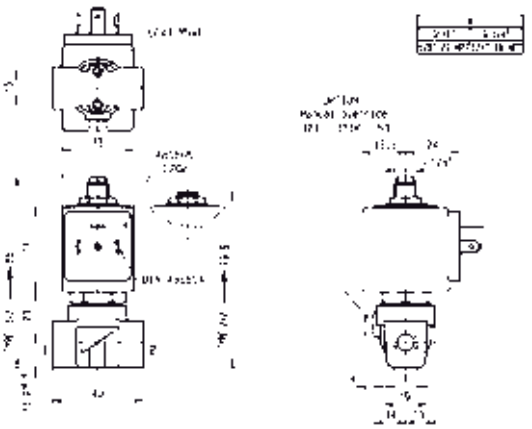

Disegno 3510

3/2 VALVOLE PNEUMATICHE 3/2 E 5/2 PER IL CONTROLLO ATTUATORI (MONTAGGIO SU RACCORDI)

COMANDO DIRETTO

OTTONE
MONTAGGIO SOTTOBASE
NORMALMENTE CHIUSA

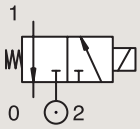

Raccordi	Orifizio Ø 1 mm	Fattore Portata Qn l/min	Pressione differenziale Min bar	Pressione differenziale Mass AC bar	Pressione differenziale Mass DC bar	Temp. Fluido Min °C	Temp. Fluido Mass °C	Tenuta	Valvola PARKER LUCIFER® Valvola	Valvola PARKER LUCIFER® Housing	Valvola PARKER LUCIFER® Bobina	Zona ATEX	Modo di Protezione	Potenza AC W	Potenza DC W	Gruppo Elettrico	Disegno nr.
SB	2.5	180	0	-	2	-20	75	PUR	**131F4397**	**2995**	**482740**	-	-	-	1.6	6.0/8.0	8022
	2.5	180	0	2	2	-20	75	PUR	**131F4397**	**-**	**495900**	1-21	Ex db mb IIC T4 to T6	2.5	2	6.0/8.0	8022
	2.5	180	0	-	2	-20	75	PUR	**131F4397**	**-**	**495910**	0-20	Ex ia IIC T4 to T6	-	0.3 to 3	6.0/8.0	8022
	2.5	180	0	-	2	-20	75	PUR	**131F4397**	**2995**	**496125**	2-22	Ex nAC nCc IIC T5/T6	-	1.6	6.0/8.0	8022

OTTONE
MONTAGGIO SOTTOBASE
UNIVERSALE

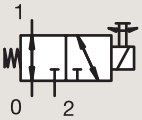

Raccordi	Orifizio Ø 1 mm	Fattore Portata Qn l/min	Pressione differenziale Min bar	Pressione differenziale Mass AC bar	Pressione differenziale Mass DC bar	Temp. Fluido Min °C	Temp. Fluido Mass °C	Tenuta	Valvola PARKER LUCIFER® Valvola	Valvola PARKER LUCIFER® Housing	Valvola PARKER LUCIFER® Bobina	Zona ATEX	Modo di Protezione	Potenza AC W	Potenza DC W	Gruppo Elettrico	Disegno nr.
SB	2	140	0	7	7	-10	100	FKM	**133F4650** [1]	**2995**	**481865**	-	-	8	9	2.1	3509
	2	140	0	7	7	-10	120	FKM	**133F4650** [1]	**4270**	**481000**	-	-	8	8	2.1	3509

Nota:

1. Con comando manuale

In questa pagina	Raccordi	Orifizio (mm)	Qn (l/min)	Press. Diff. (bar)	Temp. Fluido (°C)	Temp. Amb. (°C)
da	1/8''	2	140	2	-20	-20
a	5 mm	2.5	180	7	120	50

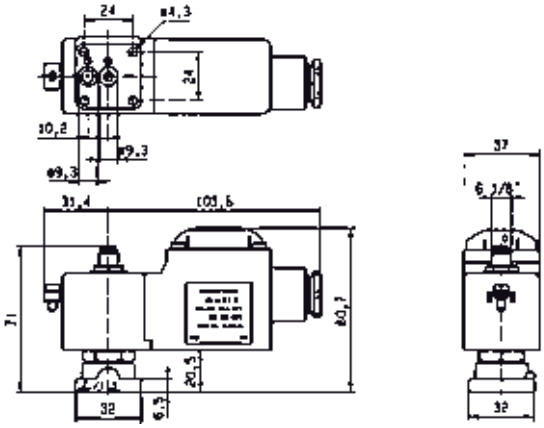

Disegno 8022

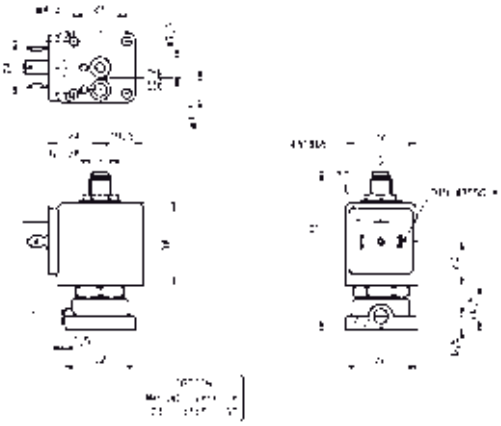

Disegno 3509

3/2

VALVOLE PNEUMATICHE 3/2 E 5/2 PER IL CONTROLLO ATTUATORI (MONTAGGIO SU RACCORDI)

COMANDO DIRETTO

ALLUMINIO ANODIZZATO
MONTAGGIO SU RACCORDI

UNIVERSALE

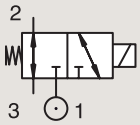

Raccordi	Orifizio Ø 1	Fattore Portata	Pressione differenziale			Temp. Fluido		Tenuta	Valvola PARKER LUCIFER®			Zona ATEX	Modo di Protezione	Potenza		Gruppo Elettrico	Disegno nr.
			Min	Mass		Min	Mass		Valvola	Housing	Bobina						
BSP	mm	Qn l/min	bar	AC bar	DC bar	°C	°C							AC W	DC W		
1/4"	6	680	0	10	10	-25	75	NBR	**133X01**	**-**	**492310**	1-21	Ex eb mb II T3 to T6	6	6	9.0/10.1/10.2	6960
	6	680	0	-	10	-25	65	NBR	**133X01**	**-**	**492965,01**	0-20	Ex ia IIC T6	-	0.3 to 3	9.0/10.1/10.2	6960
	6	680	0	10	10	-25	65	NBR	**133X01**	**-**	**496700**	1-21	Ex db mb IIC T4 to T6	6	6	9.0/10.1/10.2	6960
	6	680	0	10	10	-25	65	NBR	**133X01**	**-**	**496895**	-	-	8	8	9.0/10.1/10.2	6960
	6	680	0	10	10	-25	80	FKM	**133X01001D**	**-**	**483270**	1-21	Ex db IIC T4 to T6	8	8	11.0	7031
1/4" NPT	6	680	0	10	10	-25	65	NBR	**U133X01**	**-**	**496700**	1-21	Ex db mb IIC T4 to T6	6	6	9.0/10.1/10.2	7422

In questa pagina	Raccordi	Orifizio (mm)	Qn (l/min)	Press. Diff. (bar)	Temp. Fluido (°C)	Temp. Amb. (°C)
da	1/4''	6	680	10	-25	-25
a	1/4''	6	680	10	80	50

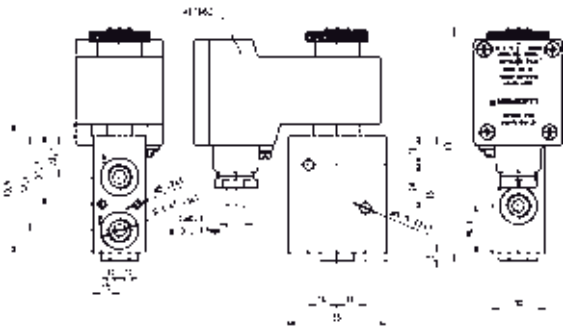

Disegno 6960

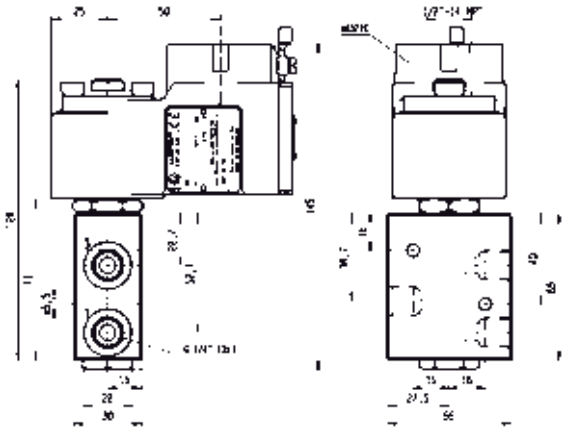

Disegno 7031

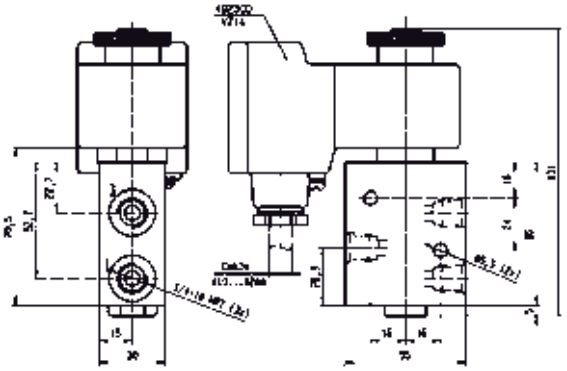

Disegno 7422

5/2 VALVOLE PNEUMATICHE 3/2 E 5/2 PER IL CONTROLLO ATTUATORI (MONTAGGIO SU RACCORDI)

SERVOPILOTATA

ALLUMINIO ANODIZZATO
MONTAGGIO SU RACCORDI
NORMALMENTE CHIUSA

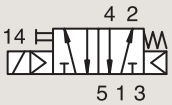

Raccordi	Orifizio Ø	Fattore Portata	Pressione differenziale			Temp. Fluido		Tenuta	Valvola PARKER LUCIFER®			Zona ATEX	Modo di Protezione	Potenza		Gruppo Elettrico	Disegno nr.
	1		Min	Mass		Min	Mass		Valvola	Housing	Bobina						
BSP	mm	Qn l/min	bar	AC bar	DC bar	°C	°C							AC W	DC W		
1/8"	4	600	2	10	10	-25	50	NBR	**341P01** [1]	**-**	**482606**	1-21	Ex mb IIC T4/T5	2	2.5	1.1	7302
	4	600	2	10	10	-25	80	NBR	**341P01** [1]	**8993**	**488980**	-	-	2	2.5	1.1	7302
	4	600	2	10	10	-25	80	NBR	**341P21** [12]	**2995**	**481865**	-	-	8	9	2.1	7296
	4	600	2	10	10	-25	80	NBR	**341P21** [12]	**4270**	**481000**	-	-	8	8	2.1	7296
	4	600	2	10	10	-40	65	PUR	**341P2108** [1]	**2995**	**481865**	-	-	8	9	2.1	7296
	4	600	2	10	10	-40	65	PUR	**341P2108** [1]	**4270**	**481000**	-	-	8	8	2.1	7296
	4	600	2	-	10	-20	65	NBR/ PUR	**341P2197** [1]	**2995**	**482740**	-	-	-	1.6	6.0/8.0	8027
	4	600	2	10	10	-20	65	NBR/ PUR	**341P2197** [1]	**-**	**495900**	1-21	Ex db mb IIC T4 to T6	2.5	2	6.0/8.0	8027
	4	600	2	-	10	-20	65	NBR/ PUR	**341P2197** [1]	**-**	**495910**	0-20	Ex ia IIC T4 to T6	-	0.3 to 3	6.0/8.0	8027
	4	600	2	-	10	-20	65	NBR/ PUR	**341P2197** [1]	**2995**	**496125**	2-22	Ex nAC nCc IIC T5/T6	-	1.6	6.0/8.0	8027

Nota:

1. Con comando manuale
2. Pilota con tenuta in FKM

In questa pagina	Raccordi	Orifizio (mm)	Qn (l/min)	Press. Diff. (bar)	Temp. Fluido (°C)	Temp. Amb. (°C)
da	1/8''	4	600	10	-40	-40
a	1/8''	4	600	10	80	50

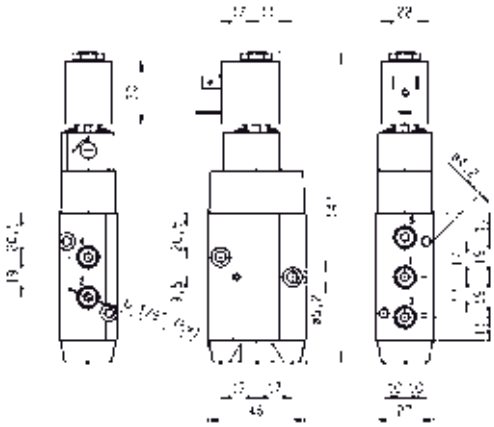

Disegno 7302

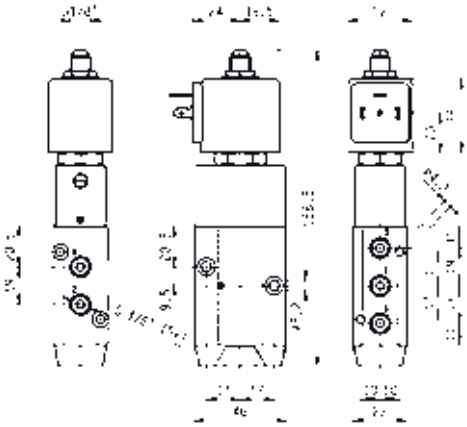

Disegno 7296

Disegno 8027

5/2

VALVOLE PNEUMATICHE 3/2 E 5/2 PER IL CONTROLLO ATTUATORI (MONTAGGIO SU RACCORDI)

SERVOPILOTATA

ALLUMINIO ANODIZZATO
MONTAGGIO SU RACCORDI
NORMALMENTE CHIUSA

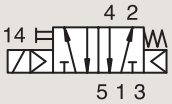

Raccordi BSP	Orifizio Ø 1 mm	Fattore Portata Qn l/min	Pressione differenziale Min bar	Pressione differenziale Mass AC bar	Pressione differenziale Mass DC bar	Temp. Fluido Min °C	Temp. Fluido Mass °C	Tenuta	Valvola PARKER LUCIFER® Valvola	Valvola PARKER LUCIFER® Housing	Valvola PARKER LUCIFER® Bobina	Zona ATEX	Modo di Protezione	Potenza AC W	Potenza DC W	Gruppo Elettrico	Disegno nr.
1/8"	15	600	2	-	10	-10	55	NBR	**341P2190** [1]	**2995**	**483580,01**	0-20	Ex ia IIC T6	-	0.5 to 3	7.0/8.0	7351
	15	600	2	-	10	-10	75	NBR	**341P2190** [1]	**-**	**488660,01**	0-20	Ex ia IIC T6	-	0.3 to 3	7.0/8.0	7351
	15	600	2	-	10	-10	75	NBR	**341P2190** [1]	**-**	**495910**	0-20	Ex ia IIC T4 to T6	-	0.3 to 3	7.0/8.0	7351
1/4"	7	1250	2.5	10	10	-10	50	NBR	**341P03** [1]	**-**	**496131**	-	-	3	3	1.2	8218
	7	1250	2.5	10	10	-10	50	NBR	**341P03** [1]	**-**	**496482**	-	-	3	3	1.2	8218
	7	1250	2.5	10	10	-10	50	NBR	**341P03** [1]	**-**	**496637**	22	Ex tc IIIC T3/T4	3	3	1.2	8218
	7	1250	2.5	10	10	-10	50	NBR	**341P33** [12]	**2995**	**481865**	-	-	8	9	2.1	8219
	7	1250	2.5	10	10	-10	50	NBR	**341P33** [12]	**2995**	**495870**	2-22	Ex nAC nCc IIC T3/T4	8	9	2.1	8219
	7	1250	2.5	10	10	-10	50	NBR	**341P33** [12]	**-**	**495905**	1-21	Ex db mb IIC T4	8	8	2.1	8219
	8	1400	2	10	10	-25	80	NBR	**341P02** [1]	**-**	**482606**	1-21	Ex mb IIC T4/T5	2	2.5	1.1	7314
	8	1400	2	10	10	-25	80	NBR	**341P02** [1]	**8993**	**488980**	-	-	2	2.5	1.1	7314

Nota:

1. Con comando manuale
2. Pilota con tenuta in FKM

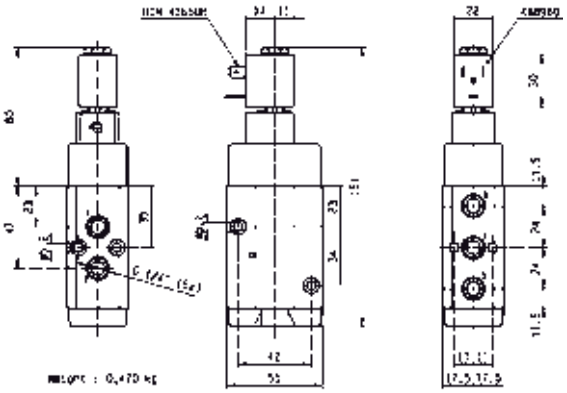

Disegno 7314

In questa pagina	Raccordi	Orifizio (mm)	Qn (l/min)	Press. Diff. (bar)	Temp. Fluido (°C)	Temp. Amb. (°C)
da	1/8"	7	600	10	-25	-25
a	1/4"	15	1400	10	80	50

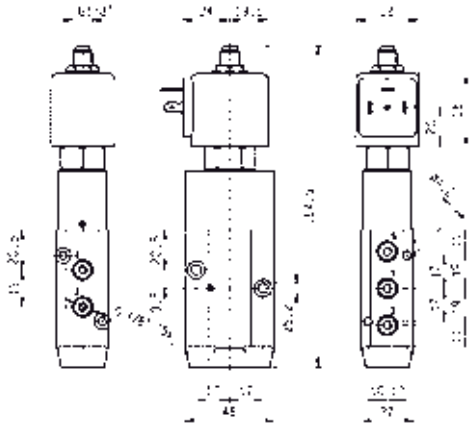

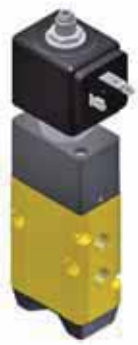

Disegno 7351

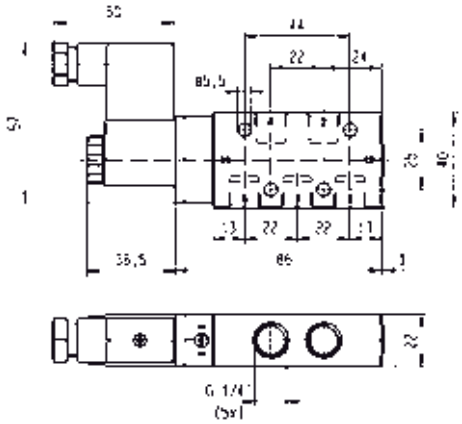

Disegno 8218

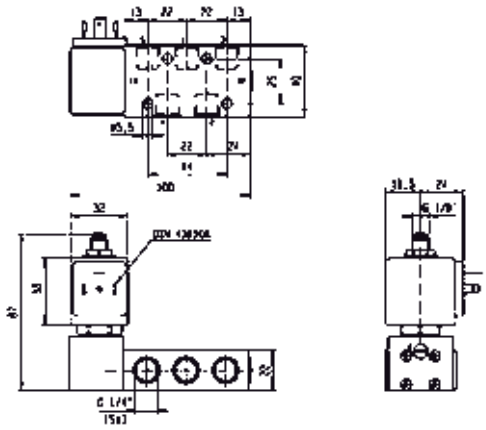

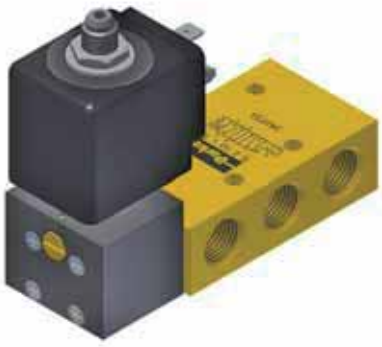

Disegno 8219

5/2 VALVOLE PNEUMATICHE 3/2 E 5/2 PER IL CONTROLLO ATTUATORI (MONTAGGIO SU RACCORDI)

SERVOPILOTATA

ALLUMINIO ANODIZZATO
MONTAGGIO SU RACCORDI

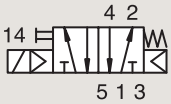

NORMALMENTE CHIUSA

Raccordi	Orifizio Ø	Fattore Portata	Pressione differenziale			Temp. Fluido		Tenuta	Valvola PARKER LUCIFER®			Zona ATEX	Modo di Protezione	Potenza		Gruppo Elettrico	Disegno nr.
	1		Min	Mass		Min	Mass		Valvola	Housing	Bobina						
BSP	mm	Qn l/min	bar	AC bar	DC bar	°C	°C							AC W	DC W		
1/4"	8	1400	2	10	10	-25	80	NBR	**341P22 12**	**2995**	**481865**	-	-	8	9	2.1	7319
	8	1400	2	10	10	-25	80	NBR	**341P22 12**	**4270**	**481000**	-	-	8	8	2.1	7319
	8	1400	2	-	10	-25	55	NBR	**341P2290**	**2995**	**483580,01**	0-20	Ex ia IIC T6	-	0.5 to 3	7.0/8.0	7352
	8	1400	2	-	10	-25	75	NBR	**341P2290**	**-**	**488660,01**	0-20	Ex ia IIC T6	-	0.3 to 3	7.0/8.0	7352
	8	1400	2	-	10	-25	75	NBR	**341P2290**	**-**	**495910**	0-20	Ex ia IIC T4 to T6	-	0.3 to 3	7.0/8.0	7352
	8	1400	2	-	10	-20	80	NBR	**341P2297 13**	**2995**	**482740**	-	-	-	1.6	6.0/8.0	8030
	8	1400	2	10	10	-20	80	NBR	**341P2297 13**	**-**	**495900**	1-21	Ex db mb IIC T4 to T6	2.5	2	6.0/8.0	8030
	8	1400	2	-	10	-20	80	NBR	**341P2297 13**	**-**	**495910**	0-20	Ex ia IIC T4 to T6	-	0.3 to 3	6.0/8.0	8030
	8	1400	2	-	10	-20	80	NBR	**341P2297 13**	**2995**	**496125**	2-22	Ex nAC nCc IIC T5/T6	-	1.6	6.0/8.0	8030

Nota:

1. Con comando manuale
2. Pilota con tenuta in FKM
3. Pilota con tenuta in PUR

In questa pagina	Raccordi	Orifizio (mm)	Qn (l/min)	Press. Diff. (bar)	Temp. Fluido (°C)	Temp. Amb. (°C)
da	1/4"	8	1400	10	-25	-25
a	1/4"	8	1400	10	80	50

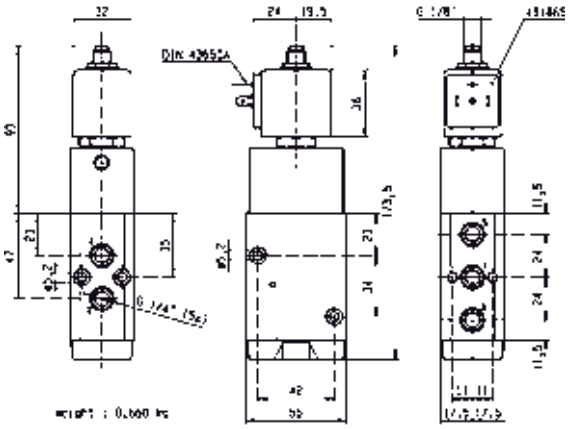

Disegno 7319

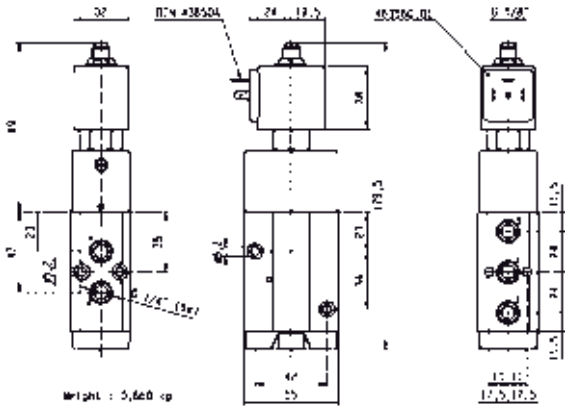

Disegno 7352

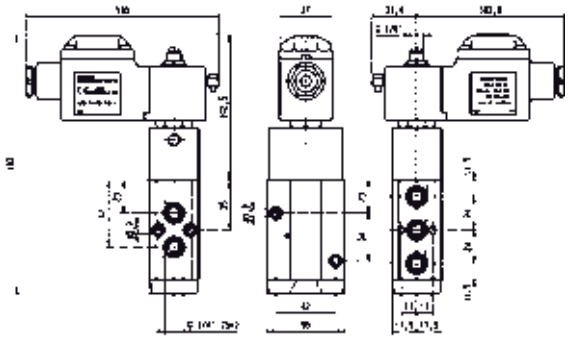

Disegno 8030

5/2 VALVOLE PNEUMATICHE 3/2 E 5/2 PER IL CONTROLLO ATTUATORI (MONTAGGIO SU RACCORDI)

SERVOPILOTATA

ALLUMINIO ANODIZZATO
MONTAGGIO SU RACCORDI
NORMALMENTE CHIUSA

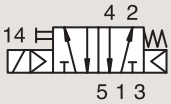

Raccordi	Orifizio Ø	Fattore Portata	Pressione differenziale			Temp. Fluido		Tenuta	Valvola PARKER LUCIFER®			Zona ATEX	Modo di Protezione	Potenza		Gruppo Elettrico	Disegno nr.
	1		Min	Mass		Min	Mass		Valvola	Housing	Bobina						
BSP	mm	Qn l/min	bar	AC bar	DC bar	°C	°C							AC W	DC W		
1/2"	12	3000	2.5	10	10	-10	50	NBR	**341P04** [1]	**-**	**496131**	-	-	3	3	1.2	8220
	12	3000	2.5	10	10	-10	50	NBR	**341P04** [1]	**-**	**496482**	-	-	3	3	1.2	8220
	12	3000	2.5	10	10	-10	50	NBR	**341P04** [1]	**-**	**496637**	22	Ex tc IIIC T95°C	3	3	1.2	8220
	12	3000	2.5	10	10	-10	50	NBR	**341P34** [1]	**2995**	**481865**	-	-	8	9	2.1	8221
	12	3000	2.5	10	10	-10	50	NBR	**341P34** [1]	**2995**	**495870**	2-22	Ex nAC nCc IIC T3/T4	8	9	2.1	8221
	12	3000	2.5	10	10	-10	50	NBR	**341P34** [1]	**-**	**495905**	1-21	Ex db mb IIC T4	8	8	2.1	8221

Nota:

1. Con comando manuale

In questa pagina	Raccordi	Orifizio (mm)	Qn (l/min)	Press. Diff. (bar)	Temp. Fluido (°C)	Temp. Amb. (°C)
da	1/2''	12	3000	10	-10	-10
a	1/2''	12	3000	10	50	50

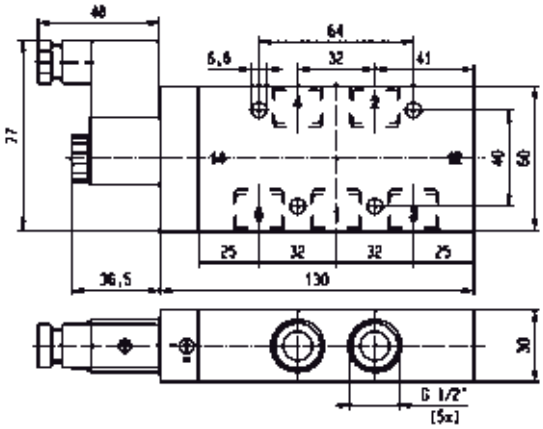

Disegno 8220

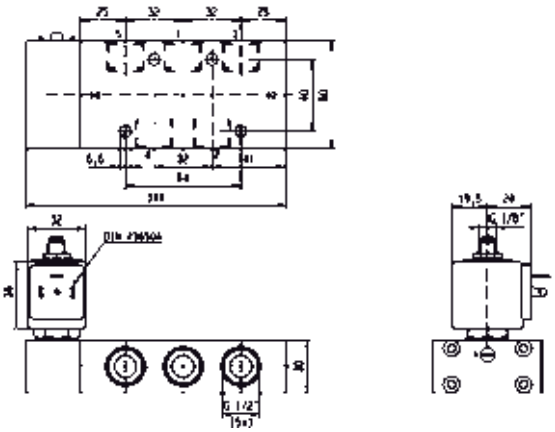

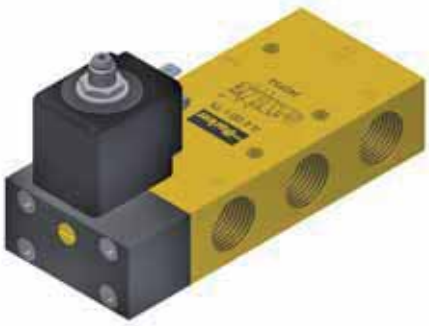

Disegno 8221

5/2 VALVOLE PNEUMATICHE 3/2 E 5/2 PER IL CONTROLLO ATTUATORI (MONTAGGIO SU RACCORDI)

SERVOPILOTATA

ALLUMINIO ANODIZZATO MONTAGGIO SU RACCORDI

DOPPIO SOLENOIDE

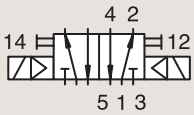

Raccordi BSP	Orifizio Ø 1 mm	Fattore Portata Qn l/min	Pressione differenziale Min bar	Pressione differenziale Mass AC bar	Pressione differenziale Mass DC bar	Temp. Fluido Min °C	Temp. Fluido Mass °C	Tenuta	Valvola PARKER LUCIFER® Valvola	Valvola PARKER LUCIFER® Housing	Valvola PARKER LUCIFER® Bobina	Zona ATEX	Modo di Protezione	Potenza AC W	Potenza DC W	Gruppo Elettrico	Disegno nr.
1/8"	4	400	2	10	10	-25	80	NBR	**347P01 [1]**	**-**	**482606**	1-21	Ex mb IIC T4/T5	2	2.5	1.1	7306
	4	400	2	10	10	-25	80	NBR	**347P01 [1]**	**8993**	**488980**	-	-	2	2.5	1.1	7306
	4	400	2	10	10	-25	80	NBR	**347P21 [12]**	**2995**	**481865**	-	-	8	9	2.1	7298
	4	400	2	10	10	-25	80	NBR	**347P21 [12]**	**4270**	**481000**	-	-	8	8	2.1	7298
	4	400	2	-	10	-25	55	NBR	**347P2190**	**2995**	**483580,01**	0-20	Ex ia IIC T6	-	0.5 to 3	7.0/8.0	7353
	4	400	2	-	10	-25	75	NBR	**347P2190**	**-**	**488660,01**	0-20	Ex ia IIC T6	-	0.3 to 3	7.0/8.0	7353
	4	400	2	-	10	-25	75	NBR	**347P2190**	**-**	**495910**	0-20	Ex ia IIC T4 to T6	-	0.3 to 3	7.0/8.0	7353
	4	400	2	-	10	-20	65	NBR/ PUR	**347P2197 [1]**	**2995**	**482740**	-	-	-	1.6	6.0/8.0	8028
	4	400	2	10	10	-20	65	NBR/ PUR	**347P2197 [1]**	**-**	**495900**	1-21	Ex db mb IIC T4 to T6	2.5	2	6.0/8.0	8028
	4	400	2	-	10	-20	65	NBR/ PUR	**347P2197 [1]**	**-**	**495910**	0-20	Ex ia IIC T4 to T6	-	0.3 to 3	6.0/8.0	8028
	4	400	2	-	10	-20	65	NBR/ PUR	**347P2197 [1]**	**2995**	**496125**	2-22	Ex nAC nCc IIC T5/T6	-	1.6	6.0/8.0	8028

Nota:

1. Con comando manuale
2. Pilota con tenuta in FKM

Disegno 8028

In questa pagina	Raccordi	Orifizio (mm)	Qn (l/min)	Press. Diff. (bar)	Temp. Fluido (°C)	Temp. Amb. (°C)
da	1/8''	4	400	10	-25	-25
a	1/8''	4	400	10	80	50

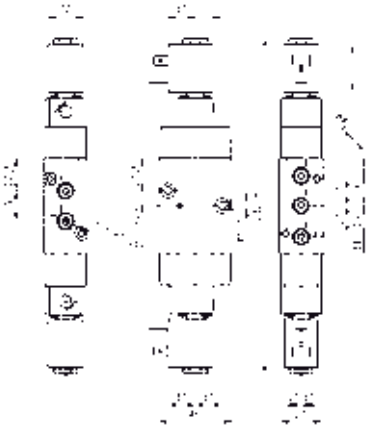

Disegno 7306

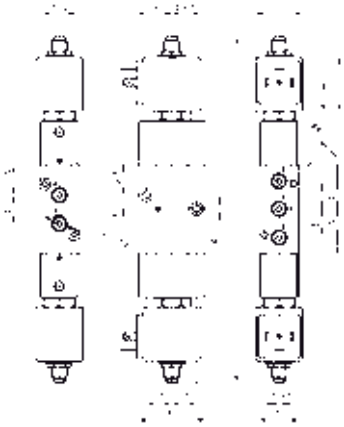

Disegno 7298

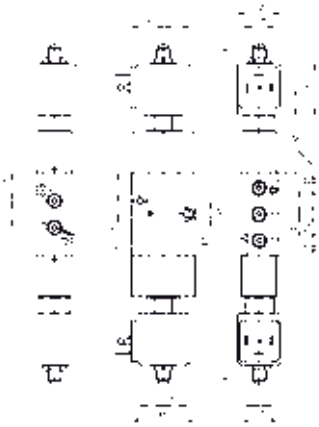

Disegno 7353

5/2 VALVOLE PNEUMATICHE 3/2 E 5/2 PER IL CONTROLLO ATTUATORI (MONTAGGIO SU RACCORDI)

SERVOPILOTATA

ALLUMINIO ANODIZZATO MONTAGGIO SU RACCORDI

DOPPIO SOLENOIDE

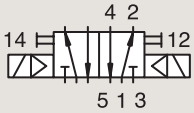

Raccordi	Orifizio Ø	Fattore Portata	Pressione differenziale			Temp. Fluido		Tenuta	Valvola PARKER LUCIFER®			Zona ATEX	Modo di Protezione	Potenza		Gruppo Elettrico	Disegno nr.
	1		Min	Mass		Min	Mass		Valvola	Housing	Bobina						
BSP	mm	Qn l/min	bar	AC bar	DC bar	°C	°C							AC W	DC W		
1/4"	7	1250	2.5	10	10	-10	50	NBR	347P03 [1]	-	496131	-	-	3	3	1.2	8222
	7	1250	2.5	10	10	-10	50	NBR	347P03 [1]	-	496482	-	-	3	3	1.2	8222
	7	1250	2.5	10	10	-10	50	NBR	347P03 [1]	-	496637	22	Ex tc IIIC T95°C	3	3	1.2	8222
	7	1250	2.5	10	10	-10	50	NBR	347P33 [1]	2995	481865	-	-	8	9	2.1	8223
	7	1250	2.5	10	10	-10	50	NBR	347P33 [12]	2995	495870	2-22	Ex nAC nCc IIC T3/T4	8	9	2.1	8223
	7	1250	2.5	10	10	-10	50	NBR	347P33 [12]	-	495905	1-21	Ex db mb IIC T4	8	8	2.1	8223
	8	1400	2	10	10	-25	80	NBR	347P02 [1]	-	482606	1-21	Ex mb IIC T4/T5	2	2.5	1.1	7316
	8	1400	2	10	10	-25	80	NBR	347P02 [1]	8993	488980	-	-	2	2.5	1.1	7316
	8	1400	2	10	10	-25	80	NBR	347P22 [12]	2995	481865	-	-	8	9	2.1	7321
	8	1400	2	10	10	-25	80	NBR	347P22 [12]	4270	481000	-	-	8	8	2.1	7321

Nota:

1. Con comando manuale
2. Pilota con tenuta in FKM

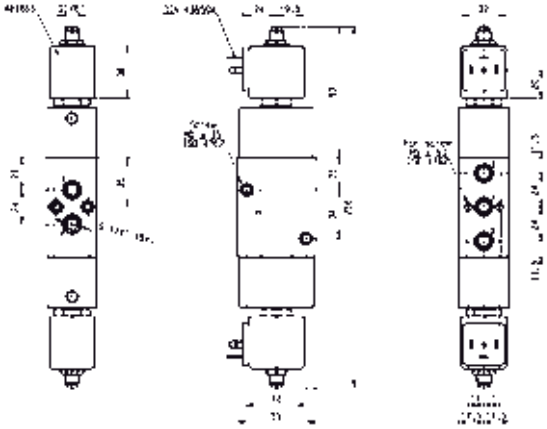

Disegno 7321

In questa pagina	Raccordi	Orifizio (mm)	Qn (l/min)	Press. Diff. (bar)	Temp. Fluido (°C)	Temp. Amb. (°C)
da	1/4"	7	1250	10	-25	-25
a	1/4"	8	1400	10	80	50

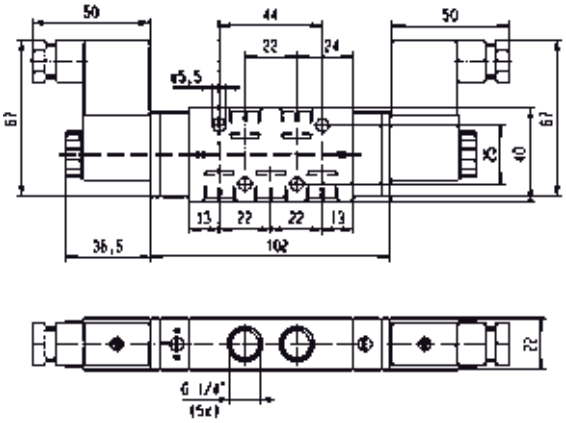

Disegno 8222

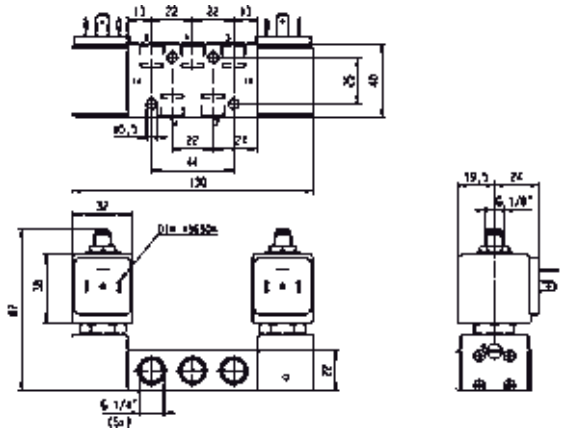

Disegno 8223

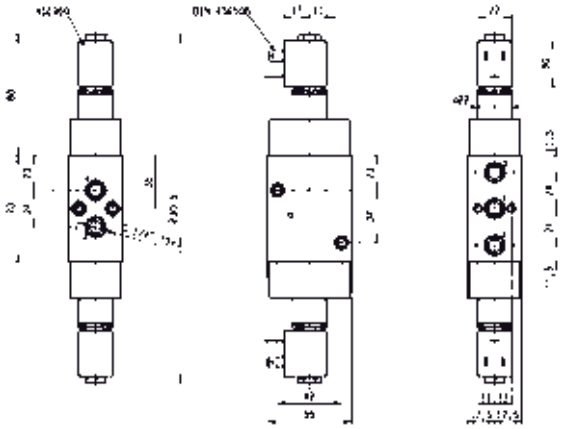

Disegno 7316

5/2 VALVOLE PNEUMATICHE 3/2 E 5/2 PER IL CONTROLLO ATTUATORI (MONTAGGIO SU RACCORDI)

SERVOPILOTATA

ALLUMINIO ANODIZZATO MONTAGGIO SU RACCORDI

DOPPIO SOLENOIDE

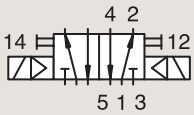

Raccordi BSP	Orifizio Ø 1 mm	Fattore Portata Qn l/min	Pressione differenziale Min bar	Pressione differenziale Mass AC bar	Pressione differenziale Mass DC bar	Temp. Fluido Min °C	Temp. Fluido Mass °C	Tenuta	Valvola PARKER LUCIFER® Valvola	Valvola PARKER LUCIFER® Housing	Valvola PARKER LUCIFER® Bobina	Zona ATEX	Modo di Protezione	Potenza AC W	Potenza DC W	Gruppo Elettrico	Disegno nr.
1/2"	12	3000	2.5	10	10	-10	50	NBR	**347P04** [1]	**-**	**496131**	-	-	3	3	1.2	8224
	12	3000	2.5	10	10	-10	50	NBR	**347P04** [1]	**-**	**496482**	-	-	3	3	1.2	8224
	12	3000	2.5	10	10	-10	50	NBR	**347P04** [1]	**-**	**496637**	22	Ex tc IIIC T95°C	3	3	1.2	8224
	12	3000	2.5	10	10	-10	50	NBR	**347P34** [12]	**2995**	**481865**	-	-	8	9	2.1	8225
	12	3000	2.5	10	10	-10	50	NBR	**347P34** [12]	**2995**	**495870**	2-22	Ex nAC nCc IIC T3/T4	8	9	2.1	8225
	12	3000	2.5	10	10	-10	50	NBR	**347P34** [12]	**-**	**495905**	1-21	Ex db mb IIC T4	8	8	2.1	8225

Nota:

1. Con comando manuale
2. Pilota con tenuta in FKM

ALLUMINIO ANODIZZATO MONTAGGIO SU RACCORDI

CONTROLLO CON IMPULSI ELETTRICI

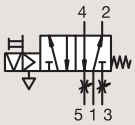

Raccordi BSP	Orifizio Ø 1 mm	Fattore Portata Qn l/min	Pressione differenziale Min bar	Pressione differenziale Mass AC bar	Pressione differenziale Mass DC bar	Temp. Fluido Min °C	Temp. Fluido Mass °C	Tenuta	Valvola PARKER LUCIFER® Valvola	Valvola PARKER LUCIFER® Housing	Valvola PARKER LUCIFER® Bobina	Zona ATEX	Modo di Protezione	Potenza AC W	Potenza DC W	Gruppo Elettrico	Disegno nr.
1/8"	4	600	2	-	10	-25	80	NBR	**345P21**	**4269**	**485400**	-	-	-	13	4.0	8123

In questa pagina	Raccordi	Orifizio (mm)	Qn (l/min)	Press. Diff. (bar)	Temp. Fluido (°C)	Temp. Amb. (°C)
da	1/8"	4	600	10	-25	-25
a	1/2"	12	3000	10	80	50

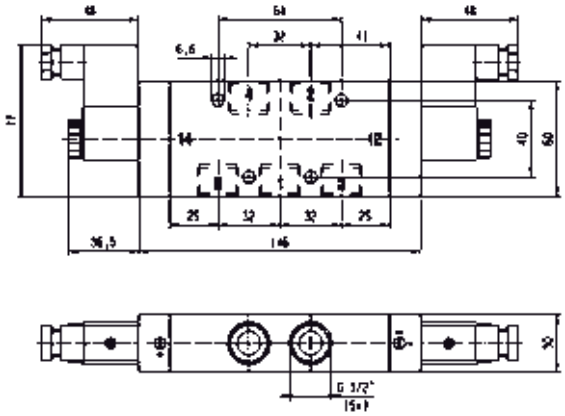

Disegno 8224

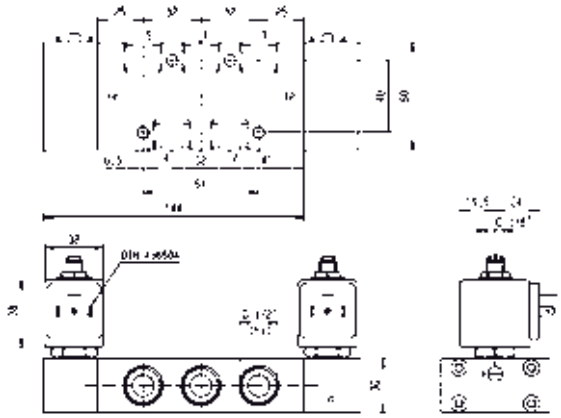

Disegno 8225

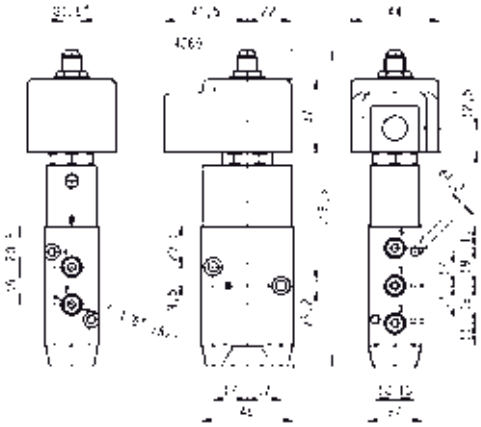

Disegno 8123

3/2

VALVOLE PNEUMATICHE 3/2 E 5/2 PER IL CONTROLLO ATTUATORI (MONTAGGIO SU RACCORDI)

RIARMO MANUALE

OTTONE

MONTAGGIO SU RACCORDI

UNIVERSALE

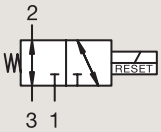

Raccordi	Orifizio Ø	Fattore Portata	Pressione differenziale			Temp. Fluido		Tenuta	Valvola PARKER LUCIFER®			Zona ATEX	Modo di Protezione	Potenza		Gruppo Elettrico	Disegno nr.
	1		Min	Mass		Min	Mass		Valvola	Housing	Bobina						
	mm	Qn l/min	bar	AC bar	DC bar	°C	°C							AC W	DC W		
1/4" NPT	6	680	0	10	10	-25	65	NBR	**U033X0111**	-	**492310**	1-21	Ex eb mb II T3 to T6	6	6	10.1/10.2/12.0	7641
	6	680	0	10	10	-25	65	NBR	**U033X0111**	-	**496700**	1-21	Ex db mb IIC T4 to T6	6	6	10.1/10.2/12.0	7641

In questa pagina	Raccordi	Orifizio (mm)	Qn (l/min)	Press. Diff. (bar)	Temp. Fluido (°C)	Temp. Amb. (°C)
da	1/4''	6	680	10	-25	-25
a	1/4''	6	680	10	65	65

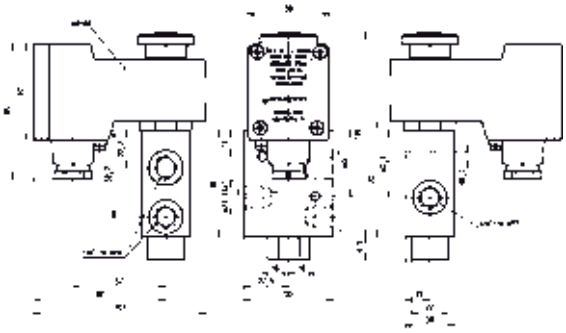

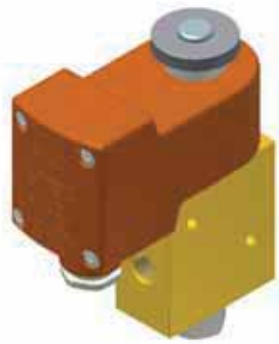

Disegno 7641

VALVOLE PNEUMATICHE 3/2 E 5/2 PER CONTROLLO ATTUATORI (NAMUR)

3/2
5/2
5/3

Azionamento	Corpo	Funzione	Raccordi	Orifizio (mm)	Fattore Portata	Pressione Differenziale Mass. (Bar)	Temp. Mass. Fluido	Pagina Elettrovalvola Parker	Pagina Elettrovalvola Parker LUCIFER®
Comando diretto	Alluminio anodizzato/ NAMUR	Normalmente chiusa	1/4''	6	680	10	75	-	334
Servopilotata	Alluminio anodizzato/ NAMUR/Spool	Attuazione a solenoide - ritorno a molla	1/8''- 1/4''	4 a 8	1400	10	80	-	340
			1/4''	7 a 8	1400	10	80	-	336
			1/2''	12	3000	10	50	-	336
		Doppio solenoide	1/8''- 1/4''	4	400	10	80	-	352
			1/4''	7 a 8	1400	10	120	-	354
			1/2''	12	3000	10	120	-	356
			1/8''- 1/4''	4	400	10	80	-	358
			1/4''	4 a 7	1250	10	120	-	358
			1/4''	7	1250	10	50	-	358
		Controllo con impulsi elettrici	1/8''- 1/4''	4	600	10	80	-	362
	Alluminio anodizzato/ NAMUR/Poppet	Attuazione a solenoide - ritorno a molla	1/8''- 1/4''	4	355	10	75	-	362
Pilotaggio esterno	Alluminio anodizzato/ NAMUR		1/4''	7	1250	10	50	-	366
			1/8''- 1/4''	4	600	10	80	-	368
			1/4''	7	1250	10	50	-	366
			1/2''	12	3000	10	50	-	366
		Attuazione e ritorno ad aria	1/4''	7	1250	10	50	-	370

3/2 VALVOLE PNEUMATICHE 3/2 E 5/2 PER CONTROLLO ATTUATORI (NAMUR)

COMANDO DIRETTO

ALLUMINIO ANODIZZATO NAMUR

NORMALMENTE CHIUSA

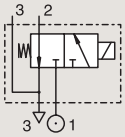

Raccordi	Orifizio Ø	Fattore Portata	Pressione differenziale			Temp. Fluido		Tenuta	Valvola PARKER LUCIFER®			Zona ATEX	Modo di Protezione	Potenza		Gruppo Elettrico	Disegno nr.
	1		Min	Mass		Min	Mass		Valvola	Housing	Bobina						
BSP	mm	Qn l/min	bar	AC bar	DC bar	°C	°C							AC W	DC W		
1/4"	6	680	0	10	10	-25	75	NBR	131X1101	-	492310	1-21	Ex eb mb II T3 to T6	6	6	9.0/10.1	7336
	6	680	0	-	10	-25	75	NBR	131X1101	-	492965,01	0-20	Ex ia IIC T6	-	0.3 to 3	9.0/10.1	7336
	6	680	0	10	10	-25	75	NBR	131X1101	-	496700	1-21	Ex db mb IIC T4 to T6	6	6	9.0/10.1	7336
	6	680	0	10	10	-25	75	NBR	131X1101	-	496895	-	-	8	8	9.0/10.1	7336
	6	680	0	-	10	-25	65	NBR	131X1131 [1]	-	492310	1-21	Ex eb mb II T3 to T6	-	6	10.1/10.2	7336
	6	680	0	-	10	-25	65	NBR	131X1131 [1]	-	496700	1-21	Ex db mb IIC T4 to T6	-	6	10.1/10.2	7336
	6	680	0	-	10	-25	65	NBR	131X1131 [1]	-	496895	-	-	-	8	10.1/10.2	7336
1/4" NPT	6	680	0	-	10	-25	75	NBR	U131X1101	-	492965,01	0-20	Ex ia IIC T6	-	0.3 to 3	10.1/10.2	7336
	6	680	0	10	10	-25	65	NBR	U131X1101	-	496700	1-21	Ex db mb IIC T4 to T6	6	6	10.1/10.2	7336
	6	680	0	10	10	-25	65	NBR	U131X1101	-	496895	-	-	8	8	10.1/10.2	7336

Nota:

1. Utilizzo esclusivo in DC. Minima caduta di tensione 15% del voltaggio nominale (vecchia DIN19251)

In questa pagina	Raccordi	Orifizio (mm)	Qn (l/min)	Press. Diff. (bar)	Temp. Fluido (°C)	Temp. Amb. (°C)
da	1/4''	6	680	10	-25	-25
a	1/4''	6	680	10	75	65

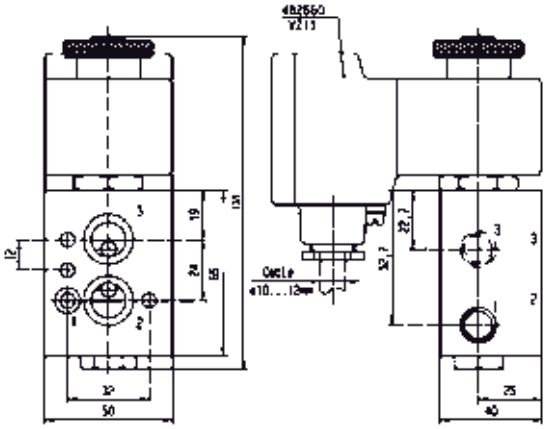

Disegno 7336

3/2 VALVOLE PNEUMATICHE 3/2 E 5/2 PER CONTROLLO ATTUATORI (NAMUR)

SERVOPILOTATA

ALLUMINIO ANODIZZATO NAMUR

ATTUAZIONE A SOLENOIDE - RITORNO A MOLLA

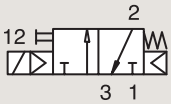

Raccordi BSP	Orifizio Ø 1 mm	Fattore Portata Qn l/min	Pressione differenziale Min bar	Pressione differenziale Mass AC bar	Pressione differenziale Mass DC bar	Temp. Fluido Min °C	Temp. Fluido Mass °C	Tenuta	Valvola PARKER LUCIFER® Valvola	Valvola PARKER LUCIFER® Housing	Valvola PARKER LUCIFER® Bobina	Zona ATEX	Modo di Protezione	Potenza AC W	Potenza DC W	Gruppo Elettrico	Disegno nr.
1/4"	7	1250	2.5	10	10	-10	50	NBR	331N03 [1]	-	496131	-	-	3	3	1.2	8056
	7	1250	2.5	10	10	-10	50	NBR	331N03 [1]	-	496482	-	-	3	3	1.2	8056
	7	1250	2.5	10	10	-10	50	NBR	331N03 [1]	-	496637	22	Ex tc IIIC T95°C	3	3	1.2	8056
1/2"	12	3000	2	10	10	-10	50	NBR	331N04 [1]	-	496131	-	-	3	3	1.2	8060
	12	3000	2	10	10	-10	50	NBR	331N04 [1]	-	496482	-	-	3	3	1.2	8060
	12	3000	2	10	10	-10	50	NBR	331N04 [1]	-	496637	22	Ex tc IIIC T95°C	3	3	1.2	8060
	12	3000	2	10	10	-10	50	NBR	331N0402	-	496131	-	-	3	3	1.2	8251
	12	3000	2	10	10	-10	50	NBR	331N0402	-	496482	-	-	3	3	1.2	8251

Nota:

1. Con comando manuale

In questa pagina	Raccordi	Orifizio (mm)	Qn (l/min)	Press. Diff. (bar)	Temp. Fluido (°C)	Temp. Amb. (°C)
da	1/4"	7	1250	10	-10	-10
a	1/2"	12	3000	10	50	50

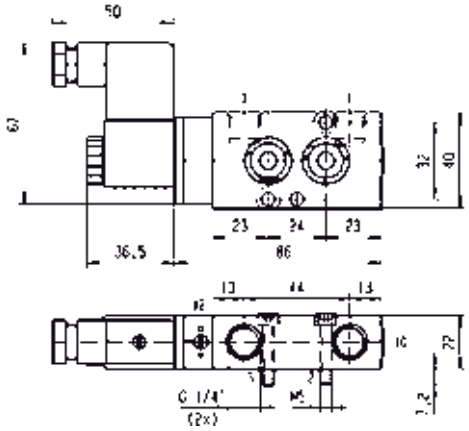

Disegno 8056

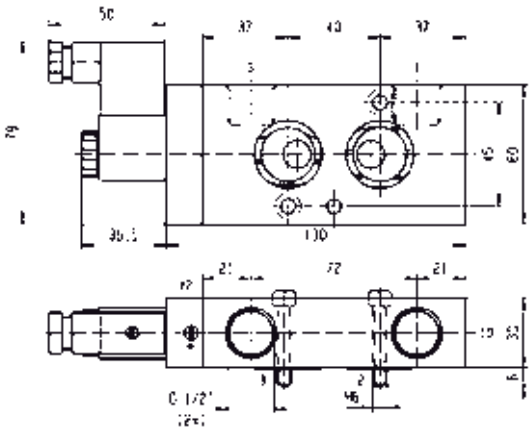

Disegno 8060

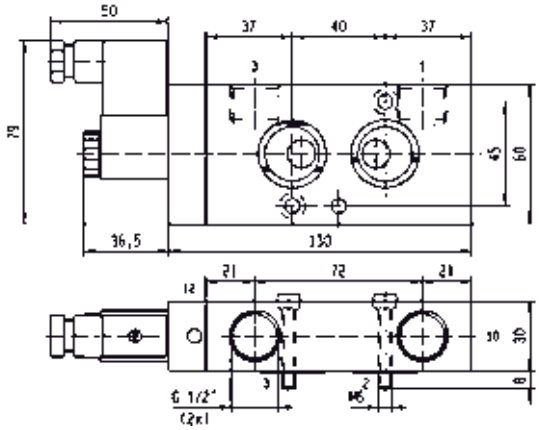

Disegno 8251

3/2 VALVOLE PNEUMATICHE 3/2 E 5/2 PER CONTROLLO ATTUATORI (NAMUR)

SERVOPILOTATA

ALLUMINIO ANODIZZATO

NAMUR

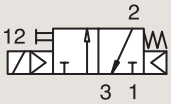

ATTUAZIONE A SOLENOIDE - RITORNO A MOLLA

Raccordi	Orifizio Ø	Fattore Portata	Pressione differenziale			Temp. Fluido		Tenuta	Valvola PARKER LUCIFER®			Zona ATEX	Modo di Protezione	Potenza		Gruppo Elettrico	Disegno nr.
	1		Min	Mass		Min	Mass		Valvola	Housing	Bobina						
BSP	mm	Qn l/min	bar	AC bar	DC bar	°C	°C							AC W	DC W		
1/2"	12	3000	2.5	10	10	-10	50	NBR	**331N34** [12]	**2995**	**481865**	-	-	8	9	2.1	8210
	12	3000	2.5	10	10	-10	50	NBR	**331N34** [12]	**2995**	**495870**	2-22	Ex nAC nCc IIC T3/T4	8	9	2.1	8210
	12	3000	2.5	10	10	-10	50	NBR	**331N34** [12]	**-**	**495905**	1-21	Ex db mb IIC T4	8	8	2.1	8210
	12	3000	2.5	10	10	-10	50	NBR	**331N3402** [1]	**2995**	**481865**	-	-	8	9	2.1	8252

Nota:

1. Con comando manuale
2. Pilota con tenuta in FKM

In questa pagina	Raccordi	Orifizio (mm)	Qn (l/min)	Press. Diff. (bar)	Temp. Fluido (°C)	Temp. Amb. (°C)
da	1/2''	12	3000	10	-10	-10
a	1/2''	12	3000	10	50	50

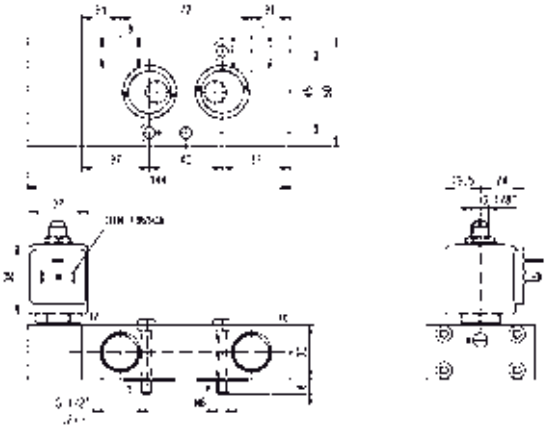

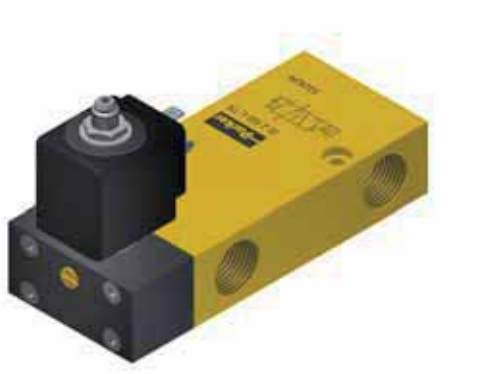

Disegno 8210

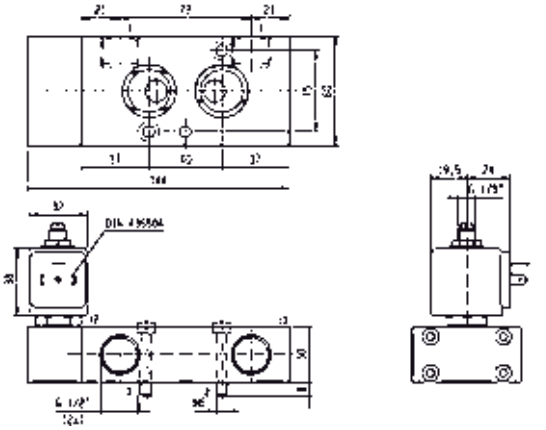

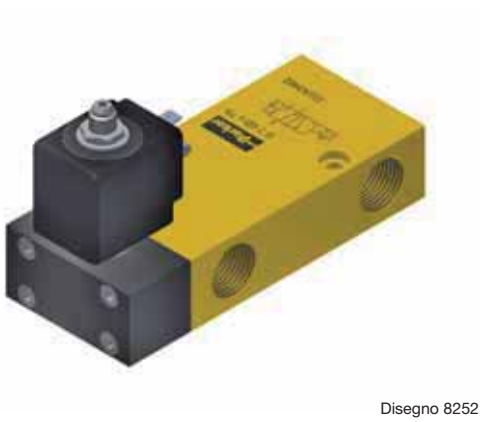

Disegno 8252

3/2-5/2 VALVOLE PNEUMATICHE 3/2 E 5/2 PER CONTROLLO ATTUATORI (NAMUR)

SERVOPILOTATA

ALLUMINIO ANODIZZATO NAMUR

ATTUAZIONE A SOLENOIDE - RITORNO A MOLLA

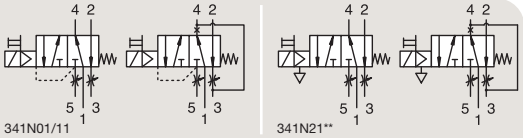

Raccordi BSP	Orifizio Ø 1 mm	Fattore Portata Qn l/min	Pressione differenziale Min bar	Pressione differenziale Mass AC bar	Pressione differenziale Mass DC bar	Temp. Fluido Min °C	Temp. Fluido Mass °C	Tenuta	Valvola PARKER LUCIFER® Valvola	Valvola PARKER LUCIFER® Housing	Valvola PARKER LUCIFER® Bobina	Zona ATEX	Modo di Protezione	Potenza AC W	Potenza DC W	Gruppo Elettrico	Disegno nr.
1/8"-1/4"	4	600	2	10	10	-25	80	NBR	**341N01** $_{12}$	**8993**	**488980**	-	-	2	2.5	1.1	7301
	4	600	2	10	10	-25	80	NBR	**341N11** $_{12}$	**8993**	**488980**	-	-	2	2.5	1.1	7300
	4	600	2	10	10	-25	80	NBR	**341N21** $_{1}$	**2995**	**481865**	-	-	8	9	2.1	7311
	4	600	2	10	10	-25	80	NBR	**341N21** $_{1}$	**4270**	**481000**	-	-	8	8	2.1	7311
	4	600	2	-	10	-25	55	NBR	**341N2190** $_{12}$	**2995**	**483580,01**	0-20	Ex ia IIC T6	-	0.5 to 3	7.0/8.0	7874
	4	600	2	-	10	-25	55	NBR	**341N2190** $_{12}$	**-**	**495910**	0-20	Ex ia IIC T4 to T6	-	0.3 to 3	7.0/8.0	7874

Nota:

1. Con comando manuale
2. Con scarico controllato

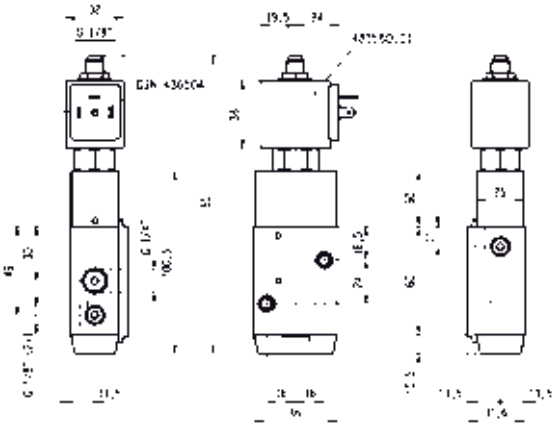

Disegno 7874

In questa pagina	Raccordi	Orifizio (mm)	Qn (l/min)	Press. Diff. (bar)	Temp. Fluido (°C)	Temp. Amb. (°C)
da	1/8"-1/4"	4	600	10	-25	-25
a	1/8"-1/4"	4	600	10	80	50

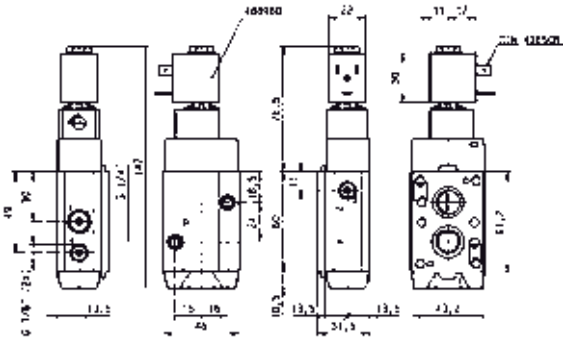

Disegno 7301

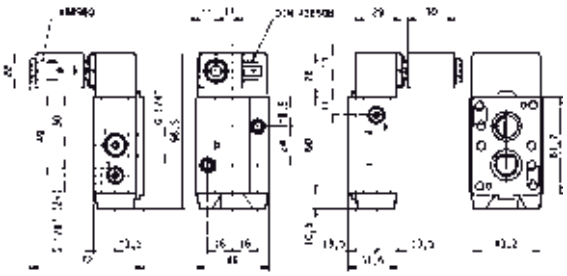

Disegno 7300

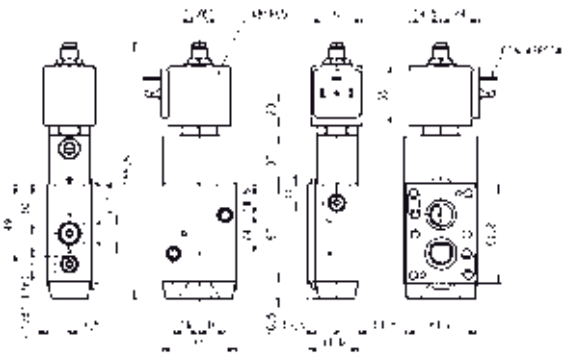

Disegno 7311

3/2-5/2 VALVOLE PNEUMATICHE 3/2 E 5/2 PER CONTROLLO ATTUATORI (NAMUR)

SERVOPILOTATA

ALLUMINIO ANODIZZATO

NAMUR

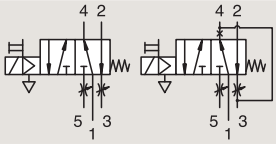

ATTUAZIONE A SOLENOIDE - RITORNO A MOLLA

Raccordi	Orifizio Ø	Fattore Portata	Pressione differenziale			Temp. Fluido		Tenuta	Valvola PARKER LUCIFER®			Zona ATEX	Modo di Protezione	Potenza		Gruppo Elettrico	Disegno nr.
	1		Min	Mass		Min	Mass		Valvola	Housing	Bobina						
BSP	mm	Qn l/min	bar	AC bar	DC bar	°C	°C							AC W	DC W		
1/8"-1/4"	4	600	2	10	10	-25	80	NBR	341N31 13	2995	481865	-	-	8	9	2.1	7295
	4	600	2	10	10	-25	80	NBR	341N31 13	2995	495870	2-22	Ex nAC nCc IIC T3/T4	8	9	2.1	7295
	4	600	2	10	10	-25	65	NBR	341N31 13	-	495905	1-21	Ex db mb IIC T4	8	8	2.1	7295
	4	600	2	10	10	-25	80	NBR	341N3102	2995	481865	-	-	8	9	2.1	7295
	4	600	2	10	10	-40	65	PUR	341N3108 1	2995	481865	-	-	8	9	2.1	7295
	4	600	2	10	10	-40	65	PUR	341N3108 1	4270	481000	-	-	8	8	2.1	7295
	4	600	2	10	10	-40	65	PUR	341N3128	2995	481865	-	-	8	9	2.1	7295
	4	600	2	10	10	-40	65	PUR	341N3128	4270	481865	-	-	8	9	2.1	7295
	4	600	2	-	10	-25	80	FKM/NBR	341N3130 123	2995	481865	-	-	-	9	2.1	7295
	4	600	2	-	10	-25	80	FKM/NBR	341N3130 123	-	492190	1-21	Ex eb mb IIC T3/T4	-	9	2.1	7295
	4	600	2	-	10	-25	80	FKM/NBR	341N3130 123	-	495905	1-21	Ex db mb IIC T4	-	8	2.1	7295
	4	600	2	-	10	-10	55	NBR	341N3190	2995	483580,01	0-20	Ex ia IIC T6	-	0.5 to 3	7.0/8.0	7349
	4	600	2	-	10	-10	75	NBR	341N3190	-	488660,01	0-20	Ex ia IIC T6	-	0.3 to 3	7.0/8.0	7349
	4	600	2	-	10	-10	75	NBR	341N3190	-	495910	0-20	Ex ia IIC T4 to T6	-	0.3 to 3	7.0/8.0	7349
	4	600	2	-	10	-25	65	NBR	341N3196 4	2995	482740	-	-	-	1.6	6.0/8.0	8017
	4	600	2	10	10	-25	65	NBR	341N3196 4	-	495900	1-21	Ex db mb IIC T4 to T6	2.5	2	6.0/8.0	8017
	4	600	2	-	10	-25	65	NBR	341N3196 4	-	495910	0-20	Ex ia IIC T4 to T6	-	0.3 to 3	6.0/8.0	8017
	4	600	2	-	10	-25	65	NBR	341N3196 4	2995	496125	2-22	Ex nAC nCc IIC T5/T6	-	1.6	6.0/8.0	8017
	4	600	2	-	10	-25	65	NBR	341N3197 14	2995	482740	-	-	-	1.6	6.0/8.0	8017
	4	600	2	10	10	-25	65	NBR	341N3197 14	-	495900	1-21	Ex db mb IIC T4 to T6	2.5	2	6.0/8.0	8017
	4	600	2	-	10	-25	65	NBR	341N3197 14	-	495910	0-20	Ex ia IIC T4 to T6	-	0.3 to 3	6.0/8.0	8017
	4	600	2	-	10	-25	65	NBR	341N3197 14	2995	496125	2-22	Ex nAC nCc IIC T5/T6	-	1.6	6.0/8.0	8017

Nota:

1. Con comando manuale
2. Utilizzo esclusivo in DC. Minima caduta di tensione 15% del voltaggio nominale (vecchia DIN19251)
3. Pilota con tenuta in FKM
4. Pilota con tenuta in PUR

In questa pagina	Raccordi	Orifizio (mm)	Qn (l/min)	Press. Diff. (bar)	Temp. Fluido (°C)	Temp. Amb. (°C)
da	1/8"-1/4"	4	600	10	-40	-25
a	1/8"-1/4"	4	600	10	80	50

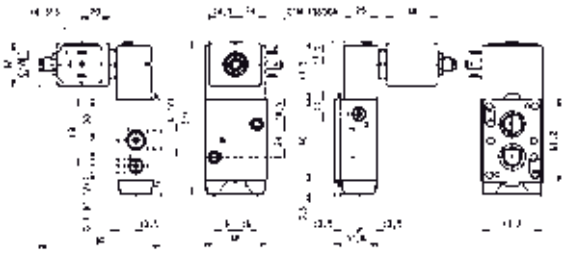

Disegno 7295

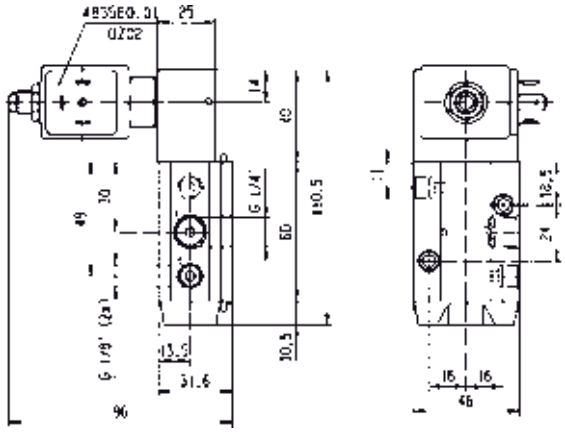

Disegno 7349

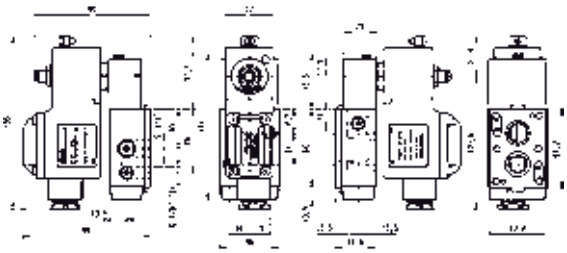

Disegno 8017

3/2-5/2 VALVOLE PNEUMATICHE 3/2 E 5/2 PER CONTROLLO ATTUATORI (NAMUR)

SERVOPILOTATA

ALLUMINIO ANODIZZATO NAMUR

ATTUAZIONE A SOLENOIDE - RITORNO A MOLLA

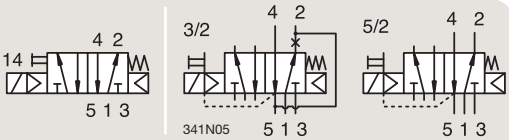

Raccordi BSP	Orifizio Ø 1 mm	Fattore Portata Qn l/min	Pressione differenziale Min bar	Mass AC bar	Mass DC bar	Temp. Fluido Min °C	Mass °C	Tenuta	Valvola PARKER LUCIFER® Valvola	Housing	Bobina	Zona ATEX	Modo di Protezione	Potenza AC W	DC W	Gruppo Elettrico	Disegno nr.
1/8"-1/4"	8	1400	2	-	10	-25	55	NBR	**341N3290**	**2995**	**483580,01**	0-20	Ex ia IIC T6	-	0.5 to 3	7.0/8.0	7350
	8	1400	2	-	10	-25	75	NBR	**341N3290**	**-**	**488660,01**	0-20	Ex ia IIC T6	-	0.3 to 3	7.0/8.0	7350
	8	1400	2	-	10	-25	75	NBR	**341N3290**	**-**	**495910**	0-20	Ex ia IIC T4 to T6	-	0.3 to 3	7.0/8.0	7350
	8	1400	2	-	10	-20	80	NBR	**341N3296**	**2995**	**482740**	-	-	-	1.6	6.0/8.0	8029
	8	1400	2	10	10	-20	80	NBR	**341N3296**	**-**	**495900**	1-21	Ex db mb IIC T4 to T6	2.5	2	6.0/8.0	8029
	8	1400	2	-	10	-20	80	NBR	**341N3296**	**-**	**495910**	0-20	Ex ia IIC T4 to T6	-	0.3 to 3	6.0/8.0	8029
	8	1400	2	-	10	-20	80	NBR	**341N3296**	**2995**	**496125**	2-22	Ex nAC nCc IIC T5/T6	-	1.6	6.0/8.0	8029
	8	1400	2	-	10	-20	80	NBR	**341N3297** [1]	**2995**	**482740**	-	-	-	1.6	6.0/8.0	8029
	8	1400	2	10	10	-20	80	NBR	**341N3297** [1]	**-**	**495900**	1-21	Ex db mb IIC T4 to T6	2.5	2	6.0/8.0	8029
	8	1400	2	-	10	-20	80	NBR	**341N3297** [1]	**-**	**495910**	0-20	Ex ia IIC T4 to T6	-	0.3 to 3	6.0/8.0	8029
	8	1400	2	-	10	-20	80	NBR	**341N3297** [1]	**2995**	**496125**	2-22	Ex nAC nCc IIC T5/T6	-	1.6	6.0/8.0	8029
1/4"	7	1250	2.5	10	10	-10	50	NBR	**341N05** [1]	**-**	**496131**	-	-	3	3	1.2	8162
	7	1250	2.5	10	10	-10	50	NBR	**341N05** [1]	**-**	**496482**	-	-	3	3	1.2	8162
	7	1250	2.5	10	10	-10	50	NBR	**341N05** [1]	**-**	**496637**	22	Ex tc IIIC T95°C	3	3	1.2	8162

Nota:

1. Con comando manuale

In questa pagina	Raccordi	Orifizio (mm)	Qn (l/min)	Press. Diff. (bar)	Temp. Fluido (°C)	Temp. Amb. (°C)
da	1/8''-1/4''	7	1250	10	-25	-25
a	1/4''	8	1400	10	80	50

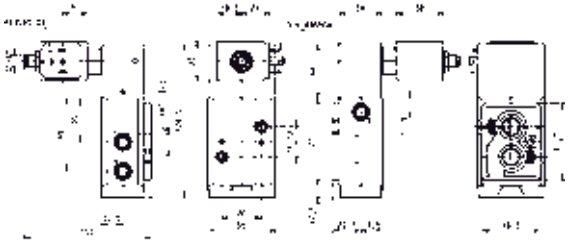

Disegno 7350

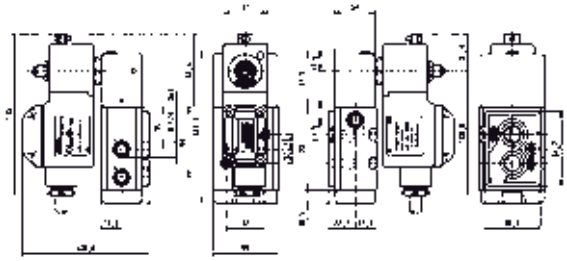

Disegno 8029

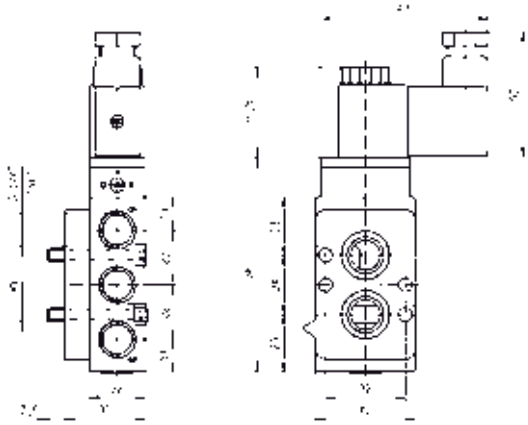

Disegno 8162

3/2-5/2 VALVOLE PNEUMATICHE 3/2 E 5/2 PER CONTROLLO ATTUATORI (NAMUR)

SERVOPILOTATA

ALLUMINIO ANODIZZATO NAMUR

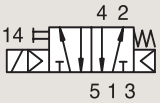

ATTUAZIONE A SOLENOIDE - RITORNO A MOLLA

Raccordi	Orifizio Ø	Fattore Portata	Pressione differenziale			Temp. Fluido		Tenuta	Valvola PARKER LUCIFER®			Zona ATEX	Modo di Protezione	Potenza		Gruppo Elettrico	Disegno nr.
	1		Min	Mass		Min	Mass		Valvola	Housing	Bobina						
BSP	mm	Qn l/min	bar	AC bar	DC bar	°C	°C							AC W	DC W		
1/4"	7	1200	2.5	10	10	-10	50	NBR	341N0502	-	496131	-	-	3	3	1.2	8253
	7	1200	2.5	10	10	-10	50	NBR	341N0502	-	496482	-	-	3	3	1.2	8253
	7	1200	2.5	10	10	-10	50	NBR	341N35 [1]	2995	481865	-	-	8	9	2.1	8213
	7	1200	2.5	10	10	-10	50	NBR	341N35 [1]	2995	495870	2-22 Ex nAC nCc IIC T3/T4		8	9	2.1	8213
	7	1200	2.5	10	10	-10	50	NBR	341N35 [1]	-	495905	1-21 Ex db mb IIC T4		8	8	2.1	8213
	7	1200	2.5	10	10	-10	50	NBR	341N3502	2995	481865	-	-	8	9	2.1	8254
	7	1200	2.5	10	10	-10	50	NBR	341N3502	4270	481000	-	-	8	8	2.1	8254
	8	1400	2	10	10	-25	80	NBR	341N02 [2]	8993	488980	-	-	2	2.5	1.1	7313

Nota:

1. Con comando manuale
2. Con scarico controllato

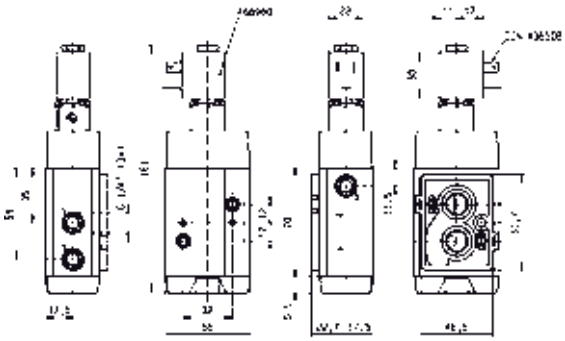

Disegno 7313

In questa pagina	Raccordi	Orifizio (mm)	Qn (l/min)	Press. Diff. (bar)	Temp. Fluido (°C)	Temp. Amb. (°C)
da	1/4"	7	1200	10	-25	-25
a	1/4"	8	1400	10	80	50

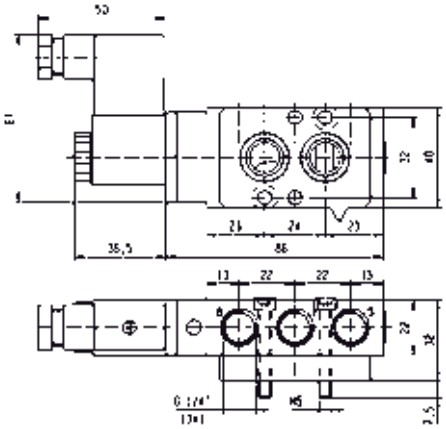

Disegno 8253

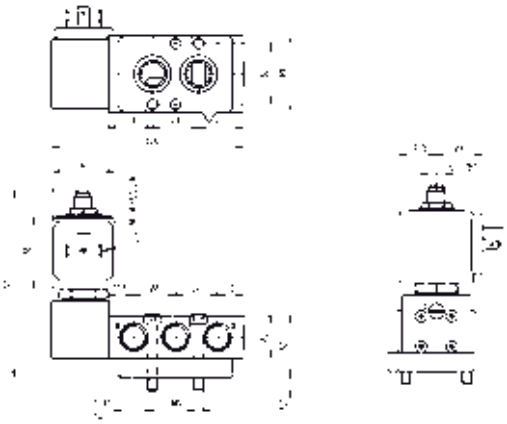

Disegno 8213

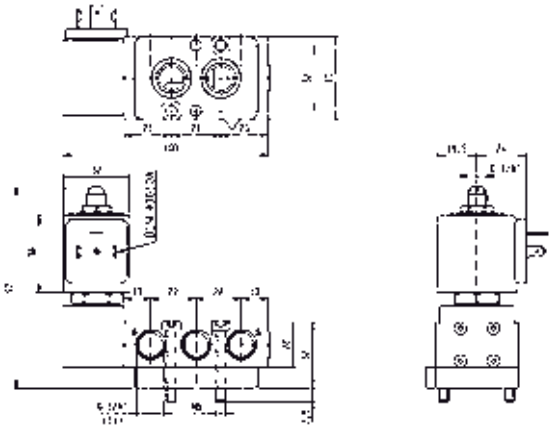

Disegno 8254

3/2-5/2 VALVOLE PNEUMATICHE 3/2 E 5/2 PER CONTROLLO ATTUATORI (NAMUR)

SERVOPILOTATA

ALLUMINIO ANODIZZATO

NAMUR

ATTUAZIONE A SOLENOIDE - RITORNO A MOLLA

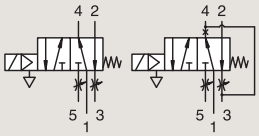

Raccordi	Orifizio Ø	Fattore Portata	Pressione differenziale			Temp. Fluido		Tenuta	Valvola PARKER LUCIFER®			Zona ATEX	Modo di Protezione	Potenza		Gruppo Elettrico	Disegno nr.
	1		Min	Mass		Min	Mass		Valvola	Housing	Bobina						
BSP	mm	Qn l/min	bar	AC bar	DC bar	°C	°C							AC W	DC W		
1/4"	8	1400	2	10	10	-25	80	NBR	**341N12** [12]	**8993**	**488980**	-	-	2	2.5	1.1	7312
	8	1400	2	10	10	-25	80	NBR	**341N22** [1]	**2995**	**481865**	-	-	8	9	2.1	7318
	8	1400	2	10	10	-25	80	NBR	**341N22** [1]	**4270**	**481000**	-	-	8	8	2.1	7318
	8	1400	2	10	10	-25	80	NBR	**341N32** [1]	**2995**	**481865**	-	-	8	9	2.1	7317
	8	1400	2	10	10	-25	80	NBR	**341N32** [1]	**2995**	**495870**	2-22	Ex nAC nCc IIC T3/T4	8	9	2.1	7317
	8	1400	2	10	10	-25	80	NBR	**341N32** [1]	**-**	**495905**	1-21	Ex db mb IIC T4	8	8	2.1	7317
	8	1400	2	10	10	-25	80	NBR	**341N3202**	**2995**	**481865**	-	-	8	9	2.1	7317
	8	1400	2	10	10	-25	80	NBR	**341N3202**	**2995**	**495870**	2-22	Ex nAC nCc IIC T3/T4	8	9	2.1	7317
	8	1400	2	10	10	-25	80	NBR	**341N3202**	**-**	**495905**	1-21	Ex db mb IIC T4	8	8	2.1	7317

Nota:

1. Con comando manuale
2. Con scarico controllato

In questa pagina	Raccordi	Orifizio (mm)	Qn (l/min)	Press. Diff. (bar)	Temp. Fluido (°C)	Temp. Amb. (°C)
da	1/4''	8	1400	10	-25	-25
a	1/4''	8	1400	10	80	50

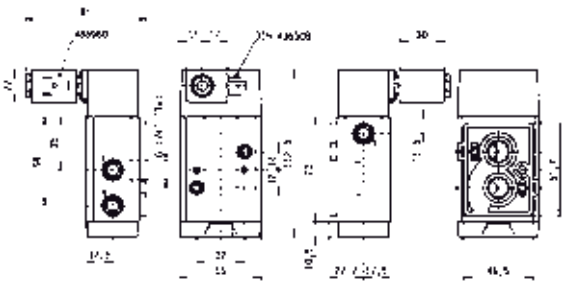

Disegno 7312

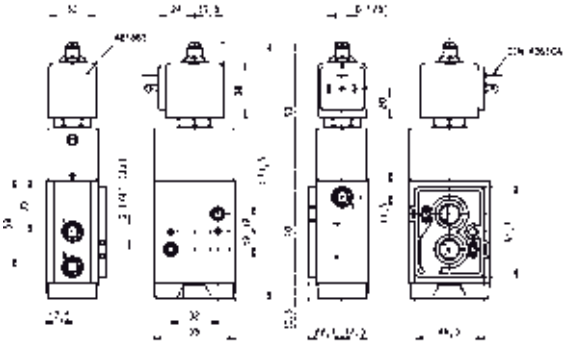

Disegno 7318

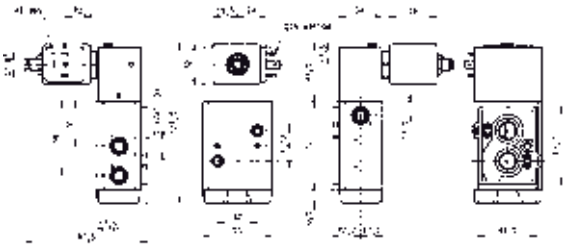

Disegno 7317

5/2 VALVOLE PNEUMATICHE 3/2 E 5/2 PER CONTROLLO ATTUATORI (NAMUR)

SERVOPILOTATA

ALLUMINIO ANODIZZATO

NAMUR

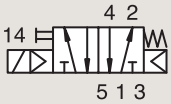

ATTUAZIONE A SOLENOIDE - RITORNO A MOLLA

Raccordi	Orifizio Ø	Fattore Portata	Pressione differenziale			Temp. Fluido		Tenuta	Valvola PARKER LUCIFER®			Zona ATEX	Modo di Protezione	Potenza		Gruppo Elettrico	Disegno nr.
	1		Min	Mass		Min	Mass		Valvola	Housing	Bobina						
BSP	mm	Qn l/min	bar	AC bar	DC bar	°C	°C							AC W	DC W		
1/4"	7	1250	2.5	10	10	-10	50	NBR	**341N03**[1]	**-**	**496131**	-	-	3	3	1.2	8063
	7	1250	2.5	10	10	-10	50	NBR	**341N03**[1]	**-**	**496482**	-	-	3	3	1.2	8063
	7	1250	2.5	10	10	-10	50	NBR	**341N03**[1]	**-**	**496637**	22	Ex tc IIIC T95°C	3	3	1.2	8063
1/2"	12	3000	2	10	10	-10	50	NBR	**341N04**[1]	**-**	**496131**	-	-	3	3	1.2	8065
	12	3000	2	10	10	-10	50	NBR	**341N04**[1]	**-**	**496482**	-	-	3	3	1.2	8065
	12	3000	2	10	10	-10	50	NBR	**341N04**[1]	**-**	**496637**	22	Ex tc IIIC T95°C	3	3	1.2	8065
	12	3000	2.5	10	10	-10	50	NBR	**341N34**[12]	**2995**	**481865**	-	-	8	9	2.1	8211
	12	3000	2.5	10	10	-10	50	NBR	**341N34**[12]	**2995**	**495870**	2-22	Ex nAC nCc IIC T3/T4	8	9	2.1	8211
	12	3000	2.5	10	10	-10	50	NBR	**341N34**[12]	**-**	**495905**	1-21	Ex db mb IIC T4	8	8	2.1	8211

Nota:

1. Con comando manuale
2. Pilota con tenuta in FKM

In questa pagina	Raccordi	Orifizio (mm)	Qn (l/min)	Press. Diff. (bar)	Temp. Fluido (°C)	Temp. Amb. (°C)
da	1/4"	7	1250	10	-10	-10
a	1/2"	12	3000	10	50	50

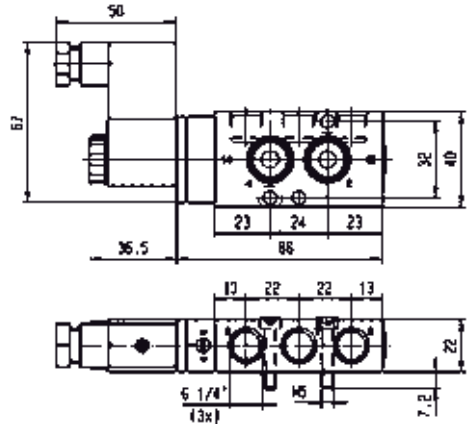

Disegno 8063

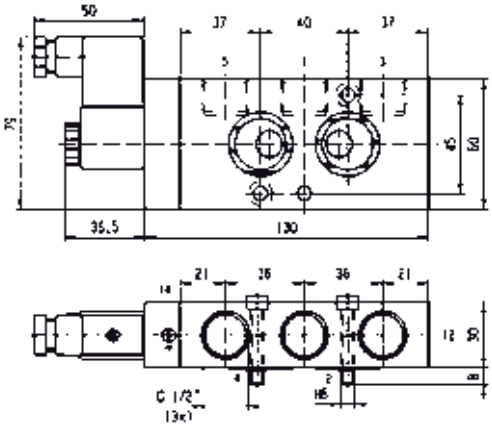

Disegno 8065

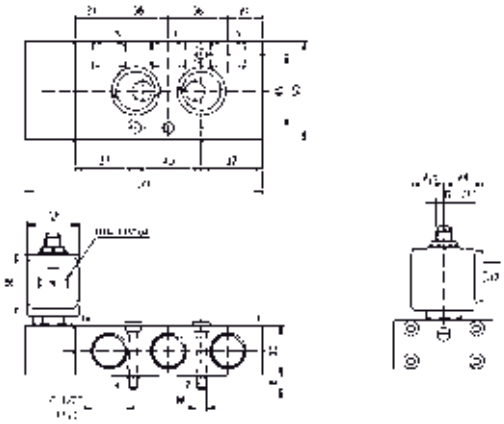

Disegno 8211

5/2 VALVOLE PNEUMATICHE 3/2 E 5/2 PER CONTROLLO ATTUATORI (NAMUR)

SERVOPILOTATA

ALLUMINIO ANODIZZATO

NAMUR

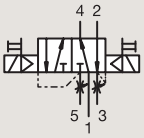

DOPPIO SOLENOIDE

Raccordi	Orifizio Ø	Fattore Portata	Pressione differenziale			Temp. Fluido		Tenuta	Valvola PARKER LUCIFER®			Zona ATEX	Modo di Protezione	Potenza		Gruppo Elettrico	Disegno nr.
	1		Min	Mass		Min	Mass		Valvola	Housing	Bobina						
BSP	mm	Qn l/min	bar	AC bar	DC bar	°C	°C							AC W	DC W		
1/8"-1/4"	4	400	2	10	10	-25	50	NBR	**347N11 [123]**	**-**	**482606**	1-21	Ex mb IIC T4/T5	2	2.5	1.1	7305
	4	400	2	10	10	-25	80	NBR	**347N11 [123]**	**8993**	**488980**	-	-	2	2.5	1.1	7305
	4	400	2	10	10	-25	80	NBR	**347N31 [13]**	**2995**	**481865**	-	-	8	9	2.1	7297
	4	400	2	10	10	-25	80	NBR	**347N31 [13]**	**2995**	**495870**	2-22	Ex nAC nCc IIC T3/T4	8	9	2.1	7297
	4	400	2	10	10	-25	80	NBR	**347N31 [13]**	**-**	**495905**	1-21	Ex db mb IIC T4	8	8	2.1	7297
	4	400	2	-	10	-25	55	NBR	**347N3190 [3]**	**2995**	**483580,01**	0-20	Ex ia IIC T6	-	0.5 to 3	7.0/8.0	8141
	4	400	2	-	10	-25	65	NBR	**347N3197 [14]**	**2995**	**482740**	-	-	-	1.6	3.0/6.0/8.0	7297
	4	400	2	10	10	-25	65	NBR	**347N3197 [14]**	**-**	**495900**	1-21	Ex db mb IIC T4 to T6	2.5	2	3.0/6.0/8.0	7297
	4	400	2	-	10	-25	65	NBR	**347N3197 [14]**	**-**	**495910**	0-20	Ex ia IIC T4 to T6	-	0.3 to 3	3.0/6.0/8.0	7297
	4	400	2	-	10	-25	65	NBR	**347N3197 [14]**	**2995**	**496125**	2-22	Ex nAC nCc IIC T5/T6	-	1.6	3.0/6.0/8.0	7297

Nota:

1. Con comando manuale
2. Con scarico controllato
3. Pilota con tenuta in FKM
4. Pilota con tenuta in PUR

In questa pagina	Raccordi	Orifizio (mm)	Qn (l/min)	Press. Diff. (bar)	Temp. Fluido (°C)	Temp. Amb. (°C)
da	1/8''-1/4''	4	400	10	-25	-25
a	1/8''-1/4''	4	400	10	80	50

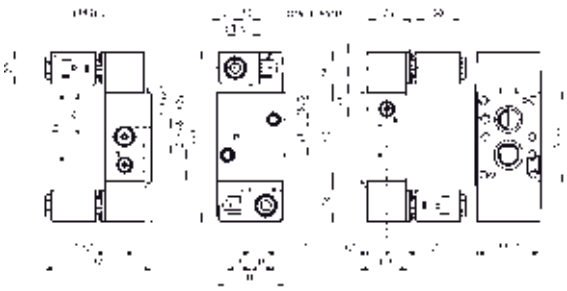

Disegno 7305

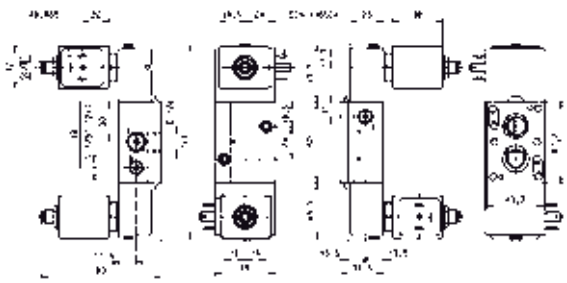

Disegno 7297

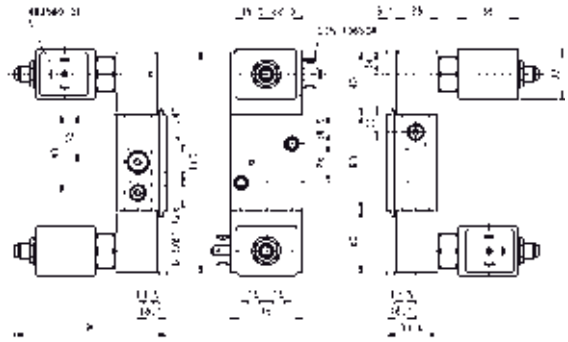

Disegno 8141

5/2 VALVOLE PNEUMATICHE 3/2 E 5/2 PER CONTROLLO ATTUATORI (NAMUR)

SERVOPILOTATA

ALLUMINIO ANODIZZATO

NAMUR

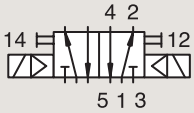

DOPPIO SOLENOIDE

Raccordi	Orifizio Ø	Fattore Portata	Pressione differenziale			Temp. Fluido		Tenuta	Valvola PARKER LUCIFER®			Zona ATEX	Modo di Protezione	Potenza		Gruppo Elettrico	Disegno nr.
	1		Min	Mass		Min	Mass		Valvola	Housing	Bobina						
BSP	mm	Qn l/min	bar	AC bar	DC bar	°C	°C							AC W	DC W		
1/4"	7	1250	1.5	10	10	-10	50	NBR	**347N03** [1]	**-**	**496131**	-	-	3	3	1.2	8057
	7	1250	1.5	10	10	-10	50	NBR	**347N03** [1]	**-**	**496482**	-	-	3	3	1.2	8057
	7	1250	1.5	10	10	-10	50	NBR	**347N03** [1]	**-**	**496637**	22	Ex tc IIIC T95°C	3	3	1.2	8057
	7	1250	2.5	10	10	-10	50	NBR	**347N33** [13]	**2995**	**481865**	-	-	8	9	2.1	8209
	7	1250	2.5	10	10	-10	50	NBR	**347N33** [13]	**2995**	**495870**	2-22	Ex nAC nCc IIC T3/T4	8	9	2.1	8209
	7	1250	2.5	10	10	-10	50	NBR	**347N33** [13]	**-**	**495905**	1-21	Ex db mb IIC T4	8	8	2.1	8209
	8	1400	2	10	10	-10	65	NBR	**347N12** [12]	**-**	**482606**	1-21	Ex mb IIC T4/T5	2	2.5	1.1	7315
	8	1400	2	10	10	-25	80	NBR	**347N12** [12]	**8993**	**488980**	-	-	2	2.5	1.1	7315
	8	1400	2	10	10	-25	80	NBR	**347N32** [13]	**2995**	**481865**	-	-	8	9	2.1	7320
	8	1400	2	10	10	-25	80	NBR	**347N32** [13]	**2995**	**495870**	2-22	Ex nAC nCc IIC T3/T4	8	9	2.1	7320
	8	1400	2	10	10	-25	80	NBR	**347N32** [13]	**-**	**495905**	1-21	Ex db mb IIC T4	8	8	2.1	7320

Nota:

1. Con comando manuale
2. Con scarico controllato
3. Pilota con tenuta in FKM

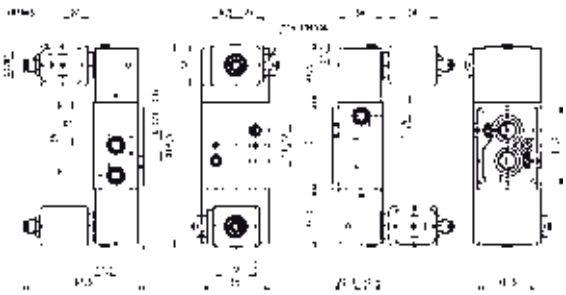

Disegno 7320

In questa pagina	Raccordi	Orifizio (mm)	Qn (l/min)	Press. Diff. (bar)	Temp. Fluido (°C)	Temp. Amb. (°C)
da	1/4"	7	1250	10	-25	-25
a	1/4"	8	1400	10	120	50

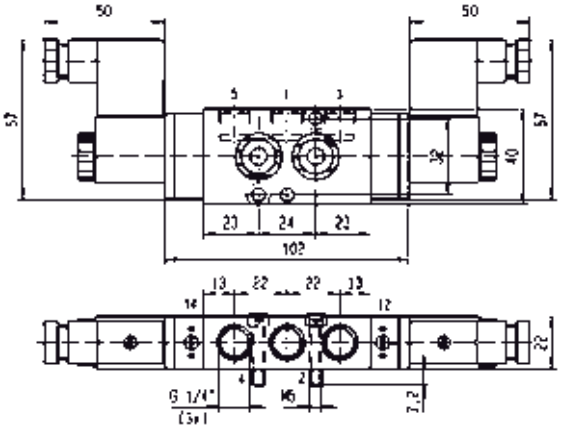

Disegno 8057

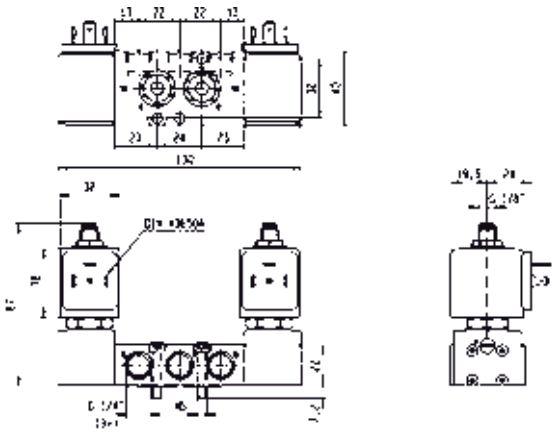

Disegno 8209

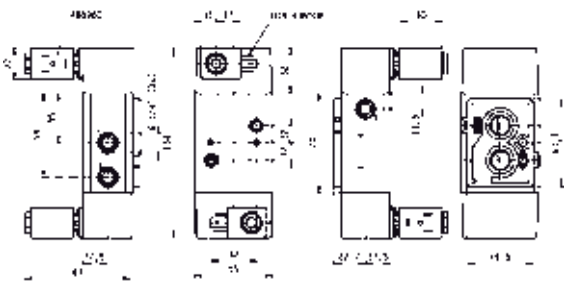

Disegno 7315

5/2 VALVOLE PNEUMATICHE 3/2 E 5/2 PER CONTROLLO ATTUATORI (NAMUR)

SERVOPILOTATA

ALLUMINIO ANODIZZATO

NAMUR

DOPPIO SOLENOIDE

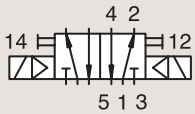

Raccordi	Orifizio Ø	Fattore Portata	Pressione differenziale			Temp. Fluido		Tenuta	Valvola PARKER LUCIFER®			Zona ATEX	Modo di Protezione	Potenza		Gruppo Elettrico	Disegno nr.
	1		Min	Mass		Min	Mass		Valvola	Housing	Bobina						
BSP	mm	Qn l/min	bar	AC bar	DC bar	°C	°C							AC W	DC W		
1/2"	12	3000	1.5	10	10	-10	50	NBR	**347N04**[1]	**-**	**496131**	-	-	3	3	1.2	8154
	12	3000	1.5	10	10	-10	50	NBR	**347N04**[1]	**-**	**496482**	-	-	3	3	1.2	8154
	12	3000	1.5	10	10	-10	50	NBR	**347N04**[1]	**-**	**496637**	22	Ex tc IIIC T95°C	3	3	1.2	8154
	12	3000	2.5	10	10	-10	120	NBR	**347N34**[12]	**2995**	**481865**	-	-	8	9	2.1	8212
	12	3000	2.5	10	10	-10	120	NBR	**347N34**[12]	**2995**	**495870**	2-22	Ex nAC nCc IIC T3/T4	8	9	2.1	8212
	12	3000	2.5	10	10	-10	120	NBR	**347N34**[12]	**-**	**495905**	1-21	Ex db mb IIC T4	8	8	2.1	8212

Nota:

1. Con comando manuale
2. Pilota con tenuta in FKM

In questa pagina	Raccordi	Orifizio (mm)	Qn (l/min)	Press. Diff. (bar)	Temp. Fluido (°C)	Temp. Amb. (°C)
da	1/2''	12	3000	10	-10	-10
a	1/2''	12	3000	10	120	50

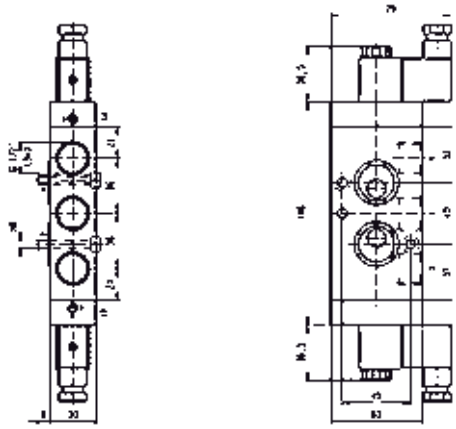

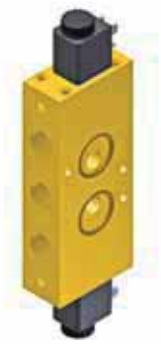

Disegno 8154

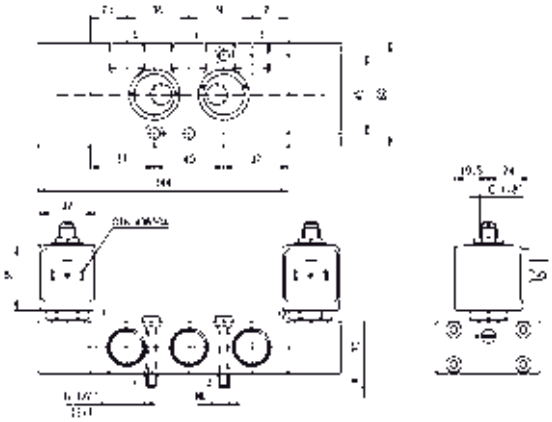

Disegno 8212

5/3 VALVOLE PNEUMATICHE 3/2 E 5/2 PER CONTROLLO ATTUATORI (NAMUR)

SERVOPILOTATA

ALLUMINIO ANODIZZATO NAMUR

W1 CHIUSURA IN POSIZIONE CENTRALE

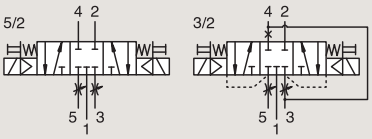

Raccordi BSP	Orifizio Ø 1 mm	Fattore Portata Qn l/min	Pressione differenziale Min bar	Mass AC bar	Mass DC bar	Temp. Fluido Min °C	Temp. Fluido Mass °C	Tenuta	Valvola PARKER LUCIFER® Valvola	Housing	Bobina	Zona ATEX	Modo di Protezione	Potenza AC W	Potenza DC W	Gruppo Elettrico	Disegno nr.
1/8"-1/4"	4	400	2	10	10	-25	80	NBR	342N11 [12]	-	482606	1-21	Ex mb IIC T4/T5	2	2.5	1.1	7305
	4	400	2	10	10	-25	80	NBR	342N11 [12]	8993	488980	-	-	2	2.5	1.1	7305
1/4"	4	400	2	-	10	-10	65	NBR	342N3197 [1]	-	495910	0-20	Ex ia IIC T4 to T6	-	0.3 to 3	6.0/8.0	7297
	7	1250	3	10	10	-10	50	NBR	342N03 [1]	-	496131	-	-	3	3	1.2	8057
	7	1250	3	10	10	-10	50	NBR	342N03 [1]	-	496482	-	-	3	3	1.2	8057
	7	1250	3	10	10	-10	50	NBR	342N03 [1]	-	496637	22	Ex tc IIIC T95°C	3	3	1.2	8057
	7	1250	2.5	10	10	-10	50	NBR	342N33 [1]	2995	481865	-	-	8	9	2.1	8209
	7	1250	2.5	10	10	-10	50	NBR	342N33 [1]	2995	495870	2-22	Ex nAC nCc IIC T3/T4	8	9	2.1	8209
	7	1250	2.5	10	10	-10	50	NBR	342N33 [1]	-	495905	1-21	Ex db mb IIC T4	8	8	2.1	8209

Nota:

1. Con comando manuale
2. Con scarico controllato

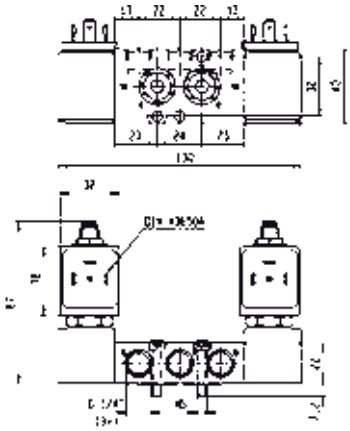

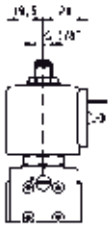

Disegno 8209

In questa pagina	Raccordi	Orifizio (mm)	Qn (l/min)	Press. Diff. (bar)	Temp. Fluido (°C)	Temp. Amb. (°C)
da	1/8"-1/4"	4	400	10	-25	-25
a	1/4"	7	1250	10	120	50

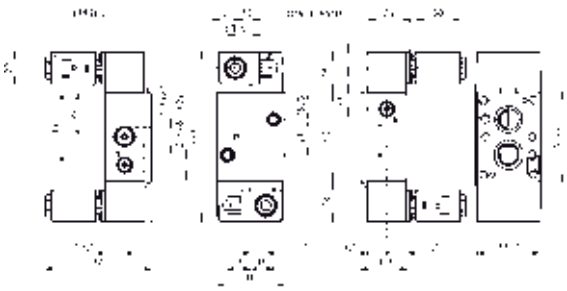

Disegno 7305

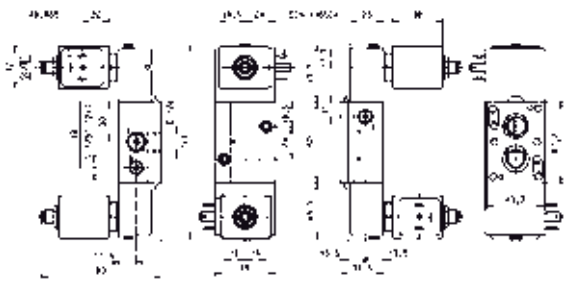

Disegno 7297

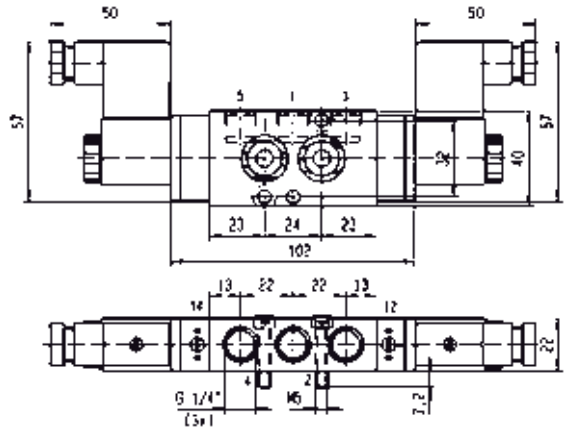

Disegno 8057

5/3 VALVOLE PNEUMATICHE 3/2 E 5/2 PER CONTROLLO ATTUATORI (NAMUR)

SERVOPILOTATA

ALLUMINIO ANODIZZATO

NAMUR

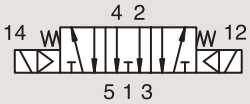

W3 SCARICO IN POSIZIONE CENTRALE

Raccordi	Orifizio Ø	Fattore Portata	Pressione differenziale			Temp. Fluido		Tenuta	Valvola PARKER LUCIFER®			Zona ATEX	Modo di Protezione	Potenza		Gruppo Elettrico	Disegno nr.
	1		Min	Mass		Min	Mass		Valvola	Housing	Bobina						
BSP	mm	Qn l/min	bar	AC bar	DC bar	°C	°C							AC W	DC W		
1/4''	7	1250	3	10	10	-10	50	NBR	343N03 [1]	-	496131	-	-	3	3	1.2	8057
	7	1250	3	10	10	-10	50	NBR	343N03 [1]	-	496482	-	-	3	3	1.2	8057
	7	1250	3	10	10	-10	50	NBR	343N03 [1]	-	496637	22	Ex tc IIIC T95°C	3	3	1.2	8057

Nota:

1. Con comando manuale

In questa pagina	Raccordi	Orifizio (mm)	Qn (l/min)	Press. Diff. (bar)	Temp. Fluido (°C)	Temp. Amb. (°C)
da	1/4''	7	1250	10	-10	-10
a	1/4''	7	1250	10	50	50

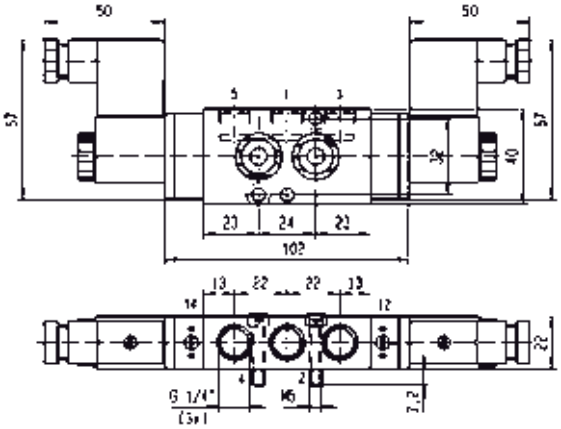

Disegno 8057

3/2-5/2 VALVOLE PNEUMATICHE 3/2 E 5/2 PER CONTROLLO ATTUATORI (NAMUR)

SERVOPILOTATA

ALLUMINIO ANODIZZATO NAMUR

CONTROLLO CON IMPULSI ELETTRICI

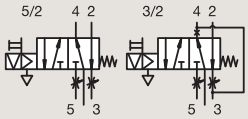

Raccordi BSP	Orifizio Ø 1 mm	Fattore Portata Qn l/min	Pressione differenziale Min bar	Pressione differenziale Mass AC bar	Pressione differenziale Mass DC bar	Temp. Fluido Min °C	Temp. Fluido Mass °C	Tenuta	Valvola PARKER LUCIFER® Valvola	Valvola PARKER LUCIFER® Housing	Valvola PARKER LUCIFER® Bobina	Zona ATEX	Modo di Protezione	Potenza AC W	Potenza DC W	Gruppo Elettrico	Disegno nr.
1/8"-1/4"	4	600	2	-	10	-25	80	NBR	**345N31 12**	**4269**	**485400**	-	-	-	13	4.0	7295

Nota:

1. Con comando manuale
2. Pilota con tenuta in FKM

ALLUMINIO ANODIZZATO NAMUR

ATTUAZIONE A SOLENOIDE - RITORNO A MOLLA

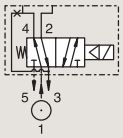

Raccordi BSP	Orifizio Ø 1 mm	Fattore Portata Qn l/min	Pressione differenziale Min bar	Pressione differenziale Mass AC bar	Pressione differenziale Mass DC bar	Temp. Fluido Min °C	Temp. Fluido Mass °C	Tenuta	Valvola PARKER LUCIFER® Valvola	Valvola PARKER LUCIFER® Housing	Valvola PARKER LUCIFER® Bobina	Zona ATEX	Modo di Protezione	Potenza AC W	Potenza DC W	Gruppo Elettrico	Disegno nr.
1/8"-1/4"	4	355	1	10	10	-10	75	NBR	**341L9504 12**	**-**	**482605**	1-21	Ex mb IIC T4	4	5	1.1	7009
	4	355	1	10	10	-10	75	NBR	**341L9504 12**	**-**	**482606**	1-21	Ex mb IIC T4/T5	2	2.5	1.1	7009
	4	355	1	10	10	-10	75	NBR	**341L9504 12**	**8993**	**488980**	-	-	2	2.5	1.1	7009
	4	355	1	10	10	-10	75	NBR	**341L9504 12**	**8993**	**495865**	2-22	Ex nAC IIC T5	2	2.5	1.1	7009
	4	355	1	10	10	-10	75	NBR	**341L9534 12**	**2995**	**481865**	-	-	8	9	2.1/7.0	3990
	4	355	1	10	10	-10	75	NBR	**341L9534 12**	**2995**	**495870**	2-22	Ex nAC nCc IIC T3/T4	8	9	2.1/7.0	3990
	4	355	1	10	10	-10	75	NBR	**341L9534 12**	**-**	**495905**	1-21	Ex db mb IIC T4	8	8	2.1/7.0	3990

Nota:

1. Con comando manuale
2. Pilota con tenuta in FKM

In questa pagina	Raccordi	Orifizio (mm)	Qn (l/min)	Press. Diff. (bar)	Temp. Fluido (°C)	Temp. Amb. (°C)
da	1/8''-1/4''	4	355	10	-25	-25
a	1/8''-1/4''	4	600	10	80	50

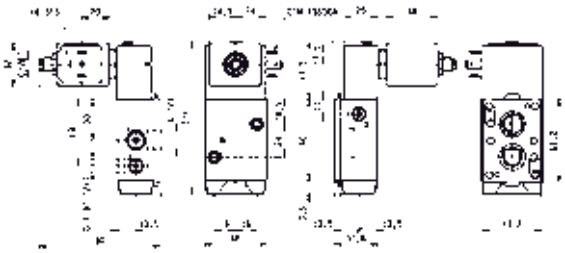

Disegno 7295

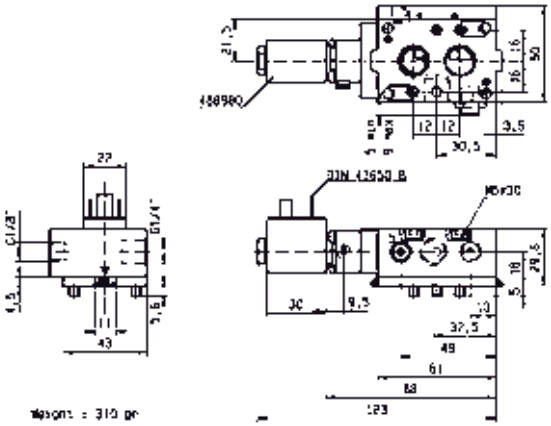

Disegno 7009

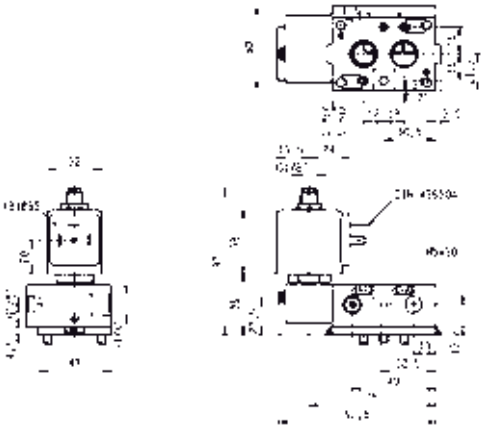

Disegno 3990

3/2-5/2 VALVOLE PNEUMATICHE 3/2 E 5/2 PER CONTROLLO ATTUATORI (NAMUR)

SERVOPILOTATA

ALLUMINIO ANODIZZATO

NAMUR

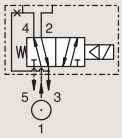

ATTUAZIONE A SOLENOIDE - RITORNO A MOLLA

Raccordi	Orifizio Ø	Fattore Portata	Pressione differenziale			Temp. Fluido		Tenuta	Valvola PARKER LUCIFER®			Zona ATEX	Modo di Protezione	Potenza		Gruppo Elettrico	Disegno nr.
	1		Min	Mass		Min	Mass		Valvola	Housing	Bobina						
BSP	mm	Qn l/min	bar	AC bar	DC bar	°C	°C							AC W	DC W		
1/8"-1/4"	4	355	2	-	10	-10	55	NBR	**341L9594** [12]	**2995**	**483580,01**	0-20	Ex ia IIC T6	-	0.5 to 3	7.0	3992
	4	355	1	-	10	-10	75	NBR	**341L9594** [12]	**-**	**495910**	0-20	Ex ia IIC T4 to T6	-	0.3 to 3	7.0	3992
	4	355	2	-	10	-10	75	NBR	**341L9597** [13]	**2995**	**482740**	-	-	-	1.6	6.0/8.0	8025
	4	355	2	10	10	-10	75	NBR	**341L9597** [13]	**-**	**495900**	1-21	Ex db mb IIC T4 to T6	2.5	2	6.0/8.0	8025
	4	355	2	-	10	-10	75	NBR	**341L9597** [13]	**-**	**495910**	0-20	Ex ia IIC T4 to T6	-	0.3 to 3	6.0/8.0	8025
	4	355	2	-	10	-10	75	NBR	**341L9597** [13]	**2995**	**496125**	2-22	Ex nAC nCc IIC T5/T6	-	1.6	6.0/8.0	8025
	4	355	2	-	10	-25	55	NBR	**341L9598** [3]	**2995**	**483580,01**	0-20	Ex ia IIC T6	-	0.5 to 3	7.0	3992

Nota:

1. Con comando manuale
2. Pilota con tenuta in FKM
3. Pilota con tenuta in PUR

In questa pagina	Raccordi	Orifizio (mm)	Qn (l/min)	Press. Diff. (bar)	Temp. Fluido (°C)	Temp. Amb. (°C)
da	1/8''-1/4''	4	355	10	-25	-10
a	1/8''-1/4''	4	600	10	75	50

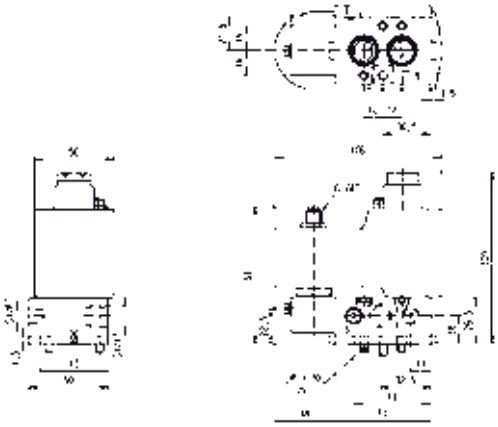

Disegno 3992

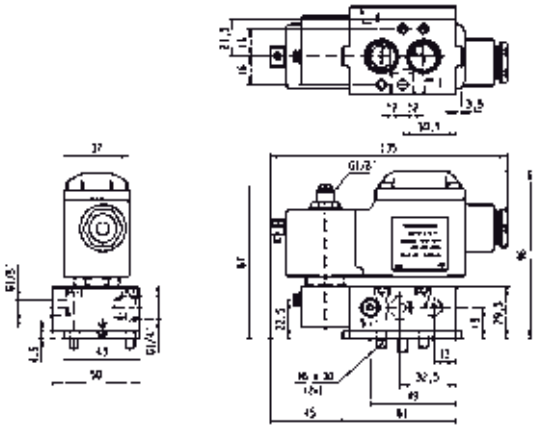

Disegno 8025

3/2 VALVOLE PNEUMATICHE 3/2 E 5/2 PER CONTROLLO ATTUATORI (NAMUR)

PILOTAGGIO ESTERNO

ALLUMINIO ANODIZZATO NAMUR

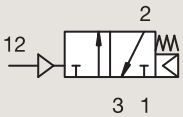

PILOTAGGIO ESTERNO - RITORNO A MOLLA

Raccordi	Orifizio Ø	Fattore Portata	Pressione differenziale			Temp. Fluido		Tenuta	Valvola PARKER LUCIFER®			Zona ATEX	Modo di Protezione	Potenza		Gruppo Elettrico	Disegno nr.
	1		Min	Mass		Min	Mass		Valvola	Housing	Bobina						
BSP	mm	Qn l/min	bar	AC bar	DC bar	°C	°C							AC W	DC W		
1/4"	7	1250	2.5	10	10	-10	50	NBR	**531N03**	**-**	**-**	-	-	-	-	-	8058
1/2"	12	3000	2.5	10	10	-10	50	NBR	**531N04**	**-**	**-**	-	-	-	-	-	8061

In questa pagina	Raccordi	Orifizio (mm)	Qn (l/min)	Press. Diff. (bar)	Temp. Fluido (°C)	Temp. Amb. (°C)
da	1/4"	7	1250	10	-10	-10
a	1/2"	12	3000	10	50	50

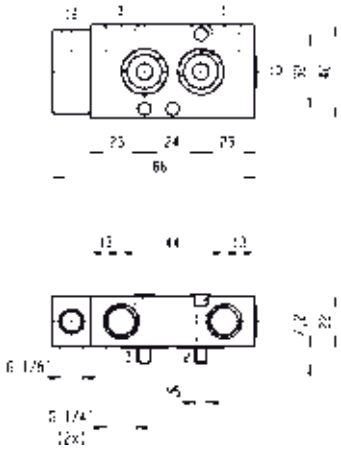

Disegno 8058

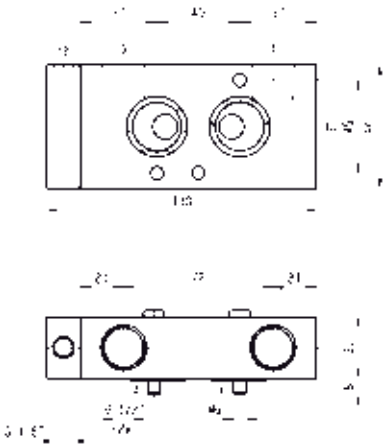

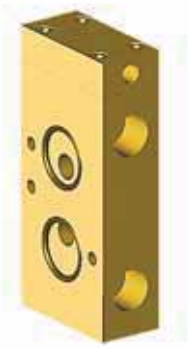

Disegno 8061

3/2-5/2 VALVOLE PNEUMATICHE 3/2 E 5/2 PER CONTROLLO ATTUATORI (NAMUR)

PILOTAGGIO ESTERNO

ALLUMINIO ANODIZZATO NAMUR

ATTUAZIONE AD ARIA - RITORNO A MOLLA

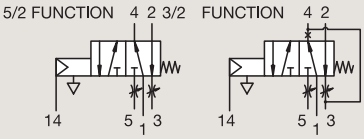

Raccordi	Orifizio Ø	Fattore Portata	Pressione differenziale			Temp. Fluido		Tenuta	Valvola PARKER LUCIFER®			Zona ATEX	Modo di Protezione	Potenza		Gruppo Elettrico	Disegno nr.
	1		Min	Mass		Min	Mass		Valvola	Housing	Bobina						
BSP	mm	Qn l/min	bar	AC bar	DC bar	°C	°C							AC W	DC W		
1/8''-1/4''	4	600	2	10	10	-25	80	NBR	**541N01**	-	-	-	-	-	-	-	7309
	4	600	2	10	10	-40	50	NBR	**541N0108**	-	-	-	-	-	-	-	7309

In questa pagina	Raccordi	Orifizio (mm)	Qn (l/min)	Press. Diff. (bar)	Temp. Fluido (°C)	Temp. Amb. (°C)
da	1/8''-1/4''	4	600	10	-40	-40
a	1/8''-1/4''	4	600	10	80	50

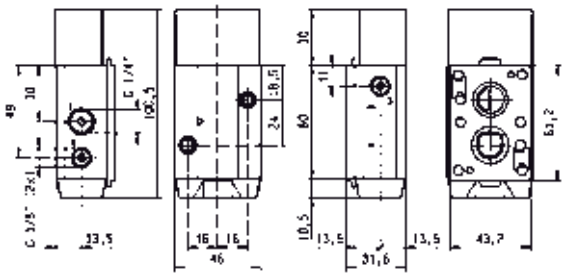

Disegno 7309

5/2 VALVOLE PNEUMATICHE 3/2 E 5/2 PER CONTROLLO ATTUATORI (NAMUR)

PILOTAGGIO ESTERNO

ALLUMINIO ANODIZZATO NAMUR

ATTUAZIONE AD ARIA - RITORNO A MOLLA

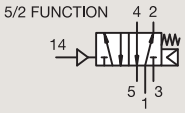

Raccordi	Orifizio Ø	Fattore Portata	Pressione differenziale			Temp. Fluido		Tenuta	Valvola PARKER LUCIFER®			Zona ATEX	Modo di Protezione	Potenza		Gruppo Elettrico	Disegno nr.
	1		Min	Mass		Min	Mass		Valvola	Housing	Bobina						
BSP	mm	Qn l/min	bar	AC bar	DC bar	°C	°C							AC W	DC W		
1/4"	7	1250	2.5	10	10	-10	50	NBR	541N03	-	-	-	-	-	-	-	8064
1/2"	12	3000	2.5	10	10	-10	50	NBR	541N04	-	-	-	-	-	-	-	8066

ALLUMINIO ANODIZZATO NAMUR

ATTUAZIONE E RITORNO AD ARIA

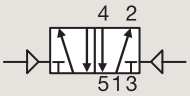

Raccordi	Orifizio Ø	Fattore Portata	Pressione differenziale			Temp. Fluido		Tenuta	Valvola PARKER LUCIFER®			Zona ATEX	Modo di Protezione	Potenza		Gruppo Elettrico	Disegno nr.
	1		Min	Mass		Min	Mass		Valvola	Housing	Bobina						
BSP	mm	Qn l/min	bar	AC bar	DC bar	°C	°C							AC W	DC W		
1/4"	7	1250	2.5	10	10	-10	50	NBR	547N03	-	-	-	-	-	-	-	8059

In questa pagina	Raccordi	Orifizio (mm)	Qn (l/min)	Press. Diff. (bar)	Temp. Fluido (°C)	Temp. Amb. (°C)
da	1/4"	7	1250	10	-10	-10
a	1/2"	12	3000	10	50	50

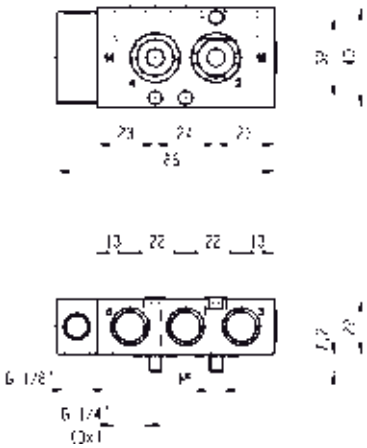

Disegno 8064

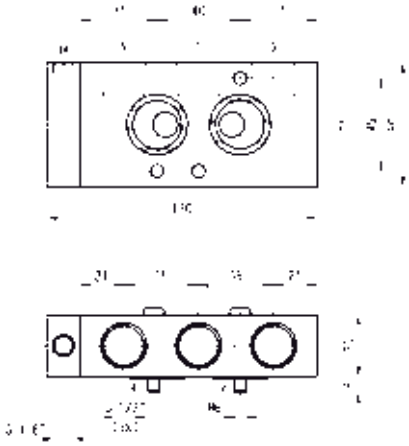

Disegno 8066

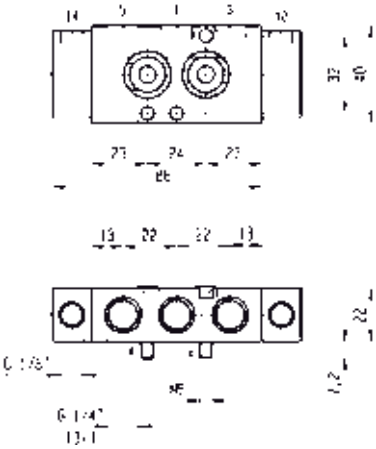

Disegno 8059

5/3 VALVOLE PNEUMATICHE 3/2 E 5/2 PER CONTROLLO ATTUATORI (NAMUR)

PILOTAGGIO ESTERNO

ALLUMINIO ANODIZZATO

NAMUR

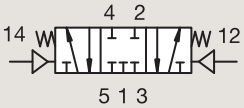

W1 CHIUSURA IN POSIZIONE CENTRALE

Raccordi	Orifizio Ø	Fattore Portata	Pressione differenziale			Temp. Fluido		Tenuta	Valvola PARKER LUCIFER®			Zona ATEX	Modo di Protezione	Potenza		Gruppo Elettrico	Disegno nr.
	1		Min	Mass		Min	Mass		Valvola	Housing	Bobina						
BSP	mm	Qn l/min	bar	AC bar	DC bar	°C	°C							AC W	DC W		
1/4"	7	1250	2.5	10	10	-10	50	NBR	542N03	-	-	-	-	-	-	-	8059

In questa pagina	Raccordi	Orifizio (mm)	Qn (l/min)	Press. Diff. (bar)	Temp. Fluido (°C)	Temp. Amb. (°C)
da	1/4"	7	1250	10	-10	-10
a	1/4"	7	1250	10	50	50

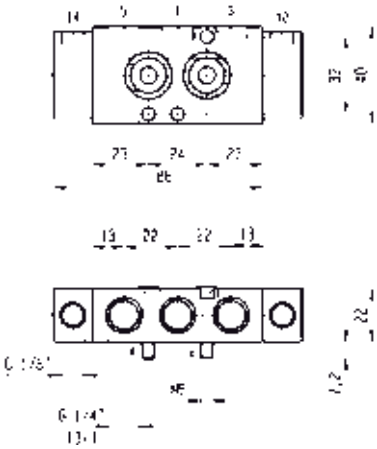

Disegno 8059

VALVOLE 3/2 E 5/2 PER CONTROLLO ATTUATORI (RACCORDI E NAMUR) IN AISI316L

3/2

Azionamento	Corpo	Funzione	Raccordi	Orifizio (mm)	Fattore Portata	Pressione Differenziale Mass. (Bar)	Tem. Mass. Fluido	Pagina Elettrovalvola Parker	Pagina Elettrovalvola Parker LUCIFER®
Comando diretto	AISI316L/Raccordi	Universale	1/4''	2 a 6	680	12	80	-	376
			3/8''	6	680	10	75	-	382
	AISI316L/Sottobase	Normalmente chiusa	5 mm	2.5	220	14	80	-	384
			6 mm	2.5	220	10	75	-	384
		Universale	1/4''	6	680	10	65	-	384
	AISI316L/Namur	Normalmente chiusa	3/8''	6	680	10	75	-	386
Servopilotata	AISI316L/Raccordi	Normalmente chiusa	3/8''	8	1400	10	80	-	388
	AISI316L/Raccordi/ Spool	Normalmente chiusa	3/8''	8	1400	10	80	-	388
		Doppio solenoide	3/8''	8	1400	10	80	-	392
	AISI316L/Namur/ Spool	Normalmente chiusa	3/8''-1/4''	8	1400	10	80	-	394
		Attuazione a solenoide - ritorno a molla	3/8''-1/4''	8	1400	10	80	-	396
		Doppio solenoide	3/8''-1/4''	8	1400	10	80	-	398
Riarmo manuale	AISI316L/Raccordi	Universale	1/4''	6	680	10	75	-	400
			3/8''	6	680	10	65	-	404

3/2

VALVOLE 3/2 E 5/2 PER CONTROLLO ATTUATORI (RACCORDI E NAMUR) IN AISI316L
COMANDO DIRETTO

AISI 316L
MONTAGGIO SU RACCORDI
UNIVERSALE

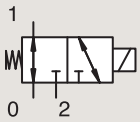

Raccordi	Orifizio Ø 1 mm	Fattore Portata Qn l/min	Pressione differenziale Min bar	Pressione differenziale Mass AC bar	Pressione differenziale Mass DC bar	Temp. Fluido Min °C	Temp. Fluido Mass °C	Tenuta	Valvola PARKER LUCIFER® Valvola	Valvola PARKER LUCIFER® Housing	Valvola PARKER LUCIFER® Bobina	Zona ATEX	Modo di Protezione	Potenza AC W	Potenza DC W	Gruppo Elettrico	Disegno nr.
1/4" NPT	2	140	0	12	12	-25	65	FKM	U133V5595 [1]	-	492310	1-21	Ex eb mb II T3 to T6	6	6	9.0/10.1	6713
	2	140	0	-	12	-25	75	FKM	U133V5595 [1]	-	492965.01	0-20	Ex ia IIC T6	-	0.3 to 3	9.0/10.1	6713
	2	140	0	12	12	-25	65	FKM	U133V5595 [1]	-	496800	1-21	Ex db mb IIC T4	8	8	9.0/10.1	6713
	2	140	0	12	12	-25	80	FKM	U133V55951D [1]	-	483270.02	1-21	Ex db IIC T4 to T6	8	8	11.0	6714
	2	140	0	12	12	-25	65	FKM	U133V7595	-	492310	1-21	Ex eb mb II T3 to T6	6	6	9.0/10.1	8166
	2	140	0	-	12	-25	60	FKM	U133V7595	-	492965.01	0-20	Ex ia IIC T6	-	0.3 to 3	9.0/10.1	8166
	2	140	0	-	12	-25	65	FKM	U133V7595	-	496565	0-20	Ex ia IIC T4 to T6	-	0.3	9.0/10.1	8166
	2.5	220	0	-	8.5	-25	75	FKM	U133V5695 [1]	-	492210	1-21	Ex eb mb II T3 to T6	-	1.8	9.0/10.1	6713
	2.5	220	0	-	8.5	-25	75	FKM	U133V5695 [1]	-	492965.01	0-20	Ex ia IIC T6	-	1.8	9.0/10.1	6713
	2.5	220	0	8.5	8.5	-25	75	FKM	U133V5695 [1]	-	496800	1-21	Ex db mb IIC T4	8	8	9.0/10.1	6713
	2.5	220	0	8.5	8.5	-10	75	FKM	U133V56951D [12]	-	483270.02	1-21	Ex db IIC T4 to T6	8	8	11.0	6714
	2.5	220	0	8.5	8.5	-25	75	FKM	U133V7695	-	492310	1-21	Ex eb mb II T3 to T6	6	6	9.0/10.1	8166
	2.5	220	0	-	8.5	-25	65	FKM	U133V7695	-	492965.01	0-20	Ex ia IIC T6	-	0.3 to 3	9.0/10.1	8166
	2.5	220	0	-	8.5	-25	65	FKM	U133V7695	-	496565	0-20	Ex ia IIC T4 to T6	-	0.3	9.0/10.1	8166

Nota:

1. Valvole compatibili unicamente con olio idraulico e aria/gas neutri
2. Valvola consegnato con un certificato di tracciabilità dei materiali

In questa pagina	Raccordi	Orifizio (mm)	Qn (l/min)	Press. Diff. (bar)	Temp. Fluido (°C)	Temp. Amb. (°C)
da	1/4"	2	140	8.5	-25	-25
a	1/4"	2.5	220	12	80	50

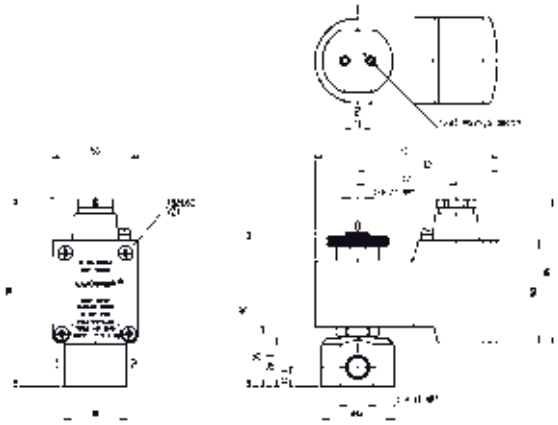

Disegno 6713

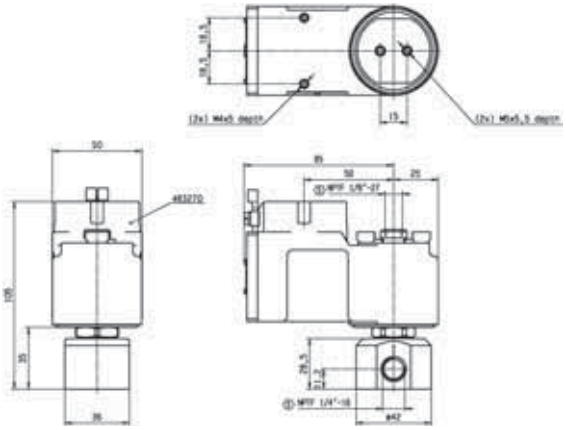

Disegno 6714

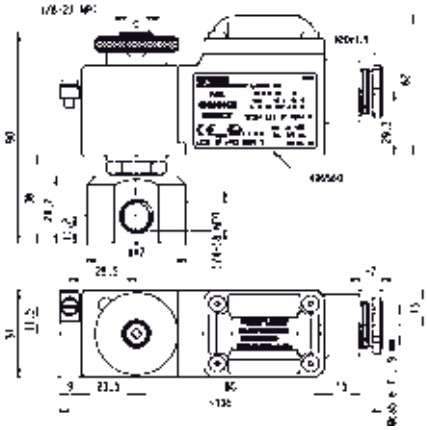

Disegno 8166

3/2 VALVOLE 3/2 E 5/2 PER CONTROLLO ATTUATORI (RACCORDI E NAMUR) IN AISI316L

COMANDO DIRETTO

AISI 316L

MONTAGGIO SU RACCORDI

UNIVERSALE

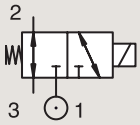

Raccordi	Orifizio Ø 1 mm	Fattore Portata Qn l/min	Pressione differenziale Min bar	Pressione differenziale Mass AC bar	Pressione differenziale Mass DC bar	Temp. Fluido Min °C	Temp. Fluido Mass °C	Tenuta	Valvola PARKER LUCIFER® Valvola	Valvola PARKER LUCIFER® Housing	Valvola PARKER LUCIFER® Bobina	Zona ATEX	Modo di Protezione	Potenza AC W	Potenza DC W	Gruppo Elettrico	Disegno nr.
1/4" NPTF	6	680	0	10	10	-25	65	NBR	**U133X5152 12**	**-**	**492310**	1-21	Ex eb mb II T3 to T6	6	6	10.1/10.2	7770
	6	680	0	10	10	-25	65	NBR	**U133X5152 12**	**-**	**496700**	1-21	Ex db mb IIC T4 to T6	6	6	10.1/10.2	7770
	6	680	0	-	10	-25	65	NBR	**U133X5156 13**	**-**	**492965.01**	0-20	Ex ia IIC T6	-	0.3 to 3	9.0/10.1/10.2	7770
	6	680	0	10	10	-25	65	NBR	**U133X5156 13**	**-**	**492310**	1-21	Ex eb mb II T3 to T6	6	6	9.0/10.1/10.2	7770
	6	680	0	-	10	-25	65	NBR	**U133X5156 13**	**-**	**492965.01**	0-20	Ex ia IIC T6	-	0.3 to 3	9.0/10.1/10.2	7770
	6	680	0	10	10	-25	65	NBR	**U133X5156 13**	**-**	**496700**	1-21	Ex db mb IIC T4 to T6	6	6	9.0/10.1/10.2	7770
	6	680	0	10	10	-25	75	NBR	**U133X51561D 13**	**-**	**483270.02**	1-21	Ex db IIC T4 to T6	8	8	11.0	7011
	6	680	0	10	10	-25	65	NBR	**U133X5192 23**	**-**	**492310**	1-21	Ex eb mb II T3 to T6	6	6	10.1	6904
	6	680	0	10	10	-25	65	NBR	**U133X5192 23**	**-**	**496700**	1-21	Ex db mb IIC T4 to T6	6	6	10.1	6904
	6	680	0	-	10	-25	65	NBR	**U133X5196 3**	**-**	**492210**	1-21	Ex eb mb II T3 to T6	-	1.8	9.0/10.1/10.2	6904
	6	680	0	-	10	-25	65	NBR	**U133X5196 3**	**-**	**492965.01**	0-20	Ex ia IIC T6	-	0.3 to 3	9.0/10.1/10.2	6904
	6	680	0	10	10	-25	65	NBR	**U133X5196 3**	**-**	**496700**	1-21	Ex db mb IIC T4 to T6	6	6	9.0/10.1/10.2	6904

Nota:

1. Con comando manuale
2. Utilizzo esclusivo in DC. Minima caduta di tensione 15% del voltaggio nominale (vecchia DIN19251)
3. Valvola consegnato con un certificato di tracciabilità dei materiali

In questa pagina	Raccordi	Orifizio (mm)	Qn (l/min)	Press. Diff. (bar)	Temp. Fluido (°C)	Temp. Amb. (°C)
da	1/4''	6	680	10	-25	-25
a	1/4''	6	680	10	75	65

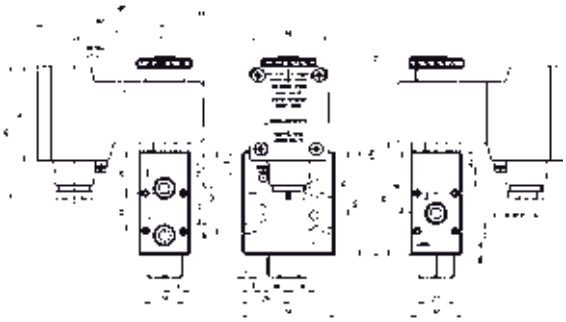

Disegno 7770

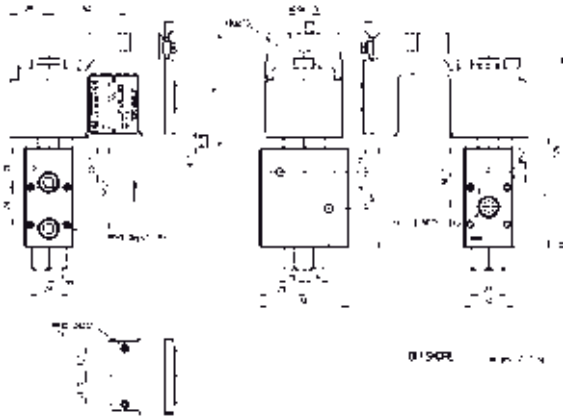

Disegno 7011

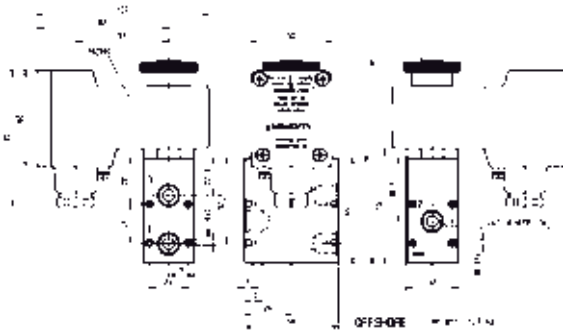

Disegno 6904

3/2

VALVOLE 3/2 E 5/2 PER CONTROLLO ATTUATORI (RACCORDI E NAMUR) IN AISI316L
COMANDO DIRETTO

AISI 316L
MONTAGGIO SU RACCORDI
UNIVERSALE

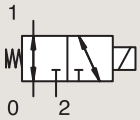

Raccordi	Orifizio Ø 1 mm	Fattore Portata Qn l/min	Pressione differenziale Min bar	Pressione differenziale Mass AC bar	Pressione differenziale Mass DC bar	Temp. Fluido Min °C	Temp. Fluido Mass °C	Tenuta	Valvola PARKER LUCIFER® Valvola	Valvola PARKER LUCIFER® Housing	Valvola PARKER LUCIFER® Bobina	Zona ATEX	Modo di Protezione	Potenza AC W	Potenza DC W	Gruppo Elettrico	Disegno nr.
1/4" NPTF	6	680	0	10	10	-25	65	NBR	**U133X51961D** [2]	-	**483270.02**	1-21	Ex db IIC T4 to T6	8	8	11.0	7038
	6	680	0	10	10	-25	65	NBR	**U133X7156** [1]	-	**496700**	1-21	Ex db mb IIC T4 to T6	6	6	9.0/10.1/10.2	8168
	6	680	0	-	10	-25	65	NBR	**U133X7196**	-	**492210**	1-21	Ex eb mb II T3 to T6	-	1.8	10.1/10.2	8169
	6	680	0	-	10	-25	65	NBR	**U133X7196**	-	**492965.01**	0-20	Ex ia IIC T6	-	0.3 to 3	9.0/10.1/10.2	8169
	6	680	0	10	10	-25	65	NBR	**U133X7196**	-	**496700**	1-21	Ex db mb IIC T4 to T6	6	6	9.0/10.1/10.2	8169

Nota:

1. Con comando manuale
2. Valvola consegnato con un certificato di tracciabilità dei materiali

In questa pagina	Raccordi	Orifizio (mm)	Qn (l/min)	Press. Diff. (bar)	Temp. Fluido (°C)	Temp. Amb. (°C)
da	1/4"	6	680	10	-25	-25
a	1/4"	6	680	10	65	65

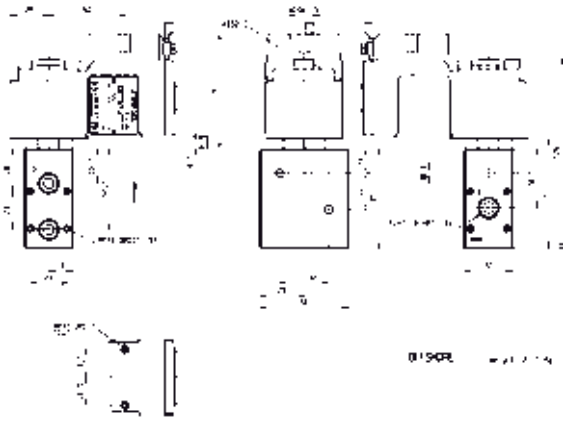

Disegno 7038

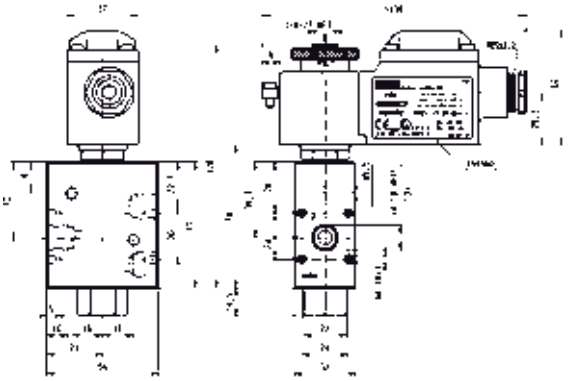

Disegno 8168

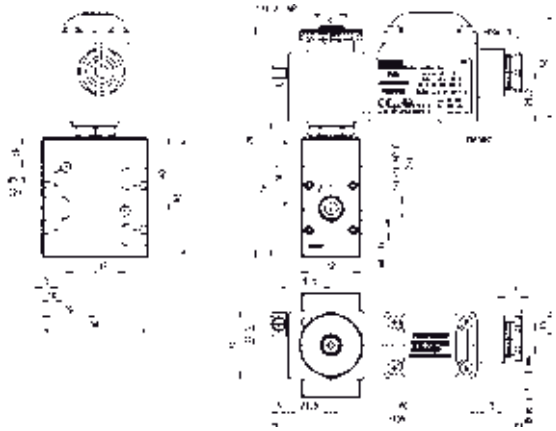

Disegno 8169

3/2

VALVOLE 3/2 E 5/2 PER CONTROLLO ATTUATORI (RACCORDI E NAMUR) IN AISI316L
COMANDO DIRETTO

AISI 316L
MONTAGGIO SU RACCORDI
UNIVERSALE

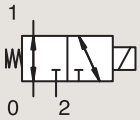

Raccordi	Orifizio Ø 1 mm	Fattore Portata Qn l/min	Pressione differenziale Min bar	Pressione differenziale Mass AC bar	Pressione differenziale Mass DC bar	Temp. Fluido Min °C	Temp. Fluido Mass °C	Tenuta	Valvola PARKER LUCIFER® Valvola	Valvola PARKER LUCIFER® Housing	Valvola PARKER LUCIFER® Bobina	Zona ATEX	Modo di Protezione	Potenza AC W	Potenza DC W	Gruppo Elettrico	Disegno nr.
3/8" NPTF	6	680	0	10	10	-25	65	NBR	**U133X5296**[1]	-	**492310**	1-21	Ex eb mb II T3 to T6	6	6	9.0/10.1/10.2	7669
	6	680	0	-	10	-25	65	NBR	**U133X5296**[1]	-	**492965.01**	0-20	Ex ia IIC T6	-	0.3 to 3	9.0/10.1/10.2	7669
	6	680	0	10	10	-25	65	NBR	**U133X5296**[1]	-	**496700**	1-21	Ex db mb IIC T4 to T6	6	6	9.0/10.1/10.2	7669
	6	680	0	10	10	-25	75	NBR	**U133X52961D**[1]	-	**483270.02**	1-21	Ex db IIC T4 to T6	8	8	11.0	7670

Nota:

1. Valvola consegnato con un certificato di tracciabilità dei materiali

In questa pagina	Raccordi	Orifizio (mm)	Qn (l/min)	Press. Diff. (bar)	Temp. Fluido (°C)	Temp. Amb. (°C)
da	3/8''	6	680	10	-25	-25
a	3/8''	6	680	10	75	65

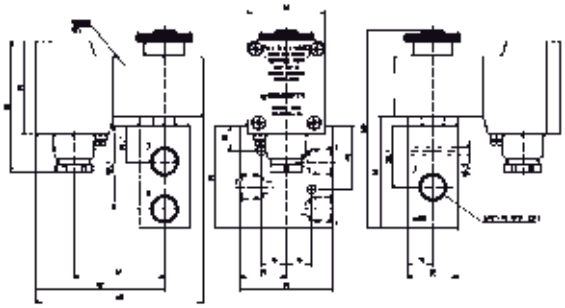

Disegno 7669

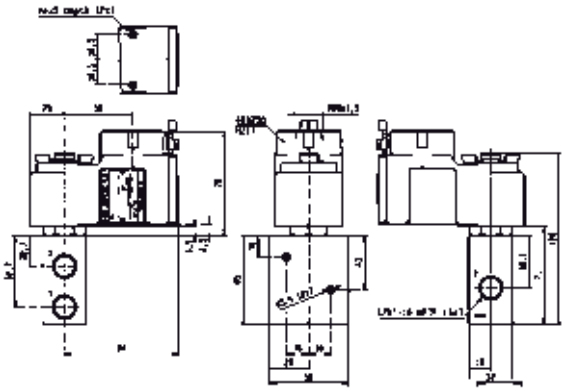

Disegno 7670

3/2 VALVOLE 3/2 E 5/2 PER CONTROLLO ATTUATORI (RACCORDI E NAMUR) IN AISI316L
COMANDO DIRETTO

AISI 316L
MONTAGGIO SOTTOBASE
NORMALMENTE CHIUSA

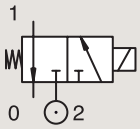

Raccordi	Orifizio Ø 1 mm	Fattore Portata Qn l/min	Pressione differenziale Min bar	Pressione differenziale Mass AC bar	Pressione differenziale Mass DC bar	Temp. Fluido Min °C	Temp. Fluido Mass °C	Tenuta	Valvola PARKER LUCIFER® Valvola	Valvola PARKER LUCIFER® Housing	Valvola PARKER LUCIFER® Bobina	Zona ATEX	Modo di Protezione	Potenza AC W	Potenza DC W	Gruppo Elettrico	Disegno nr.
SB	2.5	220	0	-	12	-25	65	FKM	U131F5695 [2]	-	492210	1-21	Ex eb mb II T3 to T6	-	1.8	9.0/10.1	3782
	2.5	220	0	-	12	-25	65	FKM	U131F5695 [2]	-	492965.01	0-20	Ex ia IIC T6	-	0.3 to 3	9.0/10.1	3782
	2.5	220	0	12	12	-25	75	FKM	U131F5695 [2]	-	496800	1-21	Ex db mb IIC T4	8	8	9.0/10.1	3782
	2.5	220	0	14	14	-10	80	FKM	U131F56951D [12]	-	483270.02	1-21	Ex db IIC T4 to T6	8	8	11.0	3783
SB	2.5	220	0	10	10	-25	75	FKM	U131F5295	-	496560	1-21	Ex db mb IIC T4	8	8	9.0/10.1	8174

Nota:

1. Valvole compatibili unicamente con olio idraulico e aria/gas neutri
2. Valvola consegnato con un certificato di tracciabilità dei materiali

AISI 316L
MONTAGGIO SOTTOBASE
UNIVERSALE

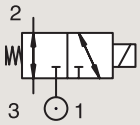

Raccordi	Orifizio Ø 1 mm	Fattore Portata Qn l/min	Pressione differenziale Min bar	Pressione differenziale Mass AC bar	Pressione differenziale Mass DC bar	Temp. Fluido Min °C	Temp. Fluido Mass °C	Tenuta	Valvola PARKER LUCIFER® Valvola	Valvola PARKER LUCIFER® Housing	Valvola PARKER LUCIFER® Bobina	Zona ATEX	Modo di Protezione	Potenza AC W	Potenza DC W	Gruppo Elettrico	Disegno nr.
1/4" NPTF	6	680	0	10	10	-25	65	FKM	U133X5195 [1]	-	492310	1-21	Ex eb mb II T3 to T6	6	6	9.0/10.1/10.2	3572
	6	680	0	10	10	-25	65	FKM	U133X5195 [1]	-	496700	1-21	Ex db mb IIC T4 to T6	6	6	9.0/10.1/10.2	3572

Nota:

1. Valvola consegnato con un certificato di tracciabilità dei materiali

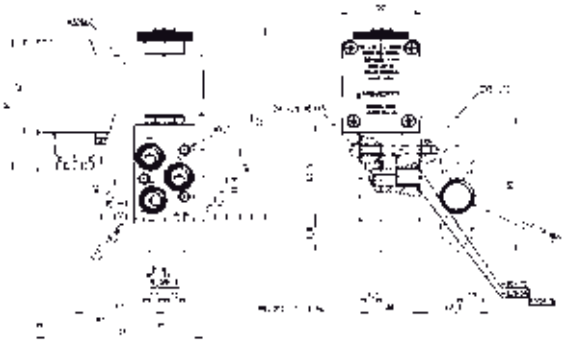

Disegno 3572

In questa pagina	Raccordi	Orifizio (mm)	Qn (l/min)	Press. Diff. (bar)	Temp. Fluido (°C)	Temp. Amb. (°C)
da	SB	2.5	220	10	-25	-25
a	SB	6	680	14	80	50

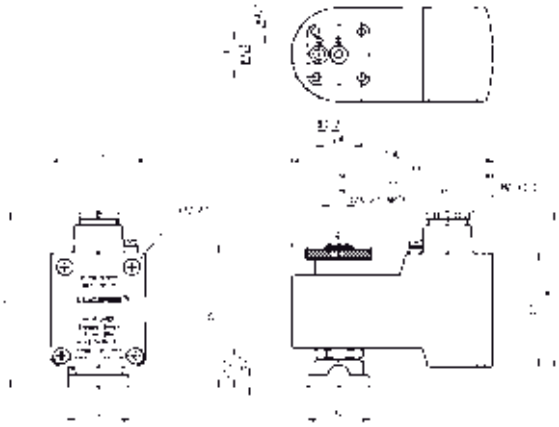

Disegno 3782

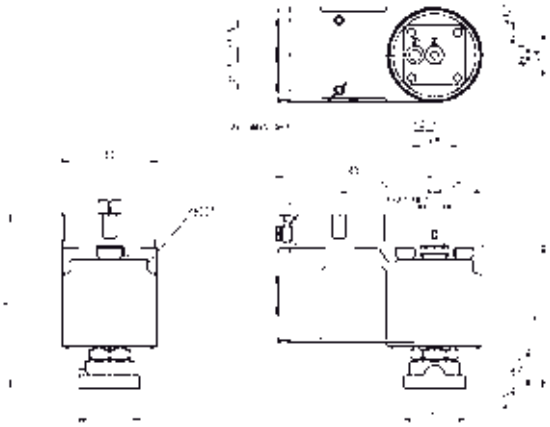

Disegno 3783

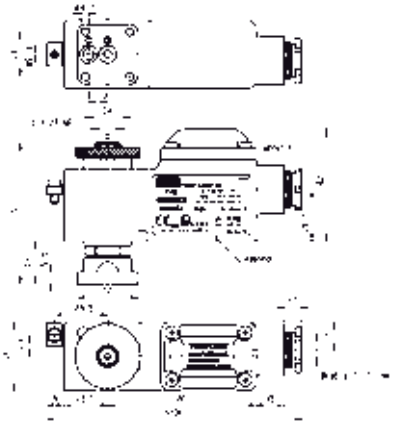

Disegno 8174

3/2 VALVOLE 3/2 E 5/2 PER CONTROLLO ATTUATORI (RACCORDI E NAMUR) IN AISI316L
COMANDO DIRETTO

AISI 316L
MONTAGGIO SOTTOBASE
UNIVERSALE

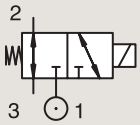

Raccordi	Orifizio Ø 1 mm	Fattore Portata Qn l/min	Pressione differenziale Min bar	Pressione differenziale Mass AC bar	Pressione differenziale Mass DC bar	Temp. Fluido Min °C	Temp. Fluido Mass °C	Tenuta	Valvola PARKER LUCIFER® Valvola	Valvola PARKER LUCIFER® Housing	Valvola PARKER LUCIFER® Bobina	Zona ATEX	Modo di Protezione	Potenza AC W	Potenza DC W	Gruppo Elettrico	Disegno nr.
1/4" NPTF	6	680	0	10	10	-25	65	FKM	U133X51951D [1]	-	483270	1-21	Ex db IIC T4 to T6	8	8	11.0	3688
	6	680	0	10	10	-25	65	FKM	U133X51951D [1]	-	483270.02	1-21	Ex db IIC T4 to T6	8	8	11.0	3688
	6	680	0	-	10	-25	65	FKM	U133X7195	-	492210	1-21	Ex eb mb II T3 to T6	-	1.8	9.0/10.1/10.2	8172
	6	680	0	-	10	-25	65	FKM	U133X7195	-	492965.01	0-20	Ex ia IIC T6	-	0.3 to 3	9.0/10.1/10.2	8172
	6	680	0	10	10	-25	65	FKM	U133X7195	-	496700	1-21	Ex db mb IIC T4 to T6	6	6	9.0/10.1/10.2	8172

Nota:

1. Valvola consegnato con un certificato di tracciabilità dei materiali

AISI 316L
NAMUR
NORMALMENTE CHIUSA

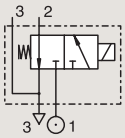

Raccordi	Orifizio Ø 1 mm	Fattore Portata Qn l/min	Pressione differenziale Min bar	Pressione differenziale Mass AC bar	Pressione differenziale Mass DC bar	Temp. Fluido Min °C	Temp. Fluido Mass °C	Tenuta	Valvola PARKER LUCIFER® Valvola	Valvola PARKER LUCIFER® Housing	Valvola PARKER LUCIFER® Bobina	Zona ATEX	Modo di Protezione	Potenza AC W	Potenza DC W	Gruppo Elettrico	Disegno nr.
3/8" NPT	6	680	0	10	10	-25	65	NBR	U131X1201 [1]	-	492310	1-21	Ex eb mb II T3 to T6	6	6	9.0/10.1/10.2	7668
	6	680	0	-	10	-25	75	NBR	U131X1201 [1]	-	492965.01	0-20	Ex ia IIC T6	-	0.3 to 3	9.0/10.1/10.2	7668
	6	680	0	10	10	-25	65	NBR	U131X1201 [1]	-	496700	1-21	Ex db mb IIC T4 to T6	6	6	9.0/10.1/10.2	7668

Nota:

1. Valvola consegnato con un certificato di tracciabilità dei materiali

In questa pagina	Raccordi	Orifizio (mm)	Qn (l/min)	Press. Diff. (bar)	Temp. Fluido (°C)	Temp. Amb. (°C)
da	1/4''	6	680	10	-25	-25
a	3/8''	6	680	10	75	65

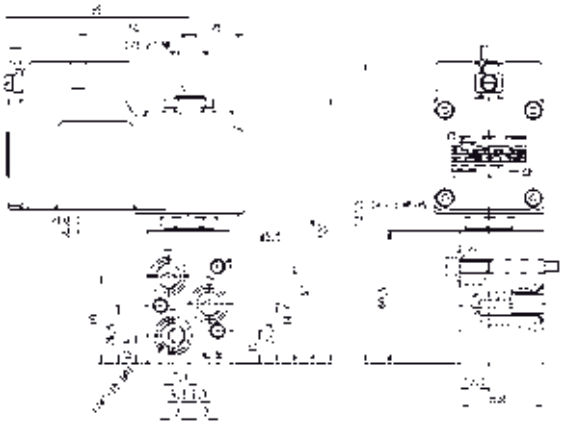

Disegno 3688

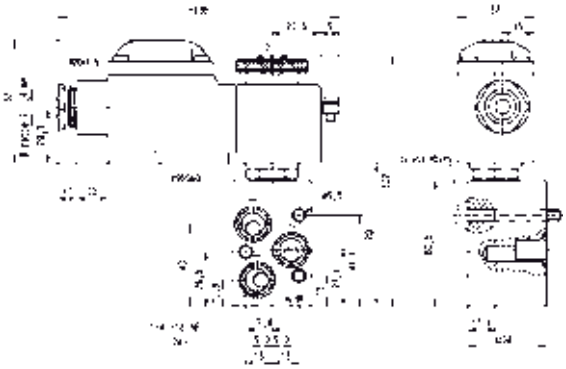

Disegno 8172

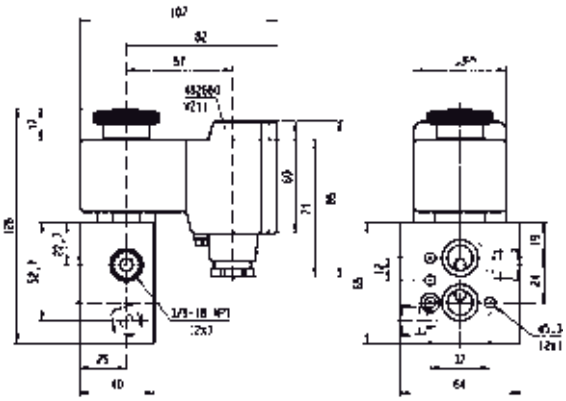

Disegno 7668

5/2 VALVOLE 3/2 E 5/2 PER CONTROLLO ATTUATORI (RACCORDI E NAMUR) IN AISI316L

SERVOPILOTATA

AISI 316L
MONTAGGIO SU RACCORDI
NORMALMENTE CHIUSA

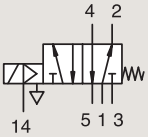

Raccordi	Orifizio Ø 1 mm	Fattore Portata Qn l/min	Pressione differenziale Min bar	Pressione differenziale Mass AC bar	Pressione differenziale Mass DC bar	Temp. Fluido Min °C	Temp. Fluido Mass °C	Tenuta	Valvola PARKER LUCIFER® Valvola	Valvola PARKER LUCIFER® Housing	Valvola PARKER LUCIFER® Bobina	Zona ATEX	Modo di Protezione	Potenza AC W	Potenza DC W	Gruppo Elettrico	Disegno nr.
3/8" NPT	8	1400	2	10	10	-25	80	NBR	U441P3250 12	4270	481000	-	-	8	8	2.1	7565
	8	1400	2	10	10	-25	80	NBR	U441P3250 12	2995	481865	-	-	8	9	2.1	7565

Nota:

1. Pilota con tenuta in FKM
2. Valvola con pressione di pilotaggio esterna minimo 4 bar

AISI 316L
MONTAGGIO SU RACCORDI
NORMALMENTE CHIUSA

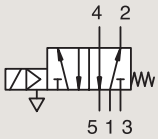

Raccordi	Orifizio Ø 1 mm	Fattore Portata Qn l/min	Pressione differenziale Min bar	Pressione differenziale Mass AC bar	Pressione differenziale Mass DC bar	Temp. Fluido Min °C	Temp. Fluido Mass °C	Tenuta	Valvola PARKER LUCIFER® Valvola	Valvola PARKER LUCIFER® Housing	Valvola PARKER LUCIFER® Bobina	Zona ATEX	Modo di Protezione	Potenza AC W	Potenza DC W	Gruppo Elettrico	Disegno nr.
1/4" 1/8" NPT	8	1400	2	10	10	-25	80	NBR	U341P0250 123	8993	481045	-	-	2	2.5	1.1	7578
	8	1400	2	10	10	-25	80	NBR	U341P0250 123	-	482606	1-21 Ex mb IIC T4/T5		2	2.5	1.1	7578
1/4" 3/8" NPT	8	1400	2	10	10	-25	80	NBR	U341P3250 3	4270	481000	-	-	8	8	2.1	7558
	8	1400	2	10	10	-25	80	NBR	U341P3250 3	2995	481865	-	-	8	9	2.1	7558
	8	1400	2	10	10	-25	80	NBR	U341P3250 3	2995	492453	-	-	8	9	2.1	7558

Nota:

1. Con comando manuale
2. Con scarico controllato
3. Pilota con tenuta in FKM

In questa pagina	Raccordi	Orifizio (mm)	Qn (l/min)	Press. Diff. (bar)	Temp. Fluido (°C)	Temp. Amb. (°C)
da	3/8''	8	1400	10	-25	-25
a	3/8''	8	1400	10	80	50

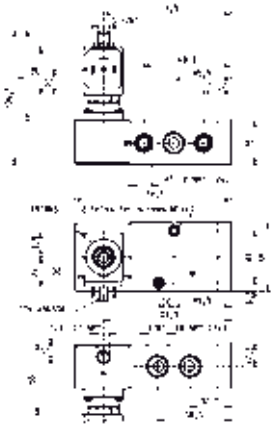

Disegno 7565

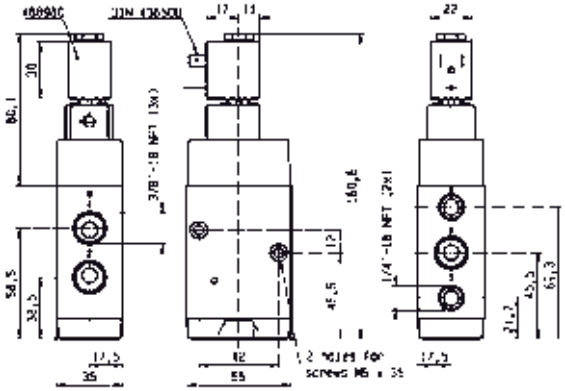

Disegno 7578

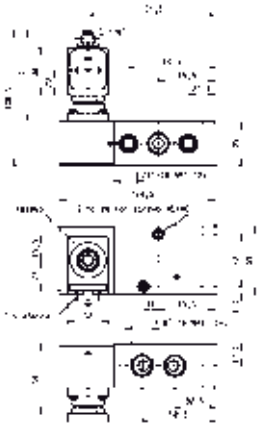

Disegno 7558

5/2 VALVOLE 3/2 E 5/2 PER CONTROLLO ATTUATORI (RACCORDI E NAMUR) IN AISI316L

SERVOPILOTATA

AISI 316L

MONTAGGIO SU RACCORDI

NORMALMENTE CHIUSA

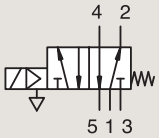

Raccordi	Orifizio Ø 1 mm	Fattore Portata Qn l/min	Pressione differenziale Min bar	Pressione differenziale Mass AC bar	Pressione differenziale Mass DC bar	Temp. Fluido Min °C	Temp. Fluido Mass °C	Tenuta	Valvola PARKER LUCIFER® Valvola	Valvola PARKER LUCIFER® Housing	Valvola PARKER LUCIFER® Bobina	Zona ATEX	Modo di Protezione	Potenza AC W	Potenza DC W	Gruppo Elettrico	Disegno nr.
3/8" NPT	8	1400	2	-	10	-25	55	NBR	**U341P3292** [1]	**2995**	**483580.01**	0-20	Ex ia IIC T6	-	0.5 to 3	7.0	7560
	8	1400	2	10	10	-25	75	NBR	**U341P3295** [1]	**-**	**492310**	1-21	Ex eb mb II T3 to T6	6	6	9.0/10.1	7561
	8	1400	2	-	10	-25	75	NBR	**U341P3295** [1]	**-**	**492965.01**	0-20	Ex ia IIC T6	-	0.3 to 3	9.0/10.1	7561

Nota:

1. Pilota con tenuta in FKM

In questa pagina	Raccordi	Orifizio (mm)	Qn (l/min)	Press. Diff. (bar)	Temp. Fluido (°C)	Temp. Amb. (°C)
da	3/8''	8	1400	10	-25	-25
a	3/8''	8	1400	10	75	50

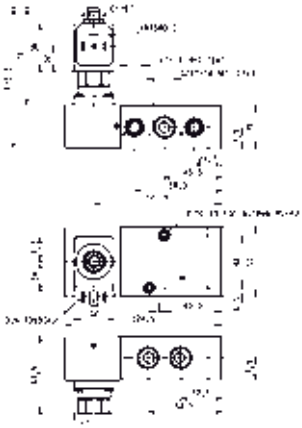

Disegno 7560

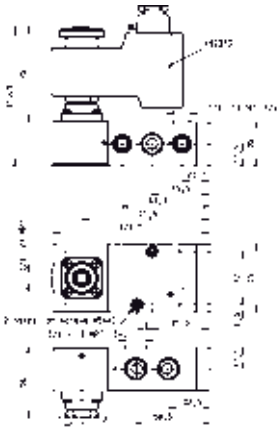

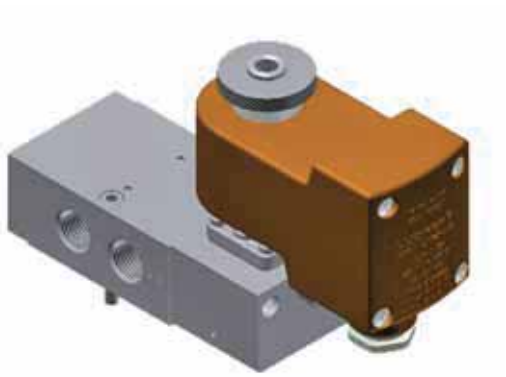

Disegno 7561

5/2 VALVOLE 3/2 E 5/2 PER CONTROLLO ATTUATORI (RACCORDI E NAMUR) IN AISI316L

SERVOPILOTATA

AISI 316L

MONTAGGIO SU RACCORDI

DOPPIO SOLENOIDE

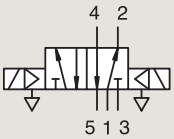

Raccordi	Orifizio Ø 1 mm	Fattore Portata Qn l/min	Pressione differenziale Min bar	Pressione differenziale Mass AC bar	Pressione differenziale Mass DC bar	Temp. Fluido Min °C	Temp. Fluido Mass °C	Tenuta	Valvola PARKER LUCIFER® Valvola	Valvola PARKER LUCIFER® Housing	Valvola PARKER LUCIFER® Bobina	Zona ATEX	Modo di Protezione	Potenza AC W	Potenza DC W	Gruppo Elettrico	Disegno nr.
3/8" NPT	8	1400	2	10	10	-25	80	NBR	U347P3250 [1]	4270	481000	-	-	8	8	2.1	7563
	8	1400	2	10	10	-25	80	NBR	U347P3250 [1]	-	483371	1-21		8	8	2.1	7563
	8	1400	2	10	10	-25	75	NBR	U347P3295 [1]	-	492310	1-21	Ex eb mb II T3 to T6	6	6	9.0/10.1	7564
	8	1400	2	10	10	-25	75	NBR	U347P3295 [1]	-	496800	1-21	Ex db mb IIC T4	8	8	9.0/10.1	7564

Nota:

1. Pilota con tenuta in FKM

In questa pagina	Raccordi	Orifizio (mm)	Qn (l/min)	Press. Diff. (bar)	Temp. Fluido (°C)	Temp. Amb. (°C)
da	3/8''	8	1400	10	-25	-25
a	3/8''	8	1400	10	80	50

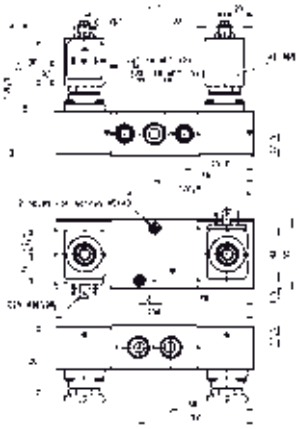

Disegno 7563

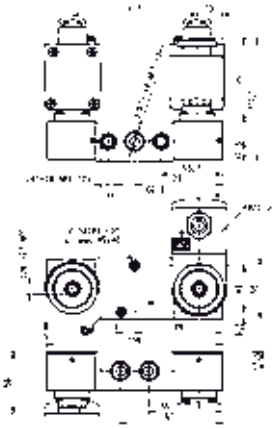

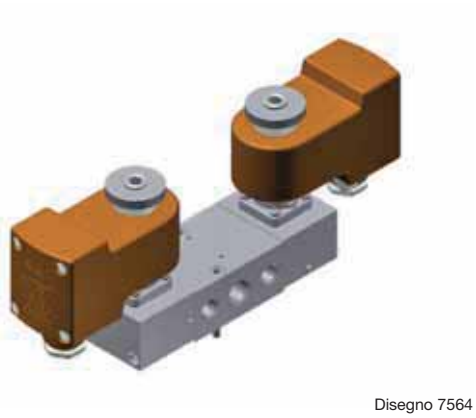

Disegno 7564

3/2-5/2 VALVOLE 3/2 E 5/2 PER CONTROLLO ATTUATORI (RACCORDI E NAMUR) IN AISI316L SERVOPILOTATA

AISI 316L

NAMUR

NORMALMENTE CHIUSA

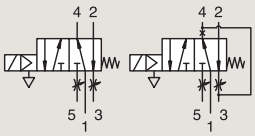

Raccordi	Orifizio Ø 1 mm	Fattore Portata Qn l/min	Pressione differenziale Min bar	Pressione differenziale Mass AC bar	Pressione differenziale Mass DC bar	Temp. Fluido Min °C	Temp. Fluido Mass °C	Tenuta	Valvola PARKER LUCIFER® Valvola	Valvola PARKER LUCIFER® Housing	Valvola PARKER LUCIFER® Bobina	Zona ATEX	Modo di Protezione	Potenza AC W	Potenza DC W	Gruppo Elettrico	Disegno nr.
3/8"-1/4" NPT	8	1400	2	10	10	-25	80	NBR	**U341N3250** [1]	**2995**	**481865**	-	-	8	9	2.1	7554
	8	1400	2	10	10	-25	80	NBR	**U341N3250** [1]	**-**	**492190**	1-21	Ex eb mb IIC T3/T4	11	9	2.1	7554
	8	1400	2	-	10	-25	55	NBR	**U341N3292** [1]	**2995**	**483580.01**	0-20	Ex ia IIC T6	-	0.5 to 3	7.0	7556
	8	1400	2	10	10	-25	75	NBR	**U341N3295** [1]	**-**	**492310**	1-21	Ex eb mb II T3 to T6	6	6	9.0/10.1	7696
	8	1400	2	10	10	-25	75	NBR	**U341N3295** [1]	**-**	**496800**	1-21	Ex db mb IIC T4	8	8	9.0/10.1	7696

Nota:

1. Pilota con tenuta in FKM

In questa pagina	Raccordi	Orifizio (mm)	Qn (l/min)	Press. Diff. (bar)	Temp. Fluido (°C)	Temp. Amb. (°C)
da	3/8''-1/4''	8	1400	10	-25	-25
a	3/8''-1/4''	8	1400	10	80	50

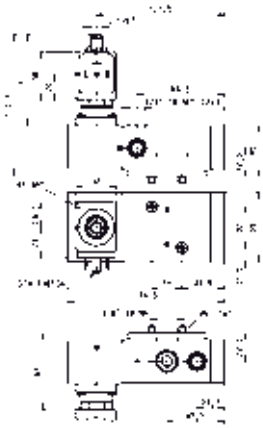

Disegno 7554

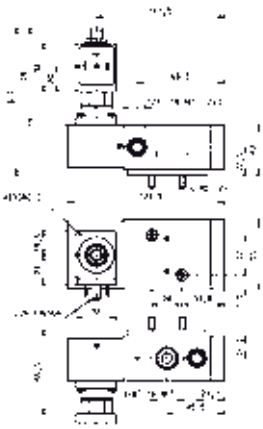

Disegno 7556

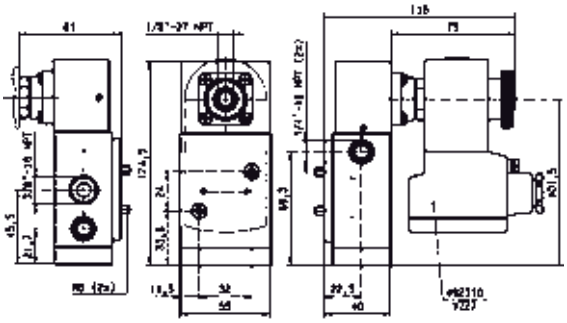

Disegno 7696

3/2-5/2

VALVOLE 3/2 E 5/2 PER CONTROLLO ATTUATORI (RACCORDI E NAMUR) IN AISI316L
SERVOPILOTATA

AISI 316L
NAMUR

ATTUAZIONE A SOLENOIDE - RITORNO A MOLLA

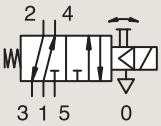

Raccordi	Orifizio Ø 1 mm	Fattore Portata Qn l/min	Pressione differenziale Min bar	Pressione differenziale Mass AC bar	Pressione differenziale Mass DC bar	Temp. Fluido Min °C	Temp. Fluido Mass °C	Tenuta	Valvola PARKER LUCIFER® Valvola	Valvola PARKER LUCIFER® Housing	Valvola PARKER LUCIFER® Bobina	Zona ATEX	Modo di Protezione	Potenza AC W	Potenza DC W	Gruppo Elettrico	Disegno nr.
3/8"-1/4"NPT	8	1400	2	10	10	-25	80	NBR	**U341N0250** [123]	**-**	**482606**	1-21	Ex mb IIC T4/T5	2	2.5	1.1	7577
	8	1400	2	10	10	-25	80	NBR	**U341N0250** [123]	**8993**	**488980**	-	-	2	2.5	1.1	7577

Nota:

1. Con comando manuale
2. Con scarico controllato
3. Pilota con tenuta in FKM

In questa pagina	Raccordi	Orifizio (mm)	Qn (l/min)	Press. Diff. (bar)	Temp. Fluido (°C)	Temp. Amb. (°C)
da	3/8''-1/4''	8	1400	10	-25	-25
a	3/8''-1/4''	8	1400	10	80	50

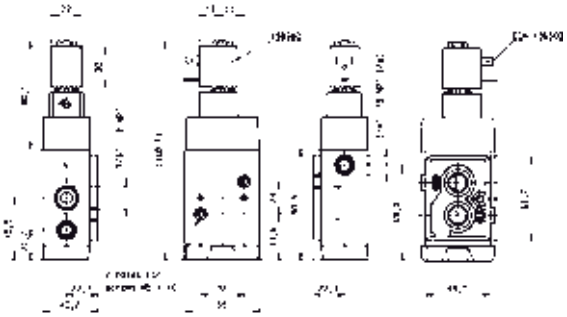

Disegno 7577

5/2

VALVOLE 3/2 E 5/2 PER CONTROLLO ATTUATORI (RACCORDI E NAMUR) IN AISI316L
SERVOPILOTATA

AISI 316L
NAMUR
DOPPIO SOLENOIDE

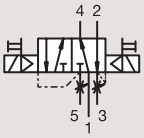

Raccordi	Orifizio Ø 1 mm	Fattore Portata Qn l/min	Pressione differenziale Min bar	Pressione differenziale Mass AC bar	Pressione differenziale Mass DC bar	Temp. Fluido Min °C	Temp. Fluido Mass °C	Tenuta	Valvola PARKER LUCIFER® Valvola	Valvola PARKER LUCIFER® Housing	Valvola PARKER LUCIFER® Bobina	Zona ATEX	Modo di Protezione	Potenza AC W	Potenza DC W	Gruppo Elettrico	Disegno nr.
3/8"-1/4"NPT	8	1400	2	10	10	-25	80	NBR	U347N3250 [1]	4270	481000	-	-	8	8	2.1	7557
	8	1400	2	10	10	-25	80	NBR	U347N3250 [1]	2995	481865	-	-	8	9	2.1	7557

Nota:

1. Pilota con tenuta in FKM

In questa pagina	Raccordi	Orifizio (mm)	Qn (l/min)	Press. Diff. (bar)	Temp. Fluido (°C)	Temp. Amb. (°C)
da	3/8''-1/4''	8	1400	10	-25	-25
a	3/8''-1/4''	8	1400	10	80	50

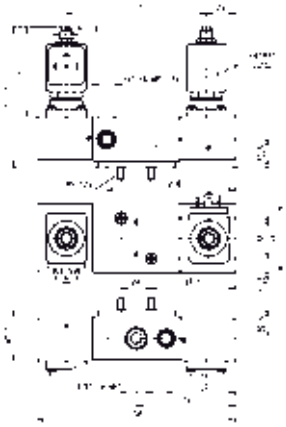

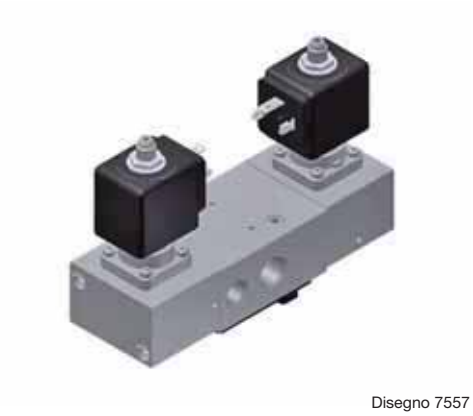

Disegno 7557

3/2

VALVOLE 3/2 E 5/2 PER CONTROLLO ATTUATORI (RACCORDI E NAMUR) IN AISI316L

RIARMO MANUALE

AISI 316L

MONTAGGIO SU RACCORDI

UNIVERSALE

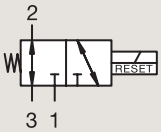

Raccordi	Orifizio Ø 1 mm	Fattore Portata Qn l/min	Pressione differenziale Min bar	Pressione differenziale Mass AC bar	Pressione differenziale Mass DC bar	Temp. Fluido Min °C	Temp. Fluido Mass °C	Tenuta	Valvola PARKER LUCIFER® Valvola	Valvola PARKER LUCIFER® Housing	Valvola PARKER LUCIFER® Bobina	Zona ATEX	Modo di Protezione	Potenza AC W	Potenza DC W	Gruppo Elettrico	Disegno nr.
1/4" NPTF	6	680	0	10	10	-25	65	NBR	**U033X5152** [12]	-	**492310**	1-21	Ex eb mb II T3 to T6	6	6	10.1/10.2	7029
	6	680	0	-	10	-25	65	NBR	**U033X5156** [2]	-	**482870.01**	0-20	Ex ia IIC T6	-	0.3 to 3	10.1/10.2/12.0	7771
	6	680	0	10	10	-25	65	NBR	**U033X5156** [2]	-	**492310**	1-21	Ex eb mb II T3 to T6	6	6	10.1/10.2/12.0	7771
	6	680	0	-	10	-25	65	NBR	**U033X5156** [2]	-	**492335**	0-20	NEMA 4-4X	-	0.3 to 3	10.1/10.2/12.0	7771
	6	680	0	10	10	-25	65	NBR	**U033X5156** [2]	-	**496700**	1-21	Ex db mb IIC T4 to T6	6	6	10.1/10.2/12.0	7771
	6	680	0	10	10	-25	75	NBR	**U033X51561D** [2]	-	**483270.02**	1-21	Ex db IIC T4 to T6	8	8	11.0	7030

Nota:

1. Utilizzo esclusivo in DC. Minima caduta di tensione 15% del voltaggio nominale (vecchia DIN19251)
2. Valvola consegnato con un certificato di tracciabilità dei materiali

In questa pagina	Raccordi	Orifizio (mm)	Qn (l/min)	Press. Diff. (bar)	Temp. Fluido (°C)	Temp. Amb. (°C)
da	1/4''	6	680	10	-25	-25
a	1/4''	6	680	10	75	65

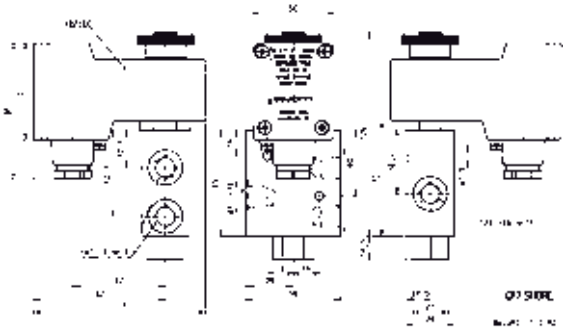

Disegno 7029

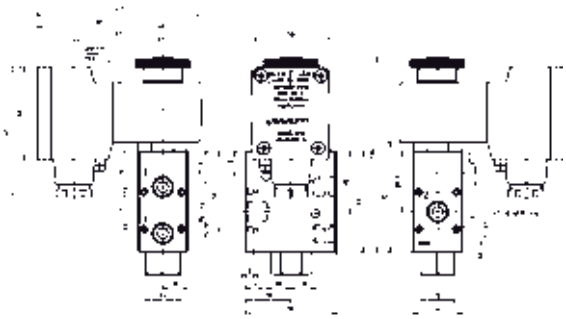

Disegno 7771

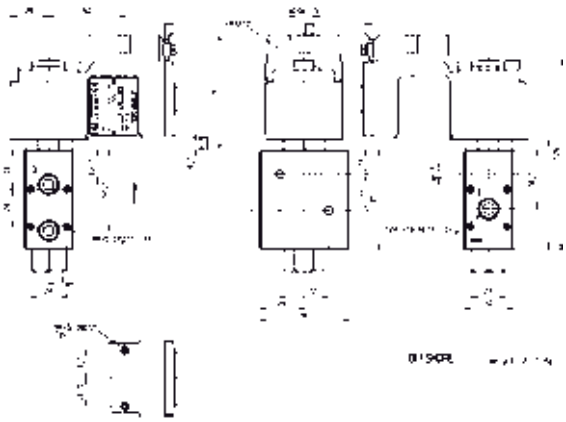

Disegno 7030

3/2

VALVOLE 3/2 E 5/2 PER CONTROLLO ATTUATORI (RACCORDI E NAMUR) IN AISI316L

RIARMO MANUALE

AISI 316L

MONTAGGIO SU RACCORDI

UNIVERSALE

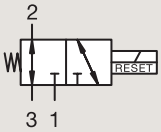

Raccordi	Orifizio Ø 1 mm	Fattore Portata Qn l/min	Pressione differenziale Min bar	Pressione differenziale Mass AC bar	Pressione differenziale Mass DC bar	Temp. Fluido Min °C	Temp. Fluido Mass °C	Tenuta	Valvola PARKER LUCIFER® Valvola	Valvola PARKER LUCIFER® Housing	Valvola PARKER LUCIFER® Bobina	Zona ATEX	Modo di Protezione	Potenza AC W	Potenza DC W	Gruppo Elettrico	Disegno nr.
1/4" NPTF	6	560	0	10	10	-25	65	NBR	**U033X5195** [2]	**-**	**492310**	1-21	Ex eb mb II T3 to T6	6	6	10.1/10.2/12.0	3594
	6	560	0	10	10	-25	65	NBR	**U033X5195** [2]	**-**	**496700**	1-21	Ex db mb IIC T4 to T6	6	6	10.1/10.2/12.0	3594
	6	680	0	10	10	-25	65	NBR	**U033X7156** [1]	**-**	**492310**	1-21	Ex eb mb II T3 to T6	6	6	10.1/10.2	8168
	6	680	0	10	10	-25	65	NBR	**U033X7156**	**-**	**496560**	1-21	Ex db mb IIC T4	8	8	10.1/10.2	8168
	6	680	0	10	10	-25	65	NBR	**U033X7156**	**-**	**496700**	1-21	Ex db mb IIC T4 to T6	6	6	10.1 10.2	8168
	6	680	0	10	10	-25	65	NBR	**U033X7156**	**-**	**496895**	-	-	8	8	10.1/10.2	8168

Nota:

1. Utilizzo esclusivo in DC. Minima caduta di tensione 15% del voltaggio nominale (vecchia DIN19251)
2. Valvola consegnato con un certificato di tracciabilità dei materiali

In questa pagina	Raccordi	Orifizio (mm)	Qn (l/min)	Press. Diff. (bar)	Temp. Fluido (°C)	Temp. Amb. (°C)
da	1/4''	6	560	10	-25	-25
a	1/4''	6	680	10	65	65

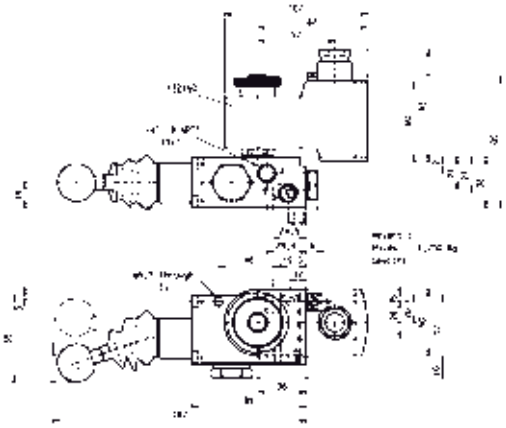

Disegno 3594

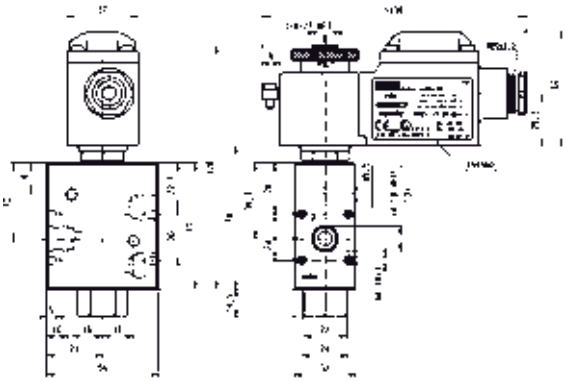

Disegno 8168

3/2

VALVOLE 3/2 E 5/2 PER CONTROLLO ATTUATORI (RACCORDI E NAMUR) IN AISI316L

RIARMO MANUALE

AISI 316L

MONTAGGIO SU RACCORDI

UNIVERSALE

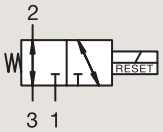

Raccordi	Orifizio Ø 1 mm	Fattore Portata Qn l/min	Pressione differenziale Min bar	Pressione differenziale Mass AC bar	Pressione differenziale Mass DC bar	Temp. Fluido Min °C	Temp. Fluido Mass °C	Tenuta	Valvola PARKER LUCIFER® Valvola	Valvola PARKER LUCIFER® Housing	Valvola PARKER LUCIFER® Bobina	Zona ATEX	Modo di Protezione	Potenza AC W	Potenza DC W	Gruppo Elettrico	Disegno nr.
3/8" NPTF	6	680	0	-	10	-25	65	NBR	**U033X5256**[1]	**-**	**482870.01**	0-20	Ex ia IIC T6	-	0.3 to 3	10.1/10.2/12.0	7671
	6	680	0	10	10	-25	65	NBR	**U033X5256**[1]	**-**	**492310**	1-21	Ex eb mb II T3 to T6	6	6	10.1/10.2/12.0	7671
	6	680	0	10	10	-25	65	NBR	**U033X5256**[1]	**-**	**496700**	1-21	Ex db mb IIC T4 to T6	6	6	10.1/10.2/12.0	7671
	6	680	0	10	10	-25	65	NBR	**U033X52561D**[1]	**-**	**483270**	1-21	Ex db IIC T4 to T6	8	8	11.0	7672
	6	680	0	10	10	-25	65	NBR	**U033X52561D**[1]	**-**	**483270.02**	1-21	Ex db IIC T4 to T6	8	8	11.0	7672

Nota:

1. Valvola consegnato con un certificato di tracciabilità dei materiali

In questa pagina	Raccordi	Orifizio (mm)	Qn (l/min)	Press. Diff. (bar)	Temp. Fluido (°C)	Temp. Amb. (°C)
da	1/4''	6	560	10	-25	-25
a	1/4''	6	680	10	65	65

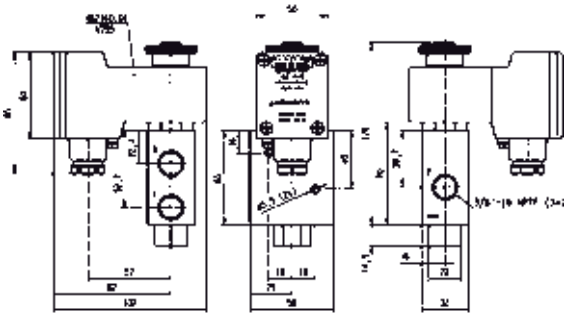

Disegno 7671

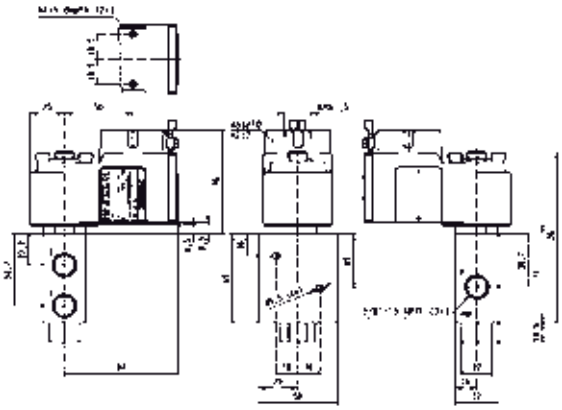

Disegno 7672

GAMMA DI REGOLATORI DI PRESSIONE PROPORZIONALI

aerospace
climate control
electromechanical
filtration
fluid & gas handling
hydraulics
pneumatics
process control
sealing & shielding

Basic	1/4" 1/2"
Comfort	1/4" 1/2"
Comfort	1/2" HP 1" 2"
Comfort ATEX	1/2" 1" 2"

Parker Hannifin Corporation
Fluid Control Division Europe
Catalogo generale FCDE/0110/IT/V2.0

GAMMA DI REGOLATORI DI PRESSIONE PROPORZIONALI

Regolatore di pressione programmabile Lucifer® EPP4

EPP4 è un regolatore di pressione elettropneumatico con sistema elettronico integrato.
Un'elettrovalvola con larghezza di impulso modulata controlla la pressione di uscita in modo proporzionale rispetto a un segnale di ingresso analogico.
Un segnale a circuito chiuso ad alta precisione generato da un sensore di pressione garantisce un'accuratezza molto elevata.

Mercato

Robotica
Industria della carta
Macchine utensili
Movimentazione
Edilizia
Tessile
Strumentazione
Semiconduttori

Descrizione delle applicazioni

Saldatura
Controllo della velocità e della frenatura
Sabbiatura
Taglio
Umidificazione
Regolazione della tensione
Verniciatura
Presse
Lucidatura
Controllo variabile delle sospensioni

Vantaggi della gamma di regolatori di pressione proporzionali Lucifer® EPP4

- Tutti i parametri sono regolabili tramite il software per PC Calys
- Software semplice da utilizzare
- Lunga durata
- Compatto e leggero
- Riduzione del valore di magazzino
- Bassa potenza
- Posizionamento flessibile del display remoto
- Comprovata competenza di Parker, azienda all'avanguardia nella tecnologia della regolazione di pressione

calys - Software per EPP Comfort

Calys è uno speciale software che abbiamo sviluppato per configurare tutti i parametri della linea EPP4 Comfort.
Il prodotto è un'opzione dell'EPP4. Per utilizzare CALYS occorre ordinare il cavo con il codice 496449 che permette la comunicazione tra l'EPP4 e un PC.

Calys offre molte funzioni:

- Permette ai distributori di ridurre le scorte tenendo a magazzino un EPP4 generico da adattare alle esigenze delle applicazioni specifiche. È possibile variare, ad esempio, da 0-10V a 4-20mA oppure da un range di pressione di 0-7 bar a 0-5 bar.
- Durante la progettazione di un impianto pneumatico il software permette di controllare con accuratezza tutti i valori principali (elettrici o pneumatici) direttamente da un computer portatile.
- I responsabili del reparto post-vendita possono ricevere tramite posta elettronica tutti i parametri misurati da un EPP4 installato su una macchina a prescindere dalla sua ubicazione, e possono quindi operare a distanza per gli interventi di manutenzione.
- Calys permette di mettere a punto i parametri di regolazione PID per adeguarli alla risposta desiderata del regolatore (lento o reattivo).

Per scaricare gratuitamente il software Calys fare clic su
www.parker.com/FCDE/Support

GAMMA DI REGOLATORI DI PRESSIONE PROPORZIONALI

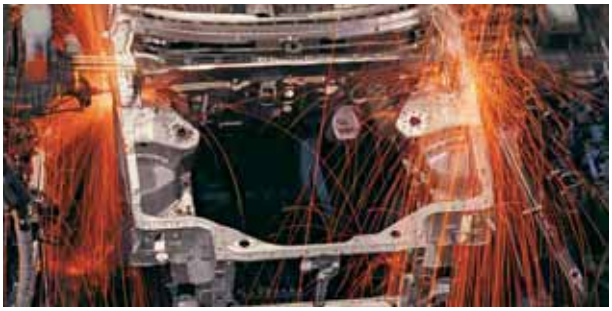

RIEPILOGO

EPP Introduzione ..... pagina 412

Gamma EPP4 Basic ..... pagina 414

Gamma EPP4 Comfort ..... pagina 418

Gamma EPP4 Comfort HP ..... pagina 422

Gamma EPP4 Comfort ATEX ..... pagina 428

Accessori ..... pagina 434

INTRODUZIONE

Funzionamento

La serie EPP4 è una gamma di regolatori di pressione elettropneumatici comandati a distanza

con controllo elettronico integrato a circuito chiuso.

La serie EPP4 consente di regolare la pressione in uscita in modo proporzionale rispetto a un segnale di comando elettrico.

Il regolatore EPP4 è costituito da un tradizionale regolatore di pressione pneumatico servo azionato, in cui la camera pilota è alimentata da una delle due elettrovalvole a 2 vie con larghezza di impulso modulata.

Il sensore di pressione misura la pressione in uscita del regolatore e fornisce un segnale di feedback al controller.

La differenza tra il segnale di controllo e il segnale di feedback è convertita in un segnale digitale per attivare la bobina di una delle due valvole a 2 vie per correggere la posizione del regolatore.

Il segnale di controllo può essere di tensione (0-10 V) o di corrente (4-20 mA). L'ingresso della **"valvola di riempimento"** è collegato direttamente all'ingresso principale P del regolatore; una volta attivata, la valvola riempie la camera servo azionata per aumentare la pressione sull'uscita A del regolatore.

Quando si attiva la "valvola di scarico" (riduzione della pressione sull'uscita A del regolatore), la pressione della camera servo azionata viene scaricata tramite un foro situato tra il coperchio e il corpo e rilasciata direttamente nell'atmosfera senza silenziatore.

Lo scarico della pressione regolata principale avviene tramite lo scarico rapido R. Si raccomanda l'impiego di un silenziatore convenzionale.

Entrambe le elettrovalvole garantiscono il **riempimento** o **lo svuotamento** della camera servo azionata per aumentare o diminuire la pressione in uscita del regolatore.

Quando le valvole sono in posizione di riposo tutte le porte sono bloccate.

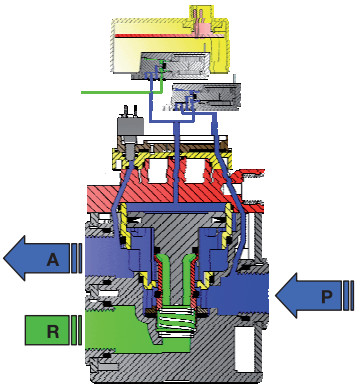

Posizione di riempimento

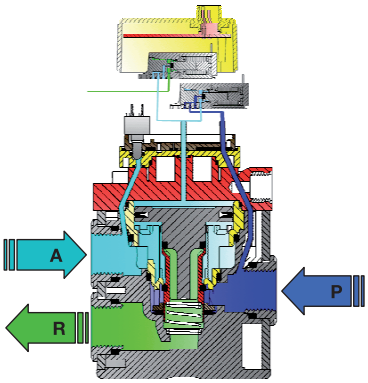

Posizione standby

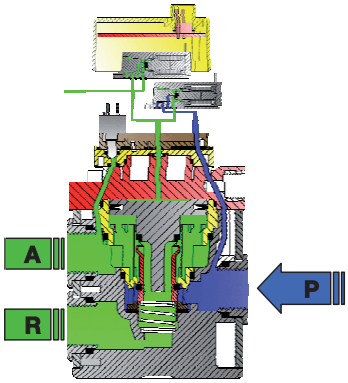

Posizione di svuotamento

Diagramma del blocco

Il controller riceve sia il segnale di controllo (impostazione della pressione) che il segnale di feedback dal sensore (pressione in uscita).

Ogni differenza tra i due ingressi dell'amplificatore si tramuta in un segnale di output corrispondente che attiva un'elettrovalvola 2 vie PWM affinché il pistone di pilotaggio si muova per correggere la pressione.

Il segnale di feedback dal sensore viene utilizzato anche per il feedback dell'uscita in tensione e corrente. Il segnale digitale (allarme) si attiva quando sono soddisfatte le condizioni previste (fuori pressione o tempo utile).

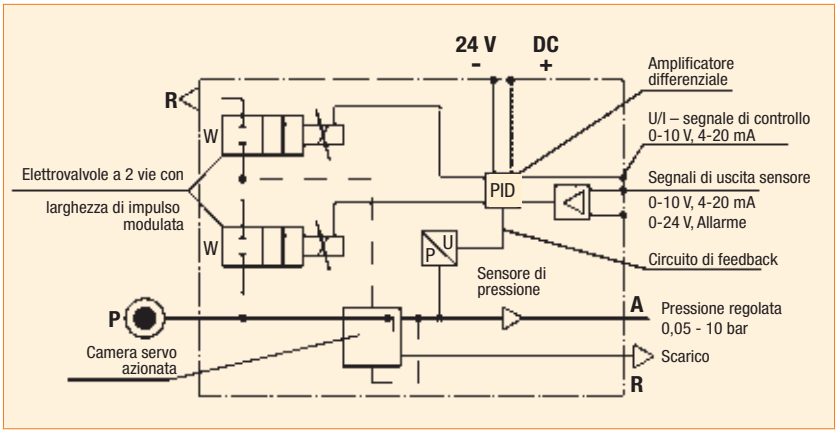

Versioni disponibili dell'EPP4: Basic e Comfort

Le gamme EPP4 Basic e Comfort hanno gli stessi componenti meccanici, particolarmente affidabili. Anche la regolazione proporzionale è identica nelle due versioni, che hanno le stesse caratteristiche di isteresi e precisione.

I regolatori della gamma Comfort dispongono di un secondo connettore M12 che può essere utilizzato per collegare un display remoto per la visualizzazione della pressione regolata o un PC per impostare agevolmente i parametri di regolazione.

Queste opzioni chiave assicurano la massima comodità di utilizzo.

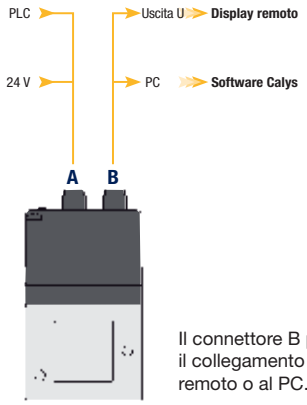

Il connettore B permette il collegamento al display remoto o al PC.

LUCIFER® EPP4 BASIC 1/4" & 1/2"

Basic	1/4" 1/2"
Comfort	1/4" 1/2"
Comfort	1/2" HP 1" 2"
Comfort ATEX	1/2" 1" 2"

DATI TECNICI

	Basic 1/4"	Basic 1/2"
Fluidi:	Aria lubrificata o non lubrificata e gas neutri. Filtrazione raccomandata: 50 µm	
Intervallo di temperatura:	**Ambiente: da 0°C a +50°C** Fluido: da **0°C a +50°C**	
Pressione in ingresso: La pressione in ingresso deve sempre essere superiore di almeno 1 bar rispetto alla pressione regolata.	1 - 12 bar	1 - 12 bar
Pressione in uscita:	0,05 - 10 bar	
Isteresi:	± 50 mbar (configurazione di fabbrica)	
Consumo d'aria con segnale di controllo costante:	0	
Tensione di alimentazione:	24 V DC ± 15% (oscillazione max. 1 V)	
Potenza assorbita:	Max. 2,8 W a 24 V DC con variazioni costanti del segnale di controllo < 1,5 W senza variazioni del segnale di controllo	
Segnale di controllo:	Analogico 0 - 10 V Analogico 4 - 20 mA	
Portata massima: Tempo di risposta indicativo: Con un volume di 330 cm³ all'uscita del regolatore	70 m³/h	150 m³/h
Riempimento 2 - 4 bar: **Riempimento 2 - 8 bar:** **Svuotamento 4 - 2 bar:** **Svuotamento 8 - 2 bar:**	50 msec 100 msec 70 msec 130 msec	60 msec 120 msec 90 msec 190 msec
Posizione di sicurezza:	In caso di errore nel segnale di controllo o se il segnale è inferiore a 50 mV, la pressione regolata scende automaticamente a 0 bar (pressione atmosferica). In caso di interruzione dell'alimentazione, la pressione regolata viene mantenuta costante.	
Collegamento elettrico:	M12 - 4 pin ; 4 x 0,34 mm²	
Durata prevista:	> 50 milioni di variazioni del segnale di controllo	
Posizione di montaggio:	Indifferente (posizione raccomandata: verticale, parte elettronica in alto)	
Resistenza alle vibrazioni:	30 g in tutte le direzioni	
Grado di protezione:	IP 65	
Assemblaggio:	Senza silicone	
Compatibilità elettromagnetica: **In conformità con:**	EN 61000-6-1: 2001 EN 61000-6-2: 2001 EN 61000-6-3: 2001 EN 61000-6-4: 2001	
Istruzioni per l'installazione e la configurazione:	Vedere i bollettini 408038, 408014 e l'appendice forniti con il prodotto.	

Nota: Parker si riserva il diritto di modificare le specifiche senza preavviso.

LUCIFER® EPP4 BASIC 1/4" & 1/2"

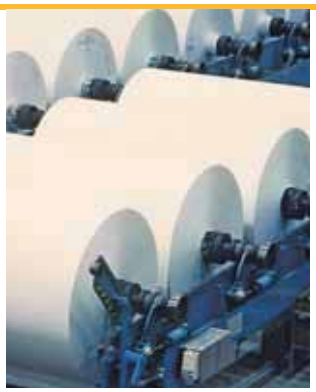

GRAFICI DELLE PORTATE

Portata Basic 1/4"

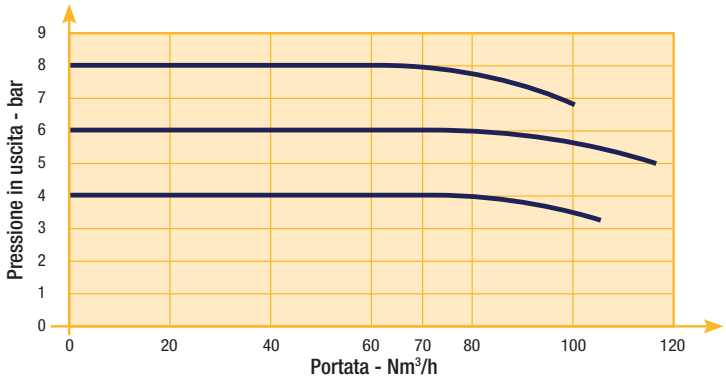

Portata Basic 1/2"

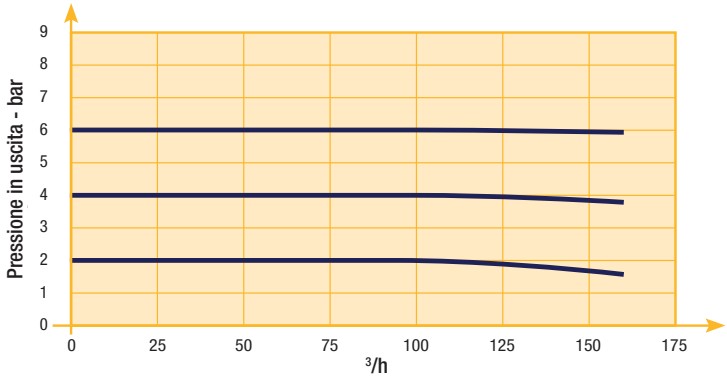

LUCIFER® EPP4 BASIC 1/4" & 1/2"

RIFERIMENTI

Codice	Tubo	Intervallo di pressione (bar)		Segnale di controllo (vedere opzioni)	Schema d'ingombro
P4BG2001A001	G 1/4"	0	4 bar	4 - 20 mA	1
P4BG2001A002	G 1/4"	0	10 bar	0 - 10 V	1
P4BG2001A003	G 1/4"	0	10 bar	4 - 20 mA	1
P4BG2001A004	G 1/4"	0	6 bar	0 - 10 V	1
P4BG2001A005	G 1/4"	0	6 bar	4 - 20 mA	1
P4BG2001A006	G 1/4"	0	5 bar	0 - 10 V	1
P4BG2001A007	G 1/4"	0	5 bar	4 - 20 mA	1
P4BG2001A008	G 1/4"	0	7 bar	0 - 10 V	1
P4BG2001A009	G 1/4"	0	7 bar	4 - 20 mA	1
P4BG2003A002 *	G 1/4"	0	10 bar	0 - 10 V	1
P4BG2003A003 *	G 1/4"	0	10 bar	4 - 20 mA	1
P4BG4001A002	G 1/2"	0	10 bar	0 - 10 V	2
P4BG4001A003	G 1/2"	0	10 bar	4 - 20 mA	2
P4BG4001A004	G 1/2"	0	6 bar	0 - 10 V	2
P4BG4001A005	G 1/2"	0	6 bar	4 - 20 mA	2
P4BG4001A006	G 1/2"	0	5 bar	0 - 10 V	2
P4BG4001A007	G 1/2"	0	5 bar	4 - 20 mA	2
P4BG4001A008	G 1/2"	0	7 bar	0 - 10 V	2
P4BG4001A009	G 1/2"	0	7 bar	4 - 20 mA	2
P4BG4004A010 ***	G 1/2"	0	4 bar	0 - 10 V	2
P4BG4051A002 **	G 1/2"	0	10 bar	4 - 20 mA	2
P4BN2001A002	NPT 1/4"	0	10 bar	0 - 10 V	2
P4BN2001A003	NPT 1/4"	0	10 bar	4 - 20 mA	2
P4BN4001A002	NPT 1/2"	0	10 bar	0 - 10 V	2
P4BN4001A003	NPT 1/2"	0	10 bar	4 - 20 mA	2

* Scarico integrato per la valvola di pilotaggio
** O2
*** Alimentazione di pressione esterna

LUCIFER® EPP4 BASIC 1/4" & 1/2"

SCHEMI D'INGOMBRO EPP4 BASIC 1/4"

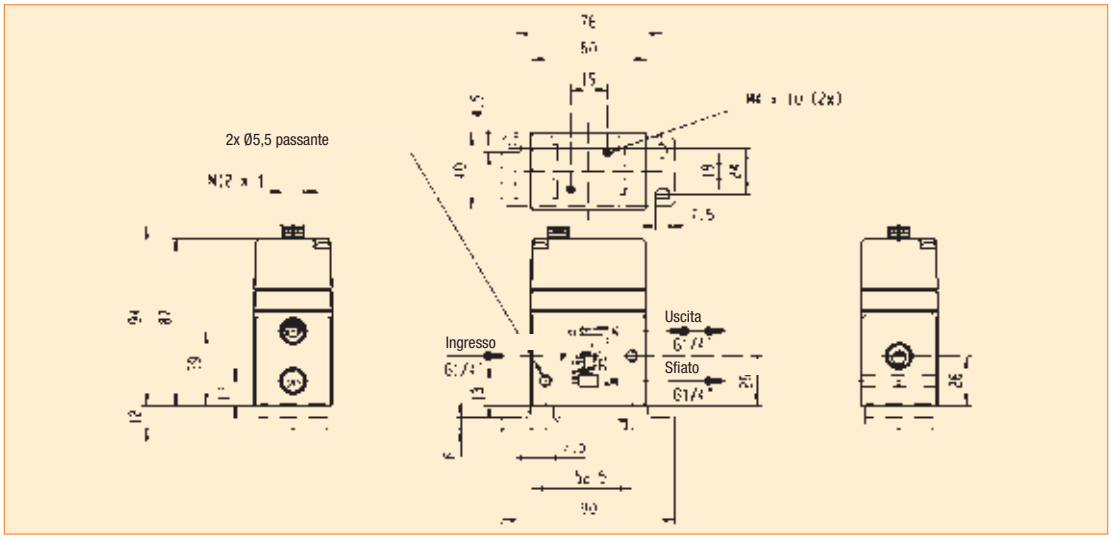

Schema 1

SCHEMI D'INGOMBRO EPP4 BASIC 1/2"

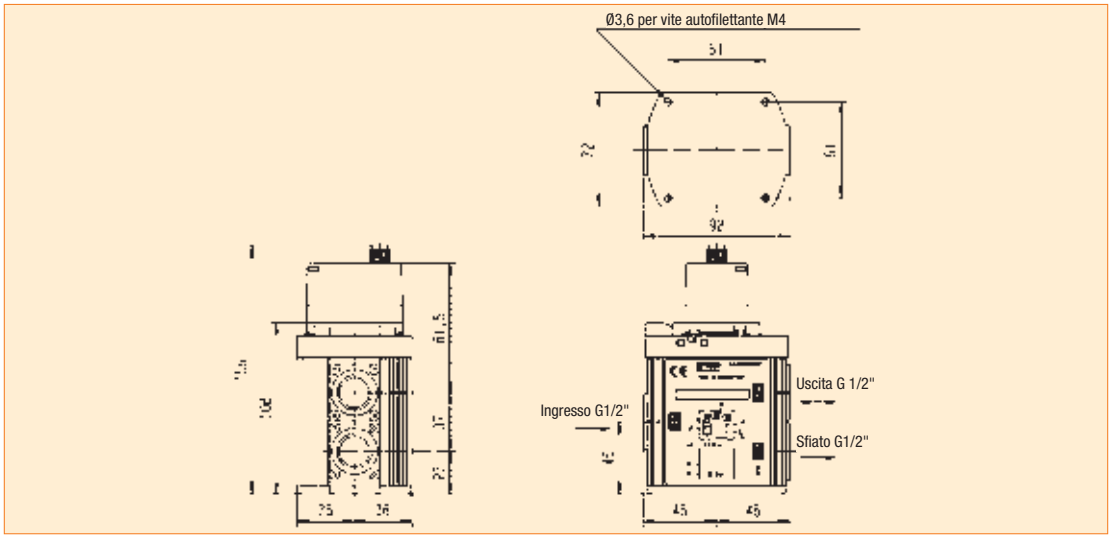

Schema 2

LUCIFER® EPP4 COMFORT 1/4" & 1/2"

Basic	1/4" 1/2"
Comfort	1/4" 1/2"
Comfort	1/2" HP 1" 2"
Comfort ATEX	1/2" 1" 2"

DATI TECNICI

	Comfort 1/4"	Comfort 1/2"
Fluidi:	Aria lubrificata o non lubrificata e gas neutri. Filtrazione raccomandata: 50 µm	
Intervallo di temperatura:	**Ambiente: da 0°C a +50°C** Fluido: da **0°C a +50°C**	
Pressione in ingresso: La pressione in ingresso deve sempre essere superiore di almeno 1 bar rispetto alla pressione regolata.	1 - 12 bar	1 - 12 bar
Pressione in uscita:	0,05 - 10 bar	
Isteresi:	± 50 mbar (configurazione di fabbrica)	
Consumo d'aria con segnale di controllo costante:	0	
Tensione di alimentazione:	24 V DC ± 15% (oscillazione max. 1 V)	
Potenza assorbita:	Max. 2,8 W a 24 V DC con variazioni costanti del segnale di controllo < 1,5 W senza variazioni del segnale di controllo	
Segnale di controllo:	Analogico 0 - 10 V Analogico 4 - 20 mA	
Segnale del sensore in uscita:	Analogico 0 - 10 V Standard per 0 - 10 bar ; regolabile Analogico 4 - 20 mA Standard per 0 - 10 bar ; regolabile	Digitale 0/24 V per le funzioni di allarme: Errore pressione regolabile (+/-) Attivazione ritardo regolabile Disattivazione ritardo regolabile Logica regolabile (+/-)
Portata massima:	70 m³/h	150 m³/h
Tempo di risposta indicativo:	Con un volume di 330 cm³ all'uscita del regolatore	
Riempimento 2 - 4 bar:	50 msec	60 msec
Riempimento 2 - 8 bar:	100 msec	120 msec
Svuotamento 4 - 2 bar:	70 msec	90 msec
Svuotamento 8 - 2 bar:	130 msec	190 msec
Posizione di sicurezza:	In caso di errore nel segnale di controllo o se il segnale è inferiore a 50 mV, la pressione regolata scende automaticamente a 0 bar (pressione atmosferica). In caso di interruzione dell'alimentazione, la pressione regolata viene mantenuta costante.	
Collegamento elettrico:	M12 - 8 pin; connettore maschio alimentazione/segnale di controllo M12 - 5 pin; connettore maschio comunicazione	
Durata prevista:	> 50 milioni di variazioni del segnale di controllo	
Posizione di montaggio:	Indifferente (posizione raccomandata: verticale, parte elettronica in alto)	
Resistenza alle vibrazioni:	30 g in tutte le direzioni	
Grado di protezione:	IP 65	
Assemblaggio:	Senza silicone	
Compatibilità elettromagnetica: **In conformità con:**	EN 61000-6-1: 2001 EN 61000-6-2: 2001 EN 61000-6-3: 2001 + A11 2004 edizione (01/07/07) EN 61000-6-4: 2001	
Istruzioni per l'installazione e la configurazione:	Vedere i bollettini 408128, 408134 e l'appendice forniti con il prodotto.	

Nota: Parker si riserva il diritto di modificare le specifiche senza preavviso.

LUCIFER® EPP4 COMFORT 1/4" & 1/2"

GRAFICI DELLE PORTATE

Portata 1/4"

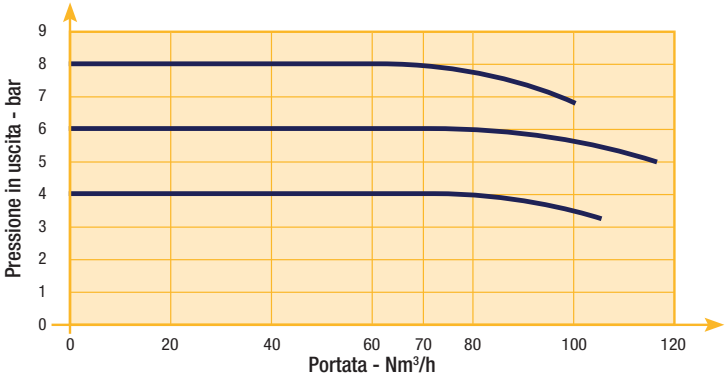

Portata 1/2"

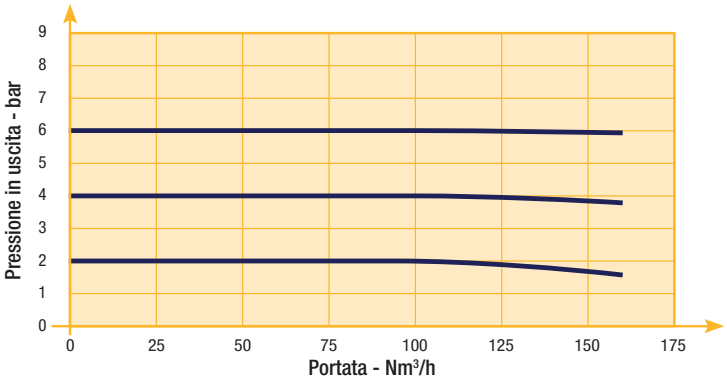

LUCIFER® EPP4 COMFORT1/4" & 1/2"

RIFERIMENTI

Codice	Tubo	Intervallo di pressione (bar)		Segnale di controllo (vedere opzioni)	Visualizzazione	Schema d'ingombro
P4CG2001C001	G 1/4	0	10	0-10 V	-	3
P4CG2001C002	G 1/4	0	10	4-20 mA	-	3
P4CG2001C005	G 1/4	0	7	0-10 V	-	3
P4CG2001C006	G 1/4	0	7	4-20 mA	-	3
P4CG2002C001	G 1/4	0	10	0-10 V	incluso	3
P4CG2002C002	G 1/4	0	10	4-20 mA	incluso	3
P4CG2003C001 *	G 1/4	0	10	0-10 V	-	3
P4CG2003C002 *	G 1/4	0	10	4-20 mA	-	3
P4CG2002C007	G 1/4	0	7	0-10 V	-	3
P4CG2002C008	G 1/4	0	7	4-20 mA	-	3
P4CN2001C001	1/4 NPT	0	10	0-10 V	-	3
P4CN2001C002	1/4 NPT	0	10	4-20 mA	-	3
P4CN2002C001	1/4 NPT	0	10	0-10 V	incluso	3
P4CN2002C002	1/4 NPT	0	10	4-20 mA	incluso	3
P4CG4001C001	G 1/2	0	10	0-10 V	-	4
P4CG4001C002	G 1/2	0	10	4-20 mA	-	4
P4CG4001C005	G 1/2	0	7	0-10 V	-	4
P4CG4001C006	G 1/2	0	7	4-20 mA	-	4
P4CG4002C001	G 1/2	0	10	0-10 V	incluso	4
P4CG4002C002	G 1/2	0	10	4-20 mA	incluso	4
P4CG4002C005	G 1/2	0	7	0-10 V	-	4
P4CG4002C006	G 1/2	0	7	4-20 mA	-	4
P4CG4051C001 **	G 1/2	0	10	0-10 V	-	4
P4CG4051C002 **	G 1/2	0	10	4-20 mA	-	4
P4CN4001C001	1/2 NPT	0	10	0-10 V	-	4
P4CN4001C002	1/2 NPT	0	10	4-20 mA	-	4
P4CN4002C001	1/2 NPT	0	10	0-10 V	incluso	4
P4CN4002C002	1/2 NPT	0	10	4-20 mA	incluso	4

* Scarico integrato per la valvola di pilotaggio
** O2

LUCIFER® EPP4 COMFORT 1/4" & 1/2"

SCHEMI D'INGOMBRO EPP4 COMFORT 1/4"

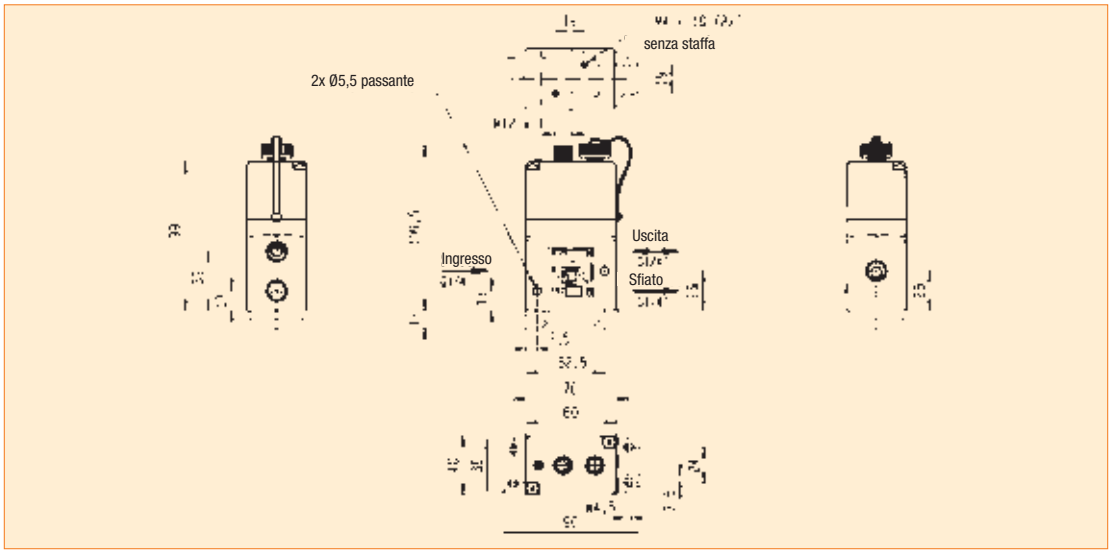

Schema 3

SCHEMI D'INGOMBRO EPP4 COMFORT 1/2"

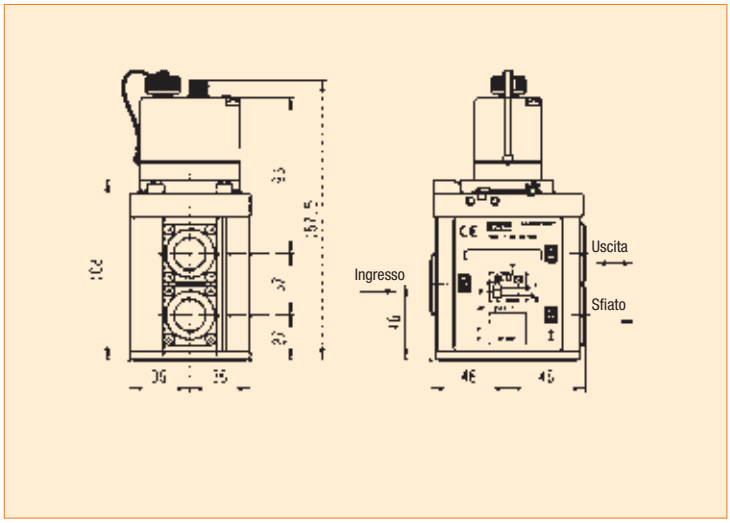

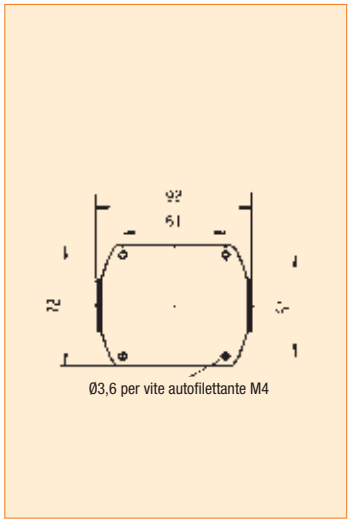

Schema 4

LUCIFER® EPP4 COMFORT 1/2"HP, 1" & 2"

Basic	1/4" 1/2"
Comfort	1/4" 1/2"
Comfort	**1/2" HP 1" 2"**
Comfort ATEX	1/2" 1" 2"

DATI TECNICI

	Comfort 1/2" HP	Comfort 1"	Comfort 2"
Fluidi:	Aria lubrificata o non lubrificata e gas neutri. Filtrazione raccomandata: 50 µm		
Intervallo di temperatura:	**Ambiente: da 0°C a +50°C** Fluido: da **0°C a +50°C**		
Intervallo pressione in ingresso: La pressione in ingresso deve sempre essere superiore di almeno 1 bar rispetto alla pressione regolata.	1 - 21 bar	1 - 21 bar	1 - 12 bar
Intervallo pressione in uscita:	0,05 - 20 bar	0,05 - 20 bar	0,05 - 10 bar
Isteresi:	≤ 100 mbar se l'ingresso P ≤ 10 bar ≤ 200 mbar se l'ingresso P > 10 bar		
Consumo d'aria con segnale di controllo costante:	0		
Tensione di alimentazione:	**24V DC** ± 15%		
Potenza assorbita:	Max. 6 W a 24 V DC con variazioni costanti del segnale di controllo < 2 W senza variazioni del segnale di controllo		
Segnale di controllo:	Analogico 0 - 10 V Analogico 4 - 20 mA		
Segnale del sensore in uscita:	Analogico 0 - 10 V Standard per 0 - 10 bar ; regolabile Analogico 4 - 20 mA Standard per 0 - 10 bar ; regolabile Digitale 0/24 V per le funzioni di allarme: Errore pressione regolabile (+/-) Attivazione ritardo regolabile Disattivazione ritardo regolabile Logica regolabile (+/-)		
Portata massima:	150 m³/h	1 000 m³/h	2 700 m³/h
Tempo di risposta indicativo:	Con un volume di 330 cm³ all'uscita del regolatore		
Riempimento 2 - 8 bar:	120 msec	250 msec	250 msec
Svuotamento 8 - 2 bar:	190 msec	400 msec	400 msec
Posizione di sicurezza:	In caso di errore nel segnale di controllo o se il segnale è inferiore a 50 mV, la pressione regolata scende automaticamente a 0 bar (per pressioni di 0-10 bar, 100 mV per pressioni superiori a 10 bar). In caso di interruzione dell'alimentazione, la pressione regolata viene mantenuta costante.		
Collegamento elettrico:	M12 - 8 pin; connettore maschio alimentazione/segnale di controllo M12 - 5 pin; connettore maschio comunicazione		
Durata prevista:	> 20 milioni di variazioni del segnale di controllo		
Posizione di montaggio:	Indifferente (posizione raccomandata: verticale, parte elettronica in alto)		
Resistenza alle vibrazioni:	30 g in tutte le direzioni		
Grado di protezione:	IP 65		
Assemblaggio:	Senza silicone		
Compatibilità elettromagnetica: **In conformità con:**	EN 61000-6-1: 2001 EN 61000-6-2: 2001 EN 61000-6-3: 2001 + A11 2004 edizione (01/07/07) EN 61000-6-4: 2001		
Istruzioni per l'installazione e la configurazione:	Vedere il bollettino 408 193 e l'appendice forniti con il prodotto.		

Nota: Parker si riserva il diritto di modificare le specifiche senza preavviso.

LUCIFER® EPP4 COMFORT 1/2"HP, 1" & 2"

GRAFICI DELLE PORTATE

Portata 1/2"HP

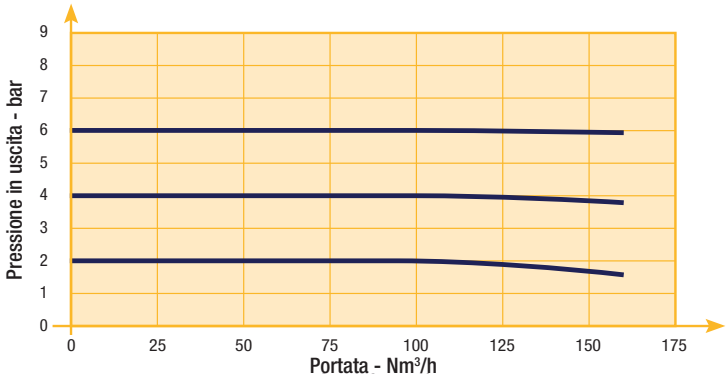

Portata 1"

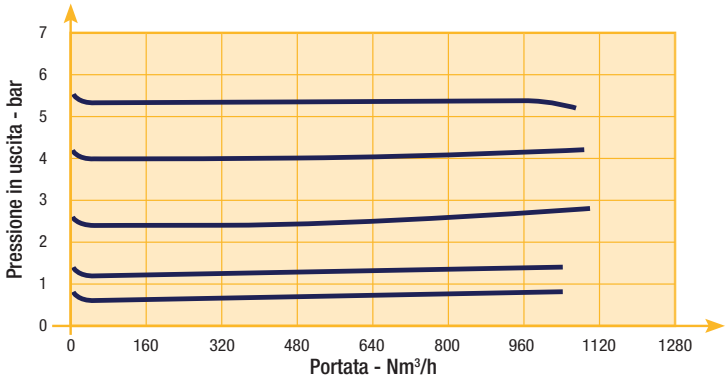

Portata 2"

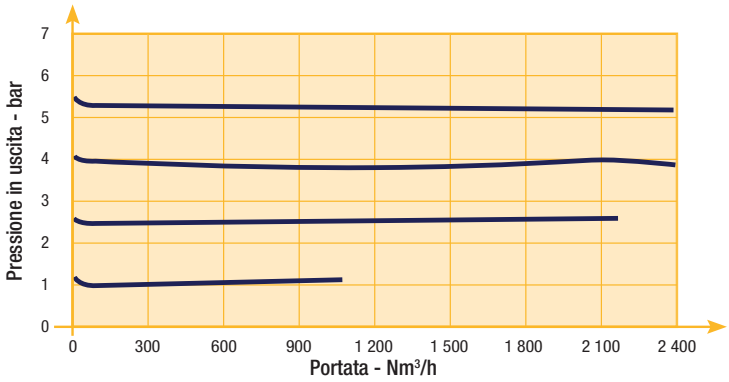

LUCIFER® EPP4 COMFORT 1/2"HP

RIFERIMENTI

Codice	Tubo	Pressione max in ingresso (bar)	Intervallo di pressione (bar)		Segnale di controllo (vedere opzioni)	Schema d'ingombro
P4CG4101D001	G1/2	15	0	12	0-10 V	5
P4CG4201D005	G1/2	21	0	16	0-10 V	6
P4CG4201D003	G1/2	21	0	20	0-10 V	6
P4CG4201D004	G1/2	21	0	20	4-20 mA	6

Per altre configurazioni e funzionalità specifiche vi preghiamo di contattarci.

LUCIFER® EPP4 COMFORT 1/2"HP

SCHEMI D'INGOMBRO

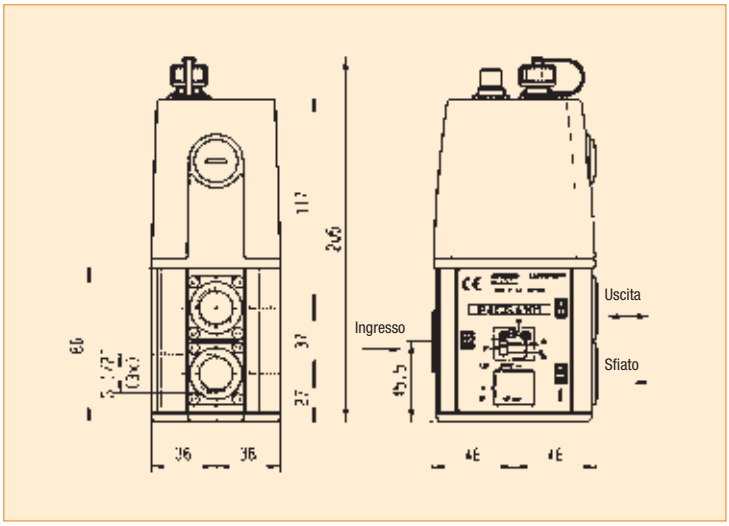

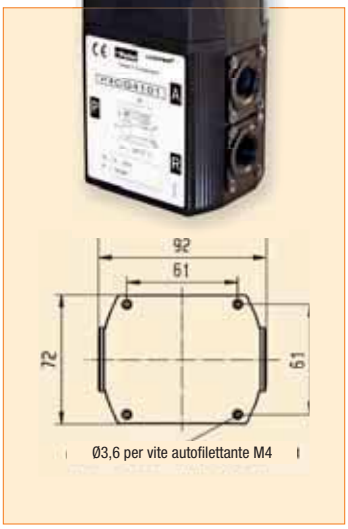

Schema 5

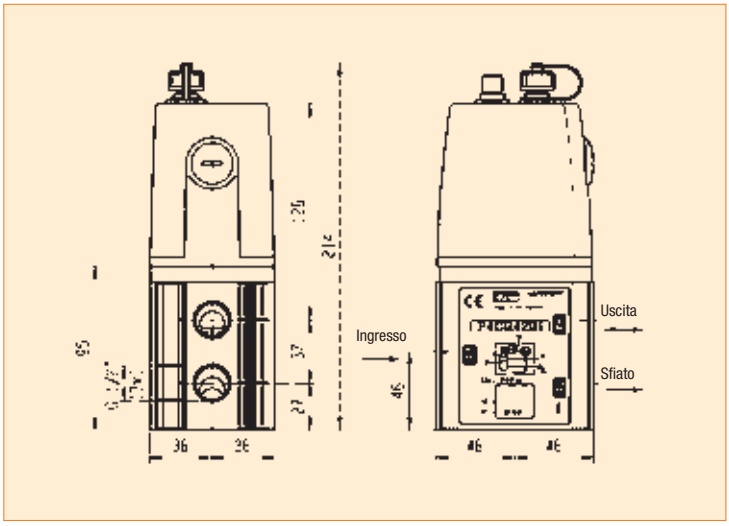

Schema 6

LUCIFER® EPP4 COMFORT 1" & 2"

RIFERIMENTI

Codice	Tubo	Pressione max in ingresso (bar)	Intervallo di pressione (bar)		Segnale di controllo (vedere opzioni)	Schema d'ingombro
P4CG6101C009	G1	12	0	3.5	4-20 mA	7
P4CG6101C011	G1	12	0	5.0	0-10 V	7
P4CG6101C010	G1	12	0	6.0	4-20 mA	7
P4CG6101C001	G1	12	0	10	0-10 V	7
P4CG6101C002	G1	12	0	10	4-20 mA	7
P4CG6201D001	G1	21	0	12	0 - 10 V	7
P4CG6201D003	G1	21	0	20	0-10 V	7
P4CG9101C012	G2	12	0	4.0	4-20 mA	8
P4CG9101C010	G2	12	0	6.0	4-20 mA	8
P4CG9101C001	G2	12	0	10	0-10 V	8
P4CG9101C002	G2	12	0	10	4-20 mA	8

Per altre configurazioni e funzionalità specifiche vi preghiamo di contattarci.

LUCIFER® EPP4 COMFORT 1" & 2"

SCHEMI D'INGOMBRO EPP4 COMFORT GAMMA 1"

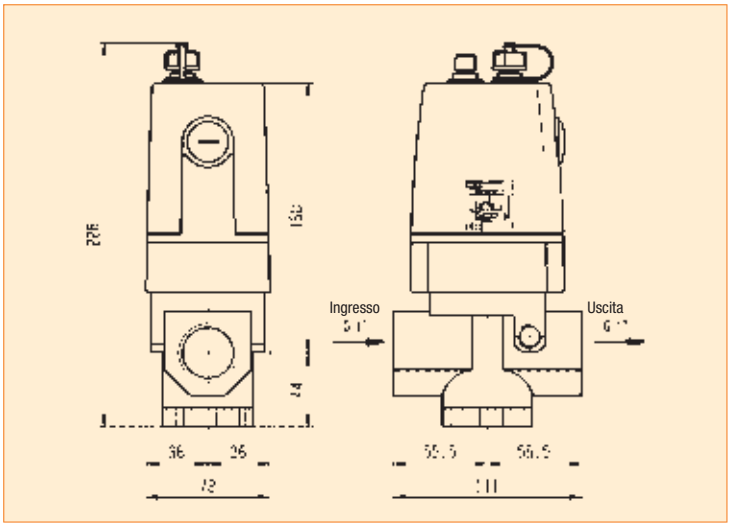

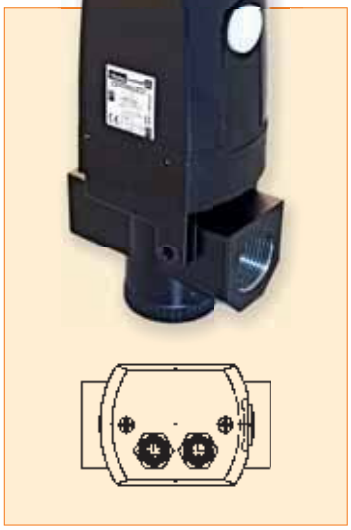

Schema 7

SCHEMI D'INGOMBRO EPP4 COMFORT GAMMA 2"

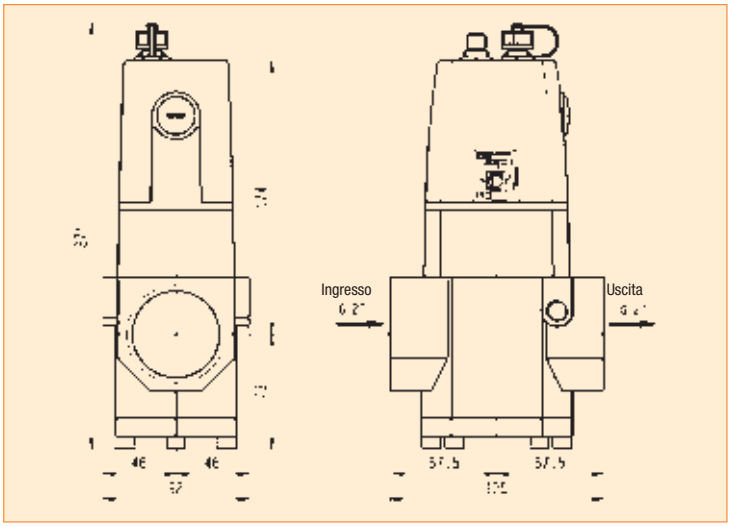

Schema 8

LUCIFER® EPP4 COMFORT 1/2", 1" & 2" ATEX

Basic	1/4" 1/2"
Comfort	1/4" 1/2"
Comfort	1/2" 1" HP 2"
Comfort ATEX	1/2" 1" 2"

DATI TECNICI

	Comfort 1/2" ATEX	Comfort 1" ATEX	Comfort 2" ATEX
Fluidi:	Aria lubrificata o non lubrificata e gas neutri. Filtrazione raccomandata: 50 µm		
Intervallo di temperatura:	**Ambiente: da 0°C a +50°C** Fluido: da 0°C a **+50°C**		
Pressione in ingresso: La pressione in ingresso deve sempre essere superiore di almeno 1 bar rispetto alla pressione regolata.	Intervallo pressione in ingresso: 1 - 12 bar		
Pressione in uscita:	Intervallo pressione in uscita: 0,05 - 10 bar		
Isteresi:	≤ 100 mbar		
Consumo d'aria con segnale di controllo costante:	0		
Certificazione ATEX:	Ex II 3 G/D Ex nA IIC T4 Gc Ex tc IIIB T130°C Dc		
Tensione di alimentazione:	**24V DC** ± 15 %		
Potenza assorbita:	Max. 6 W a 24 V DC con variazioni costanti del segnale di controllo < 2 W senza variazioni del segnale di controllo		
Segnale di controllo:	Analogico 0 - 10 V Analogico 4 - 20 mA		
Segnale del sensore in uscita:	Analogico 0 - 10 V Standard per 0 - 10 bar ; regolabile Analogico 4 - 20 mA Standard per 0 - 10 bar ; regolabile	Digitale 0/24 V per le funzioni di allarme: Errore pressione regolabile (+/-) Attivazione ritardo regolabile Disattivazione ritardo regolabile Logica regolabile (+/-)	
Portata massima:	150 m³/h	1 000 m³/h	2 700 m³/h
Tempo di risposta indicativo: Riempimento 2 - 8 bar: Svuotamento 8 - 2 bar:	Con un volume di 330 cm³ all'uscita del regolatore 120 msec 190 msec	250 msec 400 msec	250 msec 400 msec
Posizione di sicurezza:	In caso di errore nel segnale di controllo o se il segnale è inferiore a 50 mV, la pressione regolata scende automaticamente a 0 bar (per pressioni di 0-10 bar, 100 mV per pressioni superiori a 10 bar). In caso di interruzione dell'alimentazione, la pressione regolata viene mantenuta costante.		
Collegamento elettrico:	M12 - 8 pin; connettore maschio alimentazione/segnale di controllo M12 - 5 pin; connettore maschio comunicazione		
Durata prevista:	> 20 milioni di variazioni del segnale di controllo		
Posizione di montaggio:	Indifferente (posizione raccomandata: verticale, parte elettronica in alto)		
Resistenza alle vibrazioni:	30 g in tutte le direzioni		
Grado di protezione:	IP 54		
Assemblaggio:	Senza silicone		
Compatibilità elettromagnetica: **In conformità con:**	EN 61000-6-1: 2001 EN 61000-6-2: 2001 EN 61000-6-3: 2001 + A11 2004 edizione (01/07/07) EN 61000-6-4: 2001		
Istruzioni per l'installazione e la configurazione:	Vedere il bollettino 408 283 e l'appendice forniti con il prodotto.		

Nota: Parker si riserva il diritto di modificare le specifiche senza preavviso.

LUCIFER® EPP4 COMFORT 1/2", 1" & 2" ATEX

GRAFICI DELLE PORTATE

Portata 1/2"

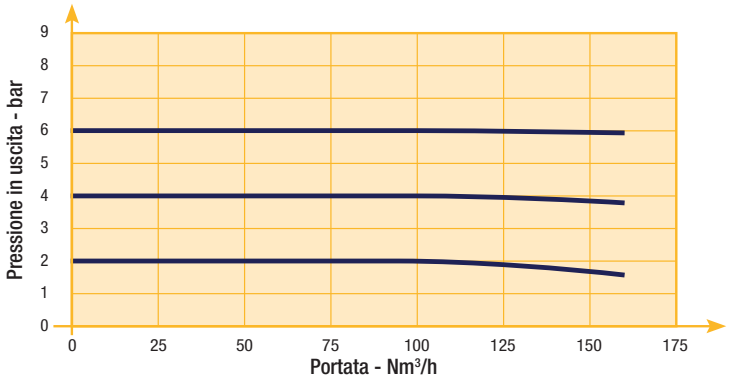

Portata 1"

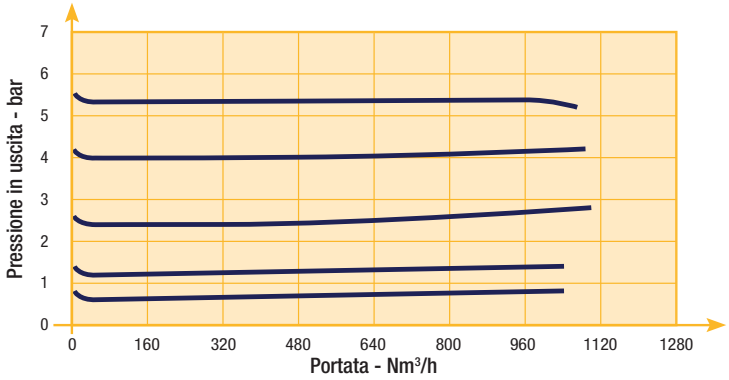

Portata 2"

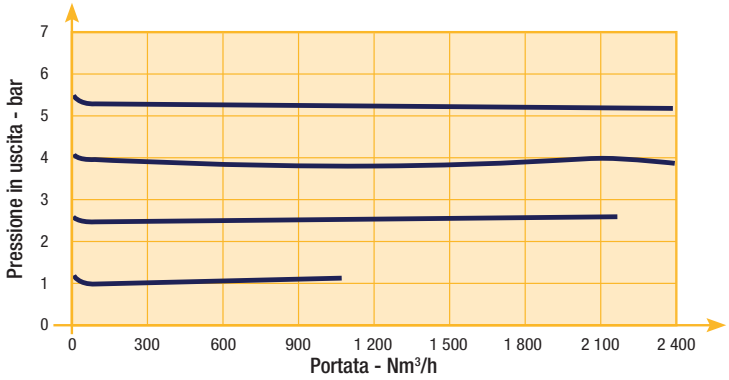

LUCIFER® EPP4 COMFORT 1/2" ATEX

RIFERIMENTI

Codice	Tubo	Pressione max in ingresso (bar)	Intervallo di pressione (bar)		Segnale di controllo (vedere opzioni)	Schema d'ingombro
P4CG4461C001	G1/2	12	0	10	0-10 V	9
P4CG4461C002	G1/2	12	0	10	4-20 mA	9
P4CG4465C001 **	G1/2	12	0	10	0-10 V	9
P4CG4465C002 **	G1/2	12	0	10	4-20 mA	9

** O2

Per altre configurazioni e funzionalità specifiche vi preghiamo di contattarci.

LUCIFER® EPP4 COMFORT 1/2" ATEX

SCHEMI D'INGOMBRO

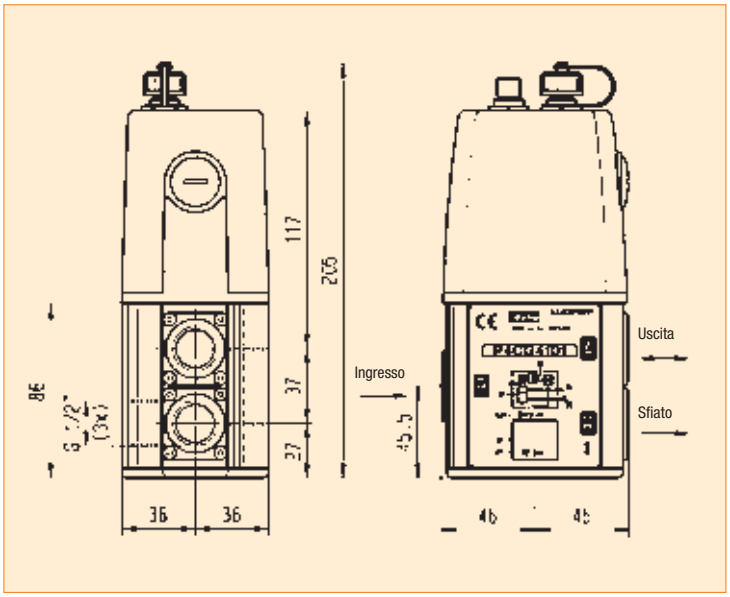

Schema 9

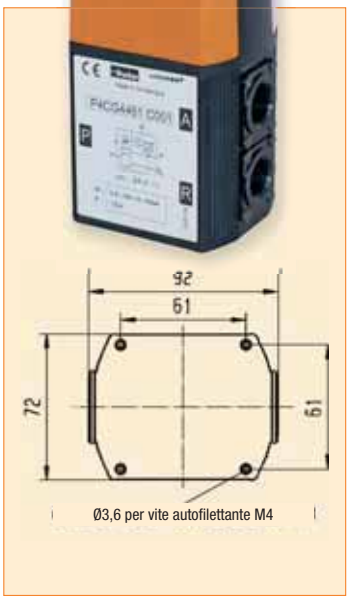

LUCIFER® EPP4 COMFORT 1" & 2" ATEX

RIFERIMENTI

Codice	Tubo	Pressione max in ingresso (bar)	Intervallo di pressione (bar)		Segnale di controllo (vedere opzioni)	Schema d'ingombro
P4CG6161C001	G1	12	0	10	0-10 V	11
P4CG6161C002	G1	12	0	10	4-20 mA	11
P4CG9161C001	G2	12	0	10	0-10 V	12
P4CG9161C002	G2	12	0	10	4-20 mA	12

Per altre configurazioni e funzionalità specifiche vi preghiamo di contattarci.

LUCIFER® EPP4 COMFORT 1" & 2" ATEX

SCHEMI D'INGOMBRO EPP4 COMFORT 1"

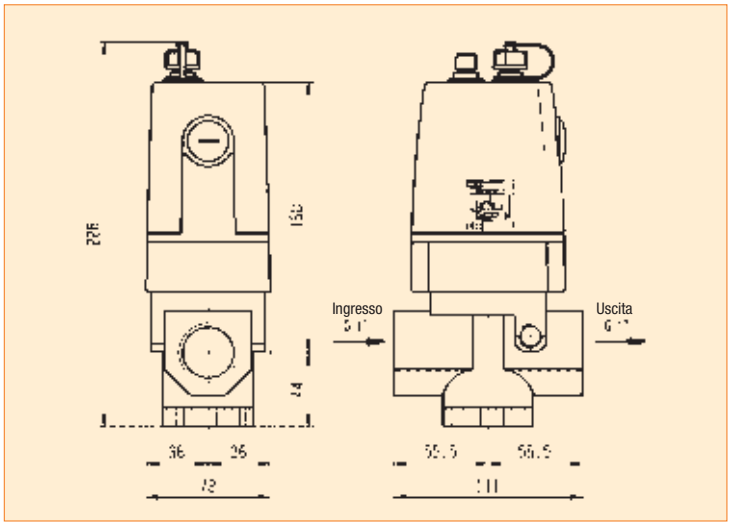

Schema 11

SCHEMI D'INGOMBRO EPP4 COMFORT 2"

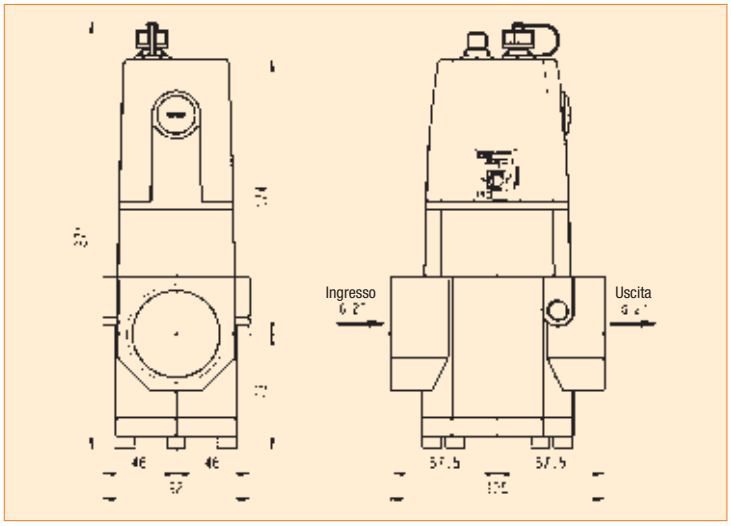

Schema 12

LUCIFER® EPP4
ACCESSORI

STAFFE DI MONTAGGIO
PER EPP4 1/4" BASIC / COMFORT

Questa staffa di montaggio viene fornita di serie con tutti gli EPP4 1/4".

LUCIFER® EPP4
ACCESSORI

STAFFE DI MONTAGGIO
PER EPP4 1/2" BASIC / COMFORT

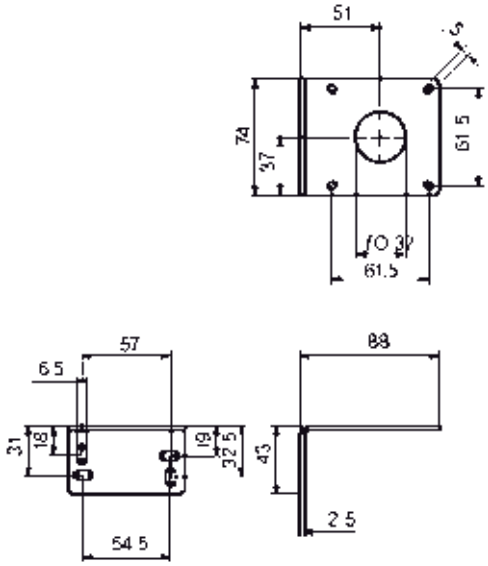

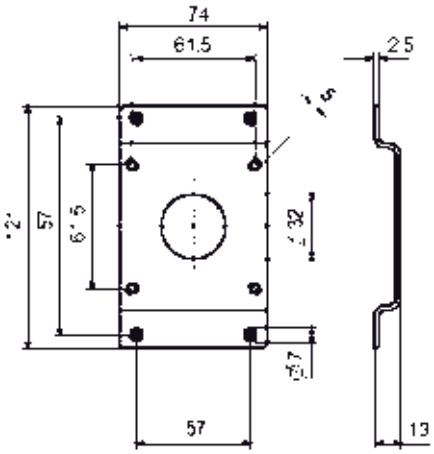

Codice di ordinazione 491367

Codice di ordinazione 491366

LUCIFER® EPP4
ACCESSORI

CAVO DI ALIMENTAZIONE/SEGNALE DI CONTROLLO PER LE VERSIONI BASIC E COMFORT.

Cavo per Basic EPP4

- Cavo da 2 m con connettore diritto stampato M12-4 pin

Codice di ordinazione P8L-MC04A2A-M12

Cavo per Comfort EPP4

- Cavo da 2 m con connettore diritto stampato M12-8 pin

Codice di ordinazione 496796

LUCIFER® EPP4 COMFORT ACCESSORI

calys SOFTWARE

Calys è uno speciale software che abbiamo sviluppato per configurare tutti i parametri della linea EPP4 Comfort.

Il prodotto è un'opzione dell'EPP4.

Per consentire la comunicazione tra l'EPP4 e un PC occorre un cavo specifico.

Calys offre molte funzioni:

- Monitoraggio in tempo reale (segnale di controllo, pressione regolata, tensione di alimentazione, ecc.)
- Registrazione dei parametri principali (segnale di controllo, pressione regolata, tensione di alimentazione, ecc.) in un file Excel
- Taratura libera di ingressi e uscite
- Allarme regolabile (positivonegativo, limiti di pressione, ritardi)
- File di configurazione facili da duplicare
- Guida interattiva completa

- Dati in 4 unità di pressione differenti
- Menu in 4 lingue (inglese, tedesco, francese e italiano)

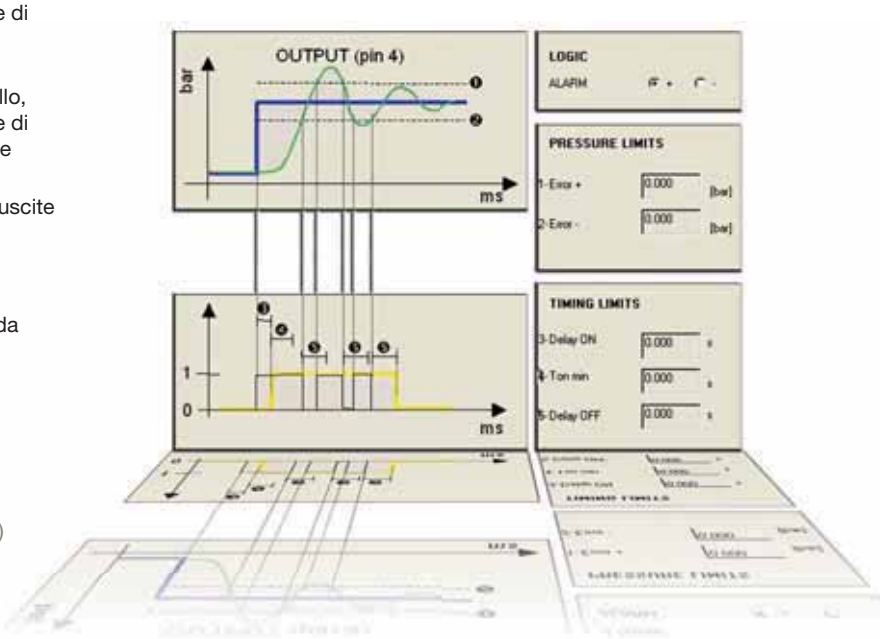

Cavo di comunicazione PC-EPP4 specifico con collegamento RS232 e USB

Codice di ordinazione 496449

Questa opzione è adatta esclusivamente per le aree sicure.

Per scaricare gratuitamente il software Calys fare clic su **www.parker.com/FCDE/Support**

LUCIFER® EPP4 COMFORT ACCESSORI

DISPLAY REMOTO

Questa opzione comprende il display remoto e un cavo di collegamento da 1,5 metri.

Collegato al regolatore di pressione, offre un monitoraggio flessibile.

Questa opzione funziona solo con EPP4 0-10 bar.

Display LED remoto compatto e ad alta visibilità:

- Scale in bar e PSI
- Blocco di sicurezza
- Cavo da 1,5 m
- Staffe di montaggio

Ordinate il display remoto con il codice 496490

Questa opzione è adatta esclusivamente per le aree sicure.

KIT DI MONTAGGIO SU PANNELLO

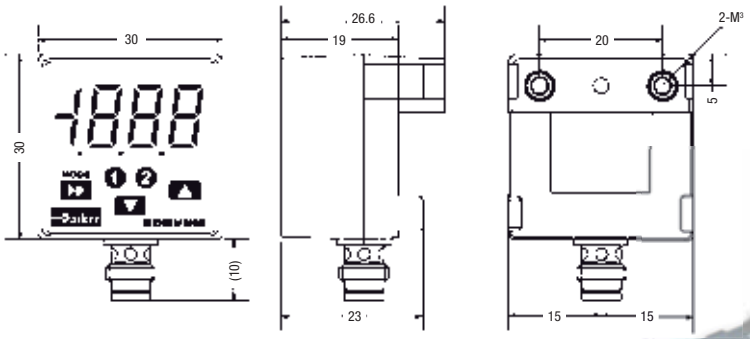

Ordinate il kit di montaggio su pannello con il codice 496601

GAMMA COMPLETA DI BOBINE, HOUSING E COMPONENTI ELETTRICI PER VALVOLE A SOLENOIDE

DEFINIZIONI

HOUSING O KIT DI ASSEMBLAGGIO PER BOBINE, BOBINE E COMPONENTI ELETTRICI

Housing

Un housing è la combinazione degli elementi di fissaggio, tra cui la targa 1, il coperchio 2 o la sottopiastra 6 e l'involucro 4 o 5 che protegge la bobina e i componenti elettrici. Gli housing possono essere in metallo o materiale plastico.

Kit di assemblaggio per bobine

Il kit di assemblaggio per bobine 7 o 9 è composto da una targa, una rondella e un dado. A volte i kit di assemblaggio per bobine sono composti solo da un dado o un dispositivo di fissaggio speciale.

Bobina

Una bobina è composta dall'avvolgimento e dallo stampo in plastica. Sono disponibili tre tipi diversi di bobine che si distinguono per forma e dimensioni: 40 mm 3, 32 mm 8 e 22 mm 10.

Componente elettrico

Un componente elettrico è composto dall'alloggiamento, dal kit di assemblaggio e dalla bobina.

Attenzione

Qualsiasi bobina o componente elettrico Lucifer® può essere alimentato solo quando è montato su una valvola.
Altrimenti esiste il rischio di danneggiare il prodotto e gli ambienti circostanti (surriscaldamento, esplosione, incendio, ecc.).

SOMMARIO

INTRODUZIONE

Indice per componenti elettrici a prova di esplosione 442
Elenco dei gruppi di bobine 443

BOBINE

Bobine per collegamento con connettore DIN 446
Bobine con cavi uscenti 469
Bobine con morsetto a vite 474
Bobine con connettore DIN ISO 481

COMPONENTI ELETTRICI A PROVA DI ESPLOSIONE

Livello di protezione "nAc nCc" 484
Livello di protezione "db" 492
Livello di protezione "mb" 494
Livello di protezione "db mb" 499
Livello di protezione "eb" 504
Livello di protezione "eb mb" 505
Livello di protezione "ia" 508

HOUSING 518

ACCESSORI PER BOBINE 522

AMBIENTI ESPLOSIVI 524

APPENDICI DELLE BOBINE

Diagramma di guida per barriere IS 534

INDICE PER COMPONENTI ELETTRICI A PROVA DI ESPLOSIONE

Codice bobina	Gruppo bobine	Descrizione	Assorbimento CC Pn (W)	Assorbimento CA Pn (W)	Temperatura ambiente	UL	Grado di protezione	Protezione ATEX o NEMA 4X (gas)	Pagina
496637	1.2	Componente elettrico a prova di esplosione "nAc nCc", 22 mm, doppia frequenza	3.0	3.0	Da -20°C a +50°C	-	IP65	II 3 D Ex tc IIIC T 95°C	485
495880	2.0/2.2	Componente elettrico a prova di esplosione "nAc nCc", 32 mm	14.0	14.0	Da -40°C a +50°C	-	IP65	II 3 G Ex nAc nCc IIC T3	489
496155	2.0/2.2	Componente elettrico a sicurezza aumentata a prova di esplosione "nAc nCc", 50 mm	14.0	14.0	Da -40°C a +65°C	-	IP67	II 3 G Ex nAc nCc IIC T3	491
495915	4.0	Componente elettrico a sicurezza aumentata a prova di esplosione "nAc nCc", 50 mm	13.0	11.0	Da -40°C a +65°C	-	IP67	II 3 G Ex nAc nCc IIC T3	490
495870	2.0/2.1	Componente elettrico a prova di esplosione "nAc nCc", 32 mm	9.0	8.0	Da -40°C a +50°C	-	IP65	II 3 G Ex nAc nCc IIC T3/T4	486
495875	3.0	Componente elettrico a prova di esplosione "nAc nCc", 32 mm	7.0	6.0	Da -40°C a +50°C	-	IP65	II 3 G Ex nAc nCc IIC T3/T4	488
496110	2.0/2.1	Componente elettrico a prova di esplosione "nAc nCc", 32 mm	-	9.0	Da -40°C a +50°C	-	IP65	II 3 G Ex nAc nCc IIC T3/T4	486
495865	1.1	Componente elettrico a prova di esplosione "nAc nCc", bassa potenza, 22 mm	2.5	2.0	Da -40°C a +50°C	-	IP65	II 3 G Ex nAc nCc IIC T5	484
496125	6.0	Componente elettrico a prova di esplosione "nAc nCc", bassa potenza, 32 mm	1.6	-	Da -40°C a +50°C	-	IP65	II 3 G Ex nAc nCc IIC T5/T6	487
492670	2.0/2.1	Componente elettrico incapsulato a prova di esplosione "mb", 32 mm	9.0	8.0	Da -40°C a +50°C	-	IP65	II 2 G Ex mb IIC T4	495
482605	1.1	Componente elettrico incapsulato a prova di esplosione "mb", 32 mm	5.0	4.0	Da -40°C a +65°C	-	IP65	II 2 G Ex mb IIC T4/T5	494
482606	1.1	Componente elettrico incapsulato a prova di esplosione "mb", bassa potenza, 32 mm	2.5	2.0	Da -40°C a +65°C	-	IP65	II 2 G Ex mb IIC T4/T5	494
492070	2.0/2.1	Componente elettrico incapsulato a prova di esplosione "mb", con alloggiamento in metallo impermeabile, 50 mm	8.0	9.0	Da -40°C a +65°C	-	IP67	II 2 G Ex mb IIC T4/T5	496
HZ10	2.0/2.1	Componente elettrico incapsulato a prova di esplosione "mb", doppia frequenza	8.0	8.0	Da -40°C a +85°C	-	IP65	II 2 G - Ex mb IIC T3/T4/T5	497
HZ11	2.0/2.2	Componente elettrico incapsulato a prova di esplosione "mb", doppia frequenza	14.0	14	Da -40°C a +85°C	-	IP65	II 2 G - Ex mb IIC T3/T4/T5	498
483270	11.0	Componente elettrico antideflagrante "db", 50 mm	8.0	8.0	Da -40°C a +80°C	-	IP66	II 2 G Ex db IIC T4/T5/T6	492
497105	10.3	Componente elettrico antideflagrante "db", 50 mm	8.0	8.0	Da -50°C a +80°C	-	IP66	II 2 G Ex db IIC T4/T5/T6	493
493640	2.0/2.1	Componente elettrico incapsulato antideflagrante "db mb", doppia frequenza	8.0	8.0	Da -40°C a +75°C	-	IP65	II 2 G Ex db mb IIC T4/T5	503
495905	2.0/2.1	Componente elettrico incapsulato antideflagrante "db mb", 37 mm	8.0	8.0	Da -40°C a +65°C	-	IP67	II 2 G Ex db mb IIC T4	500
496560	10.1	Componente elettrico incapsulato antideflagrante "db mb", 37 mm	8.0	8.0	Da -40°C a +65°C	-	IP67	II 2 G Ex db mb IIC T4	501
496800	10.1	Componente elettrico incapsulato antideflagrante "db mb", 37 mm	8.0	8.0	Da -40°C a +65°C	-	IP67	II 2 G Ex db mb IIC T4	502
495900	6.0	Componente elettrico incapsulato antideflagrante "db mb", bassa potenza, 37 mm	2.0	2.5	Da -40°C a +65°C	-	IP67	II 2 G Ex db mb IIC T4/T5/T6	499
496555	10.2	Componente elettrico incapsulato antideflagrante "db mb", 37 mm	6.0	6.0	Da -40°C a +65°C	-	IP67	II 2 G Ex db mb IIC T4/T5/T6	501
496700	10.2	Componente elettrico incapsulato antideflagrante "db mb", 37 mm	6.0	6.0	Da -40°C a +65°C	-	IP67	II 2 G Ex db mb IIC T4/T5/T6	502
494040	2.0/2.1	Componente elettrico a sicurezza aumentata a prova di esplosione "eb", 50 mm	8.0	8.0	Da -40°C a +90°C	-	IP67	II 2 G Ex eb IIC T3/T4	504
483371	2.0/2.1	Componente elettrico a sicurezza aumentata a prova di esplosione "eb", 50 mm	8.0	8.0	Da -40°C a +65°C	-	IP67	II 2 G Ex eb IIC T4	504
492190	2.0/2.1	Componente elettrico incapsulato a sicurezza aumentata e a prova di esplosione "eb", 50 mm	9.0	11.0	Da -40°C a +75°C	-	IP66	II 2 G Ex eb mb IIC T3/T4	507
492310	10.1	Componente elettrico incapsulato a sicurezza aumentata e a prova di esplosione "eb", 50 mm	6.0	6.0	Da -40°C a +75°C	-	IP66	II 2 G Ex eb mb IIC T4/T5	505
492210	9.0	Componente elettrico incapsulato a sicurezza aumentata e a prova di esplosione "eb", "booster", 50 mm	Da 1.0 a 1.8	-	Da -40°C a +75°C	-	IP66	II 2 G Ex eb mb IIC T5/T6	506
495910	8.0	Componente elettrico intrinsecamente sicuro a prova di esplosione "ia", "booster", 37 mm	Da 0.3 a 1.2	-	Da -40°C a +80°C	-	IP67	II 1 G Ex ia IIC T4/T5/T6	509
496565	9.0	Componente elettrico intrinsecamente sicuro a prova di esplosione "ia", "booster", 37 mm	Da 0.77 a 2.58	-	Da -40°C a +80°C	-	IP67	II 1 G Ex ia IIC T4/T5/T6	510
483580.01	7.0	Componente elettrico intrinsecamente sicuro a prova di esplosione "ia", 32 mm	3.0	-	Da -40°C a +55°C	-	IP65	II 1 G Ex ia IIC T6	508
488650.01	7.0	Componente elettrico intrinsecamente sicuro a prova di esplosione "ia", 50 mm	Da 0.3 a 3.0	-	Da -40°C a +65°C	-	IP66	II 1 G Ex ia IIC T6	513
488660.01	7.0	Componente elettrico intrinsecamente sicuro a prova di esplosione "ia", 50 mm	3.0	-	Da -40°C a +65°C	-	IP67	II 1 G Ex ia IIC T6	514
488670.01	7.0	Componente elettrico intrinsecamente sicuro a prova di esplosione "ia", 50 mm	Da 0.3 a 3.0	-	Da -40°C a +65°C	-	IP65	II 1 G Ex ia IIC T6	515
492965.01	9.0	Componente elettrico intrinsecamente sicuro a prova di esplosione "ia", "booster", 50 mm	Da 0.3 a 2.3	-	Da -40°C a +65°C	-	IP66	II 1 G Ex ia IIC T6	511
482870.01	12.0	Componente elettrico intrinsecamente sicuro a prova di esplosione "ia", 50 mm	3.0	-	Da -40°C a +65°C	-	IP66	II 1 G Ex ia IIC T6	512
490885	7.0	Componente elettrico intrinsecamente sicuro a prova di esplosione, "NEMA", 50 mm	3.0	-	Da -40°C a +60°C	-	NEMA 4 - 4X	Cl. I, Div.I, Gr. A, B, C, D	513
490890	7.0	Componente elettrico intrinsecamente sicuro a prova di esplosione, "NEMA", 50 mm	3.0	-	Da -40°C a +60°C	-	NEMA 4 - 4X	Cl. I, Div.I, Gr. A, B, C, D	514
492335	12.0	Componente elettrico intrinsecamente sicuro a prova di esplosione, "NEMA", 50 mm	3.0	-	Da -40°C a +60°C		NEMA 4 - 4X	Cl. I, Div.I, Gr. A, B, C, D	512

ELENCO DEI GRUPPI DI BOBINE

Le bobine e i componenti elettrici Parker sono classificati per gruppi in base alla loro compatibilità con le valvole a solenoide Parker.

Gruppo	Applicazione
1.1	Valvole standard o serie 2000 con regolatore standard
1.2	Valvole standard o serie 2000 per flusso elevato
1.3	Valvole standard o serie 2000 di bobine W
2.0	Valvole standard o serie 7000 con regolatore standard
2.1	Valvole standard o serie 7000 per bobine da 8 - 9 W
2.2	Valvole standard o serie 7000 per bobine da 14 W
3.0	Valvole standard o serie 7000 con potenza ridotta
4.0	Valvole standard o serie 7000 per bobine bistabili (a impulsi) o componenti elettrici
6.0	Valvole speciali "97" o serie 7000 per bobine o componenti elettrici intrinsecamente sicuri
7.0	Valvole speciali "90" per bobine e componenti elettrici intrinsecamente sicuri
8.0	Valvole speciali "97" o serie 7000 per bobine o componenti elettrici intrinsecamente sicuri con booster
9.0	Valvole speciali "xx" o serie 9000 per bobine o componenti elettrici intrinsecamente sicuri con booster
10.1	Valvole standard o serie 9000 con regolatore standard
10.2	Valvole standard o serie 9000 "db mb"
10.3	Valvole speciali o serie 8000 ''d''
11.0	Valvole standard o serie 9000 "1D"
12.0	Valvole standard o serie 9000 con ripristino manuale
13.0	Valvole speciali o serie 7000 per il trasporto
14.1	Valvole speciali o serie 7000 per bruciatori a olio
14.2	Valvole speciali o serie 7000 per bruciatori a olio
14.3	Valvole speciali o serie 7000 per bruciatori a olio
20.1	Valvole standard o serie 7000 per bobine Z-Y
20.2	Valvole standard o serie 7000 per bobine "a potenza elevata" Z-Y
21.0	Valvole standard o serie 7000 per bobine J-B
22.0	Valvole standard per bobine KP-KT-KH
23.0	Valvole standard per bobine XP-XT per bruciatori a olio
24.0	Valvole standard per bobine Liquipure per la distribuzione di bevande

SOMMARIO

INTRODUZIONE

Indice per componenti elettrici a prova di esplosione 442
Elenco dei gruppi di bobine 443

BOBINE

Bobine per collegamento con connettore DIN 446
Bobine con cavi uscenti 469
Bobine con morsetto a vite 474
Bobine con connettore DIN ISO 481

COMPONENTI ELETTRICI A PROVA DI ESPLOSIONE

Livello di protezione "nAc nCc" 484
Livello di protezione "db" 492
Livello di protezione "mb" 494
Livello di protezione "db mb" 499
Livello di protezione "eb" 504
Livello di protezione "eb mb" 505
Livello di protezione "ia" 508

HOUSING 518

ACCESSORI PER BOBINE 522

AMBIENTI ESPLOSIVI 524

APPENDICI DELLE BOBINE

Diagramma di guida per barriere IS 534

GRUPPO BOBINE

2.0/2.1 BOBINE PER COLLEGAMENTO CON CONNETTORE DIN

BOBINE, 32 mm

Queste bobine possono essere montate con tutte le valvole a solenoide Parker che corrispondono al gruppo di bobine indicato.
Vedere la colonna "Gruppo bobine" nelle pagine delle valvole.

Il gruppo incapsulato è composto da una bobina, un circuito ferromagnetico e un collegamento tipo faston.

L'incapsulamento in materiale sintetico fornisce un alloggiamento compatto efficace, che offre una protezione totale da polvere, olio, acqua e così via.
Facili da montare in spazi ristretti, queste bobine forniscono una protezione antiurto e anticorrosione e semplificano l'adeguamento dell'apparecchiatura esistente ad altri requisiti, ecc.
Queste bobine sono conformi agli standard di sicurezza IEC/CENELEC e alla direttiva europea sulla bassa tensione.

Specifica			Standard	Doppia frequenza
Rif. (senza connettore DIN) Rif. (con connettore DIN)			481865 482725	483510 482635
Gruppo bobine			2.0/2.1	
Grado di protezione			**IP65** secondo gli standard IEC/EN 60529 (con spina DIN)	
Classe di isolamento			F 155°C	
Collegamento elettrico			La bobina viene collegata con un connettore 2P+T secondo EN 175301-803 tipo A.	
Temperatura ambiente			Da -40°C a +50°C L'applicazione è limitata anche dall'intervallo di temperatura della valvola.	
Assorbimento	CC	**Pn** (caldo)	9 W	-
		P (freddo) 20°C	12 W	-
	CA	**Pn** (mantenimento)	8 W	9 W
		Attrazione (freddo)	26 VA (9 W)	32 VA (10 W)
Peso			130 g (senza connettore)	

Tensioni "Vn"	V CA/Hz	Codice Tensione	V CC	Codice tensione	V CA/Hz	Codice Tensione
Dal -10% al +10% della Vn	24/50 48/50 110/50 220-230/50	A2 A4 A5 3D	24 48 110	C2 C4 C5	24/50, 24/60 48/50, 48/60 110-115/50, 120/60 220-240/50, 240/60	P0 S4 S5 S6

Per ordinare una bobina, utilizzare il riferimento e il codice di tensione, ad esempio: **481865** per **24 V CC** = **481865C2**
Altre tensioni sono disponibili nella tabella dei codici di tensione alla fine della sezione delle bobine.

Queste bobine devono essere utilizzate con gli housing appropriati. Di seguito è riportato un esempio.

Il kit di assemblaggio per bobine **Rif. 2995** corrisponde all'"housing" del sistema di numerazione delle valvole Lucifer® (valvola - housing - bobina - tensione).

È composto da una targa su cui sono riportati i dettagli del tipo di valvola, una rondella rotonda e un dado per fissare la bobina da 32 mm alla valvola.

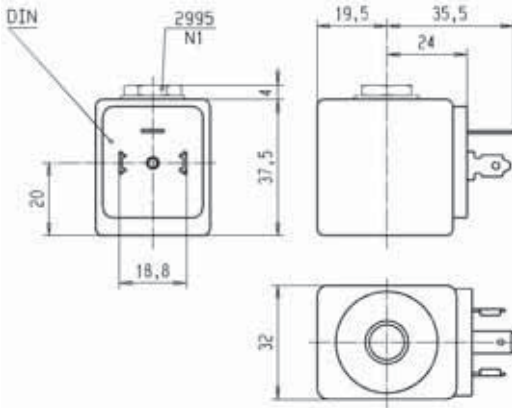

GRUPPO BOBINE
2.0/2.1 2.2

BOBINE PER COLLEGAMENTO CON CONNETTORE DIN

BOBINE A TEMPERATURA ELEVATA, 32 mm

Queste bobine possono essere montate con tutte le valvole a solenoide Parker che corrispondono al gruppo di bobine indicato.
Vedere la colonna "Gruppo bobine" nelle pagine delle valvole.

Il gruppo incapsulato è composto da una bobina, un circuito ferromagnetico e un collegamento tipo faston.

L'incapsulamento in materiale sintetico fornisce un alloggiamento compatto efficace, che offre una protezione totale da polvere, olio, acqua e così via.
Facili da montare in spazi ristretti, queste bobine forniscono una protezione antiurto e anticorrosione e semplificano l'adeguamento dell'apparecchiatura esistente ad altri requisiti, ecc.
Queste bobine sono conformi agli standard di sicurezza IEC/CENELEC e alla direttiva europea sulla bassa tensione.

Specifica			Temperatura elevata	Temperatura e potenza elevate
Rif. (senza connettore DIN) Rif. (con connettore DIN)			492453 492726	492425 492727
Gruppo bobine			2.0/2.1	2.0/2.2
Grado di protezione			**IP65** secondo gli standard IEC/EN 60529 (con connettore DIN)	
Classe di isolamento			H 180°C	
Collegamento elettrico			La bobina viene collegata con un connettore 2P+T secondo EN 175301-803 tipo A.	
Temperatura ambiente			Da -40°C a +50°C L'applicazione è limitata anche dall'intervallo di temperatura della valvola.	
Assorbimento	CC	**Pn** (caldo)	9 W	14 W
		P (freddo) 20°C	12 W	21 W
	CA	**Pn** (mantenimento)	8 W	14 W
		Attrazione (freddo)	26 VA (9 W)	55 VA (18 W)
Peso			130 g (senza connettore)	

Tensioni "Vn"	V CA/Hz	Codice Tensione	V CC	Codice Tensione	V CA/Hz	Codice Tensione	V CC	Codice Tensione
Dal -10% al +10% della Vn	24/50 48/50 110/50 220/50-230/50	A2 A4 A5 3D	12 24 48 110	C1 C2 C4 C5	24/50 110/50 230/50	A2 A5 F4	24	C2

Per ordinare una bobina, utilizzare il riferimento e il codice di tensione, ad esempio: **492453** per **24 V CC = 492453C2**
Altre tensioni sono disponibili nella tabella dei codici di tensione alla fine della sezione delle bobine.

Queste bobine devono essere utilizzate con gli housing appropriati. Di seguito è riportato un esempio.

Il kit di assemblaggio per bobine **Rif. 2995** corrisponde all'"housing" del sistema di numerazione delle valvole Lucifer® (valvola - housing - bobina - tensione).

È composto da una targa su cui sono riportati i dettagli del tipo di valvola, una rondella rotonda e un dado per fissare la bobina da 32 mm alla valvola.

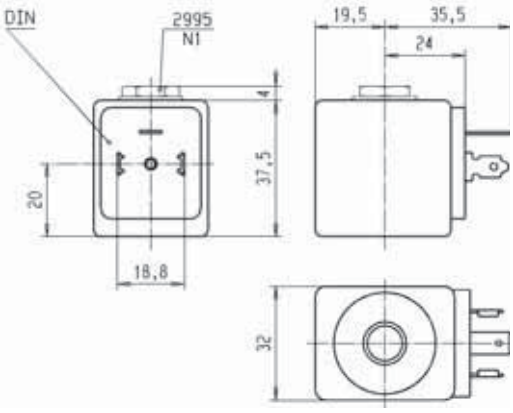

BOBINE A POTENZA RIDOTTA, 32 mm

Queste bobine possono essere montate con tutte le valvole a solenoide Parker che corrispondono al gruppo di bobine indicato.
Vedere la colonna "Gruppo bobine" nelle pagine delle valvole.

Il gruppo incapsulato è composto da una bobina, un circuito ferromagnetico e un collegamento tipo faston.

L'incapsulamento in materiale sintetico fornisce un alloggiamento compatto efficace, che offre una protezione totale da polvere, olio, acqua e così via.
Facili da montare in spazi ristretti, queste bobine forniscono una protezione antiurto e anticorrosione e semplificano l'adeguamento dell'apparecchiatura esistente ad altri requisiti, ecc.
Queste bobine sono conformi agli standard di sicurezza IEC/CENELEC e alla direttiva europea sulla bassa tensione.

Specifica			Potenza ridotta			
Rif. (senza connettore DIN) Rif. (con connettore DIN)			482730 482735			
Gruppo bobine			3.0			
Grado di protezione			**IP65** secondo gli standard IEC/EN 60529 (con connettore DIN)			
Classe di isolamento			F 155°C			
Collegamento elettrico			La bobina viene collegata con un connettore 2P+T secondo EN 175301-803 tipo A.			
Temperatura ambiente			Da -40°C a +50°C L'applicazione è limitata anche dall'intervallo di temperatura della valvola.			
Assorbimento	CC	**Pn** (caldo)	7 W			
		P (freddo) 20°C	9 W			
	CA	**Pn** (mantenimento)	6 W			
		Attrazione (freddo)	20 VA (7 W)			
Peso			130 g (senza connettore)			
Tensioni "Vn" Dal -10% al +10% della Vn			V CA/Hz	Codice Tensione	V CC	Codice Tensione
			48/50 220-230/50	A4 3D	24 48	C2 C4

Per ordinare una bobina, utilizzare il riferimento e il codice di tensione, ad esempio: **482730** per **24 V CC = 482730C2**
Altre tensioni sono disponibili nella tabella dei codici di tensione alla fine della sezione delle bobine.

Queste bobine devono essere utilizzate con gli housing appropriati. Di seguito è riportato un esempio.

Il kit di assemblaggio per bobine **Rif. 2995** corrisponde all'"housing" del sistema di numerazione delle valvole Lucifer® (valvola - housing - bobina - tensione).

È composto da una targa su cui sono riportati i dettagli del tipo di valvola, una rondella rotonda e un dado per fissare la bobina da 32 mm alla valvola.

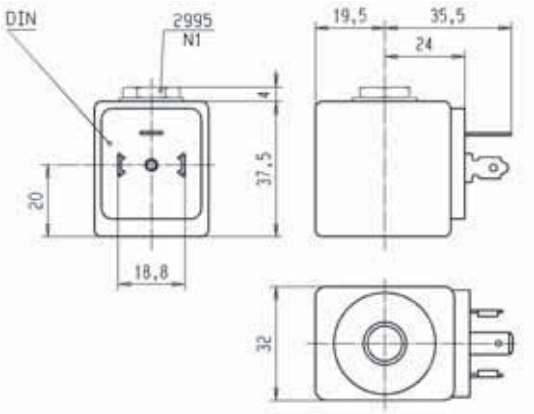

GRUPPO BOBINE

6.0

BOBINE PER COLLEGAMENTO CON CONNETTORE DIN

BOBINE A BASSA POTENZA, 32 mm

Queste bobine possono essere montate con tutte le valvole a solenoide Parker che corrispondono al gruppo di bobine indicato.
Vedere la colonna "Gruppo bobine" nelle pagine delle valvole.

Il gruppo incapsulato è composto da una bobina, un circuito ferromagnetico e un collegamento tipo faston.

L'incapsulamento in materiale sintetico fornisce un alloggiamento compatto efficace, che offre una protezione totale da polvere, olio, acqua e così via.
Facili da montare in spazi ristretti, queste bobine forniscono una protezione antiurto e anticorrosione e semplificano l'adeguamento dell'apparecchiatura esistente ad altri requisiti, ecc.
Queste bobine sono conformi agli standard di sicurezza IEC/CENELEC e alla direttiva europea sulla bassa tensione.

Specifica			Miniwatt	
Riferimento (senza connettore DIN) Riferimento (con connettore DIN)			482740 482745	
Gruppo bobine			6.0	
Grado di protezione			**IP65** secondo gli standard IEC/EN 60529 (con connettore DIN)	
Classe di isolamento			F 155°C	
Collegamento elettrico			La bobina viene collegata con un connettore 2P+T secondo EN 175301-803 tipo A.	
Temperatura ambiente			Da -40°C a +50°C L'applicazione è limitata anche dall'intervallo di temperatura della valvola.	
Assorbimento	CC	**Pn** (caldo)	1.6 W	
		P (freddo) 20°C	2.1 W	
	CA	**Pn** (mantenimento)	-	
		Attrazione (freddo)	-	
Peso			130 g (senza connettore)	
Tensioni "Vn"			V CC	Codice Tensione
Dal -10% al +10% della Vn			24 48 110	C2 C4 C5

Per ordinare una bobina, utilizzare il riferimento e il codice di tensione, ad esempio: **482740** per **24 V CC** = **482740C2**
Altre tensioni sono disponibili nella tabella dei codici di tensione alla fine della sezione delle bobine.

Queste bobine devono essere utilizzate con gli housing appropriati. Di seguito è riportato un esempio.

Il kit di assemblaggio per bobine **Rif. 2995** corrisponde all'"housing" del sistema di numerazione delle valvole Lucifer® (valvola - housing - bobina - tensione).

È composto da una targa su cui sono riportati i dettagli del tipo di valvola, una rondella rotonda e un dado per fissare la bobina da 32 mm alla valvola.

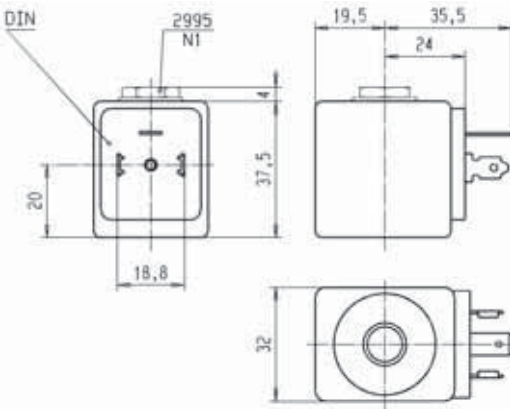

GRUPPO BOBINE

2.0/2.1

BOBINE PER COLLEGAMENTO CON CONNETTORE DIN

BOBINE UL, 32 mm

Queste bobine possono essere montate con tutte le valvole a solenoide Parker che corrispondono al gruppo di bobine indicato.
Vedere la colonna "Gruppo bobine" nelle pagine delle valvole.

Il gruppo incapsulato è composto da una bobina, un circuito ferromagnetico e un collegamento tipo faston.

L'incapsulamento in materiale sintetico fornisce un alloggiamento compatto efficace, che offre una protezione totale da polvere, olio, acqua e così via.
Facili da montare in spazi ristretti, queste bobine forniscono una protezione antiurto e anticorrosione e semplificano l'adeguamento dell'apparecchiatura esistente ad altri requisiti, ecc.
Queste bobine sono conformi agli standard di sicurezza IEC/CENELEC e alla direttiva europea sulla bassa tensione.
Il connettore DIN deve essere ordinato separatamente (vedere la sezione Accessori per bobine).

Specifica			Bobina Certificata UL - File UL E200N - Denominazione AMIF			
Riferimento (senza connettore DIN)			491514			
Gruppo bobine			2.0/2.1			
Grado di protezione			**IP65** secondo gli standard IEC/EN 60529 (con connettore DIN)			
Classe di isolamento			F 155°C			
Collegamento elettrico			La bobina viene collegata con un connettore 2P+T secondo EN 175301-803 tipo A.			
Temperatura ambiente			Da -40°C a +50°C L'applicazione è limitata anche dall'intervallo di temperatura della valvola.			
Assorbimento	CC	**Pn** (caldo)	-		12 W	
		P (freddo) 20°C	-		16 W	
	CA	**Pn** (mantenimento)	11 W		-	
		Attrazione (freddo)	40 VA (13 W)		-	
Peso			130 g (senza connettore)			
Tensioni "Vn" Dal -15% al +10% della Vn			V CA/Hz	Codice Tensione	V CC	Codice Tensione
			110/50-120/60 220/50-240/60	P3 Q3	24	C2

Per ordinare una bobina, utilizzare il riferimento e il codice di tensione, ad esempio: **491514** per **24 V CC = 491514C2**
Altre tensioni sono disponibili nella tabella dei codici di tensione alla fine della sezione delle bobine.

Queste bobine devono essere utilizzate con gli housing appropriati. Di seguito è riportato un esempio.

Il kit di assemblaggio per bobine **Rif. 2995** con valvola non UL e Rif. 2995.03 con valvola UL corrisponde all'"housing" del sistema di numerazione delle valvole Lucifer® (valvola - housing - bobina - tensione). È composto da una targa su cui sono riportati i dettagli del tipo di valvola, una rondella rotonda e un dado per fissare la bobina da 32 mm alla valvola.

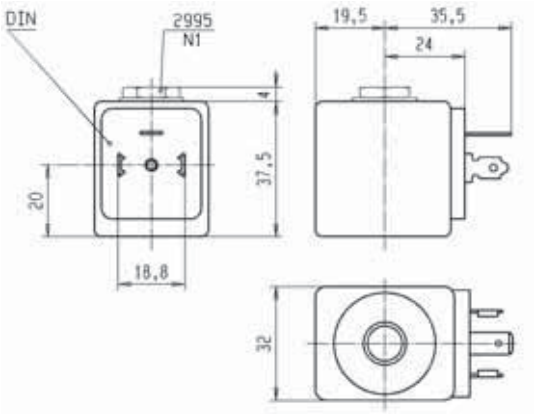

GRUPPO BOBINE

14.2

BOBINE PER COLLEGAMENTO CON CONNETTORE DIN

BOBINE UL, 32 mm

Queste bobine possono essere montate con tutte le valvole a solenoide Parker che corrispondono al gruppo di bobine indicato.
Vedere la colonna "Gruppo bobine" nelle pagine delle valvole.

Il gruppo incapsulato è composto da una bobina, un circuito ferromagnetico e un collegamento tipo faston.

L'incapsulamento in materiale sintetico fornisce un alloggiamento compatto efficace, che offre una protezione totale da polvere, olio, acqua e così via.
Facili da montare in spazi ristretti, queste bobine forniscono una protezione antiurto e anticorrosione e semplificano l'adeguamento dell'apparecchiatura esistente ad altri requisiti, ecc.
Queste bobine sono conformi agli standard di sicurezza IEC/CENELEC e alla direttiva europea sulla bassa tensione.

Specifica			Bobina per bruciatori a olio Certificata UL	
Riferimento (senza connettore DIN)			483764	
Gruppo bobine			14.2	
Grado di protezione			**IP65** secondo gli standard IEC/EN 60529 (con connettore DIN)	
Classe di isolamento			F 155°C	
Collegamento elettrico			Con connettore DIN 43650 A	
Temperatura ambiente			Da -40°C a +50°C L'applicazione è limitata anche dall'intervallo di temperatura della valvola.	
Assorbimento	CC	**Pn** (caldo)	-	
		P (freddo) 20°C	-	
	CA	**Pn** (mantenimento)	9 W	
		Attrazione (freddo)	-	
Peso			138 g	
Tensioni "Vn"			V CA/Hz	Codice Tensione
Dal -15% al +10% della Vn			240/50-60 110/50-115/60 230/50-240/60	Q1 Q9 T1

Per ordinare una bobina, utilizzare il riferimento e il codice di tensione, ad esempio: **483764** per **240/50-60** = **483764Q1**
Altre tensioni sono disponibili nella tabella dei codici di tensione alla fine della sezione delle bobine.

Queste bobine devono essere utilizzate con gli housing appropriati. Di seguito è riportato un esempio.

Il kit di assemblaggio per bobine **Rif. 2995** corrisponde all'"housing" del sistema di numerazione delle valvole Lucifer® (valvola - housing - bobina - tensione).

È composto da una targa su cui sono riportati i dettagli del tipo di valvola, una rondella rotonda e un dado per fissare la bobina da 32 mm alla valvola.

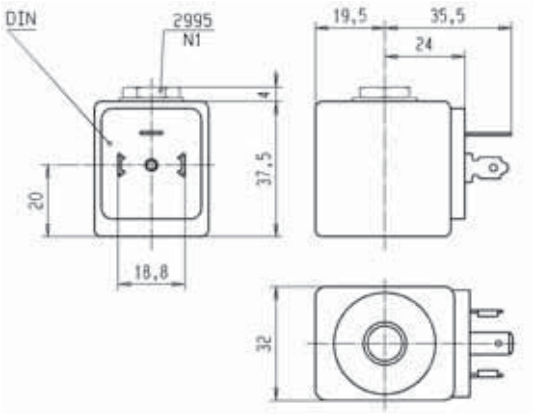

BOBINE PER COLLEGAMENTO CON CONNETTORE DIN

BOBINE PER JET VALVES, 32 mm

Queste bobine possono essere montate con tutte le valvole a solenoide Parker che corrispondono al gruppo di bobine indicato.
Vedere la colonna "Gruppo bobine" nelle pagine delle valvole.

Il gruppo incapsulato è composto da una bobina, un circuito ferromagnetico e un collegamento tipo faston.

L'incapsulamento in materiale sintetico fornisce un alloggiamento compatto efficace, che offre una protezione totale da polvere, olio, acqua e così via.
Facili da montare in spazi ristretti, queste bobine forniscono una protezione antiurto e anticorrosione e semplificano l'adeguamento dell'apparecchiatura esistente ad altri requisiti, ecc.
Queste bobine sono conformi agli standard di sicurezza IEC/CENELEC e alla direttiva europea sulla bassa tensione.

Specifica			Bobina 14 W, 32 mm			
Riferimento			483816			
Gruppo bobine			2.2			
Grado di protezione			**IP65** secondo gli standard IEC/EN 60529 (con connettore DIN)			
Classe di isolamento			F 155°C			
Collegamento elettrico			Con connettore DIN 43650 A			
Temperatura ambiente			Da -40°C a +50°C L'applicazione è limitata anche dall'intervallo di temperatura della valvola.			
Assorbimento	CC	**Pn** (caldo)	14 W			
		P (freddo) 20°C	-			
	CA	**Pn** (mantenimento)	14 W			
		Attrazione (freddo)	-			
Peso			160 g			
Tensioni "Vn"			V CA/Hz	Codice Tensione	V CC	Codice Tensione
Dal -10% al +10% della Vn			24/50	A2	24 V	C2

Per ordinare una bobina, utilizzare il riferimento e il codice di tensione, ad esempio: **483816** per **24 V CC** = **483816C2**
Altre tensioni sono disponibili nella tabella dei codici di tensione alla fine della sezione delle bobine.

Queste bobine devono essere utilizzate con gli housing appropriati. Di seguito è riportato un esempio.

Il kit di assemblaggio per bobine **Rif. 2995** corrisponde all'"housing" del sistema di numerazione delle valvole Lucifer® (valvola - housing - bobina - tensione).

È composto da una targa su cui sono riportati i dettagli del tipo di valvola, una rondella rotonda e un dado per fissare la bobina da 32 mm alla valvola.

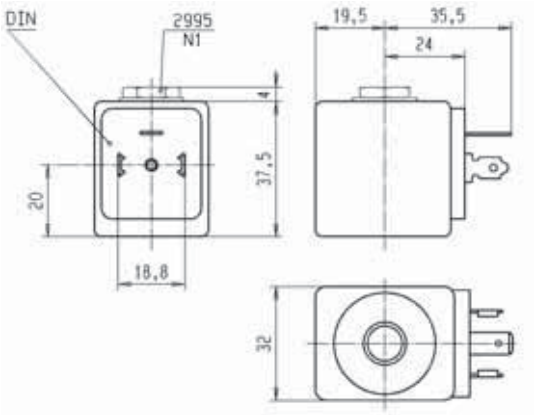

GRUPPO BOBINE

1.1 BOBINE PER COLLEGAMENTO CON CONNETTORE DIN

BOBINE, 22 mm

Queste bobine possono essere montate con tutte le valvole a solenoide Parker che corrispondono al gruppo di bobine indicato.
Vedere la colonna "Gruppo bobine" nelle pagine delle valvole.

Queste bobine sono state progettate per le valvole dotate di un gruppo di tubi in miniatura (valvole serie 2000). Il gruppo incapsulato è composto da una bobina, un circuito ferromagnetico e un collegamento tipo faston.

L'incapsulamento in materiale sintetico fornisce un alloggiamento compatto efficace, che offre una protezione totale da polvere, olio, acqua e così via.
Facili da montare in spazi ristretti, queste bobine forniscono una protezione antiurto e anticorrosione e semplificano l'adeguamento dell'apparecchiatura esistente ad altri requisiti, ecc.
Queste bobine sono conformi agli standard di sicurezza IEC/CENELEC e alla direttiva europea sulla bassa tensione.

Specifica			Potenza bassa				Potenza elevata			
Rif. (senza connettore DIN) Rif. (con connettore DIN)			488980 481045				481180 481530			
Gruppo bobine			1.1							
Grado di protezione			**IP65** secondo gli standard IEC/EN 60529 (con connettore DIN)							
Classe di isolamento			F 155°C							
Collegamento elettrico			La bobina viene collegata con un connettore 2P+T secondo EN 175301-803 tipo B.							
Temperatura ambiente			Da -40°C a +50°C L'applicazione è limitata anche dall'intervallo di temperatura della valvola.							
Assorbimento	CC	**Pn** (caldo)	2.5 W				5 W			
		P (freddo) 20°C	3 W				6.5 W			
	CA	**Pn** (mantenimento)	2 W				4 W			
		Attrazione (freddo)	5.7 VA (2.5 W)				8.9 VA (5 W)			
Peso			100 g con connettore DIN							
Tensioni "Vn"			V CA/Hz	Codice Tensione	V CC	Codice Tensione	V CA/Hz	Codice Tensione	V CC	Codice Tensione
Dal -10% al +10% della Vn			24/50 48/50 110/50-115/50 220/50-230/50	A2 A4 0A 3D	24 48 110	C2 C4 C5	24/50 110/50-115/50 220/50-230/50	A2 0A 3D	24	C2

Per ordinare una bobina, utilizzare il riferimento e il codice di tensione, ad esempio: **488980** per **24 V CC** = **488980C2**
Altre tensioni sono disponibili nella tabella dei codici di tensione alla fine della sezione delle bobine.

Queste bobine devono essere utilizzate con gli housing appropriati. Di seguito è riportato un esempio.

Il kit di assemblaggio per bobine **Rif. 8993** corrisponde al sistema di numerazione per gli housing delle valvole Lucifer® (valvola - housing - bobina - tensione).

È composto da una targa su cui sono riportati i dettagli del tipo di valvola, una rondella e un dado per fissare la bobina da 22 mm alla valvola.

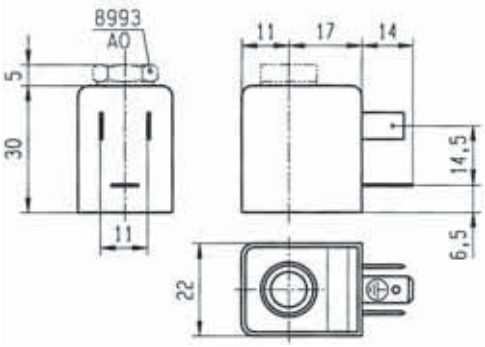

BOBINE PER COLLEGAMENTO CON CONNETTORE DIN

BOBINE UL, 22 mm

Queste bobine possono essere montate con tutte le valvole a solenoide Parker che corrispondono al gruppo di bobine indicato.
Vedere la colonna "Gruppo bobine" nelle pagine delle valvole.

Queste bobine sono state progettate per le valvole dotate di un gruppo di tubi in miniatura (valvole serie 2000). Il gruppo incapsulato è composto da una bobina, un circuito ferromagnetico e un collegamento tipo faston.

L'incapsulamento in materiale sintetico fornisce un alloggiamento compatto efficace, che offre una protezione totale da polvere, olio, acqua e così via.
Facili da montare in spazi ristretti, queste bobine forniscono una protezione antiurto e anticorrosione e semplificano l'adeguamento dell'apparecchiatura esistente ad altri requisiti, ecc.
Queste bobine sono conformi agli standard di sicurezza IEC/CENELEC e alla direttiva europea sulla bassa tensione.

Specifica			UL standard (solo se usata con valvole 321K, 121M, 131M)			
Riferimento (senza connettore DIN) Riferimento (con connettore DIN)			492912 492919			
Gruppo bobine			1.1			
Grado di protezione			**IP65** secondo gli standard IEC/EN 60529 (con connettore DIN)			
Classe di isolamento			A 105°C per UL/CSA			
Collegamento elettrico			La bobina viene collegata con un connettore 2P+T secondo EN 175301-803 tipo B.			
Temperatura ambiente			Da -40°C a +50°C L'applicazione è limitata anche dall'intervallo di temperatura della valvola.			
Assorbimento	CC	**Pn** (caldo)	4 W			
		P (freddo) 20°C	4.5 W			
	CA	**Pn** (mantenimento)	3 W			
		Attrazione (freddo)	7.5 VA (4 W)			
Peso			100 g con connettore DIN			
Tensioni "Vn"			V CA/Hz	Codice Tensione	V CC	Codice Tensione
Dal -15% al +10% della Vn			48/50-48/60 115/50-120/60	S4 P8	24	C2

Per ordinare una bobina, utilizzare il riferimento e il codice di tensione, ad esempio: **492912** per **24 V CC = 492412C2**
Altre tensioni sono disponibili nella tabella dei codici di tensione alla fine della sezione delle bobine.

Queste bobine devono essere utilizzate con gli housing appropriati. Di seguito è riportato un esempio.

Il kit di assemblaggio per bobine **Rif. 8993** corrisponde all'"housing" del sistema di numerazione delle valvole Lucifer® (valvola - housing - bobina - tensione).

È composto da una targa su cui sono riportati i dettagli del tipo di valvola, una rondella rotonda e un dado per fissare la bobina da 22 mm alla valvola.

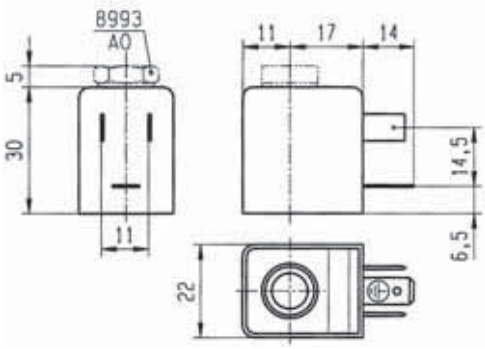

GRUPPO BOBINE

1.1

BOBINE PER COLLEGAMENTO CON CONNETTORE DIN

BOBINE A DOPPIA FREQUENZA, 22 mm

Queste bobine possono essere montate con tutte le valvole a solenoide Parker che corrispondono al gruppo di bobine indicato.
Vedere la colonna "Gruppo bobine" nelle pagine delle valvole.

Queste bobine sono state progettate per le valvole dotate di un gruppo di tubi in miniatura (valvole serie 2000). Il gruppo incapsulato è composto da una bobina, un circuito ferromagnetico e un collegamento tipo faston.

L'incapsulamento in materiale sintetico fornisce un alloggiamento compatto efficace, che offre una protezione totale da polvere, olio, acqua e così via.
Facili da montare in spazi ristretti, queste bobine forniscono una protezione antiurto e anticorrosione e semplificano l'adeguamento dell'apparecchiatura esistente ad altri requisiti, ecc.
Queste bobine sono conformi agli standard di sicurezza IEC/CENELEC e alla direttiva europea sulla bassa tensione.

Il connettore DIN deve essere ordinato separatamente (vedere la sezione Accessori per bobine).

Specifica			Doppia frequenza	
Riferimento (senza connettore DIN)			483590	
Gruppo bobine			1.1	
Grado di protezione			**IP65** secondo gli standard IEC/EN 60529 (con connettore DIN)	
Classe di isolamento			F 155°C	
Collegamento elettrico			La bobina viene collegata con un connettore 2P+T secondo EN 175301-803 tipo B.	
Temperatura ambiente			Da -40°C a +50°C L'applicazione è limitata anche dall'intervallo di temperatura della valvola.	
Assorbimento	CC	**Pn** (caldo)	-	
		P (freddo) 20°C	-	
	CA	**Pn** (mantenimento)	3 W	
		Attrazione (freddo)	7.5 VA (4 W)	
Peso			100 g con connettore DIN	
Tensioni "Vn"			V CA/Hz	Codice Tensione
Dal -10% al +10% della Vn			24/50, 24/60 48/50, 48/60 110-115/50, 120/60 220-240/50, 240/60	P0 S4 S5 S6

Per ordinare una bobina, utilizzare il riferimento e il codice di tensione, ad esempio: **483590** per **24/50, 24/60** = **483590P0**
Altre tensioni sono disponibili nella tabella dei codici di tensione alla fine della sezione delle bobine.

Queste bobine devono essere utilizzate con gli housing appropriati. Di seguito è riportato un esempio.

Il kit di assemblaggio per bobine **Rif. 8993** corrisponde all'"housing" del sistema di numerazione delle valvole Lucifer® (valvola - housing - bobina - tensione).

È composto da una targa su cui sono riportati i dettagli del tipo di valvola, una rondella rotonda e un dado per fissare la bobina da 22 mm alla valvola.

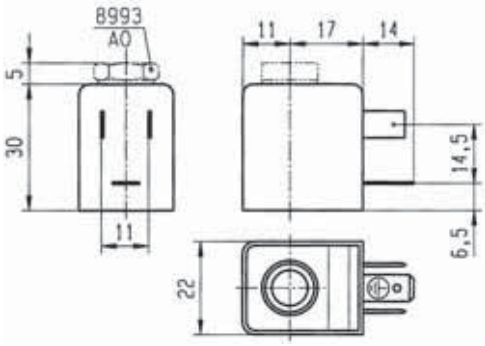

BOBINE PER COLLEGAMENTO CON CONNETTORE DIN

BOBINE A DOPPIA FREQUENZA, 22 mm

Queste bobine possono essere montate con tutte le valvole a solenoide Parker che corrispondono al gruppo di bobine indicato.
Vedere la colonna "Gruppo bobine" nelle pagine delle valvole.

Queste bobine sono state progettate per le valvole dotate di un gruppo di tubi in miniatura (valvole serie 2000). Il gruppo incapsulato è composto da una bobina, un circuito ferromagnetico e un collegamento tipo faston.

L'incapsulamento in materiale sintetico fornisce un alloggiamento compatto efficace, che offre una protezione totale da polvere, olio, acqua e così via.
Facili da montare in spazi ristretti, queste bobine forniscono una protezione antiurto e anticorrosione e semplificano l'adeguamento dell'apparecchiatura esistente ad altri requisiti, ecc.
Queste bobine sono conformi agli standard di sicurezza IEC/CENELEC e alla direttiva europea sulla bassa tensione.

Il connettore DIN deve essere ordinato separatamente (vedere la sezione Accessori per bobine).

Specifica			Doppia frequenza	
Riferimento (senza connettore DIN)			488143	
Gruppo bobine			1.1	
Grado di protezione			**IP65** secondo gli standard IEC/EN 60529 (con connettore DIN)	
Classe di isolamento			F 155°C	
Collegamento elettrico			La bobina viene collegata con un connettore 2P+T secondo EN 175301-803 tipo B.	
Temperatura ambiente			Da -40°C a +50°C L'applicazione è limitata anche dall'intervallo di temperatura della valvola.	
Assorbimento	CC	**Pn** (caldo)	-	
		P (freddo) 20°C	-	
	CA	**Pn** (mantenimento)	2.5 W	
		Attrazione (freddo)	-	
Peso			60 g	
Tensioni "Vn"			V CA/Hz	Codice Tensione
Dal -10% al +10% della Vn			100/50-60 200/50-60	P1 P6

Per ordinare una bobina, utilizzare il riferimento e il codice di tensione, ad esempio: **488143** per **100/50-60** = **488143P1**
Altre tensioni sono disponibili nella tabella dei codici di tensione alla fine della sezione delle bobine.

Queste bobine devono essere utilizzate con gli housing appropriati. Di seguito è riportato un esempio.

Il kit di assemblaggio per bobine **Rif. 8993** corrisponde all'"housing" del sistema di numerazione delle valvole Lucifer® (valvola - housing - bobina - tensione).

È composto da una targa su cui sono riportati i dettagli del tipo di valvola, una rondella rotonda e un dado per fissare la bobina da 22 mm alla valvola.

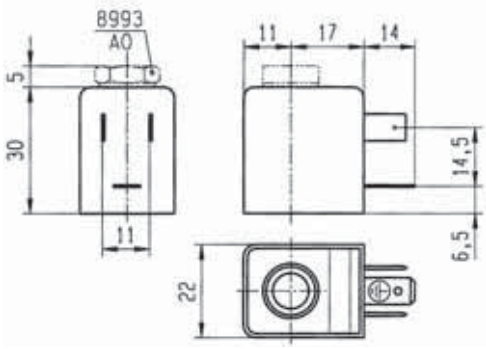

GRUPPO BOBINE

1.2

BOBINE PER COLLEGAMENTO CON CONNETTORE DIN

BOBINE A DOPPIA FREQUENZA, 22 mm

Queste bobine possono essere montate con tutte le valvole a solenoide Parker che corrispondono al gruppo di bobine indicato.
Vedere la colonna "Gruppo bobine" nelle pagine delle valvole.

Queste bobine sono state progettate per le valvole dotate di un gruppo di tubi in miniatura (valvole serie 2000). Il gruppo incapsulato è composto da una bobina, un circuito ferromagnetico e un collegamento tipo faston.

L'incapsulamento in materiale sintetico fornisce un alloggiamento compatto efficace, che offre una protezione totale da polvere, olio, acqua e così via.
Facili da montare in spazi ristretti, queste bobine forniscono una protezione antiurto e anticorrosione e semplificano l'adeguamento dell'apparecchiatura esistente ad altri requisiti, ecc.
Queste bobine sono conformi agli standard di sicurezza IEC/CENELEC e alla direttiva europea sulla bassa tensione.
Il connettore DIN deve essere ordinato separatamente (vedere la sezione Accessori per bobine).

Specifica			Doppia frequenza			
Riferimento (senza connettore DIN)			496131			
Gruppo bobine			1.2			
Grado di protezione			**IP65** secondo gli standard IEC/EN 60529 (con connettore DIN)			
Classe di isolamento			F 155°C			
Collegamento elettrico			La bobina viene collegata con un connettore 2P+T secondo EN 175301-803 tipo B.			
Temperatura ambiente			Da -40°C a +50°C L'applicazione è limitata anche dall'intervallo di temperatura della valvola.			
Assorbimento	CC	**Pn** (caldo)	3 W			
		P (freddo) 20°C	-			
	CA	**Pn** (mantenimento)	3 W			
		Attrazione (freddo)	-			
Peso			60 g			
Tensioni "Vn"			V CA/Hz	Codice Tensione	V CC	Codice Tensione
Dal -10% al +10% della Vn			24/50-60 110/50-60 230/50-60 48/50-60	P0 P2 P9 S4	24 V 48 V 110 V	C2 C4 C5

Per ordinare una bobina, utilizzare il riferimento e il codice di tensione, ad esempio: **496131** per **24 V CC** = **496131C2**
Altre tensioni sono disponibili nella tabella dei codici di tensione alla fine della sezione delle bobine.

"Il kit dell'housing è già incluso nel riferimento della bobina, quindi non è necessario ordinarlo separatamente."

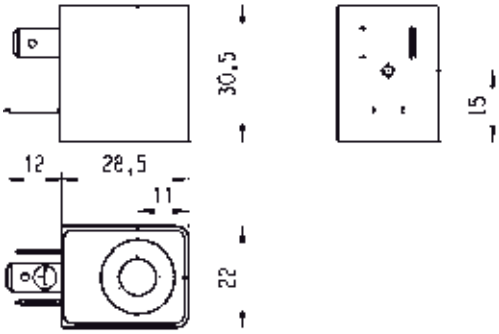

BOBINE A DOPPIA FREQUENZA, 22 mm

Queste bobine possono essere montate con tutte le valvole a solenoide Parker che corrispondono al gruppo di bobine indicato.
Vedere la colonna "Gruppo bobine" nelle pagine delle valvole.

Queste bobine sono state progettate per le valvole dotate di un gruppo di tubi in miniatura (valvole serie 2000). Il gruppo incapsulato è composto da una bobina, un circuito ferromagnetico e un collegamento tipo faston.

L'incapsulamento in materiale sintetico fornisce un alloggiamento compatto efficace, che offre una protezione totale da polvere, olio, acqua e così via.
Facili da montare in spazi ristretti, queste bobine forniscono una protezione antiurto e anticorrosione e semplificano l'adeguamento dell'apparecchiatura esistente ad altri requisiti, ecc.
Queste bobine sono conformi agli standard di sicurezza IEC/CENELEC e alla direttiva europea sulla bassa tensione.

Il connettore DIN deve essere ordinato separatamente (vedere la sezione Accessori per bobine).

Specifica			Doppia frequenza			
Riferimento (senza connettore DIN)			496482			
Gruppo bobine			1.2			
Grado di protezione			**IP65** secondo gli standard IEC/EN 60529 (con connettore DIN)			
Classe di isolamento			F 155°C			
Collegamento elettrico			La bobina viene collegata con un connettore 2P+T secondo EN 175301-803 tipo B.			
Temperatura ambiente			Da -40°C a +50°C L'applicazione è limitata anche dall'intervallo di temperatura della valvola.			
Assorbimento	CC	**Pn** (caldo)	3 W			
		P (freddo) 20°C	-			
	CA	**Pn** (mantenimento)	3 W			
		Attrazione (freddo)	-			
Peso			75 g			
Tensioni "Vn"			V CA/Hz	Codice Tensione	V CC	Codice Tensione
Dal -10% al +10% della Vn			24/50-60 110/50-60 230/50-60 48/50-60	P0 P2 P9 S4	24 V 48 V 110 V	C2 C4 C5

Per ordinare una bobina, utilizzare il riferimento e il codice di tensione, ad esempio: **496482** per **24 V CC** = **496482C2**
Altre tensioni sono disponibili nella tabella dei codici di tensione alla fine della sezione delle bobine.

"Il kit dell'housing è già incluso nel riferimento della bobina, quindi non è necessario ordinarlo separatamente."

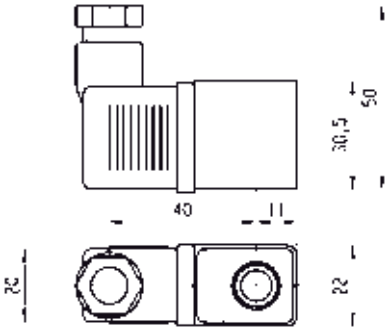

GRUPPO BOBINE

1.3

BOBINE PER COLLEGAMENTO CON CONNETTORE DIN

BOBINE SERIE WB, 22 mm

Queste bobine possono essere montate con tutte le valvole a solenoide Parker che corrispondono al gruppo di bobine indicato. Vedere la colonna "Gruppo bobine" nelle pagine delle valvole.

Queste bobine possono essere montate con la maggior parte degli operatori di tipo 2. Queste bobine vengono realizzate con fili di rame di classe H e stampate in poliestere termoplastico con il 30% di fibra di vetro. Grado di protezione: IP65 con connettore a tre poli DIN 43650A e guarnizione appropriata.

L'incapsulamento in materiale sintetico fornisce un alloggiamento compatto efficace, che offre una protezione totale da polvere, olio, acqua e così via. Queste bobine sono conformi agli standard di sicurezza IEC/CENELEC e alla direttiva europea sulla bassa tensione. Per versione riconosciuta da UL: file UL MH19410.

Il connettore DIN deve essere ordinato separatamente (vedere la sezione Accessori per bobine).

Specifica			Standard		Certificata UL		Potenza elevata	
Rif. (senza connettore DIN)			WB4.5 per CA WB5.0 per CC		WB4.5 UR WB5.0 cURus (solo 24 V CC)		WB8.0	
Gruppo bobine			1.3					
Grado di protezione			**IP65** secondo gli standard IEC/EN 60529 (con connettore DIN e guarnizione)					
Classe di isolamento			F 155°C		F 155°C		F 155°C	
Collegamento elettrico			La bobina viene collegata con un connettore 2P+T secondo EN 175301-803 tipo B.					
Temperatura ambiente			Da -10°C a +50°C L'applicazione è limitata anche dall'intervallo di temperatura della valvola.		Da -10°C a +50°C		Da -10°C a +50°C	
Assorbimento	CC	**P** (freddo) 20°C	5 W		-		-	
	CA	**Pn** (mantenimento)	4.5 W		4.5 W		8 W	
		Attrazione (freddo)	7.5 VA		7.5 VA		11 VA	
Peso			90 g (senza connettore)					
Tensioni "Vn"			WB4.5 V CA/Hz	Codice ordine	WB4.5 UR V CA/Hz	Codice ordine	WB8.0 V CA/Hz	Codice ordine
Dal -10% al +10% della Vn per CA Dal -5% al +10% della Vn per CC			100/50-60 115/50-60 230/50-60 110/50	**302609** **304260** **304262J** **304316**	115/60 208-240/60 24/60	**304087** **304089** **304086**	115/50-60 230/50-60 24/50-60	**302672** **302674** **302670**
			WB5.0 V CC	Codice ordine	WB5.0 cURus V CC	Codice ordine		
			110 V CC 12 V CC	**302660** **302652**	24 V CC	**302654**		

Per ordinare una bobina, utilizzare il numero di ordinazione a 6 cifre. Esempio di codice: WB8.0 per **115/50-60** = **302672**
Altre tensioni sono disponibili nella tabella dei codici di tensione alla fine della sezione delle bobine.

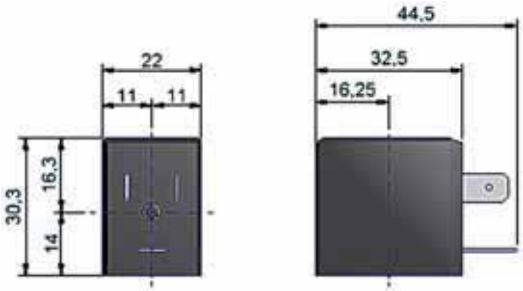

BOBINE PER COLLEGAMENTO CON CONNETTORE DIN

BOBINE SERIE ZB

Queste bobine possono essere montate con tutte le valvole a solenoide Parker che corrispondono al gruppo di bobine indicato.
Vedere la colonna "Gruppo bobine" nelle pagine delle valvole.

Queste bobine vengono realizzate con fili di rame di classe H e stampate in poliestere termoplastico con il 30% di fibra di vetro.
Grado di protezione: IP65 secondo EN 175301-803:2006-A. Connettore a tre poli.

Queste bobine sono conformi agli standard di sicurezza IEC/CENELEC e alla direttiva europea sulla bassa tensione.

Per versione riconosciuta da UL: file UL MH19410.

Il connettore DIN deve essere ordinato separatamente (vedere la sezione Accessori per bobine).

Specifica			Standard	Certificata UL
Riferimento (senza connettore DIN)			ZB09/ZB12	ZB09 solo per CA
Gruppo bobine			20.1	
Grado di protezione			**IP65** secondo gli standard IEC/EN 60529 (con connettore DIN e guarnizione)	
Classe di isolamento			F 155°C	
Collegamento elettrico			La bobina viene collegata con un connettore 2P+T secondo EN 175301-803 tipo A.	
Temperatura ambiente			Da -10°C a +50°C L'applicazione è limitata anche dall'intervallo di temperatura della valvola.	
Assorbimento	CC	P (freddo) 20°C	12 W	
	CA	P (freddo) 20°C	9 W	
		Attrazione (freddo)	25 VA	
Peso			130 g	

Tensioni "Vn"	V CA/Hz	Codice ordine	V CC	Codice ordine	V CA/Hz	Codice ordine
Dal -10% al +10% della Vn per CA Dal -5% al +10% della Vn per CC	ZB09 24/50-60 ZB09 12/50-60 ZB09 230/50-60 ZB09 115/50-60 ZB09 100/50-60 ZB09 240/50-60 ZB09 48/50-60 ZB09 110-120/60 ZB09 380/50-60	**304004** **304002** **304012** **304010** **304009** **304014** **304008** **304011** **304016**	ZB12 12 CC ZB12 24 CC ZB12 110 CC ZB12 48 V CC	**304018** **304020** **304022** **304021**	ZB09 24/60 ZB09 110-120/60 ZB09 208-240/60	**304048** **304011** **304051**

Per ordinare una bobina, utilizzare il numero di ordine a 6 cifre. Esempio di codice: ZB09 24/50-60 = 304004
Altre tensioni sono disponibili nella tabella dei codici di tensione alla fine della sezione delle bobine.

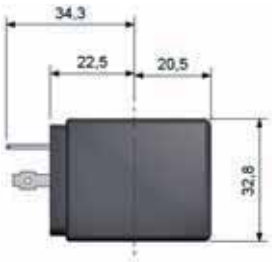

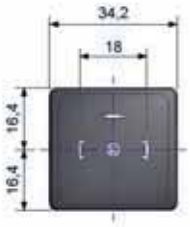

GRUPPO BOBINE

20.2

BOBINE PER COLLEGAMENTO CON CONNETTORE DIN

BOBINE A TEMPERATURA E POTENZA ELEVATE SERIE ZB/ZH

Queste bobine possono essere montate con tutte le valvole a solenoide Parker che corrispondono al gruppo di bobine indicato.
Vedere la colonna "Gruppo bobine" nelle pagine delle valvole.

Queste bobine vengono realizzate con fili di rame di classe H e stampate in poliestere termoplastico con il 30% di fibra di vetro.
Grado di protezione: IP65 secondo EN 175301-803:2006-A. Connettore a tre poli.

Queste bobine sono conformi agli standard di sicurezza IEC/CENELEC e alla direttiva europea sulla bassa tensione.

Il connettore DIN deve essere ordinato separatamente (vedere la sezione Accessori per bobine).

Specifica			Potenza elevata	Temperatura e potenza elevate
Rif. (senza connettore DIN)			ZB14/ZB16	ZH14/ZH16
Gruppo bobine			20.2	
Grado di protezione			**IP65** secondo gli standard IEC/EN 60529 (con connettore DIN e guarnizione)	
Classe di isolamento			H 180°C	
Collegamento elettrico			La bobina viene collegata con un connettore 2P+T secondo EN 175301-803 tipo A.	
Temperatura ambiente			ZB14/ZB16, da -10°C a +50°C	ZH14/ZH16, da -10°C a +80°C
			L'applicazione è limitata anche dall'intervallo di temperatura della valvola.	
Assorbimento	CC	P (freddo) 20°C	16 W	
	CA	P (freddo) 20°C	14 W	
		Attrazione (freddo)	33 VA	
Peso			130 g (senza connettore)	

Tensioni "Vn"	V CA/Hz	Codice ordine	V CC	Codice ordine	V CA/Hz	Codice ordine	V CC	Codice ordine
Dal -10% al +10% della Vn per CA Dal -5% al +10% della Vn per CC	ZB14 12/50-60 ZB14 24/50-60 ZB14 100/50-60 ZB14 115/50-60 ZB14 230/50-60 ZB14 240/50-60 ZB14 380/50-60 ZB14 48/50-60	**304052** **304054** **304084** **304060** **304062** **304064** **304066** **304058**	ZB16 12 CC ZB16 24 CC ZB16 110 CC	**304068** **304070** **304072**	ZH14 24/50-60 ZH14 115/50-60 ZH14 230/50-60	**304100** **304102** **304104**	ZH16 24 CC ZH16 12 CC	**304112** **304110**

Per ordinare una bobina, utilizzare il numero di ordine a 6 cifre. Esempio di codice: ZH16 per **24 V CC= 304112**
Altre tensioni sono disponibili nella tabella dei codici di tensione alla fine della sezione delle bobine.

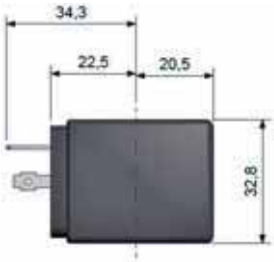

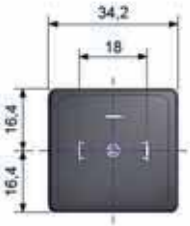

BOBINE PER COLLEGAMENTO CON CONNETTORE DIN

BOBINE SERIE JB

Queste bobine possono essere montate con tutte le valvole a solenoide Parker che corrispondono al gruppo di bobine indicato.
Vedere la colonna "Gruppo bobine" nelle pagine delle valvole.

Queste bobine vengono realizzate con fili di rame di classe H e stampate in poliestere termoplastico con il 30% di fibra di vetro.
Grado di protezione: IP65 secondo EN 175301-803:2006-A. Connettore a tre poli.

Queste bobine sono conformi agli standard di sicurezza IEC/CENELEC e alla direttiva europea sulla bassa tensione.

Il connettore DIN deve essere ordinato separatamente (vedere la sezione Accessori per bobine).

Specifica			Standard			
Rif. (senza connettore DIN)			JB14/JB16			
Gruppo bobine			21.0			
Grado di protezione			**IP65** secondo gli standard IEC/EN 60529 (con connettore DIN e guarnizione)			
Classe di isolamento			F 155°C			
Collegamento elettrico			La bobina viene collegata con un connettore 2P+T secondo EN 175301-803 tipo A.			
Temperatura ambiente			Da -10°C a +50°C L'applicazione è limitata anche dall'intervallo di temperatura della valvola.			
Assorbimento	CC	P (freddo) 20°C	16 W			
	CA	P (freddo) 20°C	14 W			
		Attrazione (freddo)	55 VA			
Peso			130 g (senza connettore)			
Tensioni "Vn"			V CA/Hz	Codice ordine	V CC	Codice ordine
Dal -10% al +10% della Vn per CA Dal -5% al +10% della Vn per CC			JB14 24/50-60 JB14 115/50-60 JB14 230/50-60 JB14 240/50-60	**304900** **304910** **304915** **304920**	JB16 12 CC JB16 24 CC JB16 196 CC	**304945** **304950** **304958**

Per ordinare una bobina, utilizzare il numero di ordine a 6 cifre. Esempio di codice: JB16 per **12 V CC = 304945**
Altre tensioni sono disponibili nella tabella dei codici di tensione alla fine della sezione delle bobine.

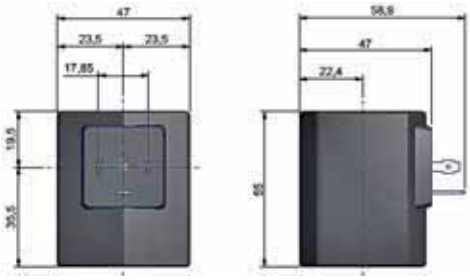

GRUPPO BOBINE

22.0

BOBINE PER COLLEGAMENTO CON CONNETTORE DIN

BOBINE SERIE KT/KH

Queste bobine possono essere montate con tutte le valvole a solenoide Parker che corrispondono al gruppo di bobine indicato.
Vedere la colonna "Gruppo bobine" nelle pagine delle valvole.

Queste bobine vengono realizzate con fili di rame di classe H e stampate in poliestere termoplastico con il 30% di fibra di vetro.
Grado di protezione: IP65 secondo EN 175301-803:2006-A. Connettore a tre poli.

Queste bobine sono conformi agli standard di sicurezza IEC/CENELEC e alla direttiva europea sulla bassa tensione.

Il connettore DIN deve essere ordinato separatamente (vedere la sezione Accessori per bobine).

Specifica			Standard	Temperatura elevata
Rif. (senza connettore DIN)			KT09/KT10	KH09
Gruppo bobine			22.0	
Grado di protezione			**IP65** secondo gli standard IEC/EN 60529 (con connettore DIN e guarnizione)	
Classe di isolamento			F 155°C	H 180°C
Collegamento elettrico			La bobina viene collegata con un connettore 2P+T secondo EN 175301-803 tipo A.	
Temperatura ambiente			Da -10°C a +50°C L'applicazione è limitata anche dall'intervallo di temperatura della valvola.	Da -10°C a +80°C
Assorbimento	CC	**P** (freddo) 20°C	10 W	-
	CA	**P** (freddo) 20°C	9 W	9 W
		Attrazione (freddo)	20 VA	20 VA
Peso			150 g (senza connettore)	

Tensioni "Vn"	V CA/Hz	Codice ordine	V CC	Codice ordine	V CA/Hz	Codice ordine
Dal -10% al +10% della Vn per CA Dal -5% al +10% della Vn per CC	KT09 24/50 KT09 115/50 KT09 208-230/60 KT09-230/50 KT09 240/50	**304621** **304631** **304656** **304639** **304641**	KT10 12 CC KT10 24 CC	**304666** **304971**	KH09 24/50 KH09 230/50	**304746** **304748**

Per ordinare una bobina, utilizzare il numero di ordine a 6 cifre. Esempio di codice: KT10 per **12 V CC = 304666**
Altre tensioni sono disponibili nella tabella dei codici di tensione alla fine della sezione delle bobine.

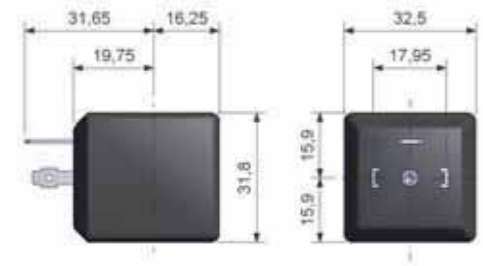

BOBINE PER COLLEGAMENTO CON CONNETTORE DIN

BOBINE SERIE XT09

Queste bobine possono essere montate con tutte le valvole a solenoide Parker che corrispondono al gruppo di bobine indicato.
Vedere la colonna "Gruppo bobine" nelle pagine delle valvole.

Queste bobine vengono realizzate con fili di rame di classe H e stampate in poliestere termoplastico con il 30% di fibra di vetro. Grado di protezione: IP54 con collegamento 2P+T speciale. Connettore speciale con cavo di alimentazione integrato disponibile separatamente.

Queste bobine sono conformi agli standard di sicurezza IEC/CENELEC e alla direttiva europea sulla bassa tensione.

Il connettore DIN deve essere ordinato separatamente (vedere la sezione Accessori per bobine).

Specifica			Settore Riscaldamento	
Rif. (senza connettore DIN)			XT09	
Gruppo bobine			23.0	
Grado di protezione			**IP54** secondo gli standard IEC/EN 60529 (con connettore speciale fornita separatamente)	
Classe di isolamento			F 155°C	
Collegamento elettrico			Connettore 2P+T speciale	
Temperatura ambiente			Da -10°C a +50°C L'applicazione è limitata anche dall'intervallo di temperatura della valvola.	
Assorbimento	CC	P (freddo) 20°C	-	
	CA	P (freddo) 20°C	9 W	
		Attrazione (freddo)	22 VA	
Peso			150 g (senza connettore)	
Tensioni "Vn"			V CA/Hz	Codice ordine
Dal -10% al +10% della Vn per CA			XT09 230/50	**304776**

Per ordinare una bobina, utilizzare il numero di ordine a 6 cifre. Esempio di codice: XT09 230/50 = 304776
Altre tensioni sono disponibili nella tabella dei codici di tensione alla fine della sezione delle bobine.

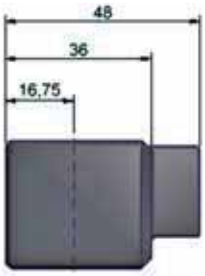

GRUPPO BOBINE

24.0

BOBINE PER COLLEGAMENTO CON CONNETTORE DIN

BOBINE SERIE D4, UL, 32 mm

Queste bobine sono approvate da UL come componente riconosciuto per la classe di isolamento 155 e sono conformi agli standard di sicurezza IEC/CENELEC e alla direttiva europea sulla bassa tensione.

Il connettore DIN deve essere ordinato separatamente (vedere la sezione Accessori per bobine).

Specifica			Certificata UL			
Riferimento (senza connettore DIN)			Serie D4			
Gruppo bobine			24.0			
Grado di protezione			**IP65** secondo gli standard IEC/EN 60529 (con connettore DIN)			
Classe di isolamento			F 155°C			
Collegamento elettrico			La bobina viene collegata con un connettore 2P+T secondo EN 175301-803 tipo A.			
Temperatura ambiente			Da -40°C a +50°C L'applicazione è limitata anche dall'intervallo di temperatura della valvola.			
Assorbimento	CC	**Pn** (caldo)	12 W			
		P (freddo) 20°C	16 W			
	CA	**Pn** (mantenimento)	11 W			
		Attrazione (freddo)	13 VA			
Peso			130 g			
Tensioni "Vn"			V CA/Hz	Codice Tensione	V CC	Codice Tensione
Dal -10% al +10% della Vn per CA Dal -5% al +10% della Vn per CC			24/60 110/50 - 120/60 220/50 - 240/60	D4E D4F D4G	24	D4B

Per ordinare una bobina, utilizzare il numero di ordine a 6 cifre. Esempio di codice: D4 per **24 V CA/60 Hz = D4E**
Altre tensioni sono disponibili nella tabella dei codici di tensione alla fine della sezione delle bobine.

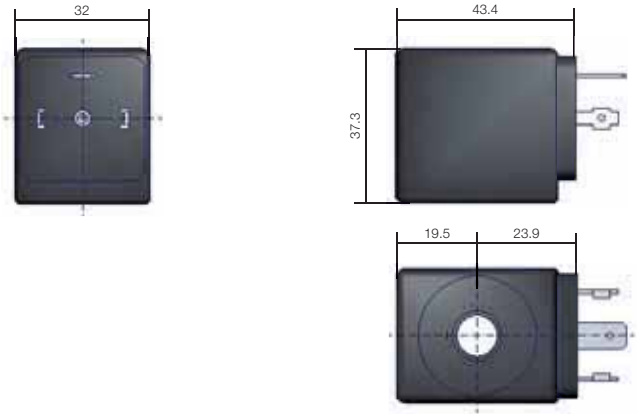

BOBINE PER COLLEGAMENTO CON CONNETTORE DIN

BOBINE SERIE D5, 32 mm

Incapsulamento in materiale sintetico, connettore 2P+T secondo DIN EN 175301-803, tipo A, grado di protezione IP65 da considerare solo con il connettore.

Queste bobine sono conformi agli standard di sicurezza IEC/CENELEC e alla direttiva europea sulla bassa tensione.

Il connettore DIN è incluso.

Specifica			Bobina VDE a monofrequenza			
Riferimento (senza connettore DIN)			Serie D5			
Gruppo bobine			24.0			
Grado di protezione			**IP65** secondo gli standard IEC/EN 60529 (con connettore DIN)			
Classe di isolamento			F 155°C			
Collegamento elettrico			La bobina viene collegata con un connettore 2P+T secondo EN 175301-803 tipo A.			
Temperatura ambiente			Da -40°C a +50°C L'applicazione è limitata anche dall'intervallo di temperatura della valvola.			
Assorbimento	CC	**Pn** (caldo)	9 W			
		P (freddo) 20°C	-			
	CA	**P** (freddo) 20°C	8 W			
		Attrazione (freddo)	40 VA			
Peso			130 g			
Tensioni "Vn"			V CA/Hz	Codice Tensione	V CC	Codice Tensione
Dal -10% al +10% della Vn per CA			24/50 110/50 220-230/50 24/60 230/60 115/60	D5H D5XA5 D5L D5E D5XJ3 D5XK8	24	D5B

Per ordinare una bobina, utilizzare il numero di ordine a 6 cifre. Esempio di codice: D5 per **24 V CA/60 Hz = D5E**
Altre tensioni sono disponibili nella tabella dei codici di tensione alla fine della sezione delle bobine.

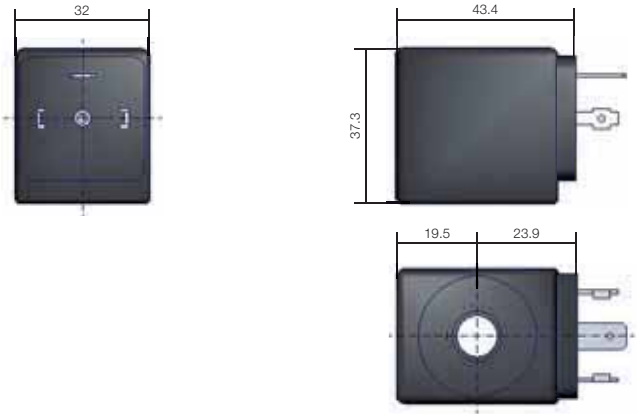

GRUPPO BOBINE

24.0

BOBINE PER COLLEGAMENTO CON CONNETTORE DIN

BOBINE SERIE XS03, 32 mm

Incapsulamento in materiale sintetico, connettore 2P+T secondo DIN EN 175301-803, tipo A, grado di protezione IP65 da considerare solo con il connettore.

Queste bobine sono conformi agli standard di sicurezza IEC/CENELEC e alla direttiva europea sulla bassa tensione.

Il connettore DIN deve essere ordinato separatamente (vedere la sezione Accessori per bobine).

Specifica			Bobina VDE a doppia frequenza	
Riferimento (senza connettore DIN)			Serie XS03	
Gruppo bobine			24.0	
Grado di protezione			**IP65** secondo gli standard IEC/EN 60529 (con connettore DIN)	
Classe di isolamento			F 155°C	
Collegamento elettrico			La bobina viene collegata con un connettore 2P+T secondo EN 175301-803 tipo A.	
Temperatura ambiente			Da -40°C a +50°C L'applicazione è limitata anche dall'intervallo di temperatura della valvola.	
Assorbimento	CC	**Pn** (caldo)	-	
		P (freddo) 20°C	-	
	CA	**Pn** (mantenimento)	9 W	
		Attrazione (freddo)	32 VA	
Peso			130 g	
Tensioni "Vn"			V CA/Hz	Codice Tensione
Dal -10% al +10% della Vn per CA			24/50 - 24/60 110-115/50 - 120/60 220-240/50 - 240/60	XS03M XS03XS5 XS03XS6

Per ordinare una bobina, utilizzare il numero di ordine a 6 cifre. Esempio di codice: XS03 per **24/50-24/60 = XS03M**
Altre tensioni sono disponibili nella tabella dei codici di tensione alla fine della sezione delle bobine.

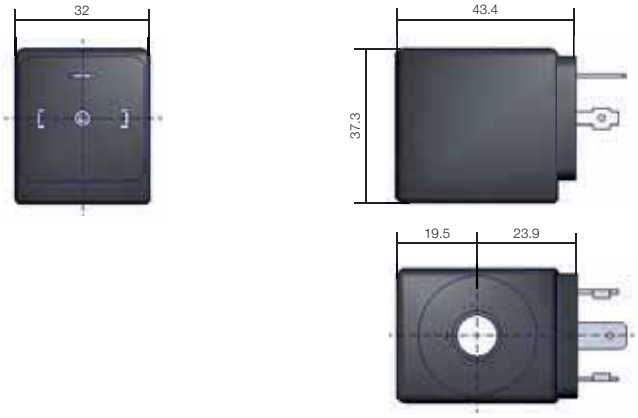

BOBINE PER COLLEGAMENTO CON CONNETTORE DIN

BOBINE OIL & GAS, 37 mm

Queste bobine possono essere montate con tutte le valvole a solenoide Parker che corrispondono al gruppo di bobine indicato.

Vedere la colonna "Gruppo bobine" nelle pagine delle valvole.

Il gruppo incapsulato è composto da una bobina, un circuito ferromagnetico e un collegamento TIPO FASTON.

L'incapsulamento in materiale sintetico fornisce un alloggiamento compatto efficace, che offre una protezione totale da polvere, olio, acqua e così via.

Facili da montare in spazi ristretti, queste bobine forniscono una protezione antiurto e anticorrosione e semplificano l'adeguamento dell'apparecchiatura esistente ad altri requisiti, ecc.

Queste bobine sono conformi agli standard di sicurezza IEC/CENELEC e alla direttiva europea sulla bassa tensione.

Il connettore DIN è incluso.

Specifica			Bobina Oil & Gas, 8 W			
Riferimento (con connettore DIN)			496895			
Gruppo bobine			10.1			
Grado di protezione			**IP65** secondo gli standard CEI/EN 60529 (con connettore DIN)			
Classe di isolamento			H 180°C			
Collegamento elettrico			Con connettore DIN 492459 (CA) o 486586 (CC)			
Temperatura ambiente			Da -40°C a +50°C L'applicazione è limitata anche dall'intervallo di temperatura della valvola.			
Assorbimento	CC	**Pn** (caldo)	8 W			
		P (freddo) 20°C	-			
	CA	**Pn** (mantenimento)	8 W			
		Attrazione (freddo)	-			
Peso			273 g			
Tensioni "Vn"			V CA/Hz	Codice Tensione	V CC	Codice Tensione
Dal -10% al +10% della Vn			230/50-60 110/50-60 24/50-60 48/50-60	P9 P2 P0 S4	24 48 110	C2 C4 C5

Per ordinare una bobina, utilizzare il riferimento e il codice di tensione, ad esempio: **496895** per **24 V CC** = **496895C2**
Altre tensioni sono disponibili nella tabella dei codici di tensione alla fine della sezione delle bobine.
Dado zigrinato incluso.

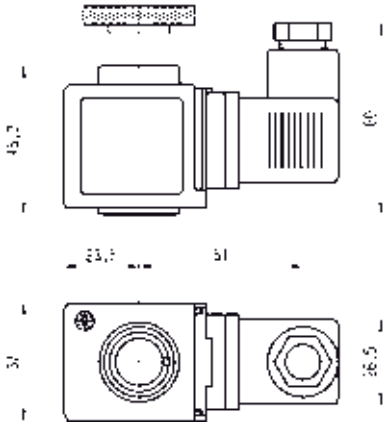

GRUPPO BOBINE

20.1

BOBINE CON CAVI USCENTI

BOBINE SERIE YB, IP67

Queste bobine possono essere montate con tutte le valvole a solenoide Parker che corrispondono al gruppo di bobine indicato.
Vedere la colonna "Gruppo bobine" nelle pagine delle valvole.

Queste bobine vengono realizzate con fili di rame di classe H e stampate in poliestere termoplastico con il 30% di fibra di vetro.
Grado di protezione: IP67. Collegamento elettrico: 2 cavi da 1.000 mm.

Queste bobine sono conformi agli standard di sicurezza IEC/CENELEC e alla direttiva europea sulla bassa tensione.

Per versione riconosciuta da UL: file UL MH19410.

Specifica			Standard				Certificata UL	
Riferimento			YB09/YB12				YB09	
Gruppo bobine			20.1					
Grado di protezione			**IP67** secondo gli standard IEC/EN 60529					
Classe di isolamento			F 155°C					
Collegamento elettrico			La bobina viene collegata con 2 cavi uscenti da 1.000 mm integrati.					
Temperatura ambiente			Da -10°C a +50°C L'applicazione è limitata anche dall'intervallo di temperatura della valvola.					
Assorbimento	CC	**P** (freddo) 20°C	12 W				-	
	CA	**Pn** (mantenimento)	9 W				9 W	
		Attrazione (freddo)	24 VA				24 VA	
Peso			150 g					
Tensioni "Vn"			V CA/Hz	Codice ordine	V CC	Codice ordine	V CA/Hz	Codice ordine
Dal -10% al +10% della Vn per CA Dal -5% al +10% della Vn per CC			YB09 115/50-60 YB09 230/50-60 YB09 24/50-60 YB09 240/50-60	**304396** **304398** **304390** **304400**	YB12 12 CC YB12 24 CC	**304412** **304416**	YB09 24/60 YB09 110-120/60 YB09 208-240/60	**304481** **304488** **304483**

Per ordinare una bobina, utilizzare il numero di ordine a 6 cifre. Esempio di codice: YB09 per 24 VCA/60 Hz = 304481
Altre tensioni sono disponibili nella tabella dei codici di tensione alla fine della sezione delle bobine.

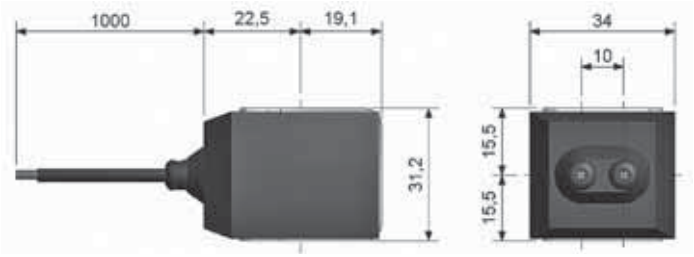

BOBINE CON CAVI USCENTI

BOBINE SERIE LA, 32 mm, IP67

Incapsulamento in materiale sintetico. Grado di protezione: IP67 secondo IEC/EN60529.

Collegamento: 2 cavi da 500 mm.

Queste bobine sono conformi agli standard di sicurezza IEC/CENELEC e alla direttiva europea sulla bassa tensione.

Specifica			Bobina con due cavi uscenti da 500 mm			
Riferimento			Serie LA			
Gruppo bobine			24.0			
Grado di protezione			**IP67** secondo gli standard IEC/EN 60529			
Classe di isolamento			F 155°C			
Temperatura ambiente			Da -10°C a +50°C L'applicazione è limitata anche dall'intervallo di temperatura della valvola.			
Assorbimento	CC	**Pn** (caldo)	9 W			
		P (freddo) 20°C	-			
	CA	**Pn** (mantenimento)	9 W			
		Attrazione (freddo)	32 VA			
Peso			180 g			
Tensioni "Vn"			V CA/Hz	Codice Tensione	V CC	Codice Tensione
Dal -10% al +10% della Vn per CA Dal -5% al +10% della Vn per CC			24/50 - 24/60 110-115/50 - 120/60 220-240/50 - 240/60	LAM LAXS5 LAXS6	24	LAB

Per ordinare una bobina, utilizzare il numero di ordine a 6 cifre. Esempio di codice: serie LA per **24 V CC = LAB**
Altre tensioni sono disponibili nella tabella dei codici di tensione alla fine della sezione delle bobine.

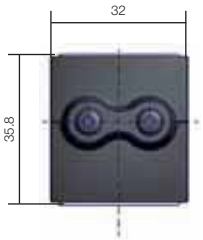

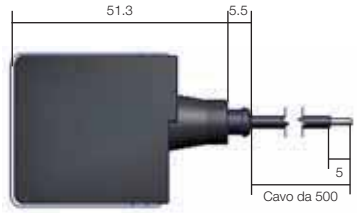

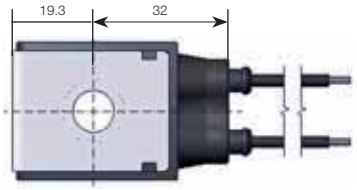

GRUPPO BOBINE

24.0

BOBINE CON
CAVI USCENTI

BOBINE SERIE LB-LC, 32 mm, UL, IP67

Incapsulamento in materiale sintetico. Grado di protezione: IP67 secondo IEC/EN60529.

Collegamento: 2 cavi da 500 mm.

Queste bobine sono approvate da UL come componente riconosciuto per la classe di isolamento 155 e sono conformi agli standard di sicurezza IEC/CENELEC e alla direttiva europea sulla bassa tensione.

Specifica			Bobina UL con due cavi uscenti da 500 mm			
Riferimento			Serie LB-LC			
Gruppo bobine			24.0			
Grado di protezione			**IP67** secondo gli standard IEC/EN 60529			
Classe di isolamento			F 155°C			
Temperatura ambiente			Da -10°C a +50°C L'applicazione è limitata anche dall'intervallo di temperatura della valvola.			
Assorbimento	CC	**Pn** (caldo)	16 W			
		P (freddo) 20°C	-			
	CA	**Pn** (mantenimento)	13-14 W			
		Attrazione (freddo)	40 VA			
Peso			180 g			
Tensioni "Vn"			V CA/Hz	Codice Tensione	V CC	Codice Tensione
Dal -10% al +10% della Vn per CA Dal -5% al +10% della Vn per CC			24/60 110/50 - 120/60 208-240/60 220/50 240/60	LBE LBF LBXU3 LBG	24	LCB

Per ordinare una bobina, utilizzare il numero di ordine a 6 cifre. Esempio di codice: LB-LC per **24 V CC = LCB**
Altre tensioni sono disponibili nella tabella dei codici di tensione alla fine della sezione delle bobine.

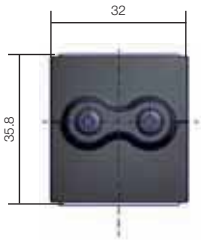

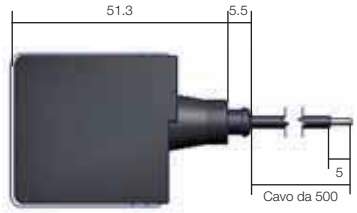

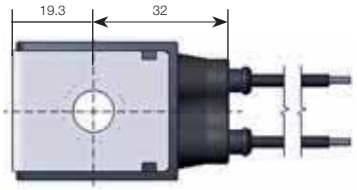

BOBINE, 32 mm, IP67

Queste bobine possono essere montate con tutte le valvole a solenoide Parker che corrispondono al gruppo di bobine indicato.
Vedere la colonna "Gruppo bobine" nelle pagine delle valvole.

Il gruppo incapsulato è composto da una bobina, un circuito ferromagnetico e un collegamento con cavi uscenti.

L'incapsulamento in materiale sintetico fornisce un alloggiamento compatto efficace, che offre una protezione totale da polvere, olio, acqua e così via.
Facili da montare in spazi ristretti, queste bobine forniscono una protezione antiurto e anticorrosione e semplificano l'adeguamento dell'apparecchiatura esistente ad altri requisiti, ecc.
Queste bobine sono conformi agli standard di sicurezza IEC/CENELEC e alla direttiva europea sulla bassa tensione.

Specifica			Bobina con due cavi uscenti da 500 mm			
Riferimento			496081			
Gruppo bobine			2.0/2.1			
Grado di protezione			**IP67** secondo gli standard IEC/EN 60529			
Classe di isolamento			F 155°C			
Temperatura ambiente			Da -40°C a +50°C L'applicazione è limitata anche dall'intervallo di temperatura della valvola.			
Assorbimento	CC	**Pn** (caldo)	9 W			
		P (freddo) 20°C	-			
	CA	**Pn** (mantenimento)	9 W			
		Attrazione (freddo)	32 VA			
Peso			180 g			
Tensioni "Vn"			V CA/Hz	Codice ordine	V CC	Codice ordine
Dal -10% al +10% della Vn per CA Dal -5% al +10% della Vn per CC			24/50 - 24/60 110-115/50 - 120/60 220-240/50 - 240/60	**439816** **439820** **439822**	24 12	**439818** **439814**

Per ordinare una bobina, utilizzare il numero di ordine a 6 cifre. Esempio di codice: 496081 per **24 V CC = 439818**
Altre tensioni sono disponibili nella tabella dei codici di tensione alla fine della sezione delle bobine.

Per le valvole Parker Lucifer® ordinare l'housing Rif. 2995.

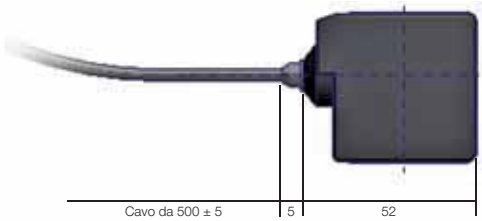

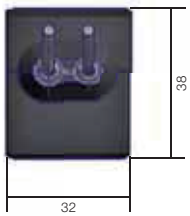

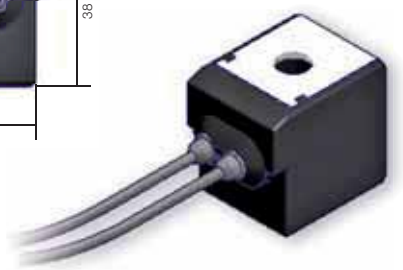

GRUPPO BOBINE

2.0/2.2

BOBINE CON CAVI USCENTI

BOBINE, 32 mm, IP67, UL

Queste bobine possono essere montate con tutte le valvole a solenoide Parker che corrispondono al gruppo di bobine indicato.
Vedere la colonna "Gruppo bobine" nelle pagine delle valvole.

Il gruppo incapsulato è composto da una bobina, un circuito ferromagnetico integrale e un collegamento con cavi uscenti.

L'incapsulamento in materiale sintetico fornisce un alloggiamento compatto efficace, che offre una protezione totale da polvere, olio, acqua e così via.
Facili da montare in spazi ristretti, queste bobine forniscono una protezione antiurto e anticorrosione e semplificano l'adeguamento dell'apparecchiatura esistente ad altri requisiti, ecc.
Queste bobine sono conformi agli standard di sicurezza IEC/CENELEC e alla direttiva europea sulla bassa tensione.

Specifica			Bobina UL con due cavi uscenti da 500 mm			
Riferimento			496082			
Gruppo bobine			2.0/2.2			
Grado di protezione			**IP67** secondo gli standard IEC/EN 60529			
Classe di isolamento			F 155°C			
Temperatura ambiente			Da -40°C a +120°C L'applicazione è limitata anche dall'intervallo di temperatura della valvola.			
Assorbimento	CC	**Pn** (caldo)	16 W			
		P (freddo) 20°C	-			
	CA	**Pn** (mantenimento)	13-14 W			
		Attrazione (freddo)	40 VA			
Peso			180 g			
Tensioni "Vn"			V CA/Hz	Codice ordine	V CC	Codice ordine
Dal -10% al +10% della Vn per CA Dal -5% al +10% della Vn per CC			24/60 110/50 - 120/60 208-240/60 220/50 - 240/60	**439826** **439828** **439824** **439834**	24 12	**439832** **439830**

Per ordinare una bobina, utilizzare il numero di ordine a 6 cifre. Esempio di codice: 496082 per 24 V CC = 439832
Altre tensioni sono disponibili nella tabella dei codici di tensione alla fine della sezione delle bobine.

Per le valvole Parker Lucifer® ordinare l'housing Rif. 2995.

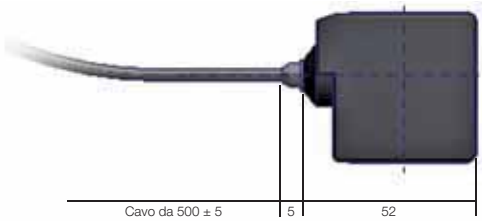

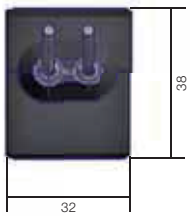

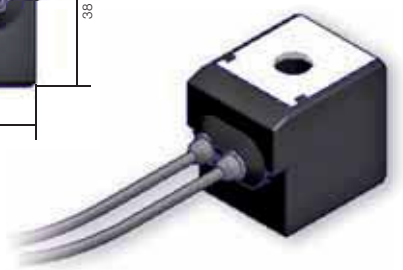

BOBINE CON MORSETTI A VITE

BOBINE STANDARD, 40 mm

Queste bobine possono essere montate con tutte le valvole a solenoide Parker che corrispondono al gruppo di bobine indicato.
Vedere la colonna "Gruppo bobine" nelle pagine delle valvole.

Possono essere montate con tutti gli housing metallici.

L'avvolgimento della bobina è completamente incapsulato in materiale sintetico.

Queste bobine possono essere montate facilmente in spazi ristretti. Il collegamento elettrico viene effettuato con morsetti a vite per cavi fino a 1.5 mm².

Queste bobine sono conformi agli standard di sicurezza IEC/CENELEC e alla direttiva europea sulla bassa tensione.

Specifica			Standard	Doppia frequenza
Riferimento			481000	483520
Gruppo bobine			2.0/2.1	
Classe di isolamento			F 155°C	
Temperatura ambiente			Da -40°C a +50°C L'applicazione è limitata anche dall'intervallo di temperatura della valvola.	
Assorbimento	CC	Pn (caldo)	8 W	-
		P (freddo) 20°C	9 W	-
	CA	Pn (mantenimento)	8 W	9 W
		Attrazione (freddo)	32 VA (9 W)	36 VA (10 W)
Peso			130 g	130 g

Tensioni "Vn"	V CA/Hz	Codice Tensione	V CC	Codice Tensione	V CA/Hz	Codice Tensione
Dal -10% al +10% della Vn (Dal -15% al +5% per le bobine a doppia frequenza con codice di tensione S6 se si utilizzano 240 V/50 Hz)	24/50 48/50 110/50-115/50 220/50-230/50	A2 A4 0A 3D	24 48 110	C2 C4 C5	24/50-60 220-240/50-240/60	P0 S6

Per ordinare una bobina, utilizzare il riferimento e il codice di tensione, ad esempio: **481000** per **24 V CC** = **481000C2**
Altre tensioni sono disponibili nella tabella dei codici di tensione alla fine della sezione delle bobine.

Queste bobine devono essere utilizzate con gli housing appropriati. Di seguito è riportato un esempio.

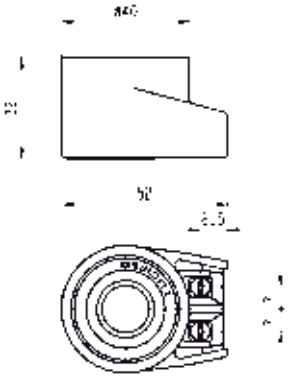

Rif. 4270 - Protezione **IP44** secondo gli standard IEC / EN 60529

Rif. 4538 - Protezione **IP67** secondo gli standard IEC / EN 60529

GRUPPO BOBINE

2.0/2.2 BOBINE CON MORSETTI A VITE

BOBINE A POTENZA ELEVATA, 40 mm

Queste bobine possono essere montate con tutte le valvole a solenoide Parker che corrispondono al gruppo di bobine indicato.
Vedere la colonna "Gruppo bobine" nelle pagine delle valvole.

Possono essere montate con tutti gli housing metallici.

L'avvolgimento della bobina è completamente incapsulato in materiale sintetico.

Queste bobine possono essere montate facilmente in spazi ristretti. Il collegamento elettrico viene effettuato con morsetti a vite per cavi fino a 1.5 mm².

Queste bobine sono conformi agli standard di sicurezza IEC/CENELEC e alla direttiva europea sulla bassa tensione.

Specifica			Potenza elevata	
Riferimento			481044	
Gruppo bobine			2.0/2.2	
Classe di isolamento			F 155°C	
Temperatura ambiente			Da -40°C a +50°C L'applicazione è limitata anche dall'intervallo di temperatura della valvola.	
Assorbimento	CC	Pn (caldo)	-	
		P (freddo) 20°C	-	
	CA	Pn (mantenimento)	14 W	
		Attrazione (freddo)	56 VA (20 W)	
Peso			130 g	
Tensioni "Vn"			V CA/Hz	Codice Tensione
Dal -10% al +10% della Vn			24/50	A2
			110/50	A5
			220/50	A7
			230/50	F4

Per ordinare una bobina, utilizzare il riferimento e il codice di tensione, ad esempio: **481044** per **24 V CA/50 Hz = 481044A2**
Altre tensioni sono disponibili nella tabella dei codici di tensione alla fine della sezione delle bobine.

Queste bobine devono essere utilizzate con gli housing appropriati. Di seguito è riportato un esempio.

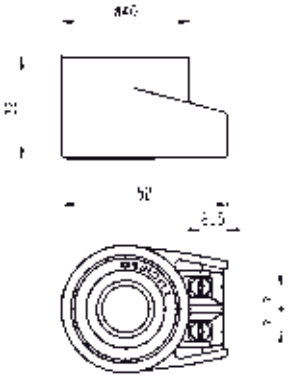

Rif. 4270 - Protezione **IP44** secondo gli standard IEC / EN 60529

Rif. 8520 - Protezione **IP67** secondo gli standard IEC / EN 60529

GRUPPO BOBINE
2.0/2.1 2.2

BOBINE CON MORSETTI A VITE

BOBINE A TEMPERATURA ELEVATA, 40 mm

Queste bobine possono essere montate con tutte le valvole a solenoide Parker che corrispondono al gruppo di bobine indicato.
Vedere la colonna "Gruppo bobine" nelle pagine delle valvole.

Possono essere montate con tutti gli housing metallici.

L'avvolgimento della bobina è completamente incapsulato in materiale sintetico.

Queste bobine possono essere montate facilmente in spazi ristretti. Il collegamento elettrico viene effettuato con morsetti a vite per cavi fino a 1.5 mm².

Queste bobine sono conformi agli standard di sicurezza IEC/CENELEC e alla direttiva europea sulla bassa tensione.

Specifica			Temperatura elevata	Temperatura e potenza elevate
Riferimento			485100	486265
Gruppo bobine			2.0/2.1	2.0/2.2
Classe di isolamento			H 180°C	
Temperatura ambiente			Da -40°C a +50°C L'applicazione è limitata anche dall'intervallo di temperatura della valvola.	
Assorbimento	CC	Pn (caldo)	8 W	14 W
		P (freddo) 20°C	9 W	21 W
	CA	Pn (mantenimento)	8 W	14 W
		Attrazione (freddo)	32 VA (9 W)	56 VA (20 W)
Peso			140 g	

Tensioni "Vn"	V CA/Hz	Codice Tensione	V CC	Codice Tensione	V CA/Hz	Codice Tensione	V CC	Codice Tensione
Dal -10% al +10% della Vn	24/50 220/50-230/50 380/50-440/60	A2 3D 5P	24	C2	24/50 110/50 220/50 230/50	A2 A5 A7 F4	12 24 48	C1 C2 C4

Per ordinare una bobina, utilizzare il riferimento e il codice di tensione, ad esempio: **485100** per **24 V CA/50 Hz** = **485100A2**
Altre tensioni sono disponibili nella tabella dei codici di tensione alla fine della sezione delle bobine.

Queste bobine devono essere utilizzate con gli housing appropriati. Di seguito è riportato un esempio.

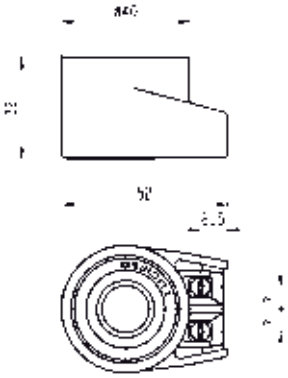

Rif. 4270 - Protezione **IP44**

Rif. 8520 - Protezione **IP674**

GRUPPO BOBINE

14.1

BOBINE CON
MORSETTI A VITE

BOBINE A TEMPERATURA E POTENZA ELEVATE PER BRUCIATORI A OLIO, 40 mm

Queste bobine possono essere montate con tutte le valvole a solenoide Parker che corrispondono al gruppo di bobine indicato.
Vedere la colonna "Gruppo bobine" nelle pagine delle valvole.

Possono essere montate con tutti gli housing metallici.

L'avvolgimento della bobina è completamente incapsulato in materiale sintetico.

Queste bobine possono essere montate facilmente in spazi ristretti. Il collegamento elettrico viene effettuato con morsetti a vite per cavi fino a 1.5 mm².

Queste bobine sono conformi agli standard di sicurezza IEC/CENELEC e alla direttiva europea sulla bassa tensione.
Questa gamma di bobine viene utilizzata solo nelle applicazioni di sicurezza secondo DIN/EN/ISO 23551-1:2009-10 (bruciatori a olio).

Specifica			Temperatura e potenza elevate	
Riferimento			483824	
Gruppo bobine			14.1	
Classe di isolamento			H 180°C	
Temperatura ambiente			Da -40°C a +50°C L'applicazione è limitata anche dall'intervallo di temperatura della valvola.	
Assorbimento	CC	Pn (caldo)	19 W	
		P (freddo) 20°C	19 W	
	CA	Pn (mantenimento)	19 W	
		Attrazione (freddo)	56 VA (20 W)	
Peso			130 g	
Tensioni "Vn"			V CA/Hz	Codice Tensione
Dal -10% al +10% della Vn			120/50	A6
			240/50	A8
			110/60	B5
			220/60	B7
			58/50-60/60	T6
			55/60	4J

Per ordinare una bobina, utilizzare il riferimento e il codice di tensione, ad esempio: **483824** per **120/50** = **483824A6**
Altre tensioni sono disponibili nella tabella dei codici di tensione alla fine della sezione delle bobine.

Queste bobine devono essere utilizzate con gli housing appropriati: Rif: 8760.24 e Rif: 8520.23.

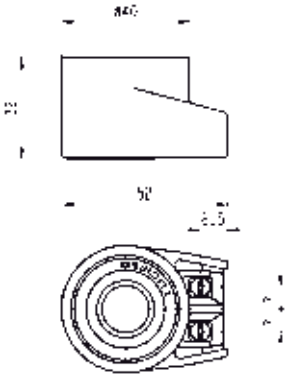

Rif. 8760.24

Rif. 8520.23

BOBINE A TEMPERATURA E POTENZA ELEVATE PER BRUCIATORI A OLIO, 40 mm

Queste bobine possono essere montate con tutte le valvole a solenoide Parker che corrispondono al gruppo di bobine indicato.
Vedere la colonna "Gruppo bobine" nelle pagine delle valvole.

Possono essere montate con tutti gli housing metallici.

L'avvolgimento della bobina è completamente incapsulato in materiale sintetico.

Queste bobine possono essere montate facilmente in spazi ristretti. Il collegamento elettrico viene effettuato con morsetti a vite per cavi fino a 1.5 mm².

Queste bobine sono conformi agli standard di sicurezza IEC/CENELEC e alla direttiva europea sulla bassa tensione.
Questa gamma di bobine viene utilizzata solo nelle applicazioni di sicurezza secondo DIN/EN/ISO 23551-1:2009-10 (bruciatori a olio).

Specifica			Temperatura e potenza elevate	
Riferimento			483541	
Gruppo bobine			14.3	
Classe di isolamento			H 180°C	
Temperatura ambiente			Da -40°C a +50°C L'applicazione è limitata anche dall'intervallo di temperatura della valvola.	
Assorbimento	CC	Pn (caldo)	20 W	
		P (freddo) 20°C	20 W	
	CA	Pn (mantenimento)	20 W	
		Attrazione (freddo)	56 VA (20 W)	
Peso			130 g	
Tensioni "Vn"			V CA/Hz	Codice Tensione
Dal -10% al +10% della Vn			120/50	A6
			240/50	A8
			110/60	B5
			220/60	B7
			58/50-60/60	T6
			55/60	4J

Per ordinare una bobina, utilizzare il riferimento e il codice di tensione, ad esempio: **483541** per **120/50** = **483541A6**
Altre tensioni sono disponibili nella tabella dei codici di tensione alla fine della sezione delle bobine.

Queste bobine devono essere utilizzate con gli housing appropriati: Rif: 8760.24 e Rif: 8520.23.

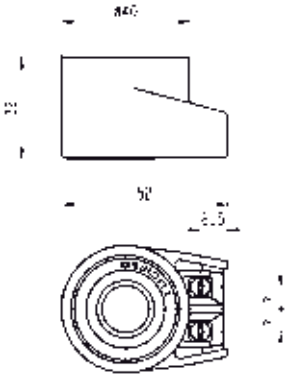

Rif. 8760.24

Rif. 8520.23

GRUPPO BOBINE

2.0/2.1

BOBINE CON
MORSETTI A VITE

BOBINE A DOPPIA FREQUENZA, 40 mm, CLASSE H

Queste bobine possono essere montate con tutte le valvole a solenoide Parker che corrispondono al gruppo di bobine indicato.
Vedere la colonna "Gruppo bobine" nelle pagine delle valvole.

Possono essere montate con tutti gli housing metallici.

L'avvolgimento della bobina è completamente incapsulato in materiale sintetico.

Queste bobine possono essere montate facilmente in spazi ristretti. Il collegamento elettrico viene effettuato con morsetti a vite per cavi fino a 1.5 mm².

Queste bobine sono conformi agli standard di sicurezza IEC/CENELEC e alla direttiva europea sulla bassa tensione.

Specifica			Doppia frequenza 100 V - 200 V	
Riferimento			488553	
Gruppo bobine			2.0/2.1	
Classe di isolamento			H 180°C	
Temperatura ambiente			Da -40°C a +50°C L'applicazione è limitata anche dall'intervallo di temperatura della valvola.	
Assorbimento	CC	Pn (caldo)	-	
		P (freddo) 20°C	-	
	CA	Pn (mantenimento)	9 W	
		Attrazione (freddo)	-	
Peso			130 g	
Tensioni "Vn"			V CA/Hz	Codice Tensione
Dal -10% al +10% della Vn			100/50-60 200/50-60	P1 P6

Per ordinare una bobina, utilizzare il riferimento e il codice di tensione, ad esempio: **488553** per **110/50-60** = **488553P1**
Altre tensioni sono disponibili nella tabella dei codici di tensione alla fine della sezione delle bobine.

Queste bobine devono essere utilizzate con gli housing appropriati. Di seguito è riportato un esempio.

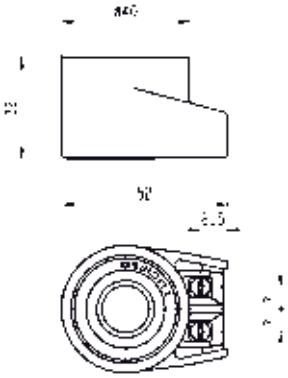

Rif. 4270 - Protezione **IP44**

Rif. 2985 - Protezione **IP54**

BOBINE BISTABILI PER APPLICAZIONI A IMPULSI, 40 mm

Queste bobine possono essere montate con tutte le valvole a solenoide Parker che corrispondono al gruppo di bobine indicato.

Vedere la colonna "Gruppo bobine" nelle pagine delle valvole.

Queste bobine sono state specificamente progettate per le valvole a solenoide bistabili (o a impulsi o a sgancio elettromagnetico) Lucifer® per le applicazioni di riscaldamento.

Possono essere montate solo con l'housing metallico Lucifer® 4269.
L'avvolgimento della bobina è completamente incapsulato in materiale sintetico.
Queste bobine possono essere montate facilmente in spazi ristretti. Il collegamento elettrico viene effettuato con morsetti a vite per cavi fino a 1.5 mm².

Queste bobine sono conformi agli standard di sicurezza IEC/CENELEC e alla direttiva europea sulla bassa tensione.

Specifica			Bistabile (a impulsi)			
Riferimento			484990		485400	
Gruppo bobine			4.0			
Classe di isolamento			F 155°C			
Temperatura ambiente			Da -40°C a +50°C L'applicazione è limitata anche dall'intervallo di temperatura della valvola.			
Lunghezza impulsi			Accensione (morsetti A-B): 50 ms min Spegnimento (morsetti A-C): 35 ms min			
Assorbimento	CC	Attrazione (caldo)	-		13 W	
		Attrazione (freddo)	-		19 W	
		Sgancio (caldo)	-		8 W	
		Sgancio (freddo)	-		10 W	
	CA	Attrazione (caldo)	11 W		-	
		Attrazione (freddo)	17 W		-	
		Sgancio (caldo)	4 W		-	
		Sgancio (freddo)	7 W		-	
Peso			150 g			
Tensioni "Vn"			V CA/Hz	Codice Tensione	V CC	Codice Tensione
Dal -10% al +10% della Vn			24/50-24/60 48/50-48/60 110-115/50-115/60 220-230/50-60	P0 S4 1P 3P	24 48 110	C2 C4 C5

Per ordinare una bobina, utilizzare il riferimento e il codice di tensione, ad esempio: **485400** per **24 V CC = 485400C2**
Altre tensioni sono disponibili nella tabella dei codici di tensione alla fine della sezione delle bobine.

Queste bobine devono essere utilizzate con gli housing appropriati. Di seguito è riportato un esempio.

DIAGRAMMA

Corrente alternata

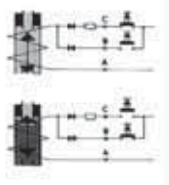

Corrente continua

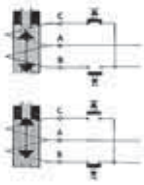

Solo un impulso elettrico trasmesso ai morsetti A-C inverte il campo magnetico. Questo campo magnetico demagnetizza il magnete reversibile in modo da consentire alla molla di richiamo di riportare il nucleo nella posizione iniziale e chiudere la valvola.

Rif. 4269 - Protezione **IP44**

Rif. 4538 - Protezione **IP674**

GRUPPO BOBINE

13.0

BOBINE CON CONNETTORI
DIN ISO

BOBINE 12 V - 24 V APPLICAZIONE SETTORE TRASPORTI, 32 mm

Queste bobine possono essere montate con tutte le valvole a solenoide Parker che corrispondono al gruppo di bobine indicato.

Vedere la colonna "Gruppo bobine" nelle pagine delle valvole.

Queste bobine sono state specificamente progettate per le valvole a solenoide Lucifer® per le applicazioni Settore Trasporti.
Possono essere montate con l'housing Lucifer® 2161 standard o con un housing personalizzato.

L'avvolgimento della bobina è completamente incapsulato in epossidica. Facilità di montaggio e smontaggio in spazi ristretti. Accoppiamento gira e blocca a baionetta per una connessione antivibrazione stretta.

Queste bobine sono conformi agli standard di sicurezza IEC/CENELEC e alla direttiva europea sulla bassa tensione.

Specifica			Applicazioni Settore Trasporti			
Riferimento			496193 con diodo		495294 senza diode	
Gruppo bobine			13.0			
Grado di protezione			**IP69K** per DIN 400050 parte 9			
Temperatura ambiente			Da - 40°C a +120°C L'applicazione è limitata anche dall'intervallo di temperatura e dal ciclo di funzionamento della valvola.			
Classe di isolamento			F 155°C			
Collegamento elettrico			ISO 15170-A1-2.3-Sn/K2		DIN 72585-A3-2.1	
Assorbimento	CC	**Pn** (caldo)	9 W			
		P (freddo) 20°C	-			
	CA	**Pn** (mantenimento)	-			
		Attrazione (freddo)	-			
Peso			147 g			
Tensioni "Vn"			V CC	Codice Tensione	V CC	Codice Tensione
Dal -30% al +30% della Vn			12 24	C1 C2	12 24	C1 C2

Per ordinare una bobina, utilizzare il riferimento e il codice di tensione, ad esempio: **496193** per **24 V CC** = **496193C2**

Queste bobine devono essere utilizzate con gli housing appropriati: Rif.2161.

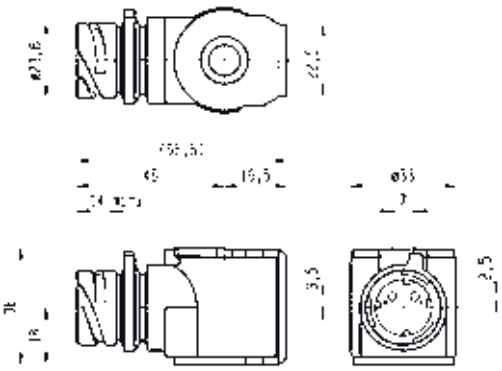

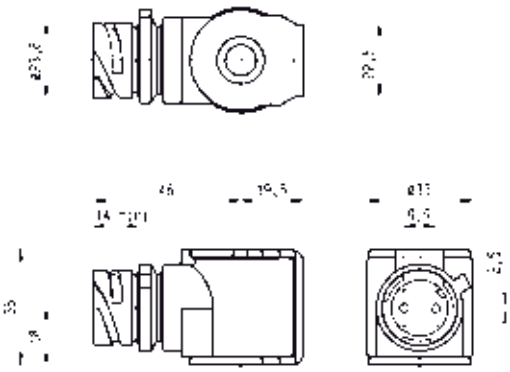

SOMMARIO

INTRODUZIONE

Indice per componenti elettrici a prova di esplosione 442
Elenco dei gruppi di bobine 443

BOBINE

Bobine per collegamento con connettore DIN 446
Bobine con cavi uscenti 469
Bobine con morsetto a vite 474
Bobine con connettore DIN ISO 481

COMPONENTI ELETTRICI A PROVA DI ESPLOSIONE

Livello di protezione "nAc nCc" 484
Livello di protezione "db" 492
Livello di protezione "mb" 494
Livello di protezione "db mb" 499
Livello di protezione "eb" 504
Livello di protezione "eb mb" 505
Livello di protezione "ia" 508

HOUSING 518

ACCESSORI PER BOBINE 522

AMBIENTI ESPLOSIVI 524

APPENDICI DELLE BOBINE

Diagramma di guida per barriere IS 534

BOBINE A BASSA POTENZA, 22 mm

Queste bobine possono essere montate con tutte le valvole a solenoide ATEX Parker che corrispondono al gruppo di bobine indicato.

Vedere la colonna "Gruppo bobine" nelle pagine delle valvole.

Applicazione
Controllo delle valvole a solenoide in aree pericolose in cui è richiesta la protezione a prova di esplosione Ex nAc nCc IIC T5.

Vantaggi
L'incapsulamento in materiale sintetico della bobina fornisce un alloggiamento compatto efficace, che offre una protezione totale da polvere, olio, acqua e così via. Dimensioni ridotte per facilità di montaggio in spazi ristretti.

Riferimento			495865			
Certificato			LCIE 05 ATEX 6003 X			
Gruppo bobine			1.1			
Tipo di protezione		Gas	II 3 G - Ex nAc nCc IIC T5			
		Polvere	II 3 D - Ex tc IIIC - T95°C			
Grado di protezione			**IP65** secondo gli standard IEC/EN 60529 (con connettore)			
Temperatura ambiente			Da -40°C a +50°C L'applicazione è limitata anche dall'intervallo di temperatura della valvola.			
Classe di isolamento			F 155°C			
Collegamento elettrico			Bobine con collegamento 2P+T, quando montate insieme alla connettore PG 9 fornita (in dotazione con la bobina)			
Assorbimento	CC	**Pn** (caldo)	2.5 W			
		P (freddo) 20°C	3 W			
	CA	**Pn** (mantenimento)	2 W			
		Attrazione (freddo)	5.7 VA (2.5 W)			
Peso			120 g			
Tensioni "Vn"			V CA/Hz	Codice Tensione	V CC	Codice Tensione
Dal -10% al +10% della Vn			24/50 48/50 110/50-115/50 220/50-230/50	A2 A4 0A 3D	24 48	C2 C4

Per ordinare una bobina, utilizzare il riferimento e il codice di tensione, ad esempio: **495865** per **24 V CC** = **495865C2**

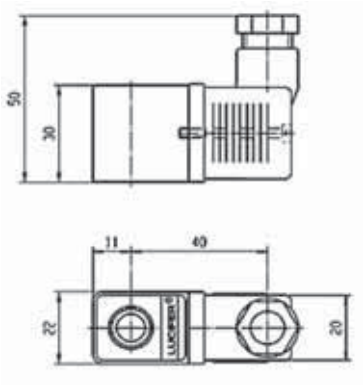

GRUPPO BOBINE

1.2

BOBINE
"nAC NCC"

BOBINE A DOPPIA FREQUENZA, 22 mm

Queste bobine possono essere montate con tutte le valvole a solenoide ATEX Parker che corrispondono al gruppo di bobine indicato.

Vedere la colonna "Gruppo bobine" nelle pagine delle valvole.

Applicazione
Controllo delle valvole a solenoide in aree pericolose in cui è richiesta la protezione a prova di esplosione Ex nAc nCc IIC T5.

Vantaggi
L'incapsulamento in materiale sintetico della bobina fornisce un alloggiamento compatto efficace, che offre una protezione totale da polvere, olio, acqua e così via. Dimensioni ridotte per facilità di montaggio in spazi ristretti.

Specifica			Doppia frequenza			
Riferimento			496637			
Certificato			ATEX			
Gruppo bobine			1.2			
Tipo di protezione		Gas	-			
		Polvere	II 3 D - Ex tc IIIC - T95°C			
Grado di protezione			**IP65** secondo gli standard IEC/EN 60529 (con connettore)			
Temperatura ambiente			Da -40°C a +50°C L'applicazione è limitata anche dall'intervallo di temperatura della valvola.			
Classe di isolamento			F 155°C			
Assorbimento	CC	**Pn** (caldo)	3 W			
		P (freddo) 20°C	-			
	CA	**Pn** (mantenimento)	3 W			
		Attrazione (freddo)	5.7 VA (2.5 W)			
Peso			75 g			
Tensioni "Vn"			V CA/Hz	Codice Tensione	V CC	Codice Tensione
Dal -10% al +10% della Vn			24/50-60 110/50-60 230/50-60 48/50-60	P0 P2 P9 S4	24 V 48 V 110 V	C2 C4 C5

Per ordinare una bobina, utilizzare il riferimento e il codice di tensione, ad esempio: **496637** per **24 V CC** = **496637C2**

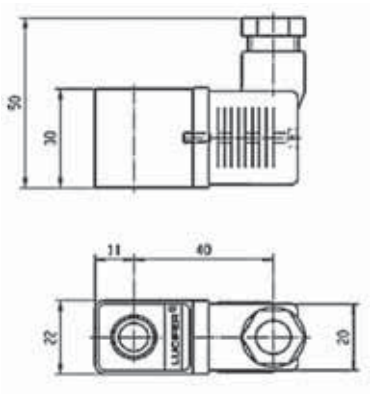

BOBINE, 32 mm

Queste bobine possono essere montate con tutte le valvole a solenoide ATEX Parker che corrispondono al gruppo di bobine indicato.
Vedere la colonna "Gruppo bobine" nelle pagine delle valvole.

Applicazione: controllo delle valvole a solenoide in aree pericolose in cui è richiesta la protezione a prova di esplosione Ex nAc nCc IIC da T3 a T6.
Facili da montare in spazi ristretti, forniscono una protezione antiurto e anticorrosione e semplificano l'adeguamento dell'apparecchiatura esistente ad altri requisiti, ecc.
Queste bobine sono conformi agli standard di sicurezza IEC/CENELEC e alla direttiva europea sulla bassa tensione.

Dimensioni ridotte per facilità di montaggio in spazi ristretti.

Riferimento			495870	496110
Certificato			LCIE 05 ATEX 6003 X	
Gruppo bobine			2.0/2.1	
Tipo di protezione	Gas		II 3 G - Ex nAc nCc IIC T3/T4	II 3 G - Ex nAc nCc IIC T3/T4
	Polvere		II 3 D - Ex tc IIIC - T195°C/T130°C	II 3 D - Ex tc IIIC - T195°C/T130°C
Grado di protezione			**IP65** secondo gli standard IEC/EN 60529 (con connettore)	
Classe di isolamento			F 155°C	
Ciclo di funzionamento			100%	
Temperatura ambiente			Da -40°C a +50°C L'applicazione è limitata anche dall'intervallo di temperatura della valvola.	
Assorbimento	CC	**Pn** (caldo)	9 W	-
		P (freddo) 20°C	12 W	-
	CA	**Pn** (mantenimento)	8 W	9 W
		Attrazione (freddo)	26 VA (9 W)	32 VA (10 W)
Peso			150 g	

Tensioni "Vn"	V CA/Hz	Codice Tensione	V CC	Codice Tensione	V CA/Hz	Codice Tensione
Dal -10% al +10% della Vn	24/50	A2	24	C2	24/50-60	P0
	48/50	A4	48	C4	48/50-60	S4
	110/50	A5	110	C5	110/50-60	S5
	220-230/50	3D			220/50-60	S6

Per ordinare una bobina, utilizzare il riferimento e il codice di tensione, ad esempio: **495870** per **24 V CC** = **495870C2**

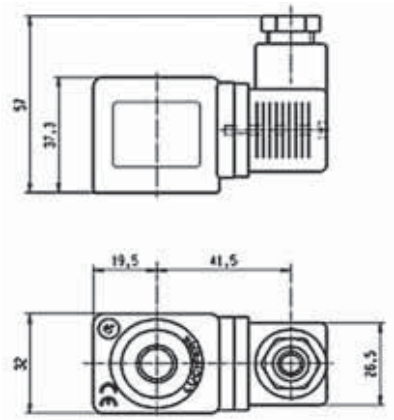

GRUPPO BOBINE

6.0

BOBINE
"nAC NCC"

BOBINE A BASSA POTENZA, 32 mm

Queste bobine possono essere montate con tutte le valvole a solenoide ATEX Parker che corrispondono al gruppo di bobine indicato.
Vedere la colonna "Gruppo bobine" nelle pagine delle valvole.

Applicazione: controllo delle valvole a solenoide in aree pericolose in cui è richiesta la protezione a prova di esplosione Ex nAc nCc IIC da T5 a T6.
Facili da montare in spazi ristretti, forniscono una protezione antiurto e anticorrosione e semplificano l'adeguamento dell'apparecchiatura esistente ad altri requisiti, ecc.
Queste bobine sono conformi agli standard di sicurezza IEC/CENELEC e alla direttiva europea sulla bassa tensione.

Dimensioni ridotte per facilità di montaggio in spazi ristretti.

Riferimento			496125	
Certificato			LCIE 05 ATEX 6003 X	
Gruppo bobine			6.0	
Tipo di protezione	Gas		II 3 G - Ex nAc nCc IIC T5/T6	
	Polvere		II 3 D - Ex tc IIIC - T80°C/T95°C	
Grado di protezione			**IP65** secondo gli standard IEC/EN 60529	
Classe di isolamento			F 155°C	
Ciclo di funzionamento			100%	
Temperatura ambiente			Da -40°C a +50°C L'applicazione è limitata anche dall'intervallo di temperatura della valvola.	
Assorbimento	CC	**Pn** (caldo)	1.6 W	
		P (freddo) 20°C	2.1 W	
	CA	**Pn** (mantenimento)	-	
		Attrazione (freddo)	-	
Peso			150 g	
Tensioni "Vn"			V CC	Codice Tensione
Dal -10% al +10% della Vn			24 48 110	C2 C4 C5

Per ordinare una bobina, utilizzare il riferimento e il codice di tensione, ad esempio: **496125** per **24 V CC** = **496125C2**

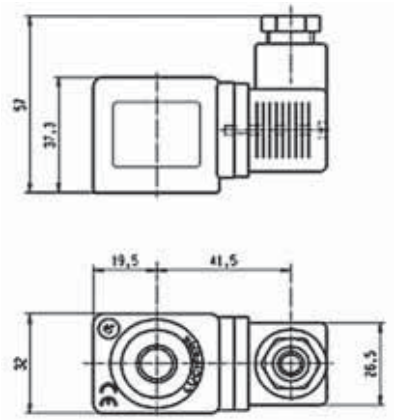

BOBINE, 32 mm

Queste bobine possono essere montate con tutte le valvole a solenoide ATEX Parker che corrispondono al gruppo di bobine indicato.
Vedere la colonna "Gruppo bobine" nelle pagine delle valvole.

Applicazione: controllo delle valvole a solenoide in aree pericolose in cui è richiesta la protezione a prova di esplosione Ex nAc nCc IIC da T3 a T6.
Facili da montare in spazi ristretti, forniscono una protezione antiurto e anticorrosione e semplificano l'adeguamento dell'apparecchiatura esistente ad altri requisiti, ecc.
Queste bobine sono conformi agli standard di sicurezza IEC/CENELEC e alla direttiva europea sulla bassa tensione.

Dimensioni ridotte per facilità di montaggio in spazi ristretti.

Specifica			Bobina "nAc nCc", 32 mm			
Riferimento			495875			
Certificato			LCIE 05 ATEX 6003 X			
Gruppo bobine			2.0/2.1			
Tipo di protezione	Gas		II 3 G - Ex nAc nCc IIC T3/T4			
	Polvere		II 3 D - Ex tc IIIC - T195°C/T130°C			
Grado di protezione			**IP65** secondo gli standard IEC/EN 60529 (con connettore)			
Classe di isolamento			F 155°C			
Ciclo di funzionamento			100%			
Temperatura ambiente			Da -40°C a +50°C L'applicazione è limitata anche dall'intervallo di temperatura della valvola.			
Assorbimento	CC	**Pn** (caldo)	7 W			
		P (freddo) 20°C	-			
	CA	**Pn** (mantenimento)	6 W			
		Attrazione (freddo)	-			
Peso			180 g			
Tensioni "Vn"			V CA/Hz	Codice Tensione	V CC	Codice Tensione
Dal -10% al +10% della Vn			220-230/50	3D	24	C2

Per ordinare una bobina, utilizzare il riferimento e il codice di tensione, ad esempio: **495875** per **24 V CC** = **495875C2**

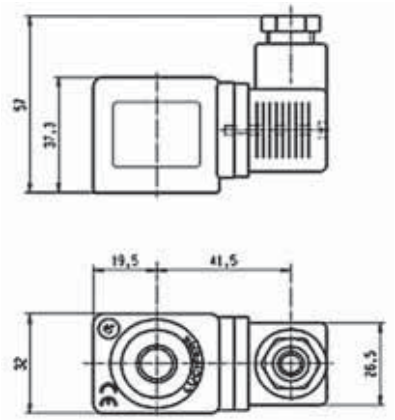

GRUPPO BOBINE

2.0/2.2

BOBINE NON INCAPSULATE
"**nAC NCC**"

BOBINE, 32 mm

Queste bobine possono essere montate con tutte le valvole a solenoide ATEX Parker che corrispondono al gruppo di bobine indicato.
Vedere la colonna "Gruppo bobine" nelle pagine delle valvole.

Applicazione: controllo delle valvole a solenoide in aree pericolose in cui è richiesta la protezione a prova di esplosione Ex nAc nCc IIC da T3 a T6.
Facili da montare in spazi ristretti, forniscono una protezione antiurto e anticorrosione e semplificano l'adeguamento dell'apparecchiatura esistente ad altri requisiti, ecc.
Queste bobine sono conformi agli standard di sicurezza IEC/CENELEC e alla direttiva europea sulla bassa tensione.

Dimensioni ridotte per facilità di montaggio in spazi ristretti.

Specifica			Bobina "nAc nCc", 32 mm			
Riferimento			495880			
Certificato			LCIE 05 ATEX 6003X			
Gruppo bobine			2.0/2.2			
Tipo di protezione	Gas		II 3 G - Ex nAc nCc IIC T3 65°C			
	Polvere		II 3D - Ex tc IIIC - T195°C			
Grado di protezione			**IP65** secondo gli standard IEC/EN 60529 (con connettore)			
Classe di isolamento			H 180°C			
Ciclo di funzionamento			100%			
Temperatura ambiente			Da -40°C a +50°C L'applicazione è limitata anche dall'intervallo di temperatura della valvola.			
Assorbimento	CC	**Pn** (caldo)	14 W			
		P (freddo) 20°C	-			
	CA	**Pn** (mantenimento)	14 W			
		Attrazione (freddo)	-			
Peso			180 g			
Tensioni "Vn"			V CA/Hz	Codice Tensione	V CC	Codice Tensione
Dal -10% al +10% della Vn			24/50 110/50 230/50	A2 A5 F4	24	C2

Per ordinare una bobina, utilizzare il riferimento e il codice di tensione, ad esempio: **495880** per **24 V CC** = **495880C2**

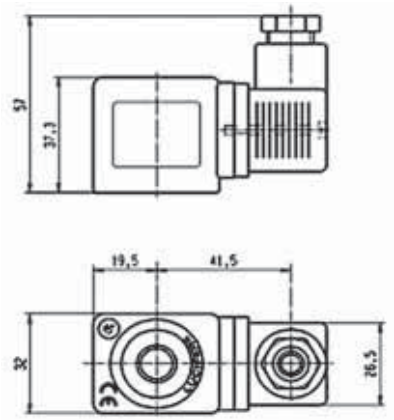

495915 - BOBINE, 50 mm

Queste bobine possono essere montate con tutte le valvole a solenoide ATEX Parker che corrispondono al gruppo di bobine indicato.
Vedere la colonna "Gruppo bobine" nelle pagine delle valvole.

Applicazione: controllo delle valvole a solenoide in aree pericolose in cui è richiesta la protezione a prova di esplosione Ex nAc nCc IIC T3.

Vantaggi: housing orientabile a 360°, acciaio galvanizzato con morsetti a vite interni ed esterni per la messa a terra.

Dimensioni ridotte per facilità di montaggio in spazi ristretti. Semplificano l'adeguamento dell'apparecchiatura esistente ai requisiti delle aree pericolose.

Riferimento			495915			
Certificato			LCIE 05 ATEX 6010 X			
Gruppo bobine			4.0			
Tipo di protezione		Gas	II 3 G - Ex nAc nCc IIC T3			
		Polvere	II 3 D - Ex tc IIIC - T195°C			
Temperatura ambiente			Da -40°C a +65°C L'applicazione è limitata anche dall'intervallo di temperatura della valvola.			
Classe di isolamento			F 155°C			
Collegamento elettrico			Tramite pressacavo speciale M20 x 1.5, "Ex eb" sui morsetti a vite per cavi fino a 1.5 mm². I cavi con un diametro esterno compreso tra 6.5 mm e 13.5 mm possono essere sigillati con il pressacavo in gomma con anelli di tenuta elastici fornito.			
Assorbimento	CA	Attrazione (caldo)	11 W	-		
		Attrazione (freddo) 20°C	17 W	-		
		Sgancio (caldo)	4 W	-		
		Sgancio (freddo) 20°C	7 W	-		
	CC	Attrazione (caldo)	-	13 W		
		Attrazione (freddo) 20°C	-	19 W		
		Sgancio (caldo)	-	8 W		
		Sgancio (freddo) 20°C	-	10 W		
Peso			320 g			
Ciclo di funzionamento			Solenoide a funzionamento continuo (ciclo di funzionamento: 100%)			
Tensioni "Vn"			V CA/Hz	Codice Tensione	V CC	Codice Tensione
Dal -10% al +10% della Vn			110-115/50-60	1P	24	C2
			220-230/50-60	3P	48	C4
			48/50-60	S4		
			24/50-60	P0		

Per ordinare una bobina, utilizzare il riferimento e il codice di tensione,
ad esempio: **495915** per **24 V CC = 495915C2**

Schema

CA

CC

Non appena viene trasmesso un impulso elettrico ai morsetti A-B, la forza elettromagnetica attrae il nucleo e, contemporaneamente, magnetizza un anello a magnete permanente reversibile. Il magnete mantiene il nucleo in posizione, che rimane così anche in assenza di corrente. Solo un impulso elettrico trasmesso ai morsetti A-C inverte il campo magnetico. Questo campo magnetico demagnetizza il magnete reversibile in modo da consentire alla molla di richiamo di riportare il nucleo nella posizione iniziale e chiudere la valvola.

Accensione/Spegnimento: Accensione (morsetti A-B): 50 ms min (1 s max)
CA: spegnimento (morsetti A-C): 35 ms min (1 s max)

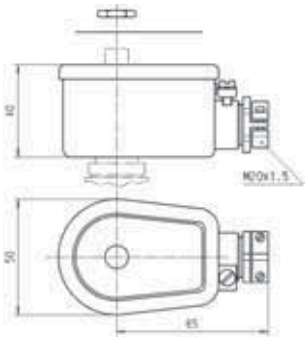

GRUPPO BOBINE

2.0/2.2

BOBINE A SICUREZZA AUMENTATA
"**nAc nCc**"

3.5.1 BOBINE 496155

Queste bobine possono essere montate con tutte le valvole a solenoide Parker che corrispondono al gruppo di bobine specificato.
Vedere la colonna "Gruppo bobine" nelle pagine della valvola.

Applicazione: controllo delle valvole a solenoide in aree pericolose in cui è richiesta la protezione a prova di esplosione Ex nAC IIC T3.

Vantaggi: housing orientabile a 360°, acciaio galvanizzato con morsetti a vite interni ed esterni per la messa a terra.

Dimensioni ridotte per facilità di montaggio in spazi ristretti. Semplificano l'adeguamento dell'apparecchiatura esistente ai requisiti delle aree pericolose.

Riferimento			496155			
Certificato			LCIE 05 ATEX 6010 X			
Gruppo bobine			2.0/2.2			
Tipo di protezione	Gas		II 3 G D - Ex nAc nCc IIC T3			
	Polvere		II 3 G D - Ex tc IIIC - T195°C			
Grado di protezione			**IP67** secondo gli standard IEC/EN 60529			
Temperatura ambiente			Da -40°C a +65°C L'applicazione è limitata anche dall'intervallo di temperatura della valvola.			
Classe di isolamento			F 155°C			
Collegamento elettrico			Tramite pressacavo speciale o M20 x 1.5 "Ex nAc nCc" sui morsetti a vite per cavi fino a 1.5 mm². I cavi con un diametro esterno compreso tra 6.5 mm e 13.5 mm possono essere sigillati con il pressacavo in gomma con anelli di tenuta elastici fornito.			
Assorbimento	CC	**Pn** (caldo)	14 W			
		P (freddo) 20°C	21 W			
	CA	**Pn** (mantenimento)	14 W			
		Attrazione (freddo)	56 VA (20 W)			
Peso			320 g			
Tensioni "Vn" Dal -10% al +10% della Vn			V CA/Hz	Codice Tensione	V CC	Codice Tensione
			24/50 110/50 230/50	A2 A5 F4	24 48	C2 C4

Per ordinare una bobina, utilizzare il riferimento e il codice di tensione, ad esempio: **496155** per **24 V CA/50 Hz = 496155A2**

Fusibili

Entrambi i componenti elettrici devono essere collegati in serie con un fusibile di sicurezza secondo IEC 60127-3.

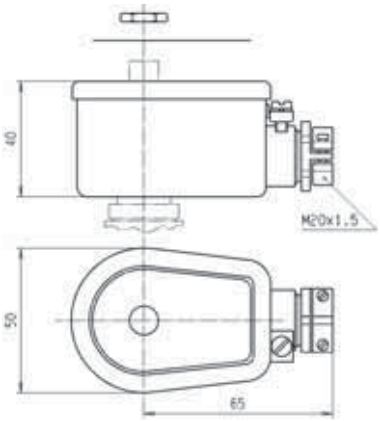

ZONA 1/21

483270 E 483270.02 - BOBINE, 50 mm

Queste bobine possono essere montate con tutte le valvole a solenoide ATEX Parker che corrispondono al gruppo di bobine indicato.
Vedere la colonna "Gruppo bobine" nelle pagine delle valvole.

Applicazione: controllo delle valvole a solenoide in aree pericolose in cui è richiesta la protezione a prova di esplosione Ex db IIC da T4 a T6.

Vantaggi: housing orientabile a 360°, in ghisa con camera di connessione interna. Il coperchio è realizzato in lega di alluminio ed è fissato con 4 viti. Il regolatore del comando elettromagnetico è composto da tre elementi principali: housing, bobina e canotto compresa la piastra di alloggiamento.

Dimensioni ridotte per facilità di montaggio in spazi ristretti.

Riferimento			483270 (M20 x 1.5) 483270.02 (1/2 NPT)		
Certificato			LCIE 02 ATEX 6008 X		
Gruppo bobine			11.0		
Tipo di protezione		Gas	II 2 G - Ex db IIC T4	II 2 G - Ex db IIC T5	II 2 G - Ex db IIC T6
		Polvere	II 2 D - Ex tb IIIC - T130°C	II 2 D - Ex tb IIIC - T95°C	II 2 D - Ex tb IIIC - T80°C
Grado di protezione			IP66 con pressacavo appropriato		
Temperatura ambiente			Da -40°C a +80°C	Da -40°C a +75°C	Da -40°C a +60°C
			L'applicazione è limitata anche dall'intervallo di temperatura della valvola.		
Classe di isolamento			F 155°C		
Collegamento elettrico			Il collegamento elettrico viene stabilito nella camera di connessione dell'alloggiamento su un morsetto a vite accessibile. Il cavo viene collegato alla camera di connessione tramite un filetto da 1/2" NPT che serve a fissare un pressacavo Ex db IIC approvato.		
Assorbimento	CC	Pn (caldo)	8 W		
		P (freddo) 20°C	9 W		
	CA	Pn (mantenimento)	8 W		
		Attrazione (freddo)	9 W		
Peso			1.100 g (con bobina)		

Tensioni "Vn"	V CA/Hz	Codice Tensione	V CC	Codice Tensione
Dal -10% al +10% della Vn	110-115/50-60 220-230/50-60	1P 3P	24 48 110	C2 C4 C5

Per ordinare una bobina, utilizzare il riferimento e il codice di tensione, ad esempio: **483270** per **24 V CC** = **483270C2**

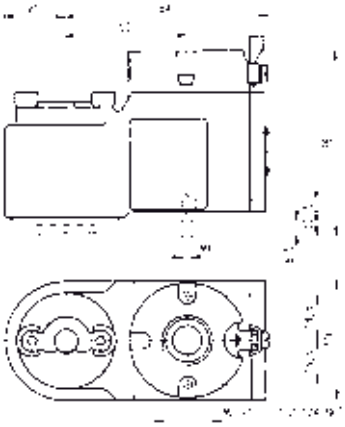

Canotto

Il canotto è saldato alla piastra in acciaio inossidabile ed è integrato nell'housing che è fissato con le viti al corpo della valvola.
Questo componente elettrico viene fornito solo come unità completa montata su una valvola, in quanto la protezione "Ex db" dipende dalla distanza minima tra il canotto, la piastra e l'housing.

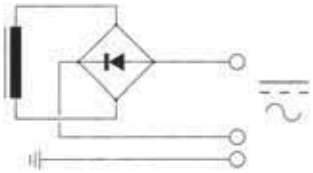

GRUPPO BOBINE

10.3

BOBINE ANTIDEFLAGRANTI
"**db**"

497105 & 497105.02 - BOBINE

Queste bobine possono essere montate con tutte le valvole a solenoide ATEX Parker che corrispondono al gruppo di bobine indicato.
Vedere la colonna "Gruppo bobine" nelle pagine delle valvole.

Applicazione: Controllo delle valvole a solenoide in aree pericolose in cui è richiesta la protezione a prova di esplosione Ex db IIC da T4 / T5 / T6.

Vantaggi: Housing orientabile a 360°, in acciaio inossidabile con il collegamento a vite interna ed esterna a massa.

Dimensioni ridotte per facilità di montaggio in spazi ristretti. Semplificano l'adeguamento dell'apparecchiatura esistente ai requisiti delle aree pericolose.

Riferimento			**497105 (M20x1.5) 497105.02 (NPT 1/2")**			
Certificato			**INERIS 12ATEX0041X - IECEx INE 12.0034X**			
Gruppo bobine			**10.3**			
Tipo di protezione		**Gas**	II 2 G - Ex db IIC T4 / T5 / T6			
		Polvere	II 2 D - Ex tb IIIC - 130°C / 95°C / 80°C			
Grado di protezione			**IP66** (con pressacavo appropriato) secondo gli standard IEC/EN 60529			
Temperatura ambiente			Da -50°C a +80°C / +60°C / +40°C L'applicazione è limitata anche dall'intervallo di temperatura della valvola.			
Classe di isolamento			F 155°C			
Collegamento elettrico			Il collegamento elettrico viene stabilito nella camera di connessione dell'alloggiamento su un morsetto a vite accessibile. Il cavo viene collegato alla camera di connessione tramite un fi letto da 1/2" NPT che serve a fi ssare un pressacavo Ex db IIC approvato.			
Assorbimento	**CC**	**Pn** (caldo)	8 W			
		P (freddo) 20°C	9 W			
	CA	**Pn** (mantenimento)	8 W			
		Attrazione (freddo)	9 W			
Tensioni "Vn"			**V CA/Hz**	**Codice Tensione**	**V CC**	**Codice Tensione**
Dal -10% al +10% della Vn			24/50-60 110-115 / 50-60 220-230 / 50-60	P0 1P 3P	12 24 48 110	C1 C2 C4 C5

Per ordinare una bobina, utilizzare il riferimento e il codice di tensione, ad esempio: **497105** per **24 VDC** = **497105C2**

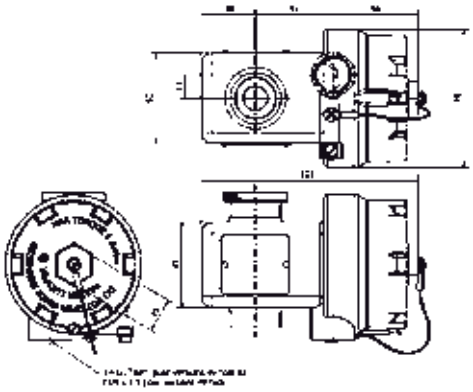

BOBINE A BASSA POTENZA, 22 mm

Queste bobine possono essere montate con tutte le valvole a solenoide ATEX Parker che corrispondono al gruppo di bobine indicato.
Vedere la colonna "Gruppo bobine" nelle pagine delle valvole.

Applicazione
Controllo delle valvole a solenoide in aree pericolose in cui è richiesta la protezione a prova di esplosione Ex mb II T4 o T5.

Vantaggi
Bobina e circuito magnetico incapsulati in materiale sintetico per la protezione antiurto e anticorrosione. Bobine CA con termofusibile integrato. Dimensioni ridotte per facilità di montaggio in spazi ristretti.

Riferimento			482605		482606 o 482606.160*		
Certificato			LCIE 02 ATEX 6014 X - IECEx LCI 07.0026 X				
Gruppo bobine			1.1				
Tipo di protezione	Gas		II 2 G - Ex mb II T4		II 2 G - Ex mb II T4		II 2 G - Ex mb II T5
	Polvere		II 2 D - Ex tb IIIC - T130°C		II 2 D - Ex tb IIIC - T130°C		II 2 D - Ex tb IIIC - T95°C
Grado di protezione			**IP65** secondo gli standard IEC/EN 60529 (con connettore)				
Temperatura ambiente			Da -40°C a +50°C L'applicazione è limitata anche dall'intervallo di temperatura della valvola.		Da -40°C a +65°C		Da -40°C a +40°C
Classe di isolamento			F 155°C				
Collegamento elettrico			Collegamento con cavo (3 x 0.75 mm²) incapsulato con bobina. Il materiale del cavo varia a seconda dell'applicazione.				
Assorbimento	CC	**Pn** (caldo)	5 W		2.5 W		
		P (freddo) 20°C	6.5 W		3 W		
	CA	**Pn** (mantenimento)	4 W		2 W		
		Attrazione (freddo)	8.9 VA (5 W)		5.7 VA (2.5 W)		
Peso			150 g				
Tensioni "Vn"			V CC	Codice Tensione	V CA/Hz	Codice Tensione	V CC	Codice Tensione
Dal -10% al +10% della Vn			24 110	C2 C5	24/50 48/50 110/50-115/50 220/50-230/50	A2 A4 0A 3D	24 48 110	C2 C4 C5

Per ordinare una bobina, utilizzare il riferimento e il codice di tensione, ad esempio: **482605** per **24 V CC = 482605C2**

* 482606.160 (con cavo lungo 6 m). Disponibile solo in C2 e 3D
* 482606 - (con cavo lungo 1.5 m)

Fusibili
Entrambe le bobine 482605 e 482606 devono essere collegati in serie con un fusibile di sicurezza secondo IEC 60127-3. Di seguito è riportato un esempio.

482605
CC: 12 V, 1000 mA - 24 V, 500 mA - 48 V, 200 mA - 110 V, 100 mA
CA 50 Hz: 24 V, 500 mA - 48 V, 250 mA - 110/115 V, 100 mA - 220/230 V, 3 mA
CA 60 Hz: 24 V, 630 mA - 110/115 V, 125 mA - 220/230 V, 63 mA

482606
CC: 12 V, 400 mA - 24 V, 200 mA - 48 V, 100 mA - 110 V, 50 mA
CA 50 Hz: 24 V, 250 mA - 48 V, 125 mA - 110/115 V, 63 mA - 220/230 V, 32 mA
CA 60 Hz: 24 V, 315 mA - 110/115 V, 63 mA - 220/230 V, 32 mA

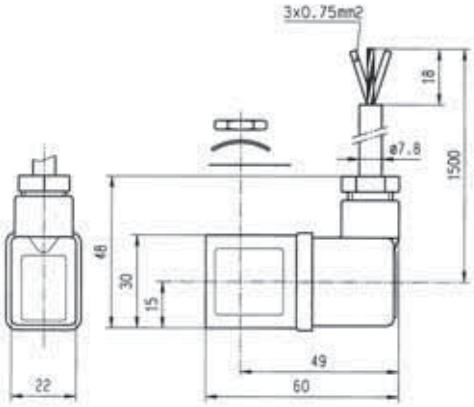

GRUPPO BOBINE

2.0/2.1

BOBINE INCAPSULATE
"mb"

BOBINE, 32 mm

Queste bobine possono essere montate con tutte le valvole a solenoide ATEX Parker che corrispondono al gruppo di bobine indicato.
Vedere la colonna "Gruppo bobine" nelle pagine delle valvole.

Applicazione: controllo delle valvole a solenoide in aree pericolose in cui è richiesta la protezione a prova di esplosione Ex mb II T4.

Vantaggi: bobina e circuito magnetico incapsulati in materiale sintetico per la protezione antiurto e anticorrosione. Bobine CA/CC con termofusibile integrato. Bobine CC con diodo anti-sovratensione integrato.

Dimensioni ridotte per facilità di montaggio in spazi ristretti.

Riferimento			492670*			
Certificato			LCIE 02 ATEX 6015 X			
Gruppo bobine			2.0/2.1			
Tipo di protezione	Gas		II 2 G - Ex mb II T4			
	Polvere		II 2 D - Ex tb IIIC - T130°C			
Grado di protezione			**IP65** secondo gli standard IEC 60529 (con connettore DIN)			
Temperatura ambiente			Da -40°C a +40°C L'applicazione è limitata anche dall'intervallo di temperatura della valvola.			
Classe di isolamento			F 155°C			
Collegamento elettrico			Collegamento con cavo (3 x 1.5 mm²) incapsulato con bobina. Il materiale del cavo varia a seconda dell'applicazione.			
Assorbimento	CC	**Pn** (caldo)	9 W			
		P (freddo) 20°C	12 W			
	CA	**Pn** (mantenimento)	8 W			
		Attrazione (freddo)	26 VA (9 W)			
Peso			320 g			
Tensioni "Vn" Dal -10% al +10% della Vn			V CA/Hz	Codice Tensione	V CC	Codice Tensione
			48/50 230/50	A4 F4	24 48 110	C2 C4 C5

Per ordinare una bobina, utilizzare il riferimento e il codice di tensione, ad esempio: **492670** per **24 V CC** = **492670C2**

* 492670 (con cavo lungo 3 m)

Condizioni speciali

Le linee di collegamento dell'alimentazione devono essere fissate e posizionate in modo tale da impedire eventuali danni meccanici.

È necessario utilizzare un fusibile di sicurezza con una corrente nominale pari alla corrente della bobina (al massimo 3 volte secondo gli standard IEC 60127 e IEC 60269) contro i cortocircuiti.

Valori consigliati

CC: 12 V, 1250 mA - 24 V, 630 mA - 48 V, 315 mA - 110 V, 125 mA
CA 50 Hz: 24 V, 1000 mA - 48 V, 500 mA - 110 V, 250 mA - 230 V, 100 mA
CA 60 Hz: 240 V, 100 mA

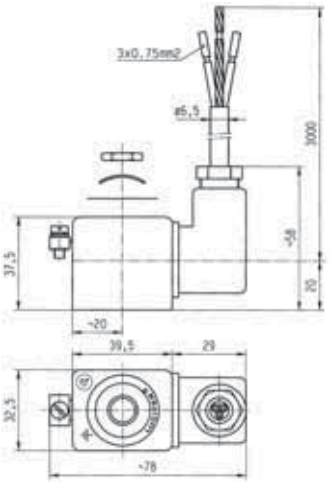

BOBINE INCAPSULATE
"mb"

CON HOUSING METALLICO IMPERMEABILE, 50 mm

Queste bobine possono essere montate con tutte le valvole a solenoide ATEX Parker che corrispondono al gruppo di bobine indicato.
Vedere la colonna "Gruppo bobine" nelle pagine delle valvole.

Applicazione: controllo delle valvole a solenoide in aree pericolose in cui è richiesta la protezione a prova di esplosione Ex mb II T4 o T5.

Vantaggi: housing in acciaio rivestito di epossidica. La bobina a solenoide, il raddrizzatore (diodi al silicio), il fusibile e la protezione a varistore sono completamente incapsulati nell'housing della bobina per mezzo di resina epossidica.

Dimensioni ridotte per facilità di montaggio in spazi ristretti. Semplificano l'adeguamento dell'apparecchiatura esistente ai requisiti delle aree pericolose.

Riferimento			492070 (con cavo lungo 3 m) 492070.160 (con cavo lungo 6 m)			
Certificato			LCIE 02 ATEX 6017 X - IECEx LCI 09.0024 X			
Gruppo bobine			2.0/2.1			
Tipo di protezione	Gas		II 2 G - Ex mb II T4		II 2 G - Ex mb II T5	
	Polvere		II 2 D - Ex tb IIIC - T130°C		II 2 D - Ex tb IIIC - T95°C	
Temperatura ambiente			Da -40°C a +65°C L'applicazione è limitata anche dall'intervallo di temperatura della valvola.		Da -40°C a +40°C	
Classe di isolamento			F 155°C			
Collegamento elettrico			Collegamento con cavo (3 x 1.5 mm²) con pressacavo M20 x 1.5, collegamento con vite della terra esterna			
Assorbimento	CC	Pn (caldo)	8 W			
		P (freddo) 20°C	10 W			
	CA	Pn (mantenimento)	9 W			
		Attrazione (freddo)	11 W			
Peso			500 g			
Tensioni "Vn"			V CA/Hz	Codice Tensione	V CC	Codice Tensione
Dal -10% al +10% della Vn			24/50-60 110/50-60 220/50-60 230/50-60 240/50-60	P0 P2 R5 P9 Q1	24 48 110	C2 C4 C5

Per ordinare una bobina, utilizzare il riferimento e il codice di tensione, ad esempio: **492070** per **24 V CC** = **492070C2**

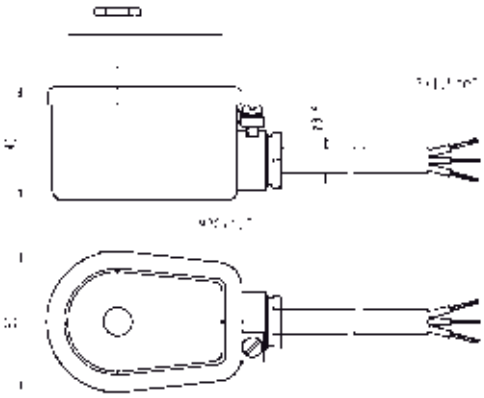

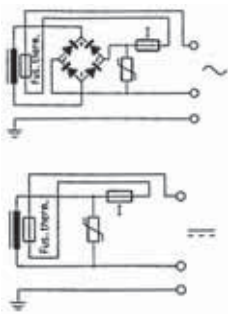

GRUPPO BOBINE

2.0/2.1

BOBINE INCAPSULATE
"mb"

BOBINE HZ10 A DOPPIA FREQUENZA

Queste bobine possono essere montate con tutte le valvole a solenoide ATEX Parker che corrispondono al gruppo di bobine indicato.
Vedere la colonna "Gruppo bobine" nelle pagine delle valvole.

Applicazione: controllo delle valvole a solenoide in aree pericolose in cui è richiesta la protezione a prova di esplosione Ex mb II T4 o T5.

La bobina è fornito con un cavo di 3 metri.

Specifica			Doppia frequenza			
Riferimento			HZ10			
Certificato			LCIE 02 ATEX 6020 X - IECEx LCI 08.0027 X			
Gruppo bobine			2.0/2.1			
Tipo di protezione	Gas		II 2 G - Ex mb II T4/T5			
	Polvere		II 2 D - Ex tb IIIC T			
Grado di protezione			**IP65** secondo gli standard IEC/EN 60529 (con connettore)			
Temperatura ambiente			Da -40°C a +65°C L'applicazione è limitata anche dall'intervallo di temperatura della valvola.			
Classe di isolamento			H 180°C			
Ciclo di funzionamento			100% continuo			
Collegamento elettrico			Collegamento con cavo (3 x 1.5 mm²) con pressacavo M20 x 1.5, collegamento con vite della terra esterna			
Assorbimento	CC	**Pn** (caldo)	8 W			
		P (freddo) 20°C	-			
	CA	**Pn** (mantenimento)	8 W			
		Attrazione (freddo)	-			
Peso			299 g			
Tensioni "Vn"			V CA/Hz	Codice Tensione	V CC	Codice Tensione
Dal -10% al +10% della Vn			24/60	B2	12	C1
			110/50-120/60	P3	24	C2
			220/50-240/60	Q3	120	C6

Per ordinare una bobina, utilizzare il riferimento e il codice di tensione, ad esempio: **HZ10** per **24 V CC** = **HZ10C2**

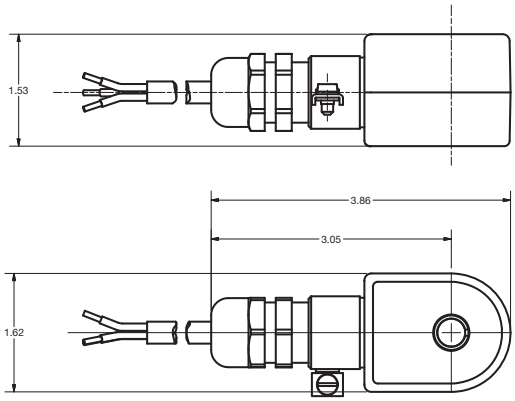

Dimensioni in pollici.

BOBINE A DOPPIA FREQUENZA HZ11

Queste bobine possono essere montate con tutte le valvole a solenoide ATEX Parker che corrispondono al gruppo di bobine indicato.

Vedere la colonna "Gruppo bobine" nelle pagine delle valvole.

Applicazione: controllo delle valvole a solenoide in aree pericolose in cui è richiesta la protezione a prova di esplosione Ex mb II T4 o T5.

La bobina è fornito con un cavo di 3 metri.

Specifica			Doppia frequenza			
Riferimento			HZ11			
Certificato			LCIE 02 ATEX 6020 X - IECEx LCI 08.0027 X			
Gruppo bobine			2.0/2.2			
Tipo di protezione	Gas		II 2 G - Ex mb IIC T3/T4/T5			
	Polvere		II 2 D - Ex tb IIIC T195°C / 130°C / 95°C			
Grado di protezione			**IP65** secondo gli standard IEC/EN 60529 (con connettore)			
Temperatura ambiente			Da -40°C a +50°C L'applicazione è limitata anche dall'intervallo di temperatura della valvola.			
Classe di isolamento			H 180°C			
Ciclo di funzionamento			100% continuo			
Assorbimento	CC	**Pn** (caldo)	14 W			
		P (freddo) 20°C	-			
	CA	**Pn** (mantenimento)	14 W			
		Attrazione (freddo)	-			
Peso			299 g			
Tensioni "Vn"			V CA/Hz	Codice Tensione	V CC	Codice Tensione
Dal -10% al +10% della Vn			24/60	B2	12	C1
			110/50-120/60	P3	24	C2
			220/50-240/60	Q3	120	C6

Per ordinare una bobina, utilizzare il riferimento e il codice di tensione, ad esempio: **HZ11** per **24 V CC** = **HZ11C2**

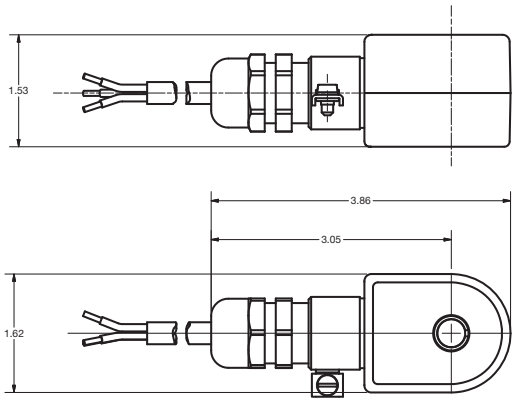

Dimensioni in pollici.

GRUPPI BOBINE

6.0

BOBINE INCAPSULATE
ANTIDEFLAGRANTI
"db mb"

495900 - BOBINE A BASSA POTENZA, 37 mm

Queste bobine possono essere montate con tutte le valvole a solenoide ATEX Parker che corrispondono al gruppo di bobine indicato.
Vedere la colonna "Gruppo bobine" nelle pagine delle valvole.

Applicazione: controllo delle valvole a solenoide in aree pericolose in cui è richiesta la protezione a prova di esplosione Ex db mb IIC da T4 a T6.

Vantaggi: housing orientabile a 360°, in resina rinforzata con fibra di vetro (classe H). La bobina del solenoide, il raddrizzatore (diodi al silicio), i fusibili e la protezione a varistore sono completamente incapsulati nell'housing della bobina con resina epossidica per la protezione antiurto e anticorrosione.

L'alloggiamento in plastica viene fornito con un pressacavo M20 x 1.5 certificato per la protezione "db". Dimensioni ridotte per facilità di montaggio in spazi ristretti.

Riferimento			495900 (VCA)		495900 (VCC)	
Certificato			LCIE 03 ATEX 6451 X - IECEx LCI 06.0004 X			
Gruppo bobine			6.0			
Tipo di protezione		Gas	II 2 G - Ex db mb IIC T4/T5/T6		II 2 G - Ex db mb IIC T5/T6	
		Polvere	II 2 D Ex tb IIIC - 130°C/95°C/80°C		II 2 D Ex tb IIIC - 95°C/80°C	
Grado di protezione			**IP67** secondo gli standard IEC/EN 60529			
Temperatura ambiente			Da -40°C a +80°C/+55°C/+40°C L'applicazione è limitata anche dall'intervallo di temperatura della valvola.		Da -40°C a +80°C/+55°C	
Classe di isolamento			H 180°			
Collegamento elettrico			Il collegamento elettrico viene stabilito nella scatola di connessione sul morsetto di un connettore facilmente accessibile. Il cavo (Ø min: 5 mm, Ø max: 11 mm, sezione max: 2.5 mm²) viene collegato alla scatola di connessione tramite il pressacavo M20 x 1.5 integrato.			
Assorbimento	CC	**Pn** (caldo)	-		2 W	
		P (freddo) 20°C	-		2.5 W	
	CA	**Pn** (mantenimento)	2.5 W		-	
		Attrazione (freddo)	3 W		-	
Tensioni "Vn"			V CA/Hz	Codice Tensione	V CC	Codice Tensione
Dal -10% al +10% della Vn per CA Dal -10% al +10% della Vn per CC			24/50 48/50 115/50 230/50	A2 A4 E5 F4	24 48 110	C2 C4 C5

Per ordinare una bobina, utilizzare il riferimento e il codice di tensione, ad esempio: **495900** per **24 V CC** = **495900C2**

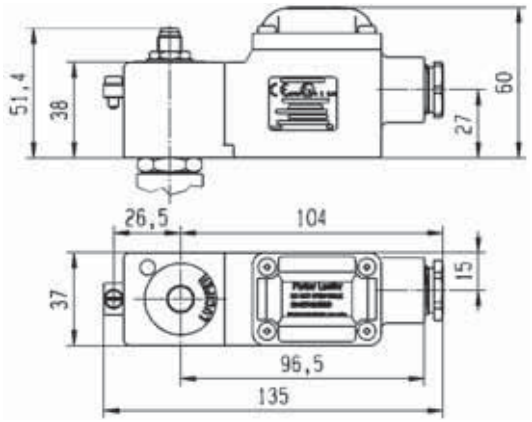

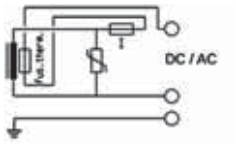

BOBINE INCAPSULATE
ANTIDEFLAGRANTI
"db mb"

495905 - BOBINE, 37 mm

Queste bobine possono essere montate con tutte le valvole a solenoide ATEX Parker che corrispondono al gruppo di bobine indicato.
Vedere la colonna "Gruppo bobine" nelle pagine delle valvole.

Applicazione: controllo delle valvole a solenoide in aree pericolose in cui è richiesta la protezione a prova di esplosione Ex db mb IIC T4.

Vantaggi: housing orientabile a 360°, in resina rinforzata con fibra di vetro (classe H). La bobina del solenoide, il raddrizzatore (diodi al silicio), i fusibili e la protezione a varistore sono completamente incapsulati nell'housing della bobina con resina epossidica per la protezione antiurto e anticorrosione.

L'alloggiamento in plastica viene fornito con un pressacavo M20 x 1.5 certificato per la protezione "db". Dimensioni ridotte per facilità di montaggio in spazi ristretti.

Riferimento			495905	495905.05*
Certificato			LCIE 03 ATEX 6451 X - IECEx LCI 06.0004 X	
Gruppo bobine			2.0/2.1	
Tipo di protezione		Gas	II 2 G - Ex db mb IIC T4	
		Polvere	II 2 D - Ex tb IIIC - 130°C	
Grado di protezione			**IP67** secondo gli standard IEC/EN 60529	
Temperatura ambiente			Da -40°C a +80°C L'applicazione è limitata anche dall'intervallo di temperatura della valvola.	
Classe di isolamento			H 180°	
Collegamento elettrico			Il collegamento elettrico viene stabilito nella scatola di connessione sul morsetto di un connettore facilmente accessibile. Il cavo (Ø min: 5 mm, Ø max: 11 mm, sezione max: 2.5 mm²) viene collegato alla scatola di connessione tramite il pressacavo M20 x 1.5 integrato.	
Assorbimento	CC	**Pn** (caldo)	8 W	
		P (freddo) 20°C	9 W	
	CA	**Pn** (mantenimento)	8 W	
		Attrazione (freddo)	9 W	

Tensioni "Vn"	V CA/Hz	Codice Tensione	V CC	Codice Tensione
Dal -10% al +10% della Vn per CA Dal -10% al +10% della Vn per CC	24/50 48/50 115/50 230/50	A2 A4 E5 F4	24 48 110	C2 C4 C5

Per ordinare una bobina, utilizzare il riferimento e il codice di tensione, ad esempio: **495905** per **24 V CC** = **495905C2**

* 495905.05 disponibile solo in C4

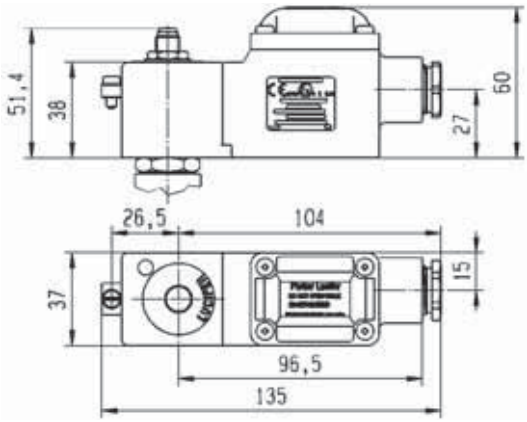

495905

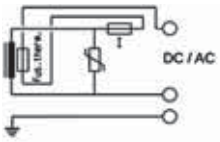

*495905.05

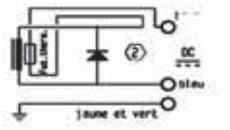

GRUPPO BOBINE

10.2/10.1

BOBINE INCAPSULATE
ANTIDEFLAGRANTI
"db mb"

496555 E 496560 - BOBINE, 37 mm

Queste bobine possono essere montate con tutte le valvole a solenoide ATEX Parker che corrispondono al gruppo di bobine indicato.
Vedere la colonna "Gruppo bobine" nelle pagine delle valvole.

Applicazione: controllo delle valvole a solenoide in aree pericolose in cui è richiesta la protezione a prova di esplosione Ex db mb IIC da T4 a T6.

Vantaggi: housing orientabile a 360°, in resina rinforzata con fibra di vetro (classe H). La bobina del solenoide, il raddrizzatore (diodi al silicio), i fusibili e la protezione a varistore sono completamente incapsulati nell'housing della bobina con resina epossidica per la protezione antiurto e anticorrosione.

L'alloggiamento in plastica viene fornito con un pressacavo M20 x 1.5 certificato per la protezione "db". Dimensioni ridotte per facilità di montaggio in spazi ristretti.

Riferimento			496555				496560			
Certificato			LCIE 07 ATEX 6075 X - IECEx LCI 07.0014X							
Gruppo bobine			10.2				10.1			
Tipo di protezione		Gas	II 2 G - Ex db mb IIC T4/T5/T6				II 2 G - Ex db mb IIC T4			
		Polvere	II 2 D - Ex tb IIIC - T130°C/95°C/80°C				II 2 D - Ex tb IIIC - T130°C			
Grado di protezione			**IP67** secondo gli standard IEC/EN 60529							
Temperatura ambiente			Da -40°C a +65°C L'applicazione è limitata anche dall'intervallo di temperatura della valvola.							
Classe di isolamento			H 180°							
Collegamento elettrico			Il collegamento elettrico viene stabilito nella scatola di connessione sul morsetto di un connettore facilmente accessibile. Il cavo (Ø min: 5 mm, Ø max: 11 mm, sezione max: 2.5 mm²) viene collegato alla scatola di connessione tramite il pressacavo M20 x 1.5 integrato.							
Assorbimento	CC	**Pn** (caldo)	-		6 W		-		8 W	
		P (freddo) 20°C	-		7.5 W		-		10.5 W	
	CA	**Pn** (mantenimento)	6 W		-		8 W		-	
		Attrazione (freddo)	7.5 W		-		10.5 W		-	
Tensioni "Vn"			V CA/Hz	Codice Tensione	V CC	Codice Tensione	V CA/Hz	Codice Tensione	V CC	Codice Tensione
Dal -10% al +10% della Vn			230/50-60 110/50-60 24/50-60 48/50-60	P9 P2 P0 S4	24 48 110	C2 C4 C5	230/50-60 110/50-60 24/50-60 48/50-60	P9 P2 P0 S4	24 48 110	C2 C4 C5

Per ordinare una bobina, utilizzare il riferimento e il codice di tensione, ad esempio: **496555** per **24 V CC** = **496555C2**

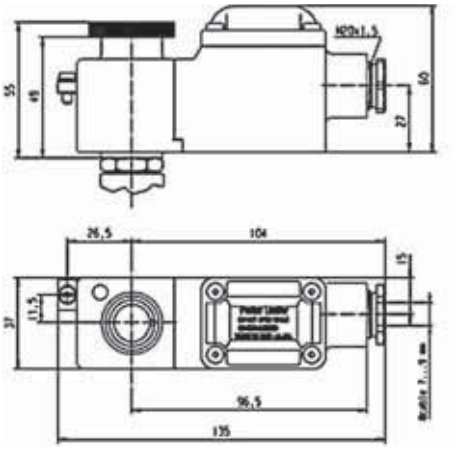

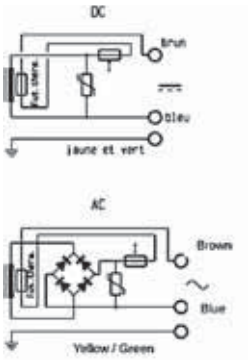

496700 E 496800 - BOBINE, 37 mm

Queste bobine possono essere montate con tutte le valvole a solenoide ATEX Parker che corrispondono al gruppo di bobine indicato.
Vedere la colonna "Gruppo bobine" nelle pagine delle valvole.

Applicazione: controllo delle valvole a solenoide in aree pericolose in cui è richiesta la protezione a prova di esplosione Ex db mb IIC da T4 a T6.

Vantaggi: housing orientabile a 360°, in resina rinforzata con fibra di vetro (classe H). La bobina del solenoide, il raddrizzatore (diodi al silicio), i fusibili e la protezione a varistore sono completamente incapsulati nell'housing della bobina con resina epossidica per la protezione antiurto e anticorrosione.

L'alloggiamento in plastica viene fornito con un foro filettato da 1/2" o M20 x 1.5 per un'ampia gamma di pressacavi. Dimensioni ridotte per facilità di montaggio in spazi ristretti.

Riferimento			496700 o 496700.02 (NPT)		496800 o 496800.02 (NPT)	
Certificato			LCIE 07 ATEX 6075 X - IECEx LCI 07.0014X			
Gruppo bobine			10.2		10.1	
Tipo di protezione		Gas	II 2 G - Ex db mb IIC T4/T5/T6		II 2 G - Ex db mb IIC T4	
		Polvere	II 2 D - Ex tb IIIC - T130°C/95°C/80°C		II 2 D - Ex tb IIIC - T130°C	
Grado di protezione			**IP67** secondo gli standard IEC/EN 60529			
Temperatura ambiente			Da -40°C a +35°C/+50°C/+65°C L'applicazione è limitata anche dall'intervallo di temperatura della valvola.		Da -40°C a +65°C	
Classe di isolamento			H 180°			
Collegamento elettrico			Il collegamento elettrico viene stabilito nella scatola di connessione sul morsetto di un connettore facilmente accessibile. Il cavo (Ø min: 5 mm, Ø max: 11 mm, sezione max: 2.5 mm²) viene collegato alla scatola di connessione tramite attraverso una filettatura conica NPT da 1/2" o M20 con passo da 1.5 mm, nella quale deve essere installato un passacavo dBIIC con certificazione Ex.			
Assorbimento	CC	**Pn** (caldo)	-	6 W	-	8 W
		P (freddo) 20°C	-	7.5 W	-	10.5 W
	CA	**Pn** (mantenimento)	6 W	-	8 W	-
		Attrazione (freddo)	7.5 W	-	10.5 W	-

Tensioni "Vn"	V CA/Hz	Codice Tensione	V CC	Codice Tensione	V CA/Hz	Codice Tensione	V CC	Codice Tensione
Dal -10% al +10% della Vn	230/50-60 110/50-60 24/50-60 48/50-60	P9 P2 P0 S4	24 48 110	C2 C4 C5	230/50-60 110/50-60 24/50-60 48/50-60	P9 P2 P0 S4	24 48 110	C2 C4 C5

Per ordinare una bobina, utilizzare il riferimento e il codice di tensione, ad esempio: **496700** per **24 V CC** = **496700C2**

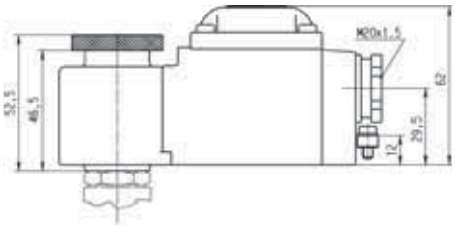

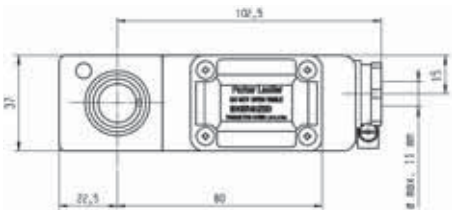

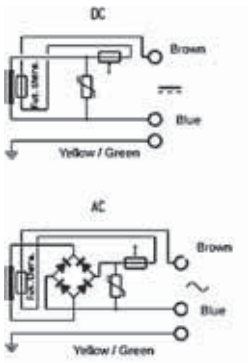

GRUPPO BOBINE

2.0/2.1

BOBINE INCAPSULATE
ANTIDEFLAGRANTI
"**db mb**"

493640 O HZ09 - BOBINE

Queste bobine possono essere montate con tutte le valvole a solenoide ATEX Parker che corrispondono al gruppo di bobine indicato.
Vedere la colonna "Gruppo bobine" nelle pagine delle valvole.

Applicazione: controllo delle valvole a solenoide in aree pericolose in cui è richiesta la protezione a prova di esplosione Ex db mb II 2 G/D da T4 a T5.

Vantaggi: l'armatura metallica incapsulata in materiale sintetico fornisce una protezione antiurto e anticorrosione elevata.

Dimensioni ridotte per facilità di montaggio in spazi ristretti.

Riferimento			493640 o HZ09 493640.60* o HZ55			
Certificato			LCIE 02 ATEX 6009 X			
Gruppo bobine			2.0/2.1			
Tipo di protezione	Gas		II 2 G - Ex db mb T4/T5			
	Polvere		II 2 D - Ex tb IIIC - T130°C/T95°C			
Grado di protezione			**IP65** secondo gli standard IEC/EN 60529			
Temperatura ambiente			Da -40°C a +75°C/+40°C L'applicazione è limitata anche dall'intervallo di temperatura della valvola.			
Classe di isolamento			F 155°C			
Collegamento elettrico			Pressacavo "Ex db" speciale, acciaio galvanizzato, con sigillante EPDM. Cavo (EPR), con diametro esterno 7.3 ± 0.5 mm e lungo 3.000 mm.			
Assorbimento	CC	**Pn** (caldo)	8 W			
		P (freddo) 20°C	9 W			
	CA	**Pn** (mantenimento)	8 W			
		Attrazione (freddo)	32 VA (9 W)			
Peso			500 g			
Tensioni "Vn"			V CA/Hz	Codice Tensione	V CC	Codice Tensione
Dal -15% al +10% della Vn			110/50 110-120/50-60 220-240/50-60	A5 P3 Q3	24 48 120	C2 C4 C6

Per ordinare una bobina, utilizzare il riferimento e il codice di tensione, ad esempio: **493640** per **24 V CC** = **493640C2**

* 493640.60 (con cavo lungo 6 m)

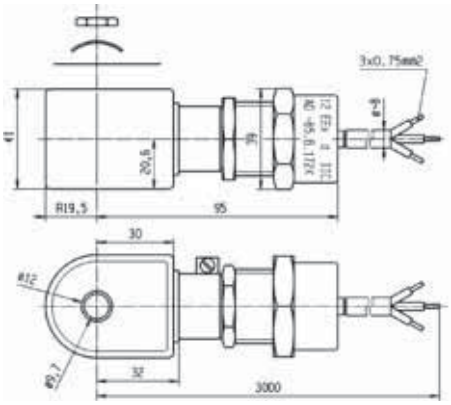

Fusibili

Questa bobina è dotata di un termofusibile standard su tutti i modelli e per tutte le tensioni.

Questa bobina deve essere collegata in serie con un fusibile di sicurezza secondo IEC 60127-3.

CC: 24 V, 400 mA

CA: 110/50-120/60, 200 mA
220/50-240/60, 100 mA
230/50, 95 mA

GRUPPO BOBINE

2.0/2.1

BOBINE A SICUREZZA
AUMENTATA
"e mb , e"

483371 E 494040 - BOBINE, 50 mm

Queste bobine possono essere montate con tutte le valvole a solenoide ATEX Parker che corrispondono al gruppo di bobine indicato.
Vedere la colonna "Gruppo bobine" nelle pagine delle valvole.

Applicazione: controllo delle valvole a solenoide in aree pericolose in cui è richiesta la protezione a prova di esplosione Ex e mb, e II T3 o T4.

Vantaggi: housing orientabile a 360°, acciaio galvanizzato con morsetti a vite interni ed esterni per la messa a terra.

Dimensioni ridotte per facilità di montaggio in spazi ristretti. Semplificano l'adeguamento dell'apparecchiatura esistente ai requisiti delle aree pericolose.

Riferimento			483371	494040
Certificato			LCIE 02 ATEX 6011 X	LCIE 02 ATEX 6013 X
Gruppo bobine			2.0/2.1	
Tipo di protezione		Gas	II 2 G - Ex e mb IIC T4	II 2 G - Ex e IIC T3/T4 Gb
		Polvere	II 2 D - Ex tb IIIC - T130°C Db	II 2 D - Ex tb IIIC - T195°C/T130 °C Db
Grado di protezione			**IP67** secondo gli standard IEC/EN 60529	
Temperatura ambiente			Da -40°C a +65°C L'applicazione è limitata anche dall'intervallo di temperatura della valvola.	Da -40°C a +90°C/+65°C
Classe di isolamento			F 155°C	H 180°C
Collegamento elettrico			Tramite pressacavo speciale o M20 x 1.5, "Ex eb" sui morsetti a vite per cavi fino a 1.5 mm². I cavi con un diametro esterno compreso tra 6.5 mm e 13.5 mm possono essere sigillati con il pressacavo in gomma con anelli di tenuta elastici fornito.	
Assorbimento	CC	**Pn** (caldo)	8 W	8 W
		P (freddo) 20°C	9 W	9 W
	CA	**Pn** (mantenimento)	8 W	8 W
		Attrazione (freddo)	32 VA (9 W)	32 VA (9 W)
Peso			320 g	

Tensioni "Vn"	V CA/Hz	Codice Tensione	V CC	Codice Tensione	V CA/Hz	Codice Tensione	V CC	Codice Tensione
Dal -10% al +10% della Vn	24/50 48/50 110-115/50 220-230/50	A2 A4 OA 3D	24 48 110	C2 C4 C5	220-230/50	3D	24	C2

Per ordinare una bobina, utilizzare il riferimento e il codice di tensione, ad esempio: **483371** per **24 V CC** = **483371C2**

Fusibili
Entrambe le bobine devono essere collegate in serie con un fusibile di sicurezza secondo IEC 60127-3.

483371

CC: 24 V, 400 mA - 48V, 250 mA - 110 V, 100 mA
CA 50 Hz: 24 V, 630 mA - 48V, 315 mA - 110 V, 160 mA - 220/230 V, 80 mA

494040

CC: 12 V, 400 mA - 24V, 200 mA - 48 V, 100 mA - 110V, 50 mA
CA 50 Hz: 24 V, 250 mA - 48V, 125 mA - 110/115 V, 63 mA - 220/230 V, 32 mA

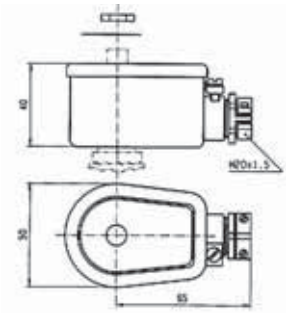

GRUPPO BOBINE

10.1

BOBINE INCAPSULATE
E A SICUREZZA
AUMENTATA "**eb**"

492310 - BOBINE, 50 mm

Queste bobine possono essere montate con tutte le valvole a solenoide ATEX Parker che corrispondono al gruppo di bobine indicato.
Vedere la colonna "Gruppo bobine" nelle pagine delle valvole.

Applicazione: controllo delle valvole a solenoide in aree pericolose in cui è richiesta la protezione a prova di esplosione Ex eb mb II da T4 a T5.

Vantaggi: housing orientabile a 360°, in resina rinforzata con fibra di vetro. La bobina del solenoide, il raddrizzatore (diodi al silicio), i fusibili e la protezione a varistore sono completamente incapsulati nell'housing della bobina con resina epossidica per la protezione antiurto e anticorrosione.

Dimensioni ridotte per facilità di montaggio in spazi ristretti.

Riferimento			492310			
Certificato			LCIE 02 ATEX 6023 X - IECEx LCI 06.0011 X			
Gruppo bobine			10.1			
Tipo di protezione	Gas		II 2 G - Ex eb mb II T4/T5			
	Polvere		II 2 D - Ex tb IIIC - T130°C/T95°C			
Grado di protezione			**IP66** secondo gli standard IEC/EN 60529			
Temperatura ambiente			Da -40°C a +75°C/+40°C La temperatura di esercizio della valvola/bobina può essere limitata da quella della valvola.			
Classe di isolamento			F 155°C			
Collegamento elettrico			Scatola di connessione con morsetti e ingresso del cavo tramite pressacavo M20 x 1.5 - Possibilità di aggiungere la terra tramite una vite esterna			
Assorbimento	CC	**Pn** (caldo)	6 W			
		P (freddo) 20°C	7.5 W			
	CA	**Pn** (mantenimento)	6 W			
		Attrazione (freddo)	7.5 W			
Peso			500 g			
Tensioni "Vn" Dal -10% al +10% della Vn			V CA/Hz	Codice Tensione	V CC	Codice Tensione
			24/50-60 48/50-60 230/50-60	P0 S4 P9	24 48 110	C2 C4 C5

Per ordinare una bobina, utilizzare il riferimento e il codice di tensione, ad esempio: **492310** per **24 V CC** = **492310C2**

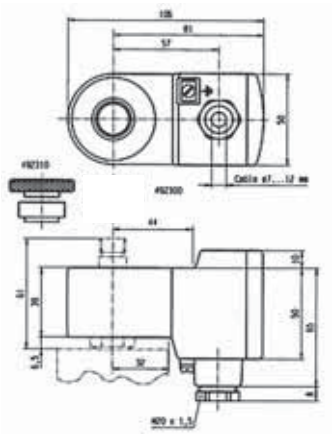

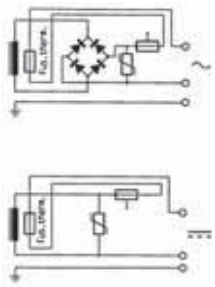

492210 - BOBINE "BOOSTER", 50 mm

Queste bobine possono essere montate con tutte le valvole a solenoide ATEX Parker che corrispondono al gruppo di bobine indicato.
Vedere la colonna "Gruppo bobine" nelle pagine delle valvole.

Applicazione: controllo delle valvole a solenoide in aree pericolose in cui è richiesta la protezione a prova di esplosione Ex eb mb IIC T5/T6.

Vantaggi: housing orientabile a 360°, acciaio galvanizzato con morsetti a vite interni ed esterni per la messa a terra.

Dimensioni ridotte per facilità di montaggio in spazi ristretti. Semplificano l'adeguamento dell'apparecchiatura esistente ai requisiti delle aree pericolose.

Riferimento		492210
Certificato		LCIE 02 ATEX 6023 X - IECEx LCI 06.0011 X
Gruppo bobine		9.0
Tipo di protezione	Gas	II 2 G - Ex eb mb IIC T5/T6
	Polvere	II 2 D - Ex tb IIIC - T95°C/T80°C
Grado di protezione		**IP66** secondo gli standard IEC/EN 60529
Temperatura ambiente		Da -40°C a +75°C/+40°C La temperatura di esercizio della valvola/bobina può essere limitata da quella della valvola.
Classe di isolamento		F 155°C
Collegamento elettrico		Scatola di connessione con morsetti e ingresso del cavo tramite pressacavo M20 x 1.5 Possibilità di aggiungere la terra tramite una vite esterna
Assorbimento in CC		Da 1 a 1.8 W secondo la lunghezza del cavo
Corrente attrazione		I min = 60 mA (I nominale = 75 mA)
CC tensione		V nominale = 24 V CC (C2), V min = 21.6 V CC
Resistenza		23 Ω + (R = 270 Ω)
Induttanza		0 mH
Capacitanza		0 µF
Tempo di risposta		Da 2 a 4 s
Peso		500 g

Per ordinare una bobina, utilizzare il riferimento e il codice di tensione, ad esempio: **492210** per **24 V CC** = **492210C2**

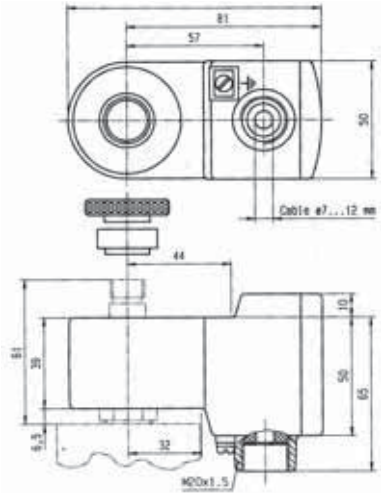

Indicazioni

Booster per valvole offshore

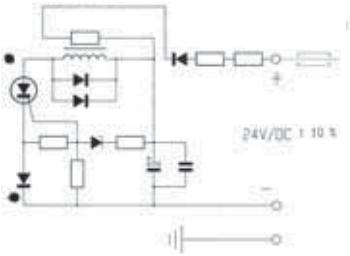

Queste bobine necessitano di un fusibile esterno con I = 100 mA

GRUPPO BOBINE

2.0/2.1

BOBINE INCAPSULATE
E A SICUREZZA
AUMENTATA "**eb**"

492190 - BOBINE, 50 mm

Queste bobine possono essere montate con tutte le valvole a solenoide ATEX Parker che corrispondono al gruppo di bobine indicato.
Vedere la colonna "Gruppo bobine" nelle pagine delle valvole.

Applicazione: controllo delle valvole a solenoide in aree pericolose in cui è richiesta la protezione a prova di esplosione Ex eb mb IIC da T3 a T4.

Vantaggi: housing orientabile a 360°, in resina rinforzata con fibra di vetro. La bobina del solenoide, il raddrizzatore (diodi al silicio), i fusibili e la protezione a varistore sono completamente incapsulati nell'housing della bobina con resina epossidica per la protezione antiurto e anticorrosione.

Dimensioni ridotte per facilità di montaggio in spazi ristretti.

Riferimento			492190			
Certificato			LCIE 02 ATEX 6023 X - IECEx LCI 06.0011 X			
Gruppo bobine			2.0/2.1			
Tipo di protezione		Gas	II 2 G - Ex eb mb IIC T3/T4			
		Polvere	II 2 D - Ex tb IIIC - 195°C/130°C			
Grado di protezione			**IP66** secondo gli standard IEC/EN 60529			
Temperatura ambiente			Da -40°C a +75°C/+40°C La temperatura di esercizio della valvola/bobina può essere limitata da quella della valvola.			
Classe di isolamento			F 155°C			
Collegamento elettrico			Scatola di connessione con morsetti e ingresso del cavo tramite pressacavo M20 x 1.5 Possibilità di aggiungere la terra tramite una vite esterna			
Assorbimento	CC	**Pn** (caldo)	9 W			
		P (freddo) 20°C	11 W			
	CA	**Pn** (mantenimento)	11 W			
		Attrazione (freddo)	13 W			
Peso			320 g			
Tensioni "Vn" Dal -10% al +10% della Vn			V CA/Hz	Codice Tensione	V CC	Codice Tensione
			24/50-60 110/50-60 230/50-60	P0 P2 P9	24 48 110	C2 C4 C5

Per ordinare una bobina, utilizzare il riferimento e il codice di tensione, ad esempio: **492190** per **24 V CC** = **492190C2**

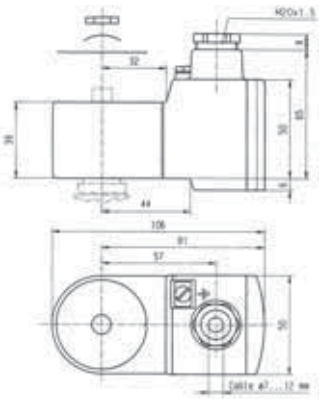

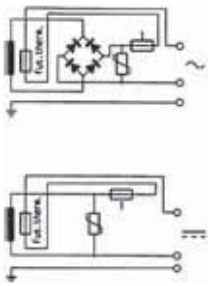

ZONA 0/20

483580 - BOBINE "IS", 32 mm

Queste bobine possono essere montate con tutte le valvole a solenoide ATEX Parker che corrispondono al gruppo di bobine indicato.
Vedere la colonna "Gruppo bobine" nelle pagine delle valvole.

Applicazione: controllo delle valvole a solenoide in aree pericolose in cui è richiesta la protezione a prova di esplosione Ex ia IIC T6.

Vantaggi: gruppo completamento incapsulato composto da una bobina, un indotto in metallo, un circuito a tre diodi e una connettore DIN.
L'incapsulamento fornisce un housing compatto efficace, che offre una protezione totale da polvere, olio, acqua e così via.

Dimensioni ridotte per facilità di montaggio in spazi ristretti.

Riferimento (senza connettore) (con connettore)			483580.01 o DZ12 483960.01 o DZ13
Certificato			LCIE 02 ATEX 6065 X - IECEx LCI 07.0025 X
Gruppo bobine			7.0
Tipo di protezione	Gas		II 1 G - Ex ia IIC - T6
	Polvere		II 1 D - Ex tD A20 - T80°C
Grado di protezione			**IP65** con connettore
Temperatura ambiente			Da -40°C a +55°C La temperatura di esercizio della valvola/bobina può essere limitata da quella della valvola.
Collegamento elettrico			La bobina viene collegata con un connettore 2P+T secondo EN 175301-803 tipo A. Il contatto 1 è contrassegnato come il polo positivo ⊕.
Tensione di alimentazione massima			28 V CC (N7) - 110 mA La tensione di funzionamento minima a 60°C al massimo è 14 V CC.
Assorbimento	CC	Minima	500 mW
		Massima	3 W
			A seconda della tensione applicata, tipo di barriera IS e resistenza del cavo collegato
Resistenza bobina a 20°C Impedenza Induttanza apparente Capacitanza apparente			340 Ω 340 Ω 0 mH 0 µF
Peso			160 g (con connettore)

Per ordinare una bobina, utilizzare il riferimento e il codice di tensione, ad esempio: **483580** per **28 V CC** = **483580N7**

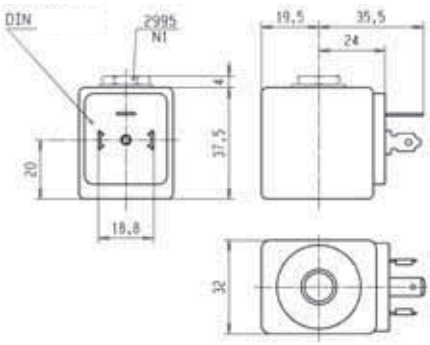

Importante

Il circuito di alimentazione a sicurezza intrinseca deve avere una capacità sufficiente in tutte le condizioni ambientali per garantire una corrente di alimentazione **minima pari a 35 mA** nella bobina.

La corrente di mantenimento minima è 20 mA.

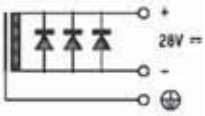

Per la compatibilità della barriera vedere la tabella corrispondente nell'Appendice.

Questa bobina richiede la "housing" : **Ref. 2995**

495910 - MINIWATT - 0.3 W
BOBINE "BOOSTER" "IS", 37 mm

Queste bobine possono essere montate con tutte le valvole a solenoide ATEX Parker che corrispondono al gruppo di bobine indicato.
Vedere la colonna "Gruppo bobine" nelle pagine delle valvole.

Applicazione: controllo delle valvole a solenoide in aree pericolose in cui è richiesta la protezione a prova di esplosione Ex ia IIC da T4 a T6.

Vantaggi: housing orientabile a 360°, in resina rinforzata con fibra di vetro (classe H). La bobina del solenoide, il raddrizzatore (diodi al silicio), i fusibili e la protezione a varistore sono completamente incapsulati nell'housing della bobina con resina epossidica per la protezione antiurto e anticorrosione.

L'housing in plastica viene fornito con un pressacavo M20 x 1.5. Dimensioni ridotte per facilità di montaggio in spazi ristretti.

Riferimento			495910
Certificato			LCIE 03 ATEX 6464 X - IECEx LCI 07.0006 X
Gruppo bobine			8.0
Tipo di protezione	Gas		II 1 G - Ex ia IIB - T6/T5/T4
	Polvere		II 1 D - Ex tD A20 - T80°C/T95°C/T130°C
Grado di protezione			**IP67** secondo gli standard IEC/EN 60529
Temperatura ambiente			Da -40°C a +65°C/+75°C/+80°C L'applicazione è limitata anche dall'intervallo di temperatura della valvola.
Collegamento elettrico			Il collegamento elettrico viene stabilito nella scatola di connessione sul morsetto di un connettore facilmente accessibile. Il cavo (Ø min: 7 mm, Ø max: 11 mm, sezione max: 2.5 mm²) viene collegato alla scatola di connessione tramite il pressacavo M20 x 1.5 integrato.
Tensione di alimentazione massima			28 V CC (N7) - 110 mA
Assorbimento	CC	Minima	0.3 W (con 13 V CC)
		Massima	1.2 W (con 24 V CC)
			A seconda della tensione applicata, tipo di barriera IS e resistenza del cavo collegato
Controllo in linea			4 mA o 5 V CC max
Resistenza bobina a 20°C Impedenza Induttanza apparente Capacitanza apparente			Carica: ~550 Ω - Mantenimento: ~500 Ω 0 mH 0 µF
Tempo di risposta			Da 2 a 3 s
Peso			500 g

Per ordinare una bobina, utilizzare il riferimento e il codice di tensione, ad esempio: **495910** per **28 V CC** = **495910N7**

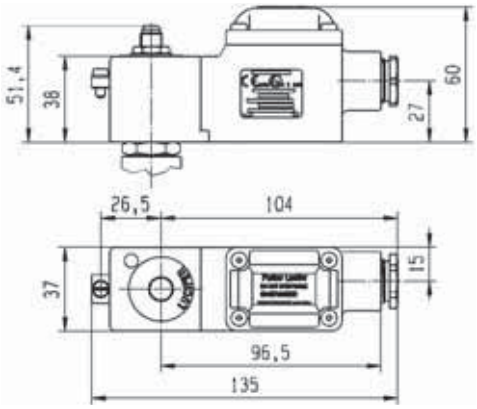

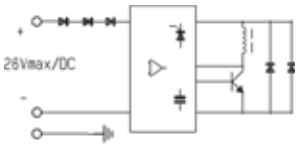

496565 - BOBINE "BOOSTER" "IS", 37 mm

Queste bobine possono essere montate con tutte le valvole a solenoide ATEX Parker che corrispondono al gruppo di bobine indicato.
Vedere la colonna "Gruppo bobine" nelle pagine delle valvole.

Applicazione: controllo delle valvole a solenoide in aree pericolose in cui è richiesta la protezione a prova di esplosione Ex ia IIC da T4 a T6.

Vantaggi: housing orientabile a 360°, in resina rinforzata con fibra di vetro (classe H). La bobina del solenoide, il raddrizzatore (diodi al silicio), i fusibili e la protezione a varistore sono completamente incapsulati nell'housing della bobina con resina epossidica per la protezione antiurto e anticorrosione.

L'housing in plastica viene fornito con un pressacavo M20 x 1.5. Dimensioni ridotte per facilità di montaggio in spazi ristretti.

Riferimento		496565	
Certificato		LCIE 08 ATEX 6071 X - IECEx LCI 08.0030 X	
Gruppo bobine		9.0	
Tipo di protezione	Gas	II 1 G - Ex ia IIC - T6/T5/T4	
	Polvere	II 1 D - Ex ta IIIC - T80°C/T95°C/T130°C	
Grado di protezione		**IP67** secondo gli standard IEC/EN 60529	
Temperatura ambiente		Da -40°C a +65°C/+75°C/+80°C L'applicazione potrebbe essere limitata anche dall'intervallo di temperatura della valvola.	
Collegamento elettrico		Collegamento del cavo tramite un pressacavo in plastica M20 x 1.5 per l'utilizzo di un cavo con un diametro compreso tra 7 mm e 12 mm. Possibilità di aggiungere la messa a terra tramite un morsetto a vite esterno	
Corrente di funzionamento minima		20 mA	
Tensione di funzionamento minima a 60°C		28 V CC (N7)	
Parametri di sicurezza Valori consentiti massimi: Vi (V)/Ii (mA)/Pi (W)		28 V/110 mA /0.77 W 27 V/120 mA/0.81 W 26 V/135 mA/0.88 W 25 V/150 mA/0.94 W 24 V/170 mA/1.02 W	28 V/280 mA/1.96 W 27 V/320 mA/2.16 W 26 V/350 mA/2.27 W 25 V/390 mA/2.43 W 24 V/430 mA/2.58 W
Controllo in linea		4 mA o 5 V CC max	
Impedenza apparente tipica Induttanza apparente Capacitanza apparente		Attrazione: ~600 Ω - Mantenimento: ~570 Ω 0 mH 0 µF	
Tipo di riposta tipico		Da 2 a 4 s	
Peso		500 g	

Per ordinare una bobina, utilizzare il riferimento e il codice di tensione,
ad esempio: **496565** per **13 V CC** = **496565N7**

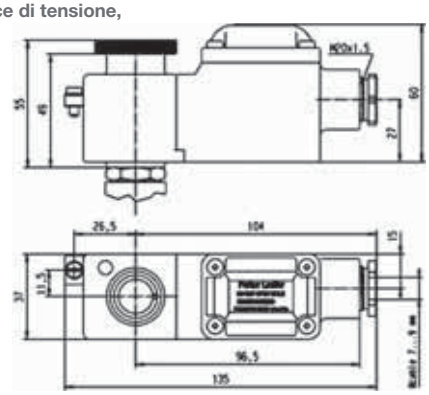

492965 - BOBINE "BOOSTER" "IS", 50 mm

Queste bobine possono essere montate con tutte le valvole a solenoide ATEX Parker che corrispondono al gruppo di bobine indicato.
Vedere la colonna "Gruppo bobine" nelle pagine delle valvole.

Applicazione: controllo delle valvole a solenoide in aree pericolose in cui è richiesta la protezione a prova di esplosione Ex ia o ib IIC T6.

Vantaggi: housing orientabile a 360°, alloggiamento e coperchio in metallo rivestito di epossidica. La bobina, i circuiti elettronici e altri elementi necessari per la sicurezza intrinseca sono completamente incapsulati nell'housing con materiale epossidico per la protezione antiurto e anticorrosione.

Dimensioni ridotte per facilità di montaggio in spazi ristretti.

Riferimento			492965.01 - Fissaggio in acciaio inossidabile 492965.02 - (Fissaggio plastique)
Certificato			LCIE 02 ATEX 6066 X - IECEx LCI 07.0007 X
Gruppo bobine			9.0
Tipo di protezione	Gas		II 1 G - Ex ia IIC - T6
	Polvere		II 1 D - Ex ta IIIC - T80°C
Grado di protezione			**IP66** secondo gli standard IEC/EN 60529
Temperatura ambiente			Da -40°C a +65°C L'applicazione è limitata anche dall'intervallo di temperatura della valvola.
Collegamento elettrico			Collegamento del cavo tramite un pressacavo in plastica o acciaio inossidabile M20 x 1.5 per l'utilizzo di un cavo con un diametro compreso tra 10 mm e 12 mm. Possibilità di aggiungere la messa a terra tramite un morsetto a vite esterno
Tensione di alimentazione massima			28 V CC (N7) - 110 mA
Assorbimento	CC	Minima	0.3 W (con 13 V CC)
		Massima	2.3 W (con 24 V CC)
			A seconda della tensione applicata, tipo di barriera IS e resistenza del cavo collegato
Controllo in linea			4 mA o 5 V CC max
Resistenza bobina a 20°C Impedenza Induttanza apparente Capacitanza apparente			85 Ω 275 Ω (con 13 V CC) - 260 Ω (con 24 V CC) 0 mH 0 µF
Tempo di risposta			Da 2 a 4 s
Peso			500 g

Per ordinare una bobina, utilizzare il riferimento e il codice di tensione, ad esempio: **492965.01** per **28 V CC** = **492965.01N7**

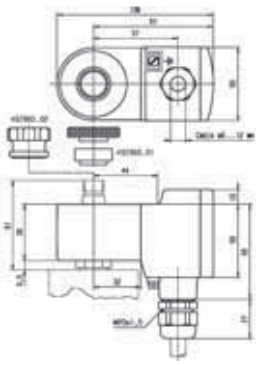

Importante

Il circuito di alimentazione a sicurezza intrinseca deve avere una capacità sufficiente in tutte le condizioni ambientali per garantire una corrente di alimentazione **minima pari a 29 mA nella bobina**.

La corrente di mantenimento minima è 20 mA.

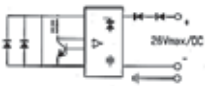

Per la compatibilità della barriera vedere la tabella corrispondente nell'Appendice.

482870.01 E 492335 - BOBINE "NEMA" "IS", 50 mm

Queste bobine possono essere montate con tutte le valvole a solenoide ATEX Parker che corrispondono al gruppo di bobine indicato.
Vedere la colonna "Gruppo bobine" nelle pagine delle valvole.

Applicazione: controllo delle valvole a solenoide in aree pericolose in cui è richiesta la protezione a prova di esplosione Ex ia IIC o IIB T6.

Vantaggi: housing orientabile a 360°, alloggiamento e coperchio in poliamide con fibra di vetro. La bobina, i circuiti elettronici e altri elementi necessari per la sicurezza intrinseca sono completamente incapsulati nell'housing con materiale epossidico per la protezione antiurto e anticorrosione.

Dimensioni ridotte per facilità di montaggio in spazi ristretti.

Riferimento			482870.01	492335
Certificato			LCIE 02 ATEX 6024 X	LCIE/FM/CSA
Gruppo bobine			12.0	
Tipo di protezione	Gas		II 1 G - Ex ia IIC - T6	Cl. I, Div.I, Gr. A, B, C, D Cl. II, Div.I, Gr. E, F, G
	Polvere		II 1 D - Ex ta IIIC - T80°C	
Grado di protezione			**IP66** secondo gli standard IEC/EN 60529	NEMA 4 - 4X
Temperatura ambiente			Da -40°C a +65°C L'applicazione è limitata anche dall'intervallo di temperatura della valvola.	Da -40°C a +60°C
Collegamento elettrico			Collegamento del cavo tramite un pressacavo in acciaio inossidabile M20 x 1.5 per l'utilizzo di un cavo con un diametro compreso tra 10 mm e 12 mm. Possibilità di aggiungere la messa a terra tramite un morsetto a vite esterno	
Tensione di alimentazione massima			28 V CC (N7) - 280 mA	30 V CC (N7) - 100 mA
Assorbimento	CC	Minima	300 mW	
		Massima	3 W	
			A seconda della tensione applicata, tipo di barriera IS e resistenza del cavo collegato	
Resistenza bobina a 20°C Impedenza Induttanza apparente Capacitanza apparente			295 Ω 345 Ω 0 mH 0 µF	
Peso			500 g	

Per ordinare una bobina, utilizzare il riferimento e il codice di tensione, ad esempio: **492335** per **30 V CC** = **492335N7**

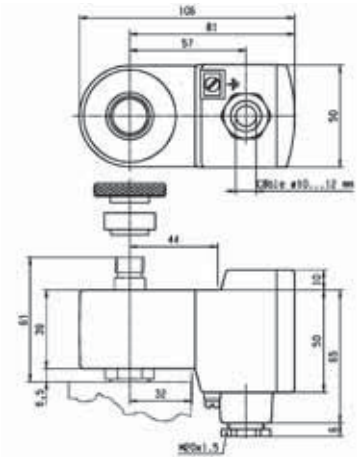

Importante

Il circuito di alimentazione a sicurezza intrinseca deve avere una capacità sufficiente in tutte le condizioni ambientali per garantire una corrente di funzionamento minima superiore a **29 mA** nella bobina.

La corrente di alimentazione minima nella condizione di lavoro è 20 mA.

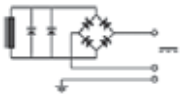

Per la compatibilità della barriera vedere la tabella corrispondente nell'Appendice.

488650.01 E 490885 - BOBINE "NEMA" "IS", 50 mm

Queste bobine possono essere montate con tutte le valvole a solenoide ATEX Parker che corrispondono al gruppo di bobine indicato.

Vedere la colonna "Gruppo bobine" nelle pagine delle valvole.

Applicazione: controllo delle valvole a solenoide in aree pericolose in cui è richiesta la protezione a prova di esplosione Ex ia o ib IIC T6.

Vantaggi: housing orientabile a 360°, alloggiamento e coperchio in poliamide con fibra di vetro. La bobina, i circuiti elettronici e altri elementi necessari per la sicurezza intrinseca sono completamente incapsulati nell'housing con materiale epossidico per la protezione antiurto e anticorrosione.

Dimensioni ridotte per facilità di montaggio in spazi ristretti.

Riferimento			488650.01	490885
Certificato			LCIE 02 ATEX 6024 X	LCIE/FM/CSA
Gruppo bobine			7.0	
Tipo di protezione	Gas		II 1 G - Ex ia IIC - T6	Cl. I, Div.I, Gr. A, B, C, D Cl. II, Div.I, Gr. E, F, G
	Polvere		II 1 D - Ex ta IIIC - T80°C	
Grado di protezione			**IP66** secondo gli standard IEC/EN 60529	NEMA 4 - 4X
Temperatura ambiente			Da -40°C a +65°C La temperatura di esercizio della valvola/bobina può essere limitata da quella della valvola.	Da -40°C a +60°C
Collegamento elettrico			Ingresso del cavo tramite un pressacavo M20 x1.5. Morsetti a vite per cavi 3 x 1.5 mm² max. Possibilità di aggiungere la messa a terra tramite un morsetto a vite esterno	
Tensione di alimentazione massima			28 V CC (N7) - 110 mA La tensione di funzionamento minima a 60°C al massimo è 11.5 V CC.	30 V CC (N7) - 100 mA
Assorbimento	CC	Minima	300 mW	
		Massima	3 W	
			A seconda della tensione applicata, tipo di barriera IS e resistenza del cavo collegato	
Resistenza bobina a 20°C Impedenza Induttanza apparente Capacitanza apparente			295 Ω 345 Ω 0 mH 0 µF	
Peso			500 g	

Per ordine una bobina, utilizzare il riferimento e il codice di tensione, ad esempio: **490885** per **30 V CC** = **490885N7**

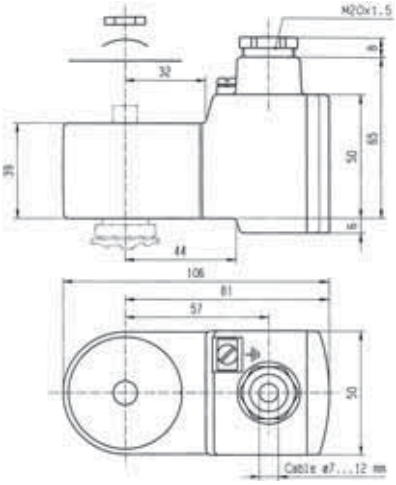

Importante

Il circuito di alimentazione a sicurezza intrinseca deve avere una capacità sufficiente in tutte le condizioni ambientali per garantire una corrente di funzionamento **minima pari a 29 mA nella bobina**.

La corrente di alimentazione minima è 20 mA.

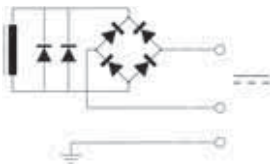

Per la compatibilità della barriera vedere la tabella corrispondente nell'Appendice.

488660.01 E 490890 - BOBINE "NEMA" "IS", 50 mm

Queste bobine possono essere montate con tutte le valvole a solenoide ATEX Parker che corrispondono al gruppo di bobine indicato.
Vedere la colonna "Gruppo bobine" nelle pagine delle valvole.

Applicazione: controllo delle valvole a solenoide in aree pericolose in cui è richiesta la protezione a prova di esplosione Ex ia o ib IIC T6.

Vantaggi: housing orientabile a 360°, alloggiamento e coperchio in metallo rivestito di epossidica. La bobina, i circuiti elettronici e altri elementi necessari per la sicurezza intrinseca sono completamente incapsulati nell'housing con materiale epossidico per la protezione antiurto e anticorrosione.

Dimensioni ridotte per facilità di montaggio in spazi ristretti.

Riferimento			488660.01	490890
Certificato			LCIE 02 ATEX 6024 X	LCIE/FM/CSA
Gruppo bobine			7.0	
Tipo di protezione	Gas		II 1 G - Ex ia IIC - T6	Cl. I, Div.I, Gr. A, B, C, D Cl. II, Div.I, Gr. E, F, G
	Polvere		II 1 D - Ex ta IIIC - T80°C	
Grado di protezione			**IP67** secondo gli standard IEC/EN 60529	NEMA 4 - 4X
Temperatura ambiente			Da -40°C a +65°C La temperatura di esercizio della valvola/bobina può essere limitata da quella della valvola.	+60°C
Collegamento elettrico			Ingresso del cavo tramite un pressacavo M20 x1.5. Morsetti a vite per cavi 3 x 1.5 mm² max. Possibilità di aggiungere la messa a terra tramite un morsetto a vite esterno	
Tensione di alimentazione massima			28 V CC - 110 mA (N7) La tensione di funzionamento minima a 60°C al massimo è 11.5 V CC.	30 V CC - 100 mA (N7)
Assorbimento	CC	Minima	300 mW	
		Massima	3 W	
			A seconda della tensione applicata, tipo di barriera IS e resistenza del cavo collegato	
Resistenza bobina a 20°C Impedenza Induttanza apparente Capacitanza apparente			295 Ω 345 Ω 0 mH 0 µF	
Peso			500 g	

Per ordinare una bobina, utilizzare il riferimento e il codice di tensione, ad esempio: **490890** per **30 V CC** = **490890N7**

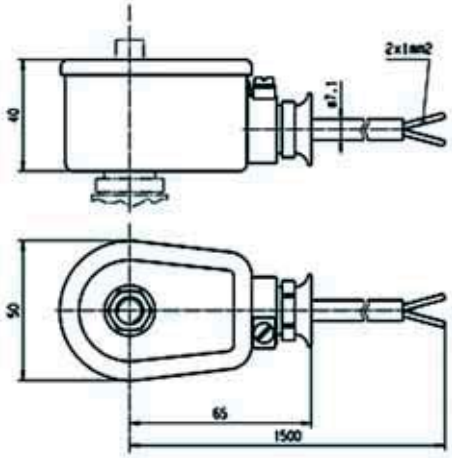

Importante

Il circuito di alimentazione a sicurezza intrinseca deve avere una capacità sufficiente in tutte le condizioni ambientali per garantire una corrente di funzionamento minima superiore a **29 mA** nella bobina.

La corrente di alimentazione minima nella condizione di lavoro è 20 mA.

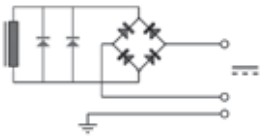

Per la compatibilità della barriera vedere la tabella corrispondente nell'Appendice.

488670.01 - BOBINE "IS", 50 mm

Queste bobine possono essere montate con tutte le valvole a solenoide ATEX Parker che corrispondono al gruppo di bobine indicato.
Vedere la colonna "Gruppo bobine" nelle pagine delle valvole.

Applicazione: controllo delle valvole a solenoide in aree pericolose in cui è richiesta la protezione a prova di esplosione Ex ia o ib IIC T6.

Vantaggi: housing orientabile a 360°, alloggiamento e coperchio in metallo rivestito di epossidica. La bobina, i circuiti elettronici e altri elementi necessari per la sicurezza intrinseca sono completamente incapsulati nell'housing con materiale epossidico per la protezione antiurto e anticorrosione.

Dimensioni ridotte per facilità di montaggio in spazi ristretti.

Riferimento			488670.01
Certificato			LCIE 02 ATEX 6024 X
Gruppo bobine			7.0
Tipo di protezione	Gas		II 1 G - Ex ia IIC - T6
	Polvere		II 1 D - Ex ta IIIC - T80°C
Grado di protezione			**IP65** secondo gli standard IEC/EN 60529
Temperatura ambiente			Da -40°C a +65°C La temperatura di esercizio della valvola/bobina può essere limitata da quella della valvola.
Collegamento elettrico			Ingresso del cavo tramite un pressacavo M20 x1.5. Morsetti a vite per cavi 3 x 1.5 mm² max. Possibilità di aggiungere la messa a terra tramite un morsetto a vite esterno
Tensione di alimentazione massima			28 V CC (N7) - 110 mA La tensione di funzionamento minima a 60°C al massimo è 11.5 V CC.
Assorbimento	CC	Minima	300 mW
		Massima	3 W
			A seconda della tensione applicata, tipo di barriera IS e resistenza del cavo collegato
Resistenza bobina a 20°C Impedenza Induttanza apparente Capacitanza apparente			295 Ω 345 Ω 0 mH 0 µF
Peso			500 g

Per ordinare una bobina, utilizzare il riferimento e il codice di tensione, ad esempio: **488670.01** per **28 V CC** = **488670.01N7**

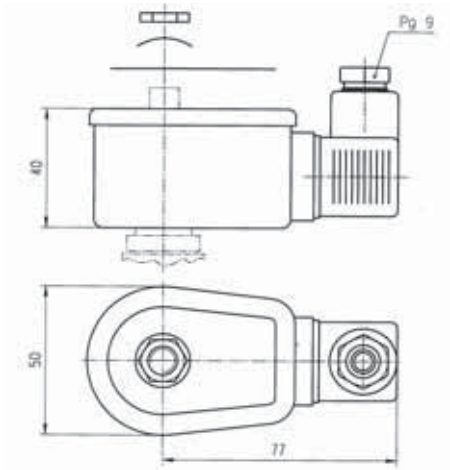

Importante

Il circuito di alimentazione a sicurezza intrinseca deve avere una capacità sufficiente in tutte le condizioni ambientali per garantire una corrente di funzionamento minima superiore a **29 mA** nella bobina.

La corrente di alimentazione minima nella condizione di lavoro è 20 mA.

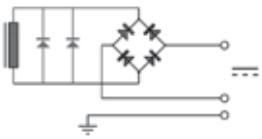

Per la compatibilità della barriera vedere la tabella corrispondente nell'Appendice.

SOMMARIO

INTRODUZIONE

Indice per componenti elettrici a prova di esplosione 442
Elenco dei gruppi di bobine 443

BOBINE

Bobine per collegamento con connettore DIN 446
Bobine con cavi uscenti 469
Bobine con morsetto a vite 474
Bobine con connettore DIN ISO 481

COMPONENTI ELETTRICI A PROVA DI ESPLOSIONE

Livello di protezione "nAc nCc" 484
Livello di protezione "db" 492
Livello di protezione "mb" 494
Livello di protezione "db mb" 499
Livello di protezione "eb" 504
Livello di protezione "eb mb" 505
Livello di protezione "ia" 508

HOUSING 518

ACCESSORI PER BOBINE 522

AMBIENTI ESPLOSIVI 524

APPENDICI DELLE BOBINE

Diagramma di guida per barriere IS 534

HOUSING

4270

HOUSING STANDARD PER BOBINA CON MORSETTI A VITE

Housing standard

Riferimento	4270
Materiale	Acciaio rivestito di epossidica con trattamento di cataforesi
Grado di protezione	**IP** secondo IEC/EN 60529 **IP10** con condotto rinforzato **IP44** con pressacavo
Collegamento elettrico	Può essere realizzato con un condotto rinforzato o un pressacavo M12 x 1.5. Le parti 484092 e 484093 devono essere ordinate separatamente. Messa a terra tramite una vite M3 sull'interno della piastra di base dell'alloggiamento.
Peso	120 g

Vantaggi

Questo housing metallico rappresenta la protezione ideale da urti e corrosione. Orientabile a 360°, è facile da montare in spazi ristretti con un singolo dado. Pesa poco e semplifica l'adeguamento dell'apparecchiatura esistente ad altri requisiti.

Applicazione

La maggior parte delle valvole Lucifer® può essere fissata con questo housing standard e può essere montata con diversi gruppi di bobine Lucifer® compatibili.

Bobine compatibili

- **481000 - Bobina standard**
  8 W Classe F (155°C)
- **483520 - Bobina a doppia frequenza**
  9 W Classe F (155°C)
- **481044 - Bobina a potenza elevata standard**
  14 W Classe F (155°C)
- **485100 - Bobina a temperatura elevata standard**
  8 W Classe H (180°C)
- **486265 - Bobina a temperatura e potenza elevate**
  14 W Classe H (180°C)

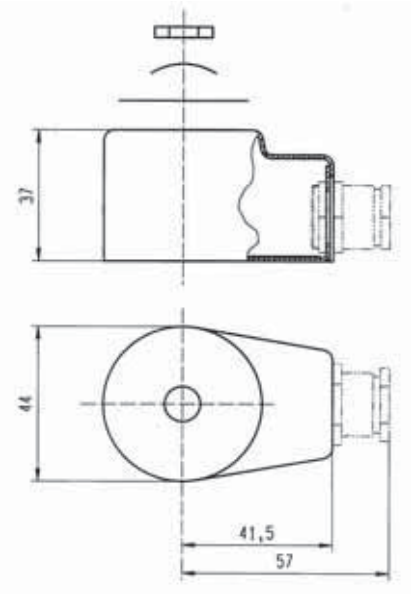

HOUSING

4269 HOUSING PER BOBINE BISTABILI (A IMPULSI)

Housing per bobina bistabile

Riferimento	4269
Materiale	Acciaio rivestito di epossidica
Grado di protezione	**IP** secondo IEC/EN 60529 **IP10** con condotto rinforzato **IP44** con pressacavo
Collegamento elettrico	Può essere realizzato con un condotto rinforzato o un pressacavo M12 x 1.5. Le parti 484092 e 484093 devono essere ordinate separatamente. Messa a terra tramite una vite M3 sull'interno della piastra di base dell'alloggiamento.
Peso	120 g

Vantaggi

Questo housing metallico rappresenta la protezione ideale da urti e corrosione. Orientabile a 360°, è facile da montare in spazi ristretti con un singolo dado. Pesa poco e semplifica l'adeguamento dell'apparecchiatura esistente ad altri requisiti.

Applicazione

Questo housing è stato specificamente progettato per le bobine del gruppo 706 e può essere montato solo con valvole controllate da impulsi elettrici.

Bobine compatibili

- **484990 - Bobina a impulsi per CA**
  11 W Classe F (155°C)
- **485400 - Bobina a impulsi per CC**
  13 W Classe F (155°C)

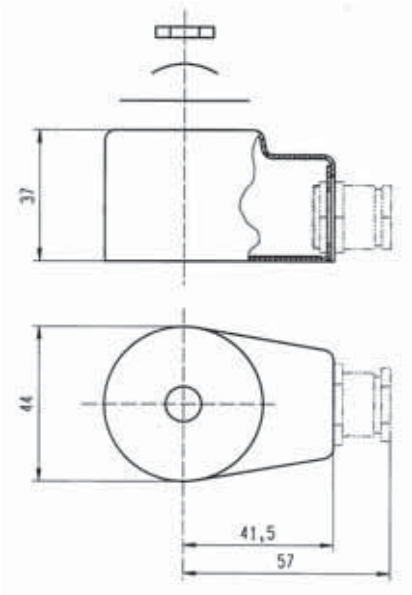

HOUSING

4538

HOUSING IMPERMEABILE E ANTIPOLVERE

Alloggiamento impermeabile

Riferimento	4538
Materiale	Acciaio passivato galvanizzato
Grado di protezione	**IP** secondo IEC/EN 60529 **IP67** con pressacavo
Collegamento elettrico	Collegamento del cavo tramite un pressacavo M20 x 1.5 secondo DIN 46320. I cavi con un diametro esterno compreso tra 6.5 mm e 13.5 mm possono essere collegati tramite un pressacavo in gomma con anelli di tenuta elastici. L'housing è dotato internamente ed esternamente di morsetti a vite per la messa a terra.
Peso	180 g

Vantaggi

Questo housing è antipolvere e impermeabile. Corrisponde al grado di protezione internazionale IP67 secondo IEC/EN 60529. Questo housing in metallo anticorrosione offre un'ottima protezione della bobina dagli urti e da altre influenze esterne. Orientabile a 360°, è facile da montare in spazi ristretti. L'accesso ai morsetti a vite è facile. Si può montare con un solo dado, è leggero e semplifica l'adeguamento dell'apparecchiatura elettrica esistente ad altri requisiti senza interrompere il passaggio di fluidi nella valvola.

Applicazione

Questo housing può essere dotato di diverse bobine del nostro programma, ad esempio le bobine standard, a doppia frequenza e a sgancio elettromagnetico.

Bobine compatibili

- **481000 - Bobina standard**
  8 W Classe F (155°C)
- **483520 - Bobina a doppia frequenza**
  9 W Classe F (155°C)
- **484990 - Bobina a impulsi per CA**
  11 W Classe F (155°C)
- **485400 - Bobina a impulsi per CC**
  13 W Classe H (180°C)

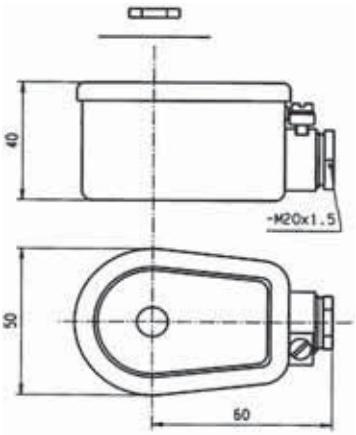

HOUSING

8520

HOUSING IMPERMEABILE PER BOBINE A TEMPERATURA ELEVATA

Housing impermeabile

Riferimento	8520
Materiale	Acciaio passivato galvanizzato
Grado di protezione	**IP** secondo IEC/EN 60529 **IP67** con pressacavo
Collegamento elettrico	Collegamento del cavo tramite un pressacavo M20 x 1.5 secondo gli standard europei. I cavi con un diametro esterno compreso tra 6.5 mm e 13.5 mm possono essere collegati tramite un pressacavo in gomma con anelli di tenuta elastici. L'housing è dotato internamente ed esternamente di morsetti a vite per la messa a terra.
Peso	180 g

Vantaggi

Questo housing è antipolvere e impermeabile. Corrisponde al grado di protezione internazionale IP67 secondo IEC/EN 60529. Questo housing in metallo anticorrosione offre un'ottima protezione della bobina dagli urti e da altre influenze esterne. Orientabile a 360°, è facile da montare in spazi ristretti. L'accesso ai morsetti a vite è facile. Si può montare con un solo dado, è leggero e semplifica l'adeguamento dell'apparecchiatura elettrica esistente ad altri requisiti senza interrompere il passaggio di fluidi nella valvola.

Applicazione

La maggior parte delle valvole Lucifer® può essere fissata con questo housing e montato con diverse bobine Lucifer® compatibili a temperatura elevata (14 W, 8 W, Classe F o H).

Bobine compatibili

- **481044 - Bobina a potenza elevata**
  14 W Classe F (155°C)
- **486265 - Bobina a potenza elevata**
  14 W Classe H (180°C)
- **485100 - Bobina a temperatura elevata**
  8 W Classe H (180°C)

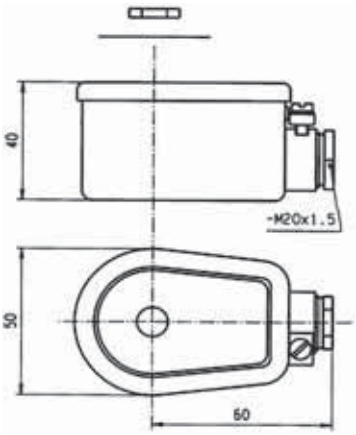

22 mm
32 mm

KIT PER BOBINE

KIT PER BOBINE DA 22 mm

Il kit per bobine corrisponde al sistema di numerazione per gli housing delle valvole Lucifer® (valvola - housing - bobina - tensione).

È composto da una targa su cui sono riportati i dettagli del tipo di valvola, una rondella e un dado per fissare la bobina da 22 mm alla valvola.

Attenzione: questi kit per bobine da 22 mm non sono adatti alle valvole a flusso elevato. Per il kit appropriato rivolgersi al distributore.

KIT DI 100 PEZZI

Codice	Specifica	Applicazione
488993.50	Standard, targa in alluminio, rondella e dado passivati, indicazione di pressione in [bar]	Valvole standard

KIT PER BOBINE DA 32 mm

Il kit per bobine corrisponde all'"housing" del sistema di numerazione delle valvole Lucifer® (valvola - housing - bobina - tensione).

È composto da una targa su cui sono riportati i dettagli del tipo di valvola, una rondella rotonda e un dado per fissare la bobina da 32 mm alla valvola.

KIT DI 100 PEZZI

Codice	Specifica	Applicazione
482995.50	Standard, targa in alluminio, rondella e dado in ferro passivato, indicazione di pressione in [bar]	Valvole standard

ACCESSORI

CONNETTORE DIN SECONDO EN 175301-803, TIPO B

No. 481043 per Parker Lucifer bobine
No. 600040 per Parker bobine

Collegamento elettrico adatto a tutte le bobine da 22 mm
(ad esempio, 488980 e 481180)

CONNETTORE DIN SECONDO EN 175301-803, TIPO A

N. 486586 per versione standard
N. 492645 per versione a temperatura elevata
No. 600004 per versione Parker

Collegamento elettrico adatto a tutte le bobine da 32 mm
(ad esempio, 481865 e 492425)

KIT IN ACCIAIO INOSSIDABILE

Dado N. 482213 M14 X 1 + Anello N. 482214 +
O-Ring N. 483917

Kit per bobine per componenti elettrici offshore
(ad esempio, 482870.01, 492210, 492965.01, 496565, 496700)

DADO IN PLASTICA CON INSERTO IN METALLO

N. 8886

Per componenti elettrici per OIL & GAS
(ad esempio, 492965.01)

PRESSACAVO

N. 492398 - PG 13.5 - Ex eb II
N. 493841 - M20 X 1.5 - Ex ia IIC

Collegamento elettrico e cavo con un diametro compreso tra 6 mm e 12 mm
per componenti elettrici approvati "eb mb" o "ia"
(ad esempio, 492190, 492965...)

PRESSACAVO

N. 493426 - 1/2"-14 NPT

Collegamento elettrico e cavo con un diametro compreso tra 6 mm e 12 mm
per componenti elettrici approvati antideflagranti
(ad esempio, 493640)

INTRODUZIONE

Le normative europee correnti relative all'apparecchiatura elettrica destinata all'utilizzo in ambienti potenzialmente esplosivi si basano sulle direttive europee facoltative e parziali che richiedono la modifica regolare sotto forma di direttive di applicazione o adattamento per mantenere il passo con gli sviluppi tecnici.

Il testo europeo di base in questo campo, ovvero la direttiva **76/117/CEE**, che prevede la libera circolazione delle merci nell'Unione Europea, fornisce il quadro generale delle normative attuali.

L'apparecchiatura elettrica destinata all'utilizzo in ambienti potenzialmente esplosivi è certificata da un ente approvato dal governo quando soddisfa gli standard europei rilevanti (EN 60079-0 e successivi) che coprono ogni tipo di protezione (**db, ia, eb, m, p,** ecc.). Tale apparecchiatura viene quindi distribuita con un **attestato di certificazione CE** e su di essa viene apposto il marchio distintivo.

Questo marchio consente di commerciare all'interno dell'Unione Europea e a volte oltre i confini.

Nonostante i numerosi vantaggi, presenta alcuni difetti, in particolare una mancanza di flessibilità e l'assenza di un concetto di sicurezza globale. Il testo dell'attestato è stato completamente rivisto nella **nuova direttiva europea 94/9/CEE dal 23 marzo 1994**.

Gli attestati di certificazione CE secondo le norme armonizzate ottenuti conformemente alle direttive precedenti sono validi fino al 30 giugno 2003. La loro validità è tuttavia limitata alla conformità alle norme armonizzate indicate in tali direttive.

PAESI MEMBRI DELL'UNIONE EUROPEA

DEFINIZIONI

AMBIENTI ESPLOSIVI

Miscela, in condizioni atmosferiche, di aria con sostanze infiammabili allo stato di gas, vapori, nebbie o polveri nella quale, dopo l'innesco, la combustione si propaga all'insieme della miscela non bruciata.

AREE PERICOLOSE

Un'area pericolosa è un'area in cui esiste un'atmosfera esplosiva o potenzialmente esplosiva a causa della presenza di quantità di gas tali da richiedere l'adozione di precauzioni speciali per la costruzione, l'installazione e l'utilizzo di apparecchi elettrici.

INGREDIENTI PER UN'ESPLOSIONE

- Quando sostanze combustibili si mescolano con l'aria, si produce una miscela esplosiva. Pertanto dove vengono maneggiate queste sostanze pericolose esiste un rischio di esplosione. Questa è la condizione tipica che si rileva sia negli impianti chimici più grandi sia nelle stazioni di servizio più piccole.
- Oggi, a causa dell'uso di strumentazione elettronica ed elettrica nel controllo del processo, il rischio di combustione dovuto a energia elettrica è aumentato notevolmente.
- Per prevenire la combustione di queste sostanze pericolose e proteggere il personale e l'apparecchiatura costosa, è necessario adottare alcune precauzioni speciali. Di seguito sono riportate le condizioni favorevoli all'innesco di miscele esplosive.

Tre condizioni sono sufficienti a innescare un'esplosione

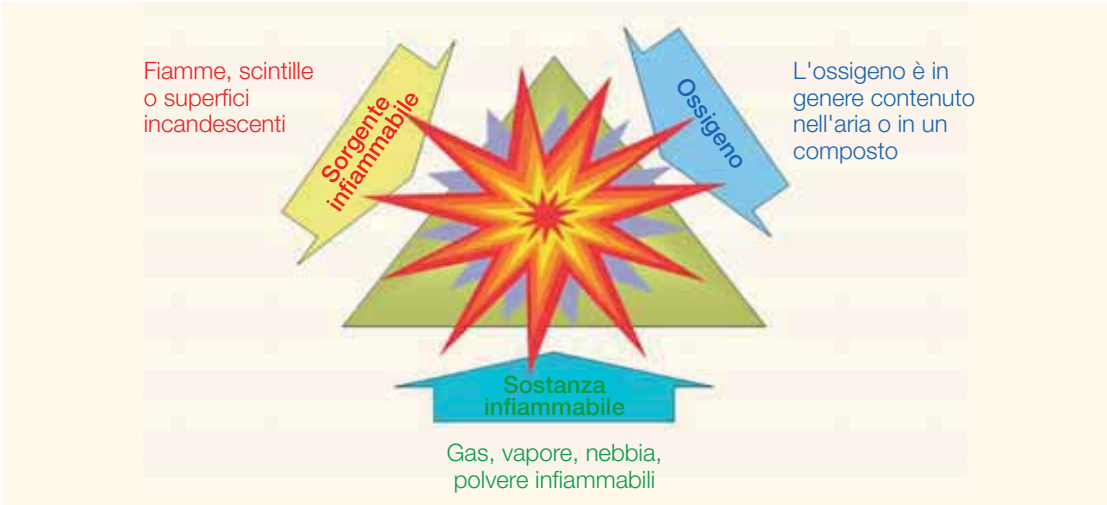

DEFINIZIONI

ZONE

Le aree pericolose sono classificate in zone in base alla frequenza di occorrenza e alla durata di un ambiente con gas esplosivo come descritto di seguito.

Zona 0 (20)	Zona 1 (21)	Zona 2 (22)
Area in cui un'atmosfera con **gas (polvere)** esplosiva è presente continuamente o per lunghi periodi (~1.000 ore all'anno). Modalità di protezione: **ia** - **ma** - **px…**	Area in cui è probabile che si formi un'atmosfera con **gas (polvere)** esplosiva in condizioni di funzionamento normali (da ~10 a 999 ore all'anno). Modalità di protezione: **db** - **eb** - **ib** - **mb** - **px…**	Area in cui è improbabile che si formi un'atmosfera con **gas (polvere)** esplosiva e, nel caso in cui si formi, esiste solo per un breve periodo (da ~1 a 10 ore all'anno). Modalità di protezione: **n** - **mc** - **ic** - **pz…**

CLASSIFICAZIONE DEI LUOGHI PERICOLOSI

Ambiente esplosivo	Presenza continua	Presenza intermittente (condizioni di funzionamento normali)	Presenza occasionale (funzionamento anormale)
IEC	**Zona 0** (gas) **Zona 20** (polvere)	**Zona 1** (gas) **Zona 21** (polvere)	**Zona 2** (gas) **Zona 22** (polvere)
Europa	**Zona 0** (gas) **Zona 20** (polvere)	**Zona 1** (gas) **Zona 21** (polvere)	**Zona 2** (gas) **Zona 22** (polvere)
Canada (CEC)[1] USA (NEC)[2]	**Cl. I Div. 1** (gas) **Cl. II Div. 1** (polvere) **Cl. III Div. 1** (fibre)	**Cl. I Div. 1** (gas) **Cl. II Div. 1** (polvere) **Cl. III Div. 1** (fibre)	**Cl. I Div. 2** (gas) **Cl. II Div. 2** (polvere) **Cl. III Div. 2** (fibre)

[1](CEC): Code Canadien d'Electricité/[2](NEC): National Electrical Code

Esempio:

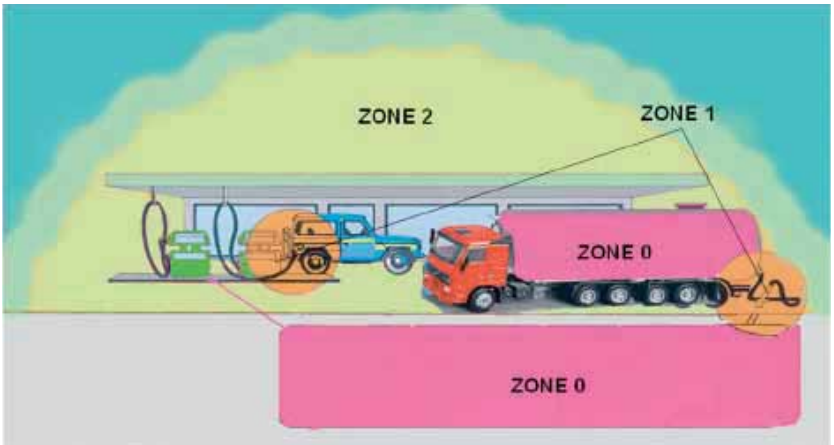

DEFINIZIONI

CLASSIFICAZIONE DEI LUOGHI PERICOLOSI

Categoria	Protezione da guasti	Atmosfera	Zona	Esempio di protezioni
Attestato di certificazione CE di organismo accreditato ⟶ Allegato III				
1 Livello altissimo	2 tipi di protezione o 2 guasti indipendenti	**G** (gas)	**0**	"ia", "ma", "px" o "ia-ma", "db/eb"
		D (polvere)	**20**	
Attestato di certificazione CE di organismo accreditato ⟶ Allegato III				
2 Livello alto	1 tipo di protezione	**G** (gas)	**1**	1 tipo di protezione
	Malfunzionamento frequente e abituale	**D** (polvere)	**21**	Ib, db, mb, eb, py, o…
Ispezione di produzione interna ⟶ Dichiarazione di conformità CE				
3 Normale	Livello di protezione obbligatorio	**G** (gas)	**2**	n, ic, pz… A, C, L, P, R
		D (polvere)	**22**	

Classificazione dei luoghi pericolosi

Gruppo	Riferimento gas
I	Metano
IIA	Propano
IIB	Etilene
IIC	Idrogeno/Acetilene

Gruppo	Riferimento polvere
-	-
IIIA	Fibra
IIIB	Polvere non conduttive
IIIC	Polvere conduttive

Classi di temperatura superficie

Classe temperatura	Temperatura max
T1	450°C
T2	300°C
T3	200°C
T4	135°C
T5	100°C
T6	85°C

°C: 600, 500, 400, 300, 200, 100, 0

Gas e temperatura di accensione		
560°C	Idrogeno	T1
537°C	Metano	T1
425°C	Etilene	T2
305°C	Acetilene	T2
210°C	Kerosene	T3
160°C	Etere etilico	T4
95°C	Solfuro di carbonio	T6

MODALITÀ DI PROTEZIONE USATA DA PARKER LUCIFER®

MODALITÀ DI PROTEZIONE

Concetto	Codice		Zone	
	Gas	Polvere	Gas	Polvere
Involucro antideflagrante	**db**	**tb**	1/2	21/22
Incapsulamento	ma / **mb** / mc	**tb** / tc	0/1/2	20/21/22
Sicurezza aumentata	**eb**	-	1/2	-
Sicurezza intrinseca	**ia** / ib / ic	**ta** / tb / tc	0/1/2	20/21/22
Apparecchi pressurizzati	**pxb** / py / pz	pD	1/2	21/22
Apparecchio cat. concetto 3	**nA** nL nR **nC**	- - - -	2 2 2 2	- - - -

Tipi di protezione offerta da Parker FCDE sono rossi.

STANDARD E TIPO DI PROTEZIONE

APPARECCHI PER ATMOSFERA CON GAS ESPLOSIVE GRUPPO DI APPARECCHIATURE II

EPL	Standard EN/IEC	Protezione	Titolo
	60079-0	-	Requisiti generali
Ga	60079-11	**ia**	Sicurezza intrinseca
	60079-18	ma	Incapsulamento
	60079-26		Apparecchiatura con un livello di protezione Ga (Zona 0)
	60079-28	op is	Protezione di apparecchiatura e sistemi di trasmissione che usano radiazioni ottiche
Gb	60079-1	**db**	Involucri antideflagranti
	60079-2	p, **pbx**, py	Involucri pressurizzati
	60079-5	q	Riempimento polverulento
	60079-6	o	Immersione in olio
	60079-7	**eb**	Sicurezza aumentata
	60079-11	**ib**	Sicurezza intrinseca
	60079-18	**mb**	Incapsulamento
	60079-25		Sistemi intrinsecamente sicuri
	60079-27		Modello di sicurezza intrinseca dei fieldbus (FISCO)
	60079-28	op is op pr op sh	Protezione di apparecchiatura e sistemi di trasmissione che usano radiazioni ottiche
Gc	60079-11	Ic	Sicurezza intrinseca
	60079-18	mc	Incapsulamento
	60079-15	**nA**	Antiscintillamento
	60079-15	nR	Involucro a respirazione limitata
	60079-15	nL	Energia limitata (solo versione precedente)
	60079-15	**nC**	Apparecchiatura che produce scintille durante il funzionamento
	60079-2	pz	Involucri pressurizzati
	60079-27		Modello di sicurezza intrinseca dei fieldbus (FISCO)
	60079-28	op is op pr op sh	Protezione di apparecchiatura e sistemi di trasmissione che usano radiazioni ottiche

EPL = Equipement **P**rotection **L**evel

Tipi di protezione offerta da Parker FCDE sono rossi.

STANDARD E TIPO DI PROTEZIONE

APPARECCHIATURA ELETTRICA PER L'USO IN AREE CON POLVERE INFIAMMABILE - GRUPPO DI APPARECCHIATURE III

EPL	Standard EN/IEC	Protezione	Titolo
	60079-0	-	Requisiti generali
Da	60079-31	ta	Protezione tramite involucro
	60079-11	ia	Protezione tramite sicurezza intrinseca (iaD IEC/EN 61241-11)
	61241-18	ma	Protezione tramite incapsulamento
Db	60079-31	tb	Protezione tramite involucro
	60079-11	ib	Protezione tramite sicurezza intrinseca (ibD IEC/EN 61241-11)
	60079-18	mb	Protezione tramite incapsulamento
	IEC 61241-4	pD	Tipo di protezione "pD"
Dc	60079-31	tc	Protezione tramite involucro
	60079-11	ic	Protezione tramite sicurezza intrinseca
	60079-18	mc	Protezione tramite incapsulamento
	IEC 61241-4	pD	Tipo di protezione "pD"

EPL = Equipement **P**rotection **L**evel

Tipi di protezione offerta da Parker FCDE sono rossi.

APPARECCHIATURA NON ELETTRICA PER L'USO IN ATMOSFERA POTENZIALMENTE ESPLOSIVA

Standard	Protezione	Titolo
EN 13463-1	-	Metodo e requisiti di base
EN 13463-2	fr	Protezione tramite involucro flusso-restringente
EN 13463-3	db	Protezione tramite involucro antideflagrante
EN 13463-5	c	Protezione tramite sicurezza di costruzione
EN 13463-6	b	Protezione tramite controllo della sorgente di accensione
EN 13463-7	p	Protezione tramite involucro pressurizzato
EN 13463-8	k	Protezione tramite immersione in liquido

ZONE E LIVELLO DI PROTEZIONE DELL'APPARECCHIATURA (EPL)

Gas		Polvere	
Zona	EPL	Zona	EPL
0	Ga	**20**	Da
1	Ga e Gb	**21**	Da e Db
2	Ga, Gb e Gc	**22**	Da, Db e Dc

CATEGORIE E LIVELLO DI PROTEZIONE DELL'APPARECCHIATURA (EPL)

Categorie	Gas	Polvere	Sicurezza
1	Ga	Da	Molto alta
2	Gb	Db	Alta
3	Gc	Dc	Normale

ESEMPI DI MARCATURA

APPARECCHIATURA ELETTRICA PER ATMOSFERA CON GAS ESPLOSIVE GRUPPO DI APPARECCHIATURE II

Tipo di protezione

Ex db IIC T5 Gb

Gruppi apparecchiature (polvere)	
IIA	Acetone, etano, benzene, benzina, butano, propano, metano
IIB	Etilene, gas di città
IIC	Idrogeno, acetilene

Classe temperatura	Temperatura accensione di gas o vapore	Temperatura superficie consentita massima per superfici permanentemente calde
T1	> 450°C	440°C
T2	> 300°C	290°C
T3	> 200°C	195°C
T4	> 135°C	130°C
T5	> 100°C	95°C
T6	> 85°C	80°C

Zona	Livello di protezione apparecchiatura (EPL)
0	Ga
1	Gb e Ga
2	Gc, Gb e Ga

APPARECCHIATURA ELETTRICA PER L'USO IN AREE CON POLVERE INFIAMMABILE - GRUPPO DI APPARECCHIATURE III

Tipo di protezione

Temperatura superficie max

Ex tb IIIC T95°C Db

Gruppi apparecchiature (polvere)	
IIIA	Fibre
IIIB	Polvere non conduttrice
IIIC	Polvere conduttrice

Zona	Livello di protezione apparecchiatura (EPL)
20	Da
21	Db e Da
22	Dc, Db e Da

LA DIRETTIVA (94/9/CEE - 1994-03-23)

LA DIRETTIVA (94/9/CEE - 1994-03-23)

In conformità con il "**nuovo approccio**", la nuova direttiva getta le basi per un'armonizzazione totale delle normative che riguardano questo settore.

Non fa riferimenti diretti agli standard, ma definisce i requisiti di salute e sicurezza essenziali che devono essere soddisfatti e introduce la marcatura **CE**.

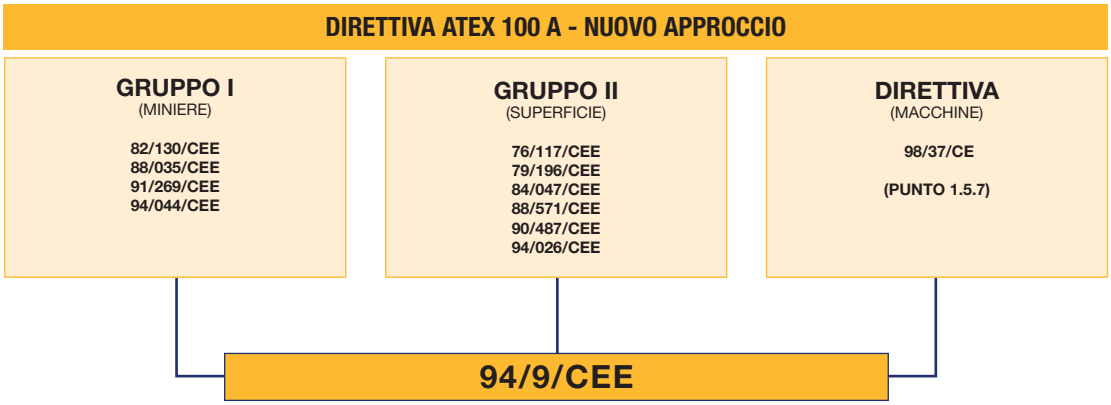

STRUTTURA DELLA DIRETTIVA

I principi fondamentali della nuova direttiva possono essere riepilogati nel modo seguente.

- Si applica all'apparecchiatura **elettrica** e **non elettrica**.
- Definisce i **requisiti di salute e sicurezza** fondamentali.
- Considera **tutti i rischi potenziali** che l'apparecchiatura può causare, in particolare a livello di progettazione e produzione.
- **La stessa direttiva** si applica sia alle **miniere** grisutose **sia alle superfici**.
- Sottolinea l'importanza **dell'utilizzo dell'apparecchiatura in conformità allo scopo**.
- Riconosce lo European Standards Committee **CEN** e lo European Committee for Electrotechnical Standardisation **CENELEC** come organismi competenti per la definizione degli standard armonizzati richiesti.
- Fornisce la **manodopera e la gestione**.
- Definisce le **procedure per la valutazione della conformità** ai requisiti essenziali, sulla base di moduli che consentono di determinare quali apparecchiature possono avere il marchio di conformità **CE**.

APPLICAZIONI

La direttiva si applica al settore industriale e concerne le apparecchiature seguenti:

- **Apparecchiatura** (macchine, apparecchi, ecc.)
- **Sistemi di protezione** (dispositivi di scarica, dispositivi antiesplosione, ecc.)
- **Componenti** (parti prive di una funzione autonoma, morsetti, ecc.)
- **Dispositivi di sicurezza, di comando e di regolazione destinati** all'uso all'esterno di ambienti potenzialmente esplosivi, ma necessari per la sicurezza in caso di esplosione (relé, barriere, interruttori di pressione, termostati, ecc.)

LA DIRETTIVA
(94/9/CEE - 1994-03-23)

ESCLUSIONI DALLA PORTATA DELLA NUOVA DIRETTIVA

L'apparecchiatura seguente non rientra nella portata della nuova direttiva.

- Dispositivi medici destinati all'uso in ambiente medico.
- Apparecchiatura e sistemi di protezione relativi solo al rischio di esplosione di sostanze chimiche instabili (esplosivi, ecc.).
- Apparecchiatura destinata all'uso in ambiente domestici e non commerciali.
- Dispositivi di protezione individuale coperti dalla direttiva 89/686/CEE.
- Navi e unità offshore mobili.
- Mezzi di trasporto, a eccezione dei veicoli destinati all'uso in ambienti potenzialmente esplosivi.

DATE DI APPLICAZIONE

DIRETTIVA ATEX 100A - NUOVO APPROCCIO	
94/9/CEE	
Date di applicazione	
• Trasposizione nella legge nazionale	1/9/1995
• Applicazione (facoltativa)	1/3/1996
• Applicazione (totale)	1/7/2003

SORGENTI DI ACCENSIONE POTENZIALI E ALTRI RISCHI DA CONTROLLARE

Quanto riportato di seguito rappresenta un potenziale pericolo.

- Varie sorgenti di accensione, ad esempio scintille, fiamme, archi elettrici, temperatura di superficie elevata, energia acustica, radiazione ottica oppure onde elettromagnetiche.
- Elettricità statica.
- Operazioni di compensazione della pressione.
- Disturbi da sorgenti esterne, ad esempio condizioni ambientali mutevoli, tensione estranea, umidità, vibrazione o contaminazione.

Sono inoltre previsti alcuni requisiti specifici per i dispositivi destinati a garantire una maggiore protezione dell'apparecchiatura.

Analizzare attentamente questi requisiti per valutare l'affidabilità operativa di tali dispositivi e la loro interazione con altri componenti collegati con l'apparecchiatura.

TABELLA PER BARRIERE IS

Produttore	Riferimento	Ex	Componenti elettrici standard IS							Componenti elettrici booster IS		
			EX IA IIC T6 488650.01/02 488660.01 488670.01 LCIE/AUS	Ex ia IIC T6 490885 490890 (490895) LCIE/FM/CSA	Ex ia IIC T6 483580.01/03 483960.01/03 LCIE/AUS	Ex ia 490880 (493997) LCIE/FM/CSA	Ex ia IIB T6 482160.01 LCIE	Ex ia IIC T6 482870.01 LCIE	Ex ia 492335 LCIE/FM/CSA	Ex ia IIC T6 492965.01/02 LCIE	Ex ia IIC T6 496565 LCIE	Ex ia IIC T6 495910 LCIE
A puissance 3	NAEV 22-140	ia	●	-	●	-	●	●	-	●	●	●
	NAEV 26-100	ia	●	-	●	-	●	●	-	●	●	●
ABB	V171132-54	ib	●	-	●	-	●	●	-	●	●	●
	V171132-55	ib	●	-	-	-	●	●	-	●	●	●
	V171132-61	ia	●	-	-	-	●	●	-	●	●	●
	DO 890	ib	●	-	●	-	●	●	-	●	●	●
	S900-DO4-EX	ib	●	-	●	-	●	●	-	●	●	●
BRADLEY	FEX-EX 24V	ia	●	●	●	●	●	●	-	●	●	●
COOPER	LB 2101	ia	●	●	●	●	●	●	●	●	●	●
	LB 2105	ia	●	●	●	●	●	●	●	●	●	●
	LB 2112	ia	●	●	●	●	●	●	●	●	●	●
ELCON	1881/1882	ia	●	●	●	●	●	●	●	●	●	●
	471/472	ia	●	●	●	●	●	●	●	●	●	●
	2871/2872	ia	●	●	●	●	●	●	●	●	●	●
	2874/2875/2876	ia	●	●	●	●	●	●	●	●	●	●
GEORGIN	AVB 122	ia	●	-	●	-	●	●	-	●	●	●
	AVB 125	ia	●	-	●	-	●	●	-	●	●	●
	AVB 128	ia	●	-	●	-	●	●	-	●	●	●
Hima	F3328A	ib	●	-	●	-	●	●	-	●	●	●
	F3335	ib	●	-	-	-	●	●	-	●	●	●
	H4007	ib	●	-	●	-	●	●	-	●	●	●
MTL	728P, 7128P, 7728P	ia	-	-	-	-	●	-	-	●	●	●
	728, 7028, 7128, 7728	ia	●	●	●	●	●	●	●	●	●	●
	3021, 4021, 4021S	ia	●	-	●	-	●	●	-	●	●	●
	3022	ia	-	-	-	-	●	-	-	-	-	-
	4023	ia	-	-	-	-	●	-	-	-	-	-
	4024	ia	●	-	●	-	●	●		●	●	●
	4025	ia	●	●	●	●	●	●	●	●	●	●
	5021, 5023, 5024	ia	●	-	●	-	●	●	-	●	●	●
	5025	ia	●	-	●	-	●	●	●	●	●	●
	4521/4523/4524	ia	●	-	-	-	●	●	●	●	●	●
	5521/5523/5524	ia	●	-	-	-	●	●	●	●	●	●
Pepperl & Fuchs	Z 728	ia	●	●	●	●	●	●	●	●	●	●
	Z 779	ia	●	●	●	●	●	●	●	●	●	●
	EGA-041-3	ia	-	●	●	●	●	●	●	●	●	●
	KFD2-SD-EX1.36	ia	-	-	-	-	-	●	-	-	-	-
	KFD2-SL-EX1.36	ia	-	-	-	-	-	●	-	-	-	-
	KFD2-SD-EX1.48	ia	-	●	-	●	-	●	●	●	●	●
	KFD2-SL-EX1.48	ia	-	●	-	●	-	●	●	●	●	●
	KFD2-SL-EX1.48.90A	ia	-	-	-	-	-	-	-	●	●	●
	KFD2-SL-EX1.48.90A	ia	-	-	-	-	-	-	-	●	●	●
	KFD2-SL2-EX1.LK	ia	-	●	-	●	-	●	●	●	●	●
	KFD2-SL2-EX2	ia	-	●	-	●	-	●	●	●	●	●
	KSD2-B0-EX	ia	-	●	●	●	●	●	●	●	●	●
	RSD-B0-EX4	ib	-	●	-	●	-	●	●	●	●	●
	RSD-V0-EX8	ib	-	-	-	-	-	-	-	●	●	●

TABELLA PER BARRIERE IS

Produttore	Riferimento	Ex	Componenti elettrici standard IS							Componenti elettrici booster IS		
			EX IA IIC T6 488650.01/02 488660.01 488670.01 LCIE/AUS	Ex ia IIC T6 490885 490890 (490895) LCIE/FM/CSA	Ex ia IIC T6 483580.01/03 483960.01/03 LCIE/AUS	Ex ia 490880 (493997) LCIE/FM/CSA	Ex ia IIB T6 482160.01 LCIE	Ex ia IIC T6 482870.01 LCIE	Ex ia 492335 LCIE/FM/CSA	Ex ia IIC T6 492965.01/02 LCIE	Ex ia IIC T6 496565 LCIE	Ex ia IIC T6 495910 LCIE
SIEMENS	5RD00-0AB0	ib	-	-	-	-	-	-	-	●	-	-
	7RD00-0AB0	ia	-	-	-	-	-	-	-	●	●	●
	7RD01-0AB0	ia	-	-	-	-	-	-	-	●	●	●
	7RD10-0AB0	ia	-	-	-	-	-	-	-	●	●	●
	7RD11-0AB0	ia	-	-	-	-	-	-	-	●	●	●
	7RD20-0AB0	ia	-	-	-	-	-	-	-	●	●	●
	7RD21-0AB0	ia	-	-	-	-	-	-	-	●	●	●
STAHL	9001/01-252-100-14	ia	●	●	27 V	27 V	●	●	●	●	●	●
	9001/01-280-100-10	ia	●	●	24 V	24 V	●	●	●	●	●	●
	9001/01-280-110-10	ia	●	-	24 V	-	●	●	-	●	●	●
	9002/13-280-100-04	ia	24 V	24 V	27 V	27 V	24 V	24 V	24 V	17 V	17 V	17 V
	9311/52-11-10	ia	-	●	●	25 V	25 V	●	●	15 V	15 V	15 V
	9111/63-11-00	ia	-	●	●	25 V	25 V	●	●	15 V	15 V	15 V
	9351/10-15-10	ia	-	●	●	-	-	●	●	●	●	●
	9351/10-16-10	ia	-	●		●	-	●	●	●	●	●
	9351/10-17-10	ia	-	-	-	-	-	●	-	-	-	-
	9381/10-187-050-10	ib	-	●	●	●	●	●	●	●	●	●
	9381/10-246-055-10	ib	-	●	●	●	●	●	●	●	●	●
	9381/10-246-070-10	ib	-	●	●	●	●	●	●	●	●	●
	9465/12-04-11	ib	-	●	●	-	-	●	●	●	●	●
	9475/12-04-21	ia/ib	-	●	-	●	-	●	●	●	●	●
	9475/12-04-31	ia/ib	-	-	-	-	-	-	-	●	●	●
	9475/12-08-41	ia/ib	-	-	-	-	-	-	-	-	-	-
	9475/12-08-51	ib	-	-	-	-	-	-	-	-	●	●
	9475/12-08-61	ia/ib	-	-	-	-	-	-	-	-	●	●
Turck	MK72-S01-EX	ib	-	-	-	-	●	●	-	●	●	●
	MK72-S02-EEX	ib	-	-	-	-	●	●	-	●	●	●
	MK72-S04-EEX	ib	●	-	●	-	●	●	-	●	●	●
	MK72-S05-EEX	ib	●	-		-	●	●	-	●	●	●
	MK72-S06-EEX	ib	●	-	●	-	●	●	-	●	●	●
	MK72-S07-EEX	ib	●	-		-	●	●	-	●	●	●
	MK72-S09-EEX	ia		-		-			-	-	-	-
	MK72-S12-EEX	ia	●	-	●	-	●	●	-	●	●	●
	MC72 - 41	ia	●	-	●	-	●	●	-	●	●	●
	MC72 - 43	ia	●	-	●	-	●	●	-	●	●	●
	MC72 - 44	ia		-	-	-			-	●	●	●
BARTEC	07-7331-2301/1000	ia	●	-	-	-	●	●	-	●	-	-
	07-7331-2301/1100	ia	●		●		●	●		●	-	-

Per tutte le domande: tech.support@parker.com

SPECIFICHE TECNICHE
INFORMAZIONI SULLE VALVOLE A SOLENOIDE

SPECIFICHE TECNICHE DELLE VALVOLE A SOLENOIDE

Informazioni generali

Le valvole a solenoide sono dispositivi elettromagnetici utilizzati per interrompere o deviare il flusso di fluidi mediante l'apertura o la chiusura di uno o più orifizi.

La valvola a solenoide è composta da tre elementi principali:

1. Un elettromagnete composto da un solenoide (avvolgimento) e da un giogo magnetico.
2. Un pilota con nucleo mobile (che, in alcuni casi apre e chiude direttamente la valvola).
3. Il corpo della valvola con un orifizio aperto o chiuso dal nucleo o dal diaframma per lasciar passare o interrompere il flusso del fluido.

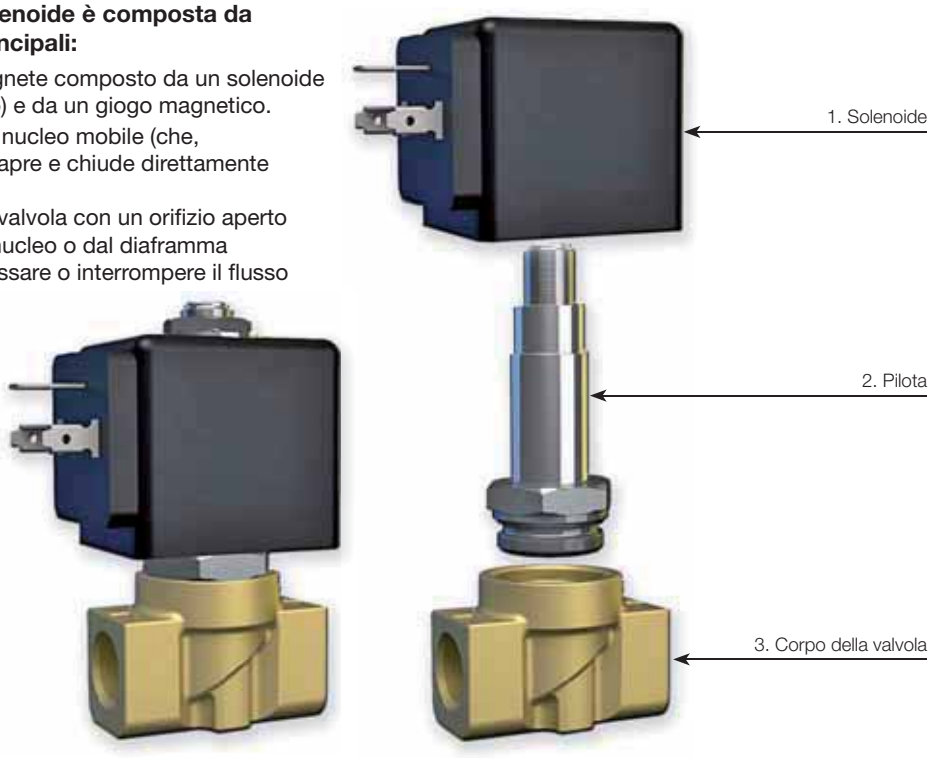

Principi di funzionamento

Il termine solenoide fa riferimento all'operatore e alla bobina, chiamata anche pilota o attuatore magnetico.

La bobina è formata da un avvolgimento di filo di rame su un rocchetto di supporto. Quando viene alimentata da corrente elettrica, si generano delle linee di flusso magnetico che assumono maggiore concentrazione al centro della bobina.

Questo flusso magnetico solleva il nucleo mobile collocato nella bobina fino a portarlo a contatto del nucleo fisso. Nel corpo della valvola è presente un orifizio attraverso il quale passa il fluido quando la valvola è aperta.

Il nucleo mobile presenta una superficie di tenuta che, quando la bobina è alimentata, si solleva dall'orifizio (azionamento diretto) o dalla membrana (azionamento pilotato) della valvola aprendo la valvola stessa.

Quando la bobina viene de-energizzata, la spinta di una molla di rinvio riposiziona il nucleo mobile nella posizione originaria di chiusura sull'orifizio della valvola, interrompendo il passaggio del fluido.

COMPONENTI DI BASE DI UNA VALVOLA A SOLENOIDE

Corpo della valvola: parte principale della valvola a solenoide che comprende attacchi, tenuta e orifizi.

Gruppo tubo del solenoide: cilindro di acciaio inossidabile sigillato ermeticamente e chiuso ad una estremità. È la guida del nucleo mobile che viene mosso magneticamente. La bobina solenoide è montata sul lato esterno del tubo che racchiude la valvola.

Nucleo mobile: realizzato in acciaio inossidabile ferritico, viene attirato dal campo magnetico del solenoide e scorre all'interno del tubo.

Molla del nucleo mobile (o molla di ritorno): usata per tenere fermo il nucleo mobile e per riportarlo in posizione quando viene de-energizzato.

Tenuta: parte del nucleo mobile, viene usata per chiudere l'orifizio principale delle valvole o l'orifizio pilota.

Elettromagnete (o bobina solenoide): componente elettrico formato da avvolgimenti in filo di rame (solenoide) e da un giogo (armatura) magnetico; quando la corrente elettrica lo attraversa, genera un campo magnetico attirando il nucleo mobile.

Housing: componente che contiene e protegge la bobina.

Giogo: contenitore metallico che circonda la bobina e concentra la forza elettromagnetica sul nucleo mobile.

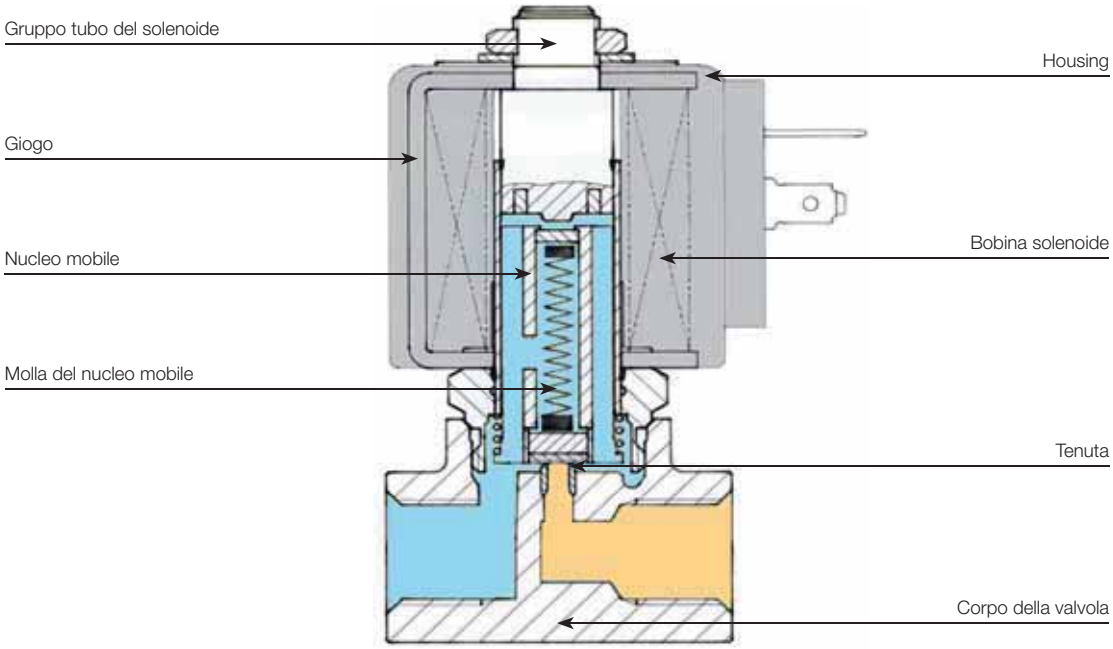

TERMINOLOGIA TECNICA UTILIZZATA NELLE TABELLE

Azionamento	Corpo	Funzione	Raccordi	Orifizio (mm)	Fattore Portata	Pressione Differenziale Mass. (Bar)	Temp. Mass. Fluido	Pagina Elettrovalvola Parker	Pagina Elettrovalvola Parker LUCIFER®

NORMALMENTE CHIUSA

Raccordi	Orifizio Ø	Fattore Portata			Pressione differenziale			Temp. Fluido		Tenuta	Valvola PARKER LUCIFER®			Potenza		Gruppo Elettrico	Disegno nr.
					Min	Mass		Min	Mass		Valvola	Housing	Bobina				
BSP	mm	Kv l/min	KV m³/h	Qn l/min	bar	AC bar	DC bar	°C	°C					AC W	DC W		

Le caratteristiche tecniche principali di ciascuna valvola a solenoide sono indicate nelle tabelle. La terminologia utilizzata è indicata e spiegata di seguito. Tenere presente che in alcune sezioni è possibile scegliere tra due gamme di prodotti: le valvole Parker, nelle tabelle blu, e le valvole Parker Lucifer, nelle tabelle arancioni.

Azionamento: Il metodo meccanico usato per controllare il flusso.

Corpo: Parte principale della valvola a solenoide con gli attacchi, le tenute e gli orifizi necessari.

Funzione: Modo di funzionamento della valvola quando è de-energizzata.

Raccordi: Le dimensioni dei raccordi sono indicate in pollici (G), in BSP o sottobase, quando viene utilizzata un'interfaccia piana per gli attacchi.

Orifizio (mm): Diametro dell'orifizio principale in millimetri (diametro nominale).

Fattore portata: Indicano la quantità di acqua che scorre nella valvola a solenoide con una caduta di pressione di 1 bar in un minuto. La quantità è espressa in l/min e m³/h.

Temperatura massima fluido: Temperatura massima del fluido che la valvola può sopportare.

Temperatura massima ambiente: Temperatura massima dell'ambiente cha la valvola può sopportare.

Pressione differenziale: La pressione minima del differenziale richiesta per il funzionamento (indicata in bar).

Pressione differenziale massima (MOPD): La pressione massima del differenziale con il 90% della tensione nominale (-10% Vn) applicata alla bobina del solenoide (CA) e con il 95% della tensione nominale (-5% Vn) (CC).

NORMALMENTE CHIUSA

Raccordi	Orifizio Ø	Fattore portata			Pressione differenziale			Temp. Fluido		Tenuta	Valvola PARKER			Potenza		Gruppo Electtrico	Disegno nr.
					Min	Mass		Min	Mass		Codice di Ordinazione	Modello valvola	Modello bobina				
BSP	mm	Kv l/min	KV m^3/h	Qn m^3/h	bar	AC bar	DC bar	°C	°C					AC W	DC W		

Temperatura fluido: Temperature minime e massime consentite per l'utilizzo del mezzo (°C).

Tenuta: Materiali usati per i dischi di tenuta.

Valvola: Utilizzabile per le valvole Parker mostrate nelle tabelle blu.

Il numero di ordine delle valvole indica esclusivamente le valvole. (per ulteriori informazioni, consultare la sezione "Come effettuare un ordine").

Codice Valvola: Utilizzabile per le valvole Parker Lucifer mostrate nelle tabelle arancioni. Il codice della valvola indica solo la valvola. (per ulteriori informazioni, consultare la sezione "Come effettuare un ordine").

Rif. Valvola: Indica il tipo di valvola Parker

Housing: Solo per le valvole Parker Lucifer indicate nelle tabelle di colore arancione, è possibile scegliere l'housing per la protezione della bobina.

Bobine: Riferimento delle bobine compatibili.

Modello bobina: Bobine compatibili consigliate.

Potenza: Assorbimento di un componente elettrico specifico per il serbatoio a pressione selezionato; è indicato in CA e CC (W). L'assorbimento energetico deve essere considerato in condizioni di bobina fredda, a una temperatura ambiente di +20°C.
Per le serie 483510. 481865 e 496081. l'assorbimento elettrico indicato nelle tabelle deve essere considerato in condizioni di calore.

Gruppo Elettrico: Consultare la sezione specifica per i gruppi di compatibilità delle bobine.

Disegno nr.: Numero del disegno.

SPECIFICHE TECNICHE

Le valvole a solenoide sono prodotti di alta ingegneria che possono essere usati in ambiti molto diversi.

In aggiunta alla funzionalità, quando si seleziona il prodotto migliore per le proprie esigenze sono importanti la compatibilità e l'adattabilità all'ambiente operativo.

In questa sezione viene fornita una breve presentazione di componenti, modalità di azionamento e funzionamento delle valvole a solenoide di Parker Hannifin FCDE.

Tecnologie diverse:

Le valvole a solenoide sono dispositivi azionati elettricamente e vengono utilizzate per il controllo del flusso.
I tipi più comuni di valvole a solenoide sono:

Valvole ad azionamento diretto

Valvole Azionamento misto

Valvole ad azionamento pilotato (indiretto)

VALVOLA AD AZIONAMENTO DIRETTO

La forza magnetica viene usata direttamente per aprire o chiudere il nucleo mobile che controlla il passaggio del fluido. Le prestazioni sono limitate da bobina, pressione e dimensioni dell'orifizio. Nel caso delle valvole ad azionamento diretto, la pressione minima richiesta è di 0 bar, mentre la pressione massima varia in base alla combinazione scelta (valvola/bobina).

Valvola ad azionamento diretto

De-energizzata

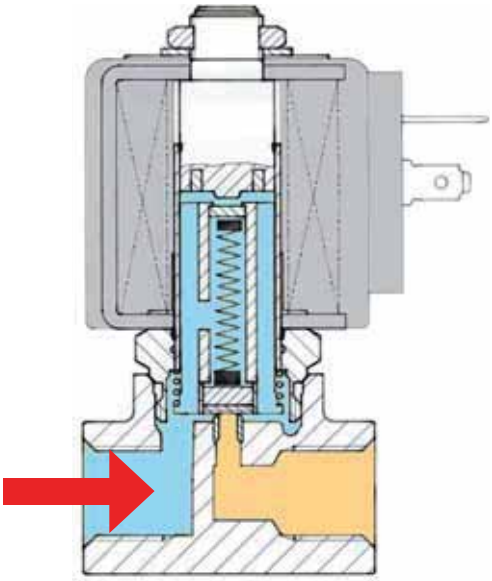

Energizzata

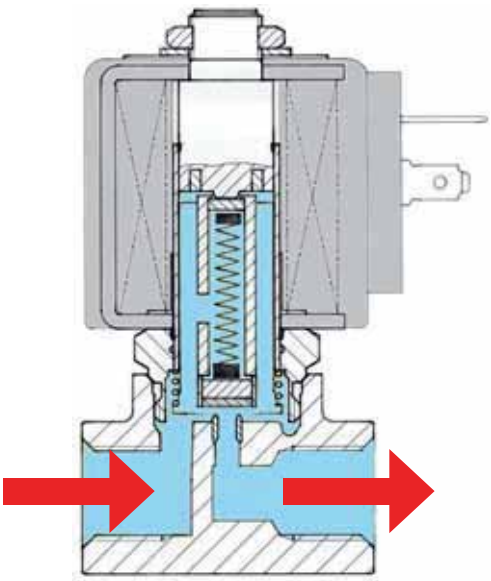

Esempio:

- Serie 121
- Serie 146
- Serie N74

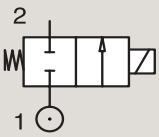

VALVOLA AD AZIONAMENTO PILOTATO

Per controllare un flusso di maggiore portata, è necessario usare valvole ad azionamento pilotato.
La pressione entra nel gruppo magnetico ad azionamento diretto che indirizza il flusso a una "camera pilota" che distribuisce la pressione pilotata su una grande superficie (in genere un membrana o pistone).
Di conseguenza, viene generata una grande forza che sposta gli elementi principali di tenuta con una pressione maggiore su un grande orifizio. Per l'utilizzo è necessaria una pressione minima in grado di azionare la valvola (indicata nel catalogo). In molte applicazioni, questa valvola non presenta problemi di rilievo (consultare la sezione delle valvole azione mista). La pressione della valvola nella fase iniziale si attesta tra 0.1 e 0.5 bar (a seconda della valvola). (NB. Le valvole ad azionamento pilotato vengono chiamate anche valvole con servocomando).

Valvola ad azionamento pilotato (indirette)

De-energizzata

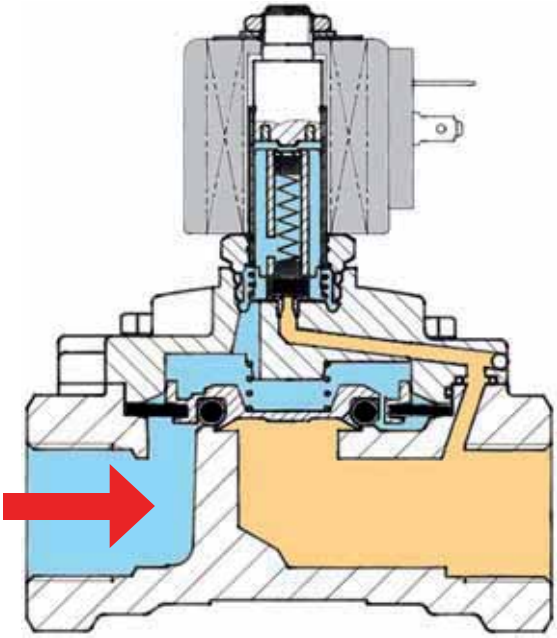

Energizzata

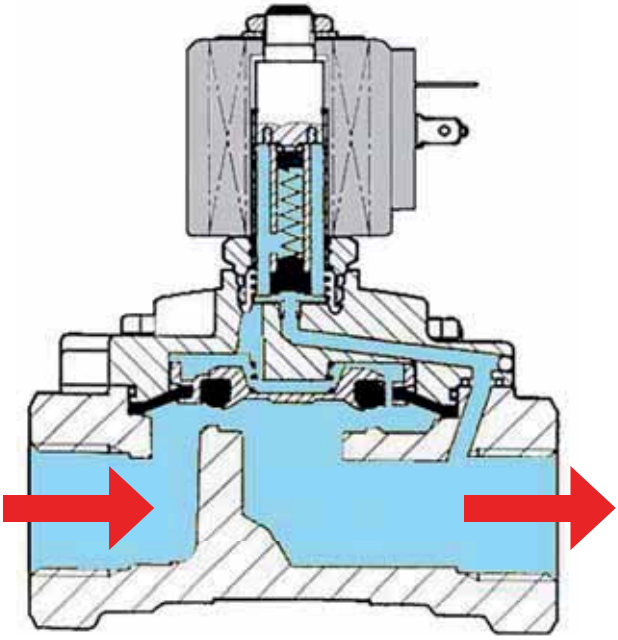

Esempio:

- Serie 321
- Serie 7321B
- Serie 168.1

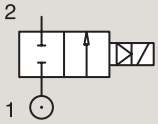

VALVOLA AZIONE MISTA

Le valvole ad azione mista uniscono le caratteristiche delle valvole ad azionamento diretto e di quelle ad azionamento pilotato. Un collegamento meccanico tra il nucleo mobile e il blocco della membrana consente alla valvola di funzionare come una valvola ad azionamento diretto in condizioni di bassa pressione e come una valvola ad azionamento pilotato in caso di pressioni elevate. Le valvole ad azione mista sono progettate in modo specifico per applicazioni che richiedono una pressione differenziale pari a 0 e un flusso maggiore rispetto a quello consentito da una valvola ad azionamento diretto.

Valvola ad azionamento Magnalift

De-energizzata

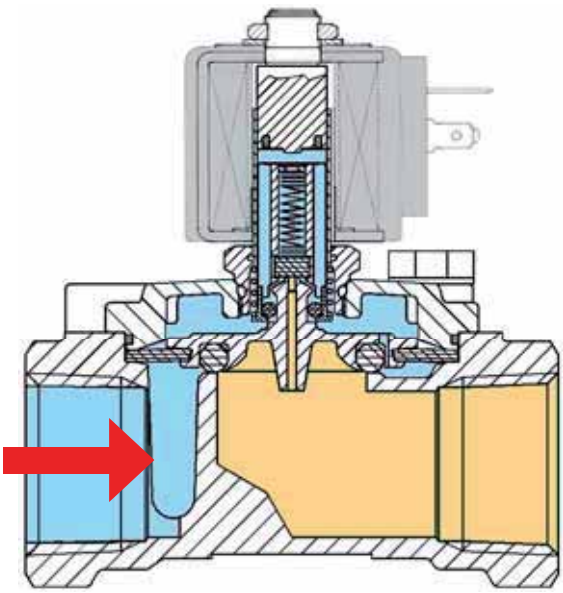

Energizzata

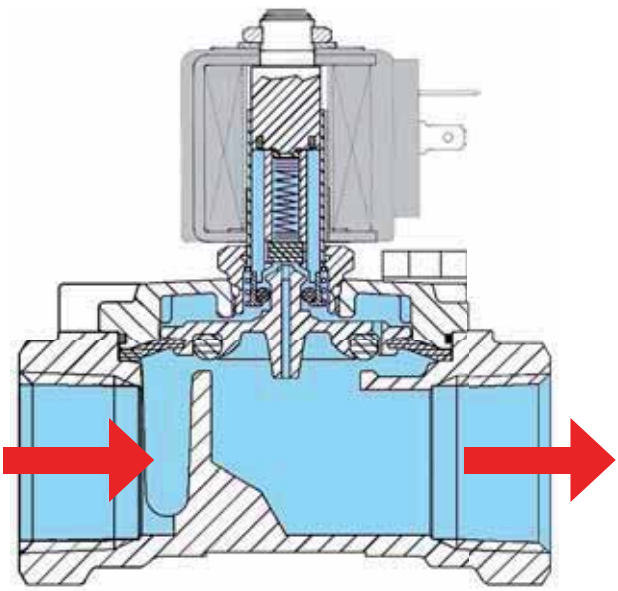

Esempio:

- Serie 221
- Serie 123

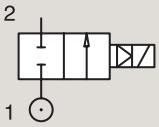

VALVOLA NORMALMENTE CHIUSA

La maggior parte delle nostre valvole sono disponibili come normalmente chiuse o normalmente aperte. Per certe applicazioni, può essere opportuno scegliere una valvola normalmente aperta. La differenza di progettazione di questa tecnologia, sta nel design della tenuta, che risulta invertita se paragonata a una valvola normalmente chiusa.

Valvole normalmente chiuse

De-energizzata

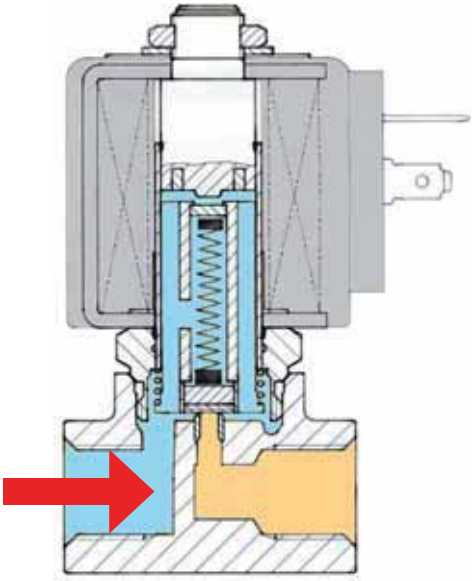

Energizzata

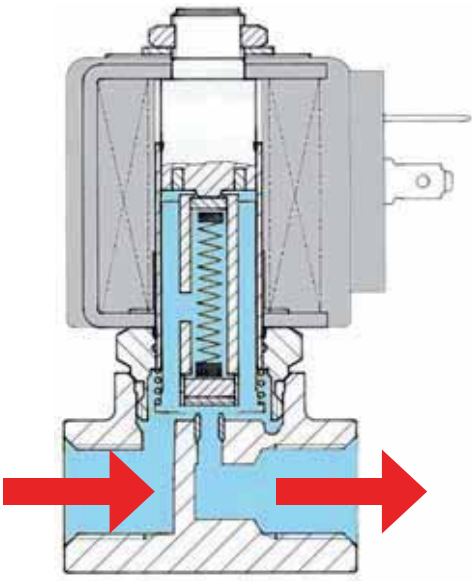

Esempio:

- Serie 121
- Serie 146
- Serie N74

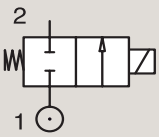

VALVOLA NORMALMENTE APERTA

Valvole normalmente aperte

De-energizzata

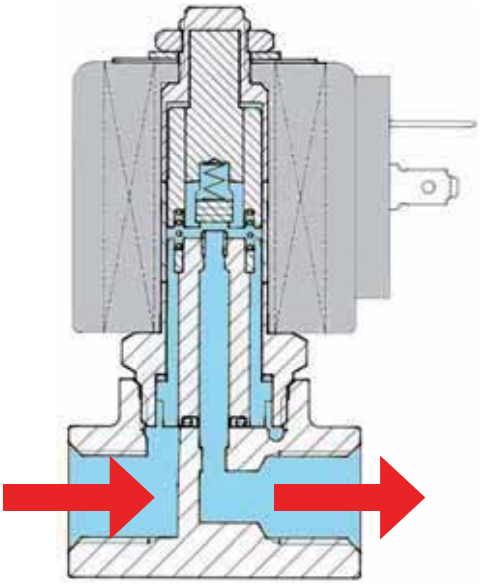

Energizzata

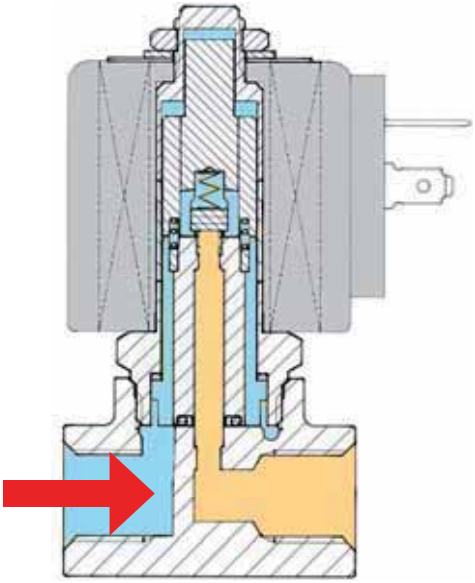

Esempio:

- Serie 122
- Serie 136
- Serie 7322B

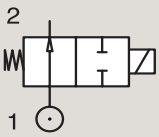

INTERVALLI DI FLUSSO E PRESSIONE

Campo di applicazione:

Ogni tipologia di valvola, come descritto nelle pagine precedenti, ha un campo di applicazione specifico in base alle caratteristiche di pressione e flusso. Il seguente grafico mostra quali tipi di valvole sono adatti a determinate condizioni.

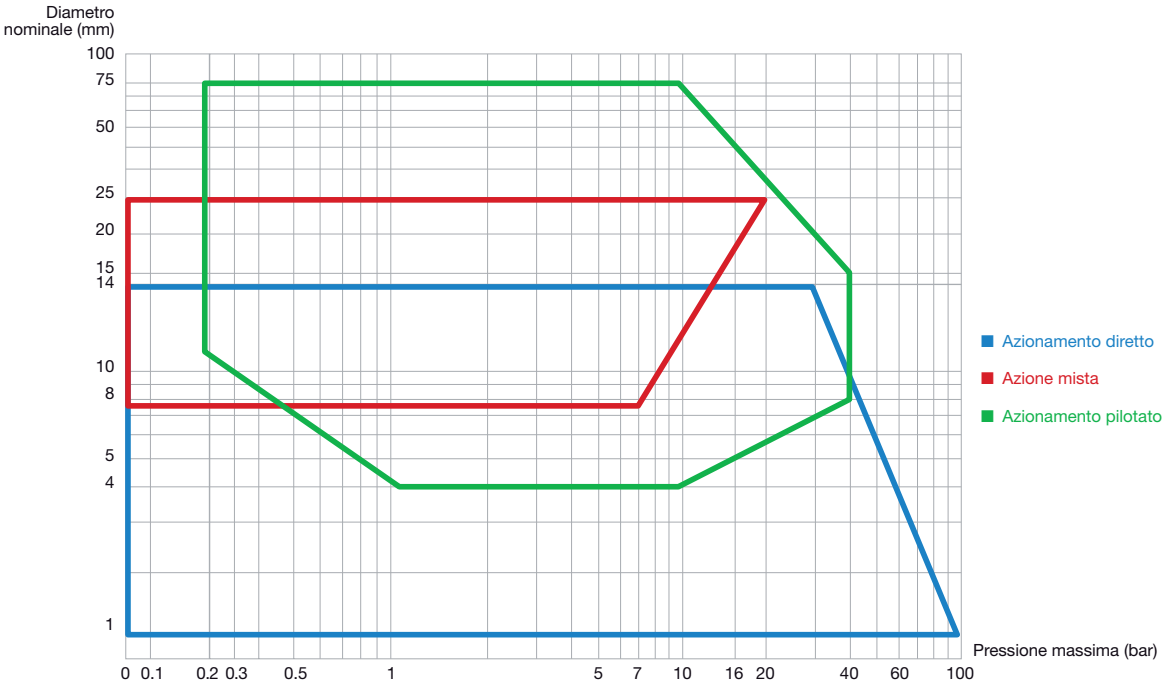

Campi di applicazione delle valvole a solenoide Parker.

SCELTA DELLE VALVOLE A SOLENOIDE

La scelta delle valvole a solenoide corrette è molto importante, in quanto determina le impostazioni e le prestazioni necessarie per l'applicazione pratica su un sistema. Per individuare il tipo esatto di valvola a solenoide, bisogna tenere presenti diversi parametri.

Tuttavia, il metodo di calcolo, basato sul coefficiente di portata Kv, si è dimostrato estremamente pratico perché può essere stabilito sulla base di:

- Portata richiesta
- Resistenza di flusso
- Tipo di fluido e relativa viscosità
- Densità specifica e temperatura

Il coefficiente di portata Kv si stabilisce come indicato dagli standard VDI/VDE 2173.
Rappresenta la portata di acqua in m3/h o L/min con una temperatura variabile da 5 a 30°C che passa attraverso la valvola a solenoide con una caduta di pressione di 1 bar.

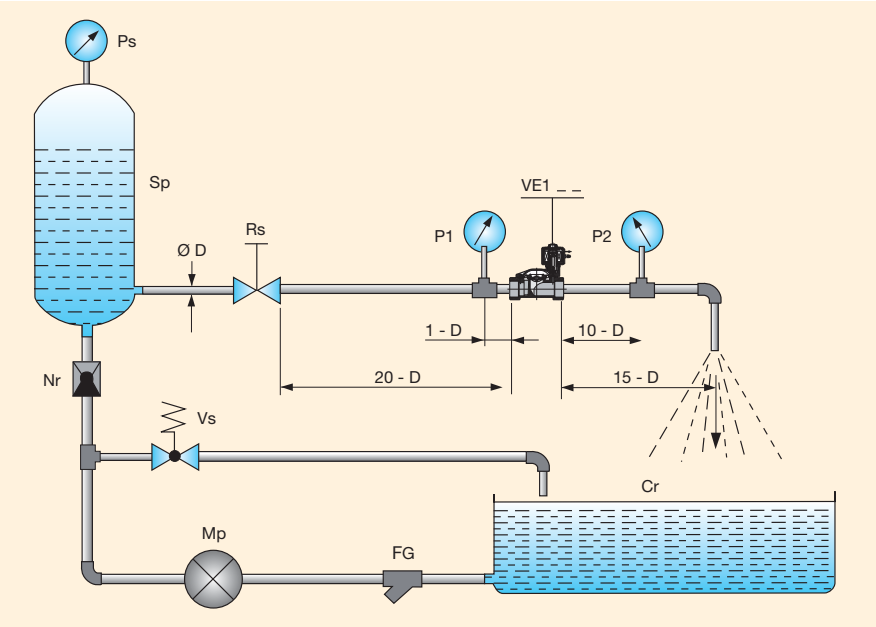

FG = Filtro a griglia **Mp** = Pompa **Vs** = Valvola di sicurezza **Nr** = Valvola di controllo
Sp = Serbatoio pressione **Ps** = Manometro pressione statica

Nota:

Il coefficiente di portata utilizzato negli USA è conosciuto come Cv e rappresenta la portata d'acqua in galloni statunitensi per minuto con caduta di pressione ΔP di 1 psi.

Per convertire **C_V** in **Kv** e viceversa, usare la formula:

$1\ K_V = 0.862\ C_V$
$1\ C_V = 1.16\ K_V$

Una volta convertite le condizioni attuali in questo fattore Kv, il tipo di valvola può essere individuato consultando le pagine nelle relative sezioni del catalogo.

I parametri usati per selezionare la valvola a solenoide si trovano nella pagina successiva.

Consultare le tabelle di conversione delle diverse unità di misura in base ai parametri ISO (International Standards Organisation) - I.S. (International System) mostrati in questo catalogo.

INTERVALLI DI FLUSSO E PRESSIONE

Pressione
simbolo **(P)**
unità di misura **[bar]**
Pressione di lavoro

Caduta di pressione
simbolo **(ΔP)**
unità di misura **[bar]**
Differenza di pressione tra ingresso (P_1) e uscita (P_2) della valvola a solenoide quando un mezzo passa attraverso la valvola ($\Delta P = P_1 - P_2$).

Coefficiente di flusso
simbolo **(Kv)**
unità di misura **[l/min]**

Densità specifica del mezzo
simbolo **(γ)**
unità di misura **[Kg/dm³]**

Temperatura del fluido
simbolo **(t)**
unità di misura **[°C]**

Portata
- per liquidi
  simbolo **(Q)**
  unità di misura **[l/min]**
- per gas
  simbolo **(Qn)**
  unità di misura **[Nm³/h]**
- per vapore
  simbolo **(Qv)**
  unità di misura **[Kg/h]**

Volume specifico
simbolo **(Vs)**
unità di misura **[m³/Kg]**

a) Valvole a solenoide per liquidi:

Portata: $Q = Kv \cdot \sqrt{\frac{\Delta P}{\gamma}}$ dove: $Q = l/min$, $\Delta P = bar$, $\gamma = Kg/dm^3$

Coefficiente di portata:

$$Kv = Q \cdot \sqrt{\frac{\gamma}{\Delta P}}$$

In caso di liquidi con viscosità maggiore di 3°E (22 cStokes) il Kv si modifica in base alla formula:

$$Kv_1 = Kv + C \qquad C = \frac{\delta \cdot \sqrt{Kv}}{200 \cdot Q} + 1$$

dove C rappresenta il fattore di correzione della viscosità calcolato sulla base della seguente formula:
dove:
δ = viscosità cinematica del fluido espressa in centistokes
Kv= fattore di velocità di portata della valvola a solenoide
Q = portata in l/min.

Caduta di pressione:

$$\Delta P = \gamma \cdot \left(\frac{Q}{Kv}\right)^2$$

b) Valvole a solenoide per gas:

Se $\Delta P \leq 1/2\ P_1$ utilizzare le seguenti formule:

Portata: $$Qn = 514 \cdot Kv \cdot \sqrt{\frac{\Delta P \cdot P_2}{\gamma n \cdot (273 + t)}}$$

dove: Qt. = Nm^3/h P_1 = bar P_2 = bar

Coefficiente di portata: $$Kv = \frac{Qn}{514} \cdot \sqrt{\frac{(273+t) \cdot \gamma n}{\Delta P \cdot P_2}}$$

t = °C
γ n = Kg/m^3

Caduta di pressione: $$\Delta P = \frac{(273 + t) \cdot \gamma n}{P_2} \cdot \frac{Qt.^2}{(514 \cdot Kv)^2}$$

Se $\Delta P > 1/2\ P_1$ utilizzare le seguenti formule:

$$Qt. = 757 \cdot Kv \cdot \sqrt{\frac{\Delta P \cdot P_2}{(273 + t) \cdot \gamma n}}$$

c) Valvole a solenoide per vapore:

Se $\Delta P \leq 1/2\ P_1$ utilizzare le seguenti formule:

Portata: $$Qv = 31.7 \cdot Kv \cdot \sqrt{\frac{\Delta P}{Vs}}$$

dove: Qv = Kg/h ΔP = bar Vs = m^3/Kg

Coefficiente di portata: $$Kv = \frac{Qv}{31.7} \cdot \sqrt{\frac{Vs}{\Delta P}}$$

Caduta di pressione: $$\Delta P = Vs \cdot \frac{Qv^2}{(31.7 \times Kv)^2}$$

Se $\Delta P > 1/2\ P_1$ utilizzare le seguenti formule:

$$Qv = 22.4 \cdot Kv \sqrt{\frac{P_1}{Vs}}$$

Note:

1) Se il valore ΔP non è specificato, usare il seguente riferimento basato su applicazioni pratiche:

- Solo per liquidi in caso di scarico libero ΔP = 90% della pressione in ingresso (P_1).
- Per i gas, non usare mai un valore ΔP superiore al 50% della pressione assoluta in ingresso, perché una caduta di pressione eccessiva potrebbe causare una portata non regolare. In molti casi, ΔP può essere considerato il 10% della pressione in ingresso.

2) Valore del volume specifico (Vs) per vapore saturo a secco, consultare la tabella nel diagramma 3.

PORTATA DEI LIQUIDI

La portata di liquido in un tubo o in una valvola è dato da:

$$Q = Kv \cdot \sqrt{\frac{\Delta P}{\gamma}}$$

Dove
- **Q** = Portata **[l/min]**
- **ΔP** = Pressione differenziale **[bar]**
- **γ** = Densità del fluido **[kg/dm³]** (acqua **γ = 1 [kg/d m³]**)
- **kv** = Fattore di flusso **[l/min]**

Fattore di portata kv:

Il fattore di portata kv di una valvola viene definito come la portata di acqua in litri per minuto, con caduta di pressione di 1 bar nella valvola.

I produttori di valvole utilizzano definizioni diverse per kv. Può essere espresso in l/h o m³/h.

È pertanto importante fare attenzione quando si confrontano i valori.

Qt. massima di portata

Nel caso di particolari valvole a due vie, la portata massima deve essere limitato per motivi di resistenza meccanica e durata.

Una portata molto alta può spostare dalla sede una guarnizione o una membrana.

Le portate massime sono indicate nel catalogo.

Fattore Portata

Kv l/min	KV m³/h	Qn l/min

NORMALMENTE CHIUSA

Raccordi	Orifizio Ø	Fattore Portata			Pressione differenziale			Temp. Fluido		Tenuta	Valvola PARKER LUCIFER®			Potenza		Gruppo Elettrico	Disegno nr.
					Min	Mass		Min	Mass		Valvola	Housing	Bobina				
BSP	mm	Kv l/min	KV m³/h	Qn l/min	bar	AC bar	DC bar	°C	°C					AC W	DC W		

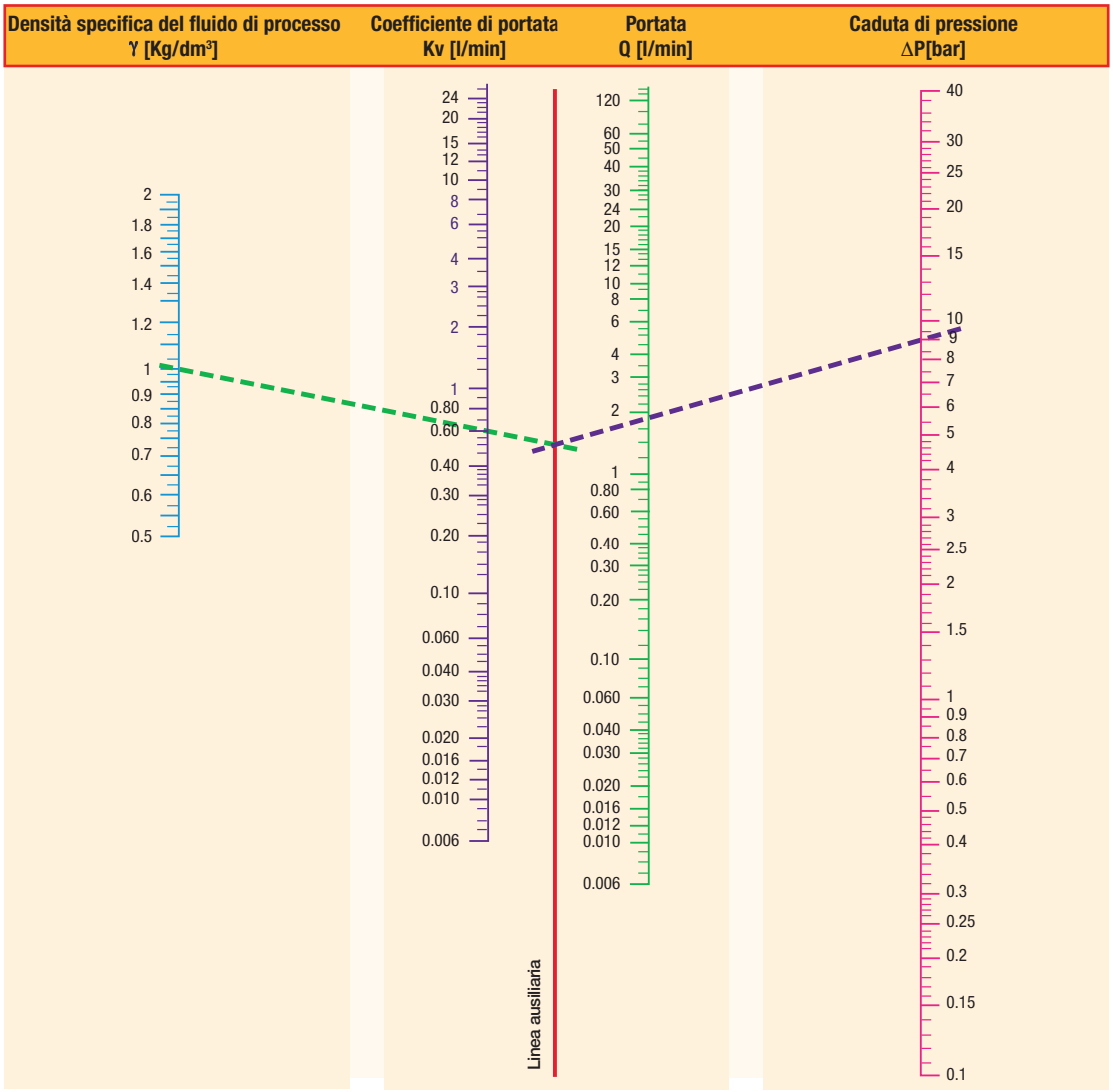

Monogramma per il calcolo della portata di liquido

Densità specifica dei fluidi più comuni (ϒ = Kg/dm³) - (t = 15°C - P = 760 mm Hg)					
Acetone	0.76	**Fenolo**	0.90	**Nafta**	0.76
Acqua	1.00	**Birra**	1.02	**Pentano**	0.63
Acqua marina	1.02	**Esano**	0.66	**Olio vegetale**	0.92
Alcol etilico	0.79	**Etano**	0.68	**Olio idraulico**	0.92
Metanolo	0.81	**Olio diesel**	0.70	**Vino**	0.95
Benzina	0.68	**Latte**	1.03		

PORTATA PER GAS

La portata di gas attraverso una valvola è dato da:

$$Q = C \cdot P_1 \cdot k_T \cdot \omega \cdot \gamma_{air} / \gamma_{gas}$$

Dove
- **Q** = Portata **[dm³/s]**
- **C** = Conduttanza **[dm³/s.bar]**
- **P_1** = Pressione in ingresso **[bar abs]**
- **γ** = Peso specifico **[kg/m³]**
- **k_T** = Fattore di correzione della temperatura

$$\omega = \sqrt{1 - \frac{P_2/P_1 - b}{1 - b}} \qquad k_T = \sqrt{\frac{293}{273 + \text{Temp. °C}}}$$

Qn. portata nominale:

I calcoli possono essere effettuati prendendo fattori di portata specifici sulla base dello standard CETOP RP 50P.

Il catalogo indica la portata nominale per scopi pratici e per agevolare la selezione delle valvole.

La portata nominale è definita come portata (L/min) di aria nella valvola con pressione in ingresso P_1 = 6 bar e caduta di pressione ΔP = 1 bar.

N.B.
I valori dei fattori di portata menzionati nei cataloghi sono soggetti a una variabilità del +/-15%.

Applicazione pneumatica: $\gamma_{aria} / \gamma_{gas} = 1$

a) Condizioni di portata strozzata $P_2 \leq b.P_1$
in questo caso $\omega = 1$ --> $Q = C . P_1 . kT$

b) Condizioni di portata libera $P_2 > b.P_1$
in questo caso --> $Q = C . P_1 . kT . \omega$

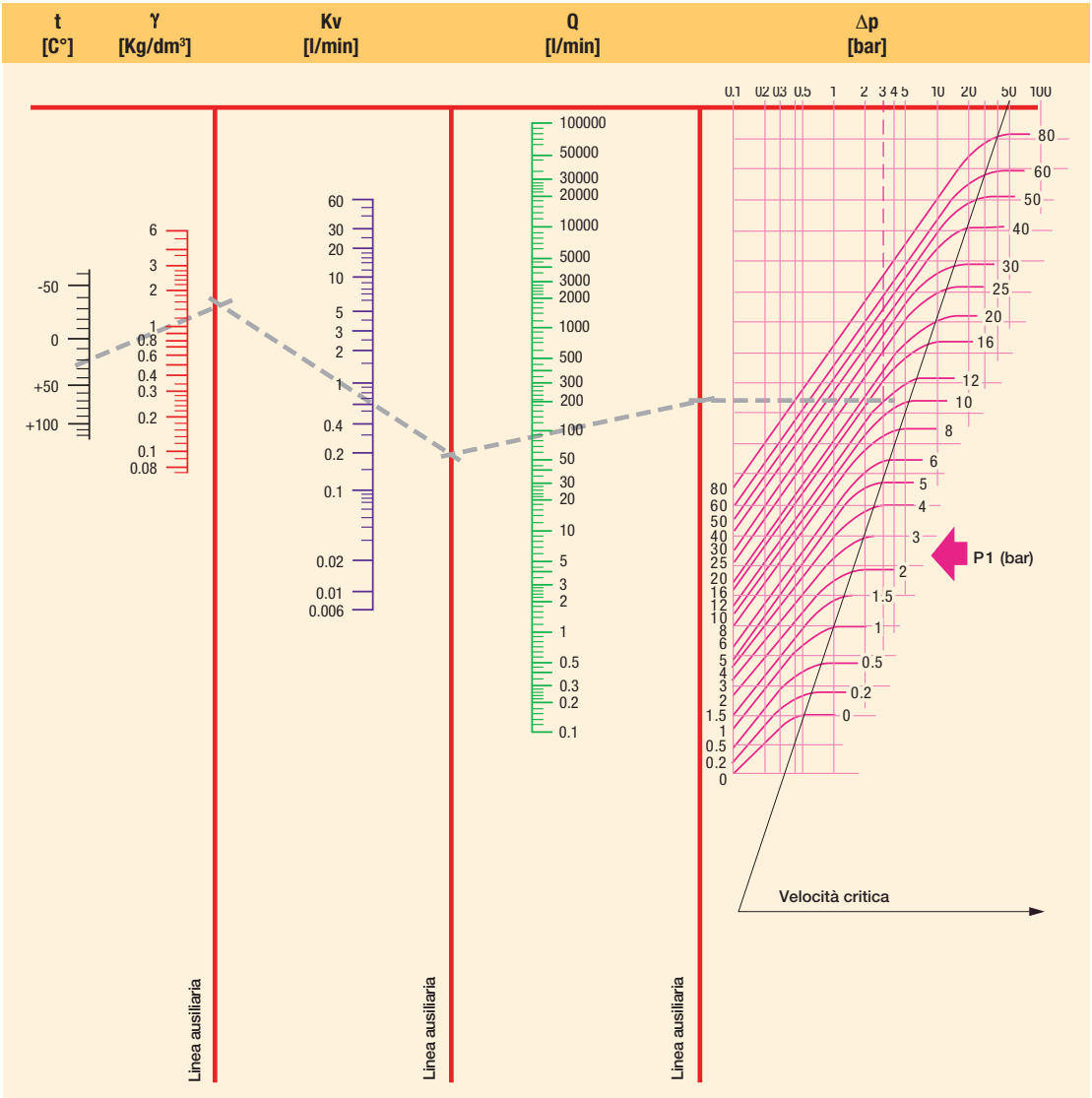

t = Temperatura fluido **ϒN** = Densità specifica **Kv** = Coefficiente di portata **Qn** = Portata **Δp** = Caduta di pressione
P_1 = Pressione in entrata

Densità specifica dei gas più comuni (ϒ = Kg/m³) - (t = 0°C - P = 760 mm Hg)					
Acetilene	1.176	**Elio**	0.179	**Gas naturale**	0.723
Anidride carbonica	1.965	**Etano**	1.035	**Metano**	0.722
Aria	1.293	**Etilene**	1.259	**Monossido di carbonio**	1.250
Argon	1.780	**Idrogeno**	0.089	**Ossigeno**	1.429
Nitrogeno	1.255			**Propano**	1.520
Butano	2.000			**Vapore**	0.805

SPECIFICHE TECNICHE

Diagramma 3 per il vapore saturo a secco

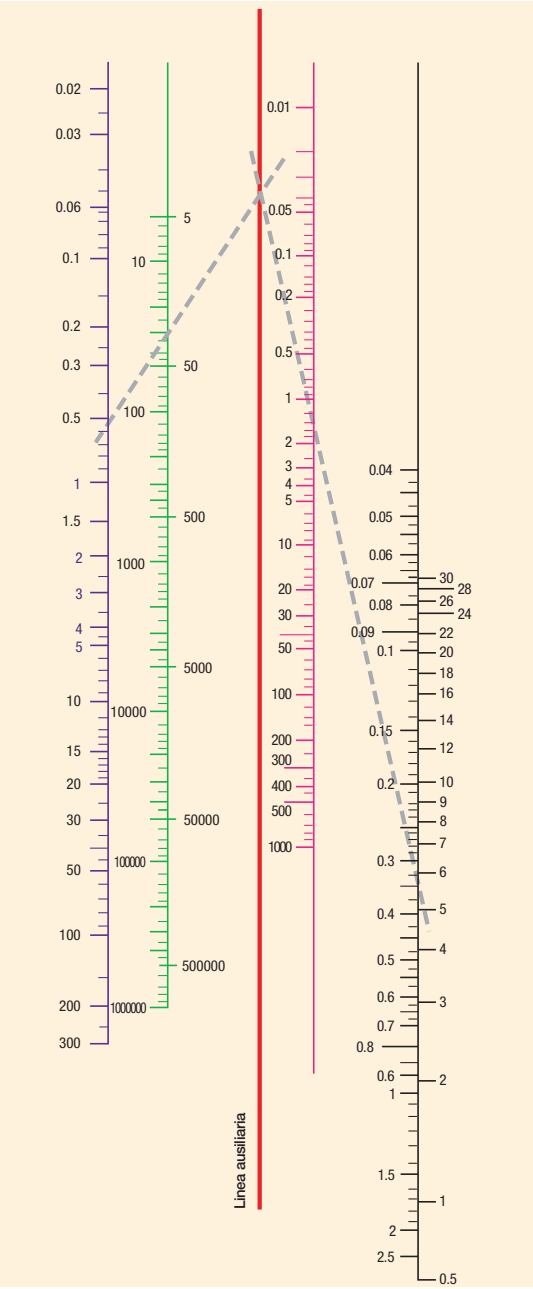

Dati vapore (saturo a secco)

P_2 bar	Temp. °C	Vs m³/Kg	P_2 bar	Temp. °C	Vs m³/Kg
0.01	6.6	131.600	10.00	179.0	0.200
0.02	17.1	68.300	110.00	183.2	0.181
0.03	23.7	46.500	120.00	187.1	0.176
0.04	28.6	35.500	13.00	190.7	0.155
0.05	32.5	28.700	14.00	194.1	0.144
0.06	35.8	24.200	15.00	197.4	0.135
0.08	41.1	18.500	16.00	200.4	0.126
0.10	45.4	15.000	17.00	203.4	0.119
0.20	5 9.7	7.800	18.00	206.2	0.113
0.30	68.7	5.330	19.00	208.8	0.107
0.40	75.4	4.070	20.00	211.4	0.102
0.50	80.9	3.300	22.00	216.2	0.093
0.60	85.5	2.790	24.00	220.8	0.085
0.70	89.5	2.410	26.00	225.0	0.079
0.80	93.0	2.130	28.00	229.0	0.073
0.90	96.2	1.910	30.00	232.8	0.068
1.00	99.1	1.730	32.00	236.4	0.064
1.50	110.8	1.180	34.00	239.8	0.060
2.00	119.6	0.900	36.00	243.1	0.057
2.50	126.8	0.730	38.00	246.2	0.053
3.00	132.9	0.620	40.00	249.2	0.051
3.50	138.2	0.530	45.00	256.2	0.045
4.00	142.9	0.470	50.00	262.7	0.040
4.50	147.2	0.420	55.00	268.7	0.036
5.00	151.1	0.380	60.00	274.3	0.033
5.50	154.7	0.350	65.00	279.6	0.030
6.00	158.1	0.320	70.00	284.5	0.028
6.50	161.2	0.300	80.00	293.6	0.024
7.00	164.2	0.280	90.00	301.9	0.021
7.50	167.0	0.260	100.00	309.5	0.018
8.00	169.6	0.250	150.00	340.5	0.011
8.50	172.1	0.230	200.00	364.2	0.006
9.00	174.5	0.220	225.00	374.0	0.003
9.50	176.8	0.210			

Kv = Coefficiente di portata **Qv** = Portata **Δp** = Caduta di pressione **Vs** = Volume specifico **P_2** = Pressione di uscita

TABELLA DI CONVERSIONE DELLA VISCOSITÀ

Centistokes cStokes mm²/S	°Engler °E	Saybolt Universal Second SSU	Rewood Second N°1 SRW N°1
1	1	-	-
12	2	65	55
22	3	100	90
30	4	140	120
28	5	175	155
45	6	210	185
60	8	275	245
75	10	345	305
90	12	415	370
115	15	525	465
150	20	685	610
200	26	910	810
300	39	1.385	1.215
400	53	1.820	1.620
500	66	2.275	2.025
750	97	3.365	2.995
1.500	197	6.820	6.075

ALTRE FORMULE UTILI

Formule:

°C	=	(°F - 32) x 5/9
°F	=	(°C x 9/5) + 32
m³/h	=	l/min x 0.06
l/min	=	m³/h x 16.67
m³/sec	=	m³/h x 2.778 x 10^{-4}
m³/sec	=	l/min x 1.667 x 10^{-5}

Esempi:

(**167°F**-32) x 5/9	=	**75°C**
(**30°C** x 9/5) + 32	=	**86°F**
100 l/min x 0.06	=	**6 m³/h**
9 m³/h x 16.67	=	**150 l/min**
18.000 m³/h x 2.778 x 10 -4	=	**5 m³/sec**
479.904 l/min x 1.667 x 10-5	=	**8 m³/sec**

TABELLA DELLE SOTTOBASI PER VALVOLE (Esempi)

Nella tabella sono visibili esempi di sottobasi e possibili associazioni con le valvole.
Per ulteriori informazioni, consultare i disegni delle sottobasi nelle pagine seguenti.

Codice sotto-base	488860.01 /.02/.03 /.04/.05	486162 /63/64	485635 /36/37	481168 /.04/.06 /.08/.10	481964.04 /.06/.08/.10	485291	485290	XGSPG1 /XGSPG2
Disegno	1	2	3	4	5	6	7	8
Codice valvola								
131F4480	●							
131F4480		●						
131F46		●						
131F4650		●						
131M74	●							
131M74	●							
131M7450	●							
131M7450	●							
131M75	●							
131M7550	●							
132F43		●						
132F44		●						
132F46		●						
133F46		●						
133F4650		●						
2019F1								●
3019F1								●
301XGR								●
341F34			●					
341F3403			●					
341L11					●			
341L2190							●	
341L9101				●				
345F34			●					
347L11					●			
E131F26								
E131F43		●						
E131F4350		●						
E131F44		●						
E131F4450		●						
E133F43		●						
E133F4350		●						
E133F44		●						
E133F4450		●						
E331L21						●		

TABELLA DELLE SOTTOBASI PER VALVOLE (Esempi)

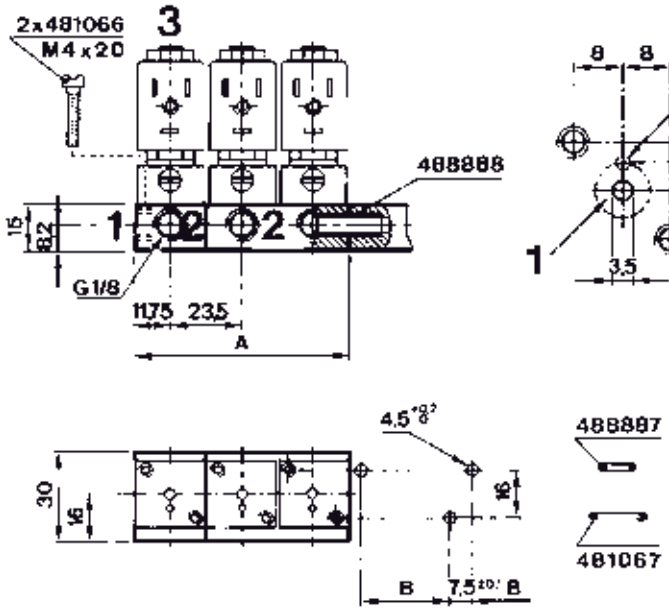

Disegno 1

Quantità di valvole per assemblaggio	Codice	A mm	B mm	Peso g
1	**488860-01**	23.5	16.0 ± 0.1	25
2	**488860-02**	47.0	39.5 ± 0.1	45
3	**488860-03**	70.5	63.0 ± 0.1	70
4	**488860-04**	94.0	86.5 ± 0.1	120
5	**488860-05**	117.5	110.0 ± 0.1	120

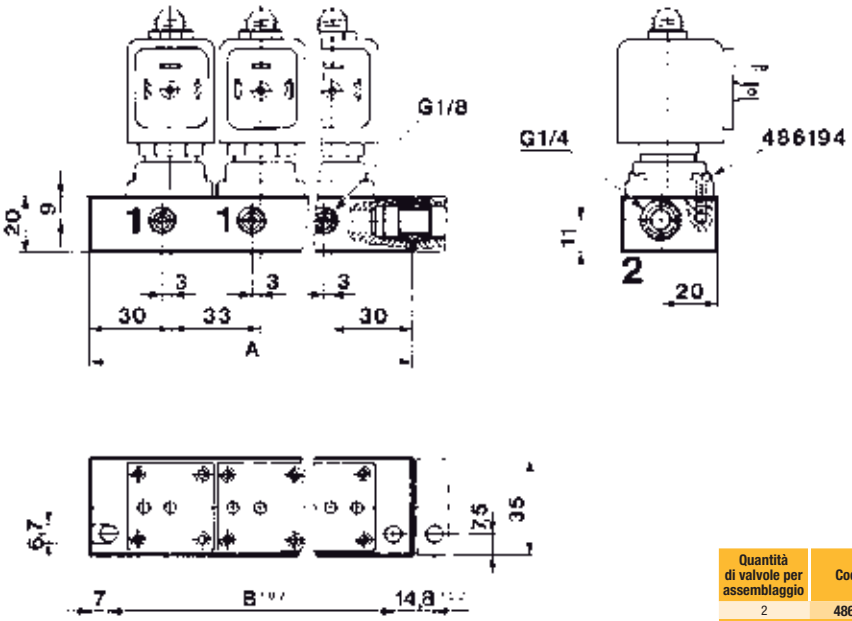

Disegno 2

Quantità di valvole per assemblaggio	Codice	A mm	B mm	Peso g
2	**486162**	93	79	150
3	**486163**	126	112	210
5	**486164**	192	178	420

TABELLA DELLE SOTTOBASI PER VALVOLE (Esempi)

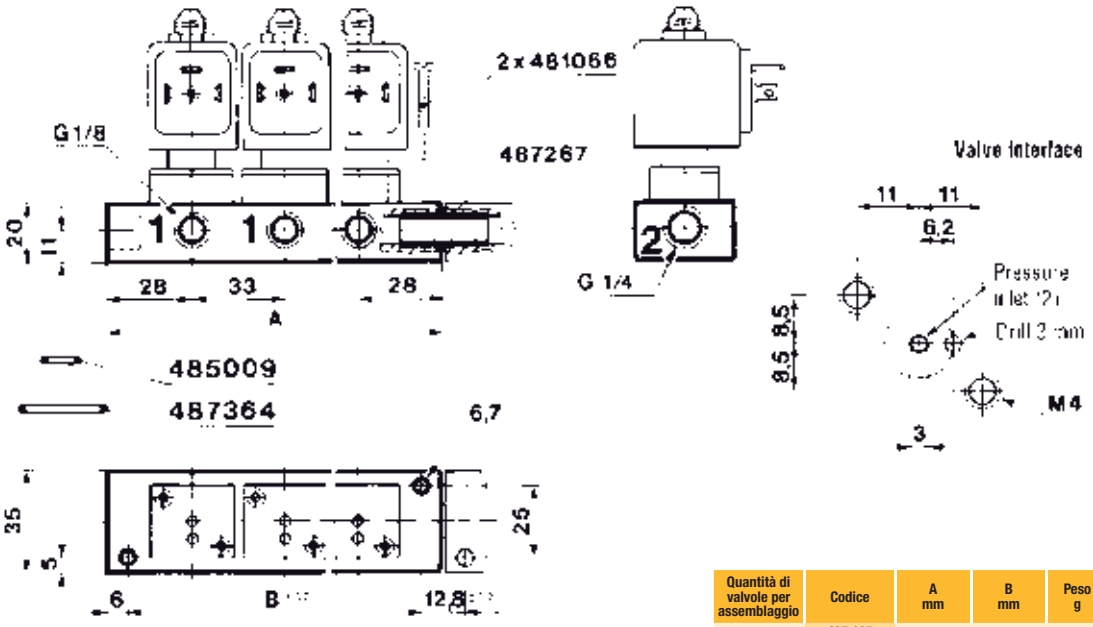

Disegno 3

Quantità di valvole per assemblaggio	Codice	A mm	B mm	Peso g
1	**487.165**	56	44	85
2	**487.167**	89	77	135
3	**487.169**	188	176	300

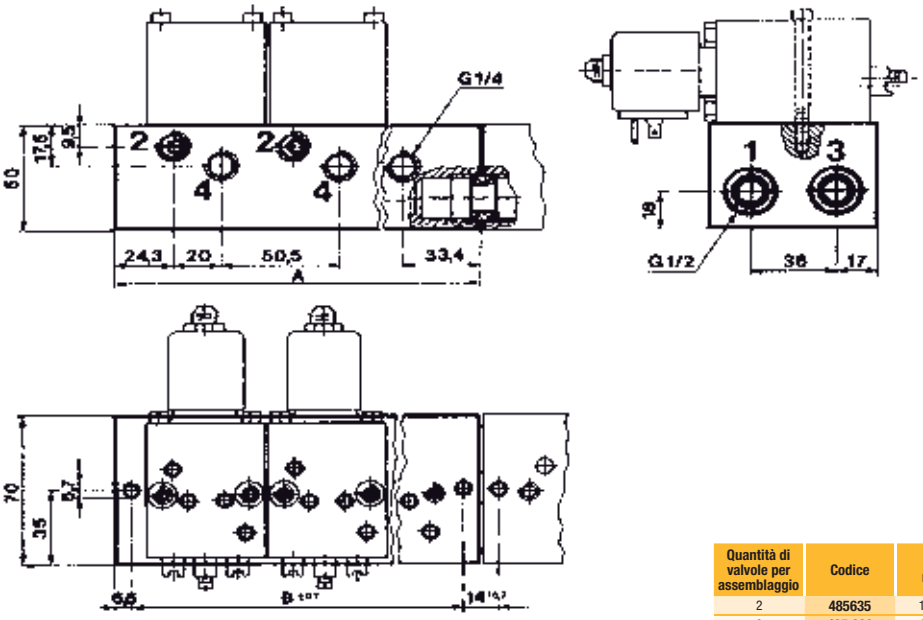

Disegno 4

Quantità di valvole per assemblaggio	Codice	A mm	B mm	Peso g
2	**485635**	128.2	115.0	1.000
3	**485.636**	178.7	165.5	1.400
5	**485.637**	279.7	266.5	2.250

TABELLA DELLE SOTTOBASI PER VALVOLE (Esempi)

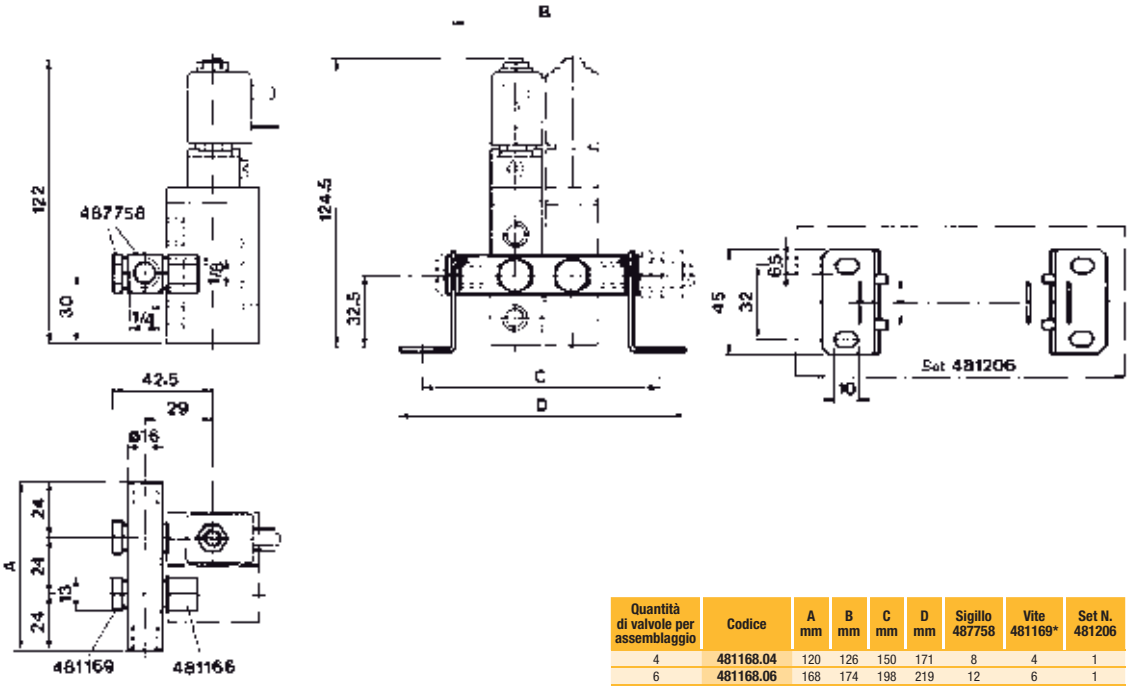

Disegno 5

Quantità di valvole per assemblaggio	Codice	A mm	B mm	C mm	D mm	Sigillo 487758	Vite 481169*	Set N. 481206
4	**481168.04**	120	126	150	171	8	4	1
6	**481168.06**	168	174	198	219	12	6	1
8	**481168.08**	216	222	246	267	16	8	1
10	**481168.10**	264	270	294	315	20	10	1

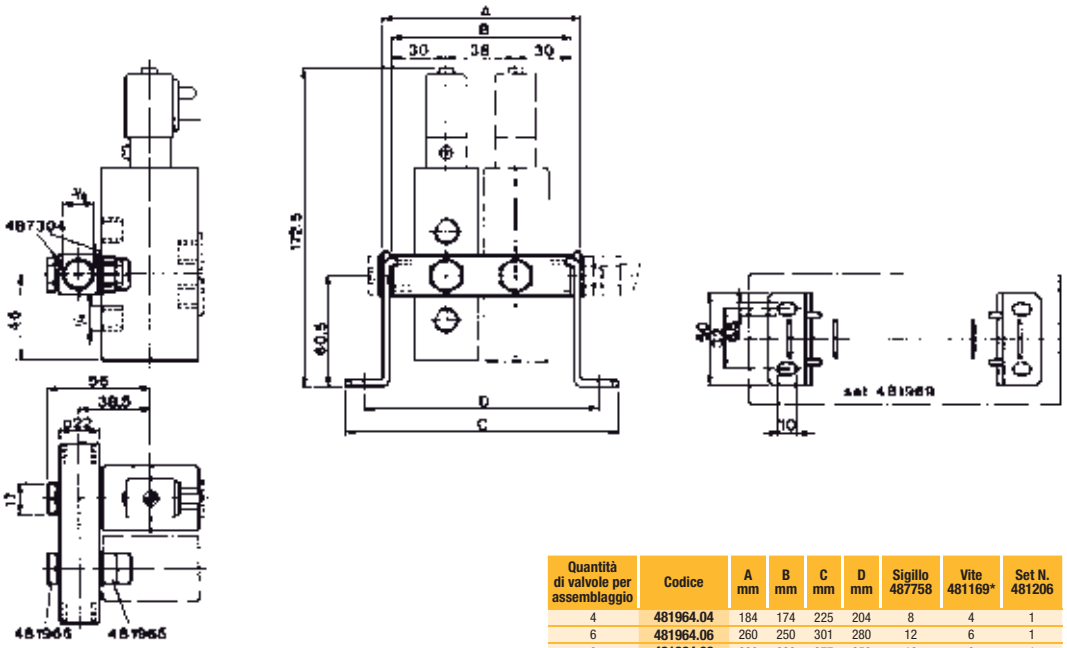

Disegno 6

Quantità di valvole per assemblaggio	Codice	A mm	B mm	C mm	D mm	Sigillo 487758	Vite 481169*	Set N. 481206
4	**481964.04**	184	174	225	204	8	4	1
6	**481964.06**	260	250	301	280	12	6	1
8	**481964.08**	336	326	377	356	16	8	1
10	**481964.10**	412	402	453	432	20	10	1

TABELLA DELLE SOTTOBASI PER VALVOLE (Esempi)

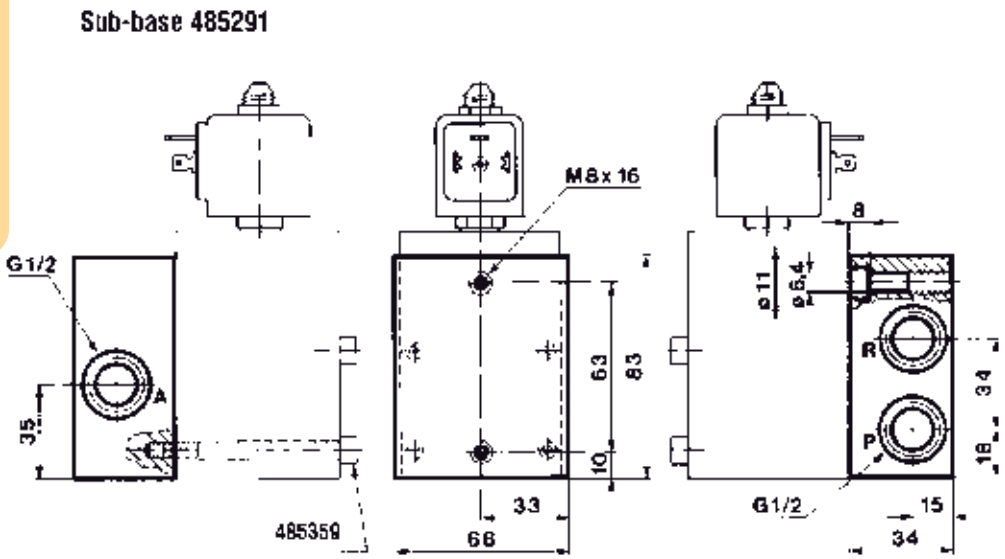

Disegno 7

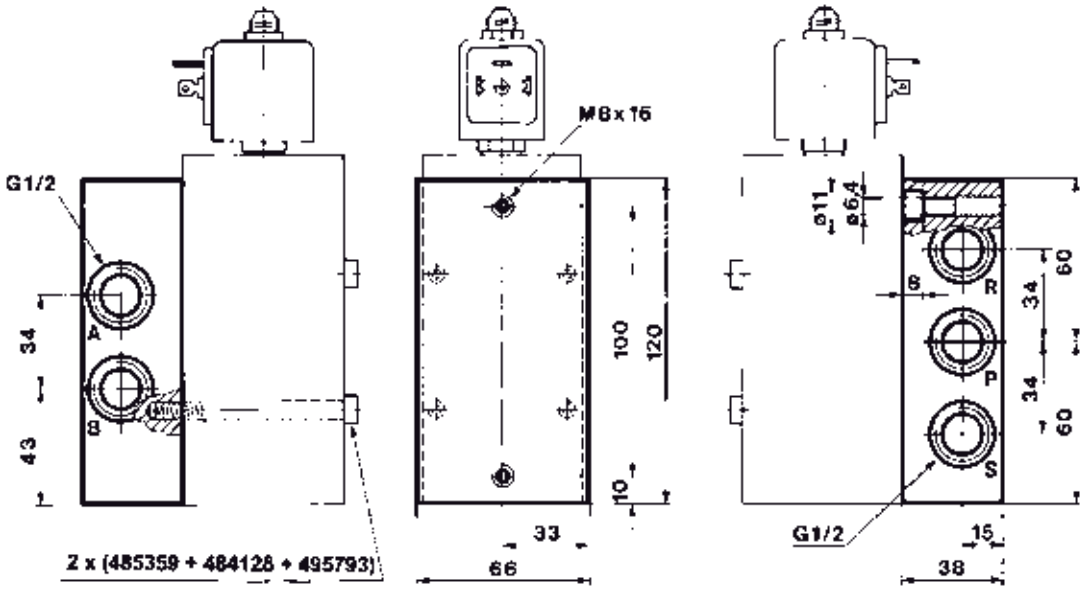

Disegno 8

TABELLA DELLE SOTTOBASI PER VALVOLE (Esempi)

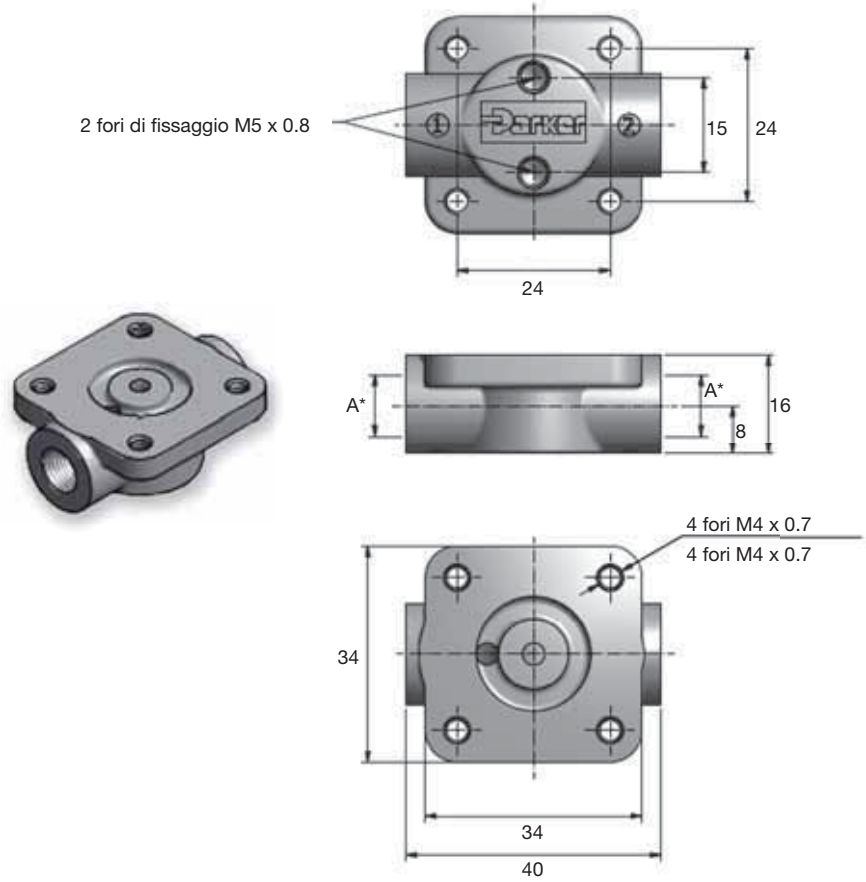

Dim.	Codice	Da usare con	Quantità nella confezione	Viti
1/8"G	XGSPG1	Tutte le versioni	10	Incluse
1/4"G	XGSPG2	Tutte le versioni	10	Incluse

Disegno 9

TABELLA DEI CODICI DI TENSIONE PER BOBINE E COMPONENTI ELETTRICI

In questa tabella sono riportati i codici di tensione più frequenti. Per informazioni sulle altre tensioni rivolgersi a noi.

CODICI TENSIONE			C1	C2	N7	L8	C4	C5		C7	E6	P1	A5	0A	S5	P2	1P	6J	0P	P3	K8
Bobina	Gruppo	Sottogruppo	12 DC	24 DC	28 DC	30 DC	48 DC	110 DC	196 DC	220 DC	100/50	100/50-60	110/50	110-115/50	110-115/50 120/60	110/50-60	110-115/50-60	110-115/60	100/50-115/60	110/50-120/60	115/60
481045	1.1	-	●	●			●	●						●				●			
481180	1.1	-	●	●				●						●							
481530	1.1	-	●	●																	
482605	1.1	-	●	●																	
482606	1.1	-	●	●			●	●						●				●			
483590	1.1	-													●						
488143	1.1	-										●									
488980	1.1	-	●	●			●	●						●				●			
492912	1.1	-		●																	
492919	1.1	-		●																	
495865	1.1	-		●			●							●				●			
496131	1.2	-	●	●			●	●								●					●
496482	1.2	-	●	●			●	●								●					●
496637	1.2	-	●	●			●	●								●					●
WB4.5	1.3	-									●	●								●	
WB5.0	1.3	-	●	●				●													
WB8.0	1.3	-																		●	
481000	2.0	2.1	●	●			●	●		●				●				●			
481865	2.0	2.1	●	●			●	●					●								●
482635	2.0	2.1													●						
482725	2.0	2.1	●	●				●					●								●
483371	2.0	2.1	●	●			●	●		●				●				●			
483510	2.0	2.1													●						
483520	2.0	2.1																			
485100	2.0	2.1		●						●				●							
488553	2.0	2.1										●									
488947	2.0	2.1										●									
491514	2.0	2.1	●	●		●														●	
492070	2.0	2.1	●	●			●	●								●					
492190	2.0	2.1	●	●			●	●		●						●					
492453	2.0	2.1	●	●			●	●					●								
492670	2.0	2.1	●	●			●	●					●								
492726	2.0	2.1		●																	
493640	2.0	2.1		●			●						●							●	
494040	2.0	2.1		●						●				●							
495870	2.0	2.1		●			●	●					●								
495905	2.0	2.1		●			●	●													●
496081	2.0	2.1	●	●											●						
496082	2.0	2.1	●	●																●	
496110	2.0	2.1													●						
HZ10	2.0	2.1																		●	
481044	2.0	2.2											●						●		
483816	2.0	2.2	●	●																	
486265	2.0	2.2	●	●			●						●						●		
492425	2.0	2.2	●	●									●								
492727	2.0	2.2	●	●																	
495880	2.0	2.2		●									●								
496155	2.0	2.2		●			●						●								
HZ11	2.0	2.2	●	●			●													●	
482730	3.0	-		●			●						●								●
482735	3.0	-		●			●														
495875	3.0	2.1		●																	

A1	1W	P6	S2		U3	A7	B7	R5	3D	7J	3P	4K	Q3	S6	F4	J3	P9	A2	B2	P0	A8	B8	Q1	A9	Q2	5P	A4	S4
12/50	12/50-60	200/50-60	200-230/60	208-230/60	208-240/60	220/50	220/60	220/50-60	220-230/50	220-230/60	220-230/50-60	220-240/60	220/50-240/60	220-240/50	230/50	230/60	230/50-60	24/50	24/60	24/50-60	240/50	240/60	240/50-60	380/50	380/50-60	380/50-440/60	48/50	48/50-60
									●	●								●	●								●	
									●		●							●										
									●									●										
									●	●					●			●	●								●	
														●						●								●
		●																										
									●	●								●	●								●	
																				●								●
																												●
									●	●								●									●	
																	●			●								●
																	●			●								●
																	●			●								●
																	●			●								
																	●			●								
●									●			●			●			●	●							●	●	
									●							●		●	●					●			●	
														●														
									●							●		●						●				
●									●			●						●	●								●	
	●													●						●								●
														●						●								
									●									●								●		
		●																										
		●																										
													●						●									
								●									●			●			●					
								●									●			●			●					●
									●									●						●			●	
															●			●				●					●	
									●									●										
													●		●				●									
									●									●								●		
									●									●									●	
															●			●				●					●	
														●						●		●						
					●								●						●									
														●						●								●
													●						●									
			●			●	●								●			●	●					●				
																		●										
			●			●	●								●			●						●				
															●			●										
															●			●										
															●			●										
															●			●										
													●		●			●	●									
									●																		●	
									●																		●	
									●																			

TABELLA DEI CODICI DI TENSIONE PER BOBINE E COMPONENTI ELETTRICI

In questa tabella sono riportati i codici di tensione più frequenti. Per informazioni sulle altre tensioni rivolgersi a noi.

CODICI TENSIONE			C1	C2	N7	L8	C4	C5		C7	E6	P1	A5	0A	S5	P2	1P	6J	0P	P3	K8
Bobina	Gruppo	Sottogruppo	12 DC	24 DC	28 DC	30 DC	48 DC	110 DC	196 DC	220 DC	100/50	100/50-60	110/50	110-115/50	110-115/50 120/60	110/50-60	110-115/50-60	110-115/60	100/50-115/60	110/50-120/60	115/60
484990	4.0	-										●					●				
485400	4.0	-	●	●			●	●													
495915	4.0	-		●			●										●				
482740	6.0	-		●			●	●													
482745	6.0	-		●																	
495900	6.0	-	●	●			●	●													●
496125	6.0	-		●			●	●													
483580.01	7.0	-			●																
488650.01	7.0	-			●																
488660.01	7.0	-			●																
488670.01	7.0	-			●																
490885	7.0	-				●															
490890	7.0	-			●	●															
495910	8.0	-			●																
492210	9.0	-		●																	
492965.01	9.0	-			●																
496565	9.0	-			●																
492300	10.1	-	●	●			●	●		●						●					
492310	10.1	-	●	●			●	●		●						●					
496560	10.1	-		●			●	●								●					
496800	10.1	-		●			●	●								●					
496800.02	10.1	-		●			●	●								●					
496895	10.1	-		●			●	●								●					
496555	10.2	-		●			●	●								●					
496700	10.2	-		●			●	●								●					
496700.02	10.2	-		●			●	●								●					
497105	10.3	-	●	●			●	●									●				
483270	11.0	-	●	●			●	●									●				
483270.02	11.0	-	●	●			●	●									●				
492335	12.0	-				●															
482870.01	12.0	-			●																
495294	13.0	-	●	●																	
496193	13.0	-	●	●																	
483824	14.1	-																			
483764	14.2	-																			
483541	14.3	-																			
YB09	20.1	-																●		●	
YB12	20.1	-	●	●																	
ZB09	20.1	-	●	●				●				●					●			●	
ZB12	20.1	-	●	●			●	●													
ZB14	20.2	-										●								●	
ZB16	20.2	-	●	●				●													
ZH14	20.2	-																		●	
ZH16	20.2	-	●	●																	
JB14	21.0	-																			
JB16	21.0	-	●	●					●												
KH09	22.0	-																			
KP10	22.0	-	●	●																	
KT09	22.0	-												●							
XT09	23.0	-																			
D4	24.0	-		●																●	
D5	24.0	-		●									●								●
LA	24.0	-		●																●	
LB-LC	24.0	-		●																●	
XS03	24.0	-																		●	

A1	1W	P6	S2		U3	A7	B7	R5	3D	7J	3P	4K	Q3	S6	F4	J3	P9	A2	B2	P0	A8	B8	Q1	A9	Q2	5P	A4	S4
12/50	12/50-60	200/50-60	200-230/60	208-230/60	208-240/60	220/50	220/60	220/50-60	220-230/50	220-230/60	220-230/50-60	220-240/60	220/50-240/60	220-240/50	230/50	230/60	230/50-60	24/50	24/60	24/50-60	240/50	240/60	240/50-60	380/50	380/50-60	380/50-440/60	48/50	48/50-60
		●									●									●								●
											●									●								●
															●			●				●					●	
								●									●			●			●					●
								●									●			●			●					●
																	●			●								●
																	●			●								●
																	●			●								●
																	●			●								●
																	●			●								●
																	●			●								●
											●									●								
											●																	
											●									●								
							●																					
							●																●					
							●																					
					●												●		●	●			●					
	●				●												●		●	●			●		●			●
	●																●			●			●		●			●
																	●			●								
																	●			●			●					
															●			●										
				●					●						●			●			●							
															●													
													●						●									
									●							●		●	●									
					●								●					●	●									
													●						●									
													●							●								

INDICE PER RIFERIMENTO BOBINA

Codice bobina	Gruppo bobine	Descrizione	Assorbimento CC Pn (W)	Assorbimento CA Pn (W)	Temperatura ambiente	UL	Grado di protezione	Protezione ATEX o NEMA 4X (gas)	Pagina
481000	2.0/2.1	Bobina con morsetto a vite, 40 mm	8.0	8.0	Da -40°C a +50°C	-	IP 44 to 67	-	474
481044	2.0/2.2	Bobina con morsetto a vite, potenza elevata, 40 mm	-	14.0	Da -40°C a +50°C	-	IP 44 to 67	-	475
481180	1.1	Bobina per collegamento con spina DIN, 22 mm	5.0	4.0	Da -40°C a +50°C	-	IP65	-	453
481865	2.0/2.1	Bobina per collegamento con spina DIN, 32 mm	9.0	8.0	Da -40°C a +50°C	-	IP65	-	446
482605	1.1	Componente elettrico incapsulato a prova di esplosione "mb", 32 mm	5.0	4.0	Da -40°C a +65°C	-	IP65	II 2 G Ex mb IIC T4/T5	494
482606	1.1	Componente elettrico incapsulato a prova di esplosione "mb", bassa potenza, 32 mm	2.5	2.0	Da -40°C a +65°C	-	IP65	II 2 G Ex mb IIC T4/T5	494
482730	3.0	Bobina per collegamento con spina DIN, potenza ridotta, 32 mm	7.0	6.0	Da -40°C a +50°C	-	IP65	-	448
482740	6.0	Bobina per collegamento con spina DIN, bassa potenza, 32 mm	1.6	-	Da -40°C a +50°C	-	IP65	-	449
482870.01	12.0	Componente elettrico intrinsecamente sicuro a prova di esplosione "ia", 50 mm	3.0	-	Da -40°C a +65°C	-	IP66	II 1 G Ex ia IIC T6	512
483270	11.0	Componente elettrico antideflagrante "db", 50 mm	8.0	8.0	Da -40°C a +80°C	-	IP66	II 2 G Ex db IIC T4/T5/T6	492
483371	2.0/2.1	Componente elettrico a sicurezza aumentata a prova di esplosione "eb", 50 mm	8.0	8.0	Da -40°C a +65°C	-	IP67	II 2 G Ex eb IIC T4	504
483510	2.0/2.1	Bobina per collegamento con spina DIN, 32 mm	-	9.0	Da -40°C a +50°C	-	IP65	-	446
483520	2.0/2.1	Bobina con morsetto a vite, doppia frequenza, 40 mm	-	9.0	Da -40°C a +50°C	-	IP 44 to 67	-	474
483541	14.3	Bobina con morsetto a vite, temperatura e potenza elevate, 40 mm	20.0	20.0	Da -40°C a +50°C	-	IP 44 to 67	-	478
483580.01	7.0	Componente elettrico intrinsecamente sicuro a prova di esplosione "ia", 32 mm	3.0	-	Da -40°C a +55°C	-	IP65	II 1 G Ex ia IIC T6	508
483590	1.1	Bobina per collegamento con spina DIN, doppia frequenza, 22 mm	-	3.0	Da -40°C a +50°C	-	IP65	-	455
483764	14.2	Bobina per collegamento con spina DIN, 32 mm, UL	-	9.0	Da -40°C a +50°C	-	IP65	-	451
483816	2.2	Bobina per collegamento con spina DIN per valvole a getto, 32 mm	14.0	14.0	Da -40°C a +50°C	-	IP65	-	452
483824	14.1	Bobina con morsetto a vite, temperatura e potenza elevate, 40 mm	19.0	19.0	Da -40°C a +50°C	-	IP 44 to 67	-	477
484990	4.0	Bobina con morsetto a vite, bistabile, per applicazioni a impulsi, 40 mm	-	11.0	Da -40°C a +50°C	-	IP44	-	480
485100	2.0/2.1	Bobina con morsetto a vite, temperatura elevata, 40 mm	8.0	8.0	Da -40°C a +50°C	-	IP 44 to 67	-	476
485400	4.0	Bobina con morsetto a vite, bistabile, per applicazioni a impulsi, 40 mm	13.0	-	Da -40°C a +50°C	-	IP44	-	480
486265	2.0/2.2	Bobina con morsetto a vite, temperatura e potenza elevate, 40 mm	14.0	14.0	Da -40°C a +50°C	-	IP 44 to 67	-	476
488143	1.1	Bobina per collegamento con spina DIN, doppia frequenza, 22 mm	-	2.5	Da -40°C a +50°C	-	IP65	-	456
488553	2.0/2.1	Bobina con morsetto a vite, doppia frequenza, classe H, 40 mm	-	9.0	Da -40°C a +50°C	-	IP 44 to 67	-	479
488650.01	7.0	Componente elettrico intrinsecamente sicuro a prova di esplosione "ia", 50 mm	0.3 to 3.0	-	Da -40°C a +65°C	-	IP66	II 1 G Ex ia IIC T6	513
488660.01	7.0	Componente elettrico intrinsecamente sicuro a prova di esplosione "ia", 50 mm	3.0	-	Da -40°C a +65°C	-	IP67	II 1 G Ex ia IIC T6	514
488670.01	7.0	Componente elettrico intrinsecamente sicuro a prova di esplosione "ia", 50 mm	0.3 to 3.0	-	Da -40°C a +65°C	-	IP65	II 1 G Ex ia IIC T6	515
488980	1.1	Bobina per collegamento con spina DIN, bassa potenza, 22 mm	2.5	2.0	Da -40°C a +50°C	-	IP65	-	453
490885	7.0	Componente elettrico intrinsecamente sicuro a prova di esplosione, "NEMA", 50 mm	3.0	-	Da -40°C a +60°C	-	NEMA 4 - 4X	Cl. I, Div.I, Gr. A, B, C, D	513
490890	7.0	Componente elettrico intrinsecamente sicuro a prova di esplosione, "NEMA", 50 mm	3.0	-	Da -40°C a +60°C	-	NEMA 4 - 4X	Cl. I, Div.I, Gr. A, B, C, D	514
491514	2.0/2.1	Bobina per collegamento con spina DIN, 32 mm, UL	-	11.0	Da -40°C a +50°C	●	IP65	-	450
492070	2.0/2.1	Componente elettrico incapsulato a prova di esplosione "mb", con alloggiamento in metallo impermeabile, 50 mm	8.0	9.0	Da -40°C a +65°C	-	IP67	II 2 G Ex mb IIC T4/T5	496
492190	2.0/2.1	Componente elettrico incapsulato a prova di esplosione e a prova di esplosione "eb", 50 mm	9.0	11.0	Da -40°C a +75°C	-	IP66	II 2 G Ex eb mb IIC T3/T4	507
492210	9.0	Componente elettrico incapsulato a sicurezza aumentata e a prova di esplosione "eb", "booster", 50 mm	1.0 to 1.8	-	Da -40°C a +75°C	-	IP66	II 2 G Ex eb mb IIC T5/T6	506
492310	10.1	Componente elettrico incapsulato a sicurezza aumentata e a prova di esplosione "eb", 50 mm	6.0	6.0	Da -40°C a +75°C	-	IP66	II 2 G Ex eb mb IIC T4/T5	505
492335	12.0	Componente elettrico intrinsecamente sicuro a prova di esplosione, "NEMA", 50 mm	3.0	-	Da -40°C a +60°C	-	NEMA 4 - 4X	Cl. I, Div.I, Gr. A, B, C, D	512
492425	2.0/2.2	Bobina per collegamento con spina DIN, temperatura elevata, 32 mm	14.0	14.0	Da -40°C a +50°C	-	IP65	-	447
492453	2.0/2.1	Bobina per collegamento con spina DIN, temperatura elevata, 32 mm	9.0	8.0	Da -40°C a +50°C	-	IP65	-	447
492670	2.0/2.1	Componente elettrico incapsulato a prova di esplosione "mb", 32 mm	9.0	8.0	Da -40°C a +50°C	-	IP65	II 2 G Ex mb IIC T4	495
492912	1.1	Bobina per collegamento con spina DIN, 22 mm, UL	4.0	3.0	Da -40°C a +50°C	●	IP65	-	454
492965.01	9.0	Componente elettrico intrinsecamente sicuro a prova di esplosione "ia", "booster", 50 mm	0.3 to 2.3	-	Da -40°C a +65°C	-	IP66	II 1 G Ex ia IIC T6	511
493640	2.0/2.1	Componente elettrico incapsulato antideflagrante "db mb", doppia frequenza	8.0	8.0	Da -40°C a +75°C	-	IP65	II 2 G Ex db mb IIC T4/T5	503
494040	2.0/2.1	Componente elettrico a sicurezza aumentata a prova di esplosione "eb", 50 mm	8.0	8.0	Da -40°C a +90°C	-	IP67	II 2 G Ex eb IIC T3/T4	504
495294	13.0	Bobina con connettore DIN ISO, 12 - 24 V CC, per applicazioni di trasporto, 32 mm	9.0	-	Da -40°C a +120°C	-	IP69K	-	481
495865	1.1	Componente elettrico a prova di esplosione "nc AC", bassa potenza, 22 mm	2.5	2.0	Da -40°C a +50°C	-	IP65	II 3 G Ex nAc nCc IIC T5	484
495870	2.0/2.1	Componente elettrico a prova di esplosione "nc AC", 32 mm	9.0	8.0	Da -40°C a +50°C	-	IP65	II 3 G Ex nAc nCc IIC T3/T4	486

INDICE PER RIFERIMENTO BOBINA

Codice bobina	Gruppo bobine	Descrizione	Assorbimento CC Pn (W)	Assorbimento CA Pn (W)	Temperatura ambiente	UL	Grado di protezione	Protezione ATEX o NEMA 4X (gas)	Pagina
495875	3.0	Componente elettrico a prova di esplosione "nc AC", 32 mm	7.0	6.0	Da -40°C a +50°C	-	IP65	II 3 G Ex nAc nCc IIC T3/T4	488
495880	2.0/2.2	Componente elettrico a prova di esplosione "nc AC", 32 mm	14.0	14.0	Da -40°C a +50°C	-	IP65	II 3 G Ex nAc nCc IIC T3	489
495900	6.0	Componente elettrico incapsulato antideflagrante "db mb", bassa potenza, 37 mm	2.0	2.5	Da -40°C a +65°C	-	IP67	II 2 G Ex db mb IIC T4 / T5/T6	499
495905	2.0/2.1	Componente elettrico incapsulato antideflagrante "db mb", 37 mm	8.0	8.0	Da -40°C a +65°C	-	IP67	II 2 G Ex db mb IIC T4	500
495910	8.0	Componente elettrico intrinsecamente sicuro a prova di esplosione "ia", "booster", 37 mm	0.3 to 1.2	-	Da -40°C a +80°C	-	IP67	II 1 G Ex ia IIC T4/T5/T6	509
495915	4.0	Componente elettrico a sicurezza aumentata a prova di esplosione "nc AC", 50 mm	13.0	11.0	Da -40°C a +65°C	-	IP67	II 3 G Ex nAc nCc IIC T3	490
496081	2.0/2.1	Bobina con cavi volanti, IP67, 32 mm	9.0	9.0	Da -40°C a +50°C		IP67	-	472
496082	2.0/2.2	Bobina con cavi volanti, IP67, 32 mm, UL	16.0	13.0-14.0	Da -40°C a +120°C	●	IP67	-	473
496110	2.0/2.1	Componente elettrico a prova di esplosione "nc AC", 32 mm	-	9.0	Da -40°C a +50°C	-	IP65	II 3 G Ex nAc nCc IIC T3/T4	486
496125	6.0	Componente elettrico a prova di esplosione "nc AC", bassa potenza, 32 mm	1.6	-	Da -40°C a +50°C	-	IP65	II 3 G Ex nAc nCc IIC T5/T6	487
496131	1.2	Bobina per collegamento con spina DIN, doppia frequenza, 22 mm	3.0	3.0	Da -40°C a +50°C	-	IP65	-	457
496155	2.0/2.2	Componente elettrico a sicurezza aumentata a prova di esplosione "nc AC", 50 mm	14.0	14.0	Da -40°C a +65°C	-	IP67	II 3 G Ex nAc nCc IIC T3	491
496193	13.0	Bobina con connettore DIN ISO, 12 - 24 V CC, per applicazioni di trasporto, 32 mm	9.0	-	Da -40°C a +120°C	-	IP69K	-	481
496482	1.2	Bobina per collegamento con spina DIN, doppia frequenza, 22 mm	3.0	3.0	Da -40°C a +50°C	-	IP65	-	458
496555	10.2	Componente elettrico incapsulato antideflagrante "db mb", 37 mm	6.0	6.0	Da -40°C a +65°C	-	IP67	II 2 G Ex db mb IIC T4/T5/T6	501
496560	10.1	Componente elettrico incapsulato antideflagrante "db mb", 37 mm	8.0	8.0	Da -40°C a +65°C	-	IP67	II 2 G Ex db mb IIC T4	501
496565	9.0	Componente elettrico intrinsecamente sicuro a prova di esplosione "ia","booster", 37 mm	0.77 to 2.58	-	Da -40°C a +80°C	-	IP67	II 1 G Ex ia IIC T4/T5/T6	510
496637	1.2	Componente elettrico a prova di esplosione "nc AC", doppia frequenza, 22 mm	3.0	3.0	Da -20°C a +50°C	-	IP65	II 3 D Ex TC IIIC T 95°C	485
496700	10.2	Componente elettrico incapsulato antideflagrante "db mb", 37 mm	6.0	6.0	Da -40°C a +65°C	-	IP67	II 2 G Ex db mb IIC T4 / T5 / T6	502
496800	10.1	Componente elettrico incapsulato antideflagrante "db mb", 37 mm	8.0	8.0	Da -40°C a +65°C	-	IP67	II 2 G Ex db mb IIC T4	502
496895	10.1	Bobina per collegamento con spina DIN per olio e gas, 37 mm	8.0	8.0	Da -40°C a +50°C	-	IP65	-	468
497105	10.3	Componente elettrico antideflagrante "db"	8.0	8.0	Da -50°C a +80°C	-	IP66	II 2 G Ex db IIC T4/T5/T6	493
D4	24.0	Bobina per collegamento con spina DIN, 32 mm, UL	16.0	13.0	Da -40°C a +50°C	●	IP65	-	465
D5	24.0	Bobina per collegamento con spina DIN, 32 mm	9.0	8.0	Da -40°C a +50°C	-	IP65	-	466
HZ10	2.0/2.1	Componente elettrico incapsulato a prova di esplosione "mb", doppia frequenza	8.0	8.0	Da -40°C a +85°C	-	IP65	II 2 G Ex mb IIC T3/T4/T5	497
HZ11	2.0/2.2	Componente elettrico incapsulato a prova di esplosione "mb", doppia frequenza	14.0	14.0	Da -40°C a +85°C	-	IP65	II 2 G Ex mb IIC T3/T4/T5	498
JB14	21.0	Bobina per collegamento con spina DIN	16.0	-	Da -10°C a +50°C	-	IP65	-	462
JB16	21.0	Bobina per collegamento con spina DIN	-	14.0	Da -10°C a +50°C	-	IP65	-	462
KH09	22.0	Bobina per collegamento con spina DIN	-	9.0	Da -10°C a +80°C	-	IP65	-	463
KT09	22.0	Bobina per collegamento con spina DIN	-	9.0	Da -10°C a +50°C	-	IP65	-	463
KT10	22.0	Bobina per collegamento con spina DIN	10.0	-	Da -10°C a +50°C	-	IP65	-	463
LA	24.0	Bobina con cavi volanti, IP67, 32 mm	9.0	9.0	Da -10°C a +50°C	-	IP67	-	470
LB-LC	24.0	Bobina con cavi volanti, 32 mm, UL	16.0	13.0-14.0	Da -10°C a +50°C	●	IP67	-	471
WB4.5	1.3	Bobina per collegamento con spina DIN, 22 mm	-	4.5	Da -10°C a +50°C	-	IP65	-	459
WB4.5 UR	1.3	Bobina per collegamento con spina DIN, 22 mm	-	4.5	Da -10°C a +50°C	●	IP65	-	459
WB5.0	1.3	Bobina per collegamento con spina DIN, 22 mm	5.0	-	Da -10°C a +50°C	-	IP65	-	459
WB5.0 cURus	1.3	Bobina per collegamento con spina DIN, 22 mm	5.0	-	Da -10°C a +50°C	●	IP65	-	459
WB8.0	1.3	Bobina per collegamento con spina DIN, 22 mm	-	8.0	Da -10°C a +50°C	-	IP65	-	459
XS03	24.0	Bobina per collegamento con spina DIN, 32 mm	-	9.0	Da -40°C a +50°C	-	IP65	-	467
XT09	23.0	Bobina per collegamento con spina DIN	-	9.0	Da -10°C a +50°C	-	IP54	-	464
YB09	20.1	Bobina con cavi volanti, IP67, UL per CA	-	9.0	Da -10°C a +50°C	●	IP67	-	469
YB12	20.1	Bobina con cavi volanti, IP67	12.0	-	Da -10°C a +50°C	-	IP67	-	469
ZB09	20.0	Bobina per collegamento con spina DIN, UL per CA	-	9.0	Da -10°C a +50°C	●	IP65	-	460
ZB12	20.0	Bobina per collegamento con spina DIN	12.0	-	Da -10°C a +50°C	-	IP65	-	460
ZB14	20.2	Bobina per collegamento con spina DIN, serie potenza e temperatura elevate	-	14.0	Da -10°C a +50°C	-	IP65	-	461
ZB16	20.2	Bobina per collegamento con spina DIN, serie potenza e temperatura elevate	16.0	-	Da -10°C a +50°C	-	IP65	-	461
ZH14	20.2	Bobina per collegamento con spina DIN, serie potenza e temperatura elevate	-	14.0	Da -10°C a +80°C	-	IP65	-	461
ZH16	20.2	Bobina per collegamento con spina DIN, serie potenza e temperatura elevate	16.0	-	Da -10°C a +80°C	-	IP65	-	461

INDICE PER GRUPPO BOBINE

Gruppo bobine	Codice bobina	Descrizione	Assorbimento CC Pn (W)	Assorbimento CA Pn (W)	Temperatura ambiente	UL	Grado di protezione	Protezione ATEX o NEMA 4X (gas)	Pagina
1.1	488980	Bobina per collegamento con spina DIN, bassa potenza, 22 mm	2.5	2.0	Da -40°C a +50°C	-	IP65	-	453
1.1	492912	Bobina per collegamento con spina DIN, UL, 22 mm	4.0	3.0	Da -40°C a +50°C	●	IP65	-	454
1.1	481180	Bobina per collegamento con spina DIN, 22 mm	5.0	4.0	Da -40°C a +50°C	-	IP65	-	453
1.1	488143	Bobina per collegamento con spina DIN, doppia frequenza, 22 mm	-	2.5	Da -40°C a +50°C	-	IP65	-	456
1.1	483590	Bobina per collegamento con spina DIN, doppia frequenza, 22 mm	-	3.0	Da -40°C a +50°C	-	IP65	-	455
1.1	495865	Componente elettrico a prova di esplosione "nc AC", bassa potenza, 22 mm	2.5	2.0	Da -40°C a +50°C	-	IP65	II 3 G Ex nAc nCc IIC T5	484
1.1	482606	Componente elettrico incapsulato a prova di esplosione "mb", bassa potenza, 32 mm	2.5	2.0	Da -40°C a +65°C	-	IP65	II 2 G Ex mb IIC T4/T5	494
1.1	482605	Componente elettrico incapsulato a prova di esplosione "mb", 32 mm	5.0	4.0	Da -40°C a +65°C	-	IP65	II 2 G Ex mb IIC T4/T5	494
1.2	496131	Bobina per collegamento con spina DIN, doppia frequenza, 22 mm	3.0	3.0	Da -40°C a +50°C	-	IP65	-	457
1.2	496482	Bobina per collegamento con spina DIN, doppia frequenza, 22 mm	3.0	3.0	Da -40°C a +50°C	-	IP65	-	458
1.2	496637	Componente elettrico a prova di esplosione "nc AC", 22 mm, doppia frequenza	3.0	3.0	Da -20°C a +50°C	-	IP65	II 3 D Ex tc IIC T 95°C	485
1.3	WB5.0	Bobina per collegamento con spina DIN, 22 mm	5.0	-	Da -10°C a +50°C	-	IP65	-	459
1.3	WB5.0 cURus	Bobina per collegamento con spina DIN, 22 mm	5.0	-	Da -10°C a +50°C	●	IP65	-	459
1.3	WB4.5	Bobina per collegamento con spina DIN, 22 mm	-	4.5	Da -10°C a +50°C	-	IP65	-	459
1.3	WB4.5 UR	Bobina per collegamento con spina DIN, 22 mm	-	4.5	Da -10°C a +50°C	●	IP65	-	459
1.3	WB8.0	Bobina per collegamento con spina DIN, 22 mm	-	8.0	Da -10°C a +50°C	-	IP65	-	459
2.0/2.1	481000	Bobina con morsetto a vite, 40 mm	8.0	8.0	Da -40°C a +50°C	-	IP 44 a 67	-	474
2.0/2.1	485100	Bobina con morsetto a vite, temperatura elevata, 40 mm	8.0	8.0	Da -40°C a +50°C	-	IP 44 a 67	-	476
2.0/2.1	481865	Bobina per collegamento con spina DIN, 32 mm	9.0	8.0	Da -40°C a +50°C	-	IP65	-	446
2.0/2.1	492453	Bobina per collegamento con spina DIN, temperatura elevata, 32 mm	9.0	8.0	Da -40°C a +50°C	-	IP65	-	447
2.0/2.1	496081	Bobina con cavi volanti, IP67, 32 mm	9.0	9.0	Da -10°C a +50°C	-	IP67	-	472
2.0/2.1	483510	Bobina per collegamento con spina DIN, 32 mm	-	9.0	Da -40°C a +50°C	-	IP65	-	446
2.0/2.1	483520	Bobina con morsetto a vite, doppia frequenza, 40 mm	-	9.0	Da -40°C a +50°C	-	IP 44 a 67	-	474
2.0/2.1	488553	Bobina con morsetto a vite, doppia frequenza, classe H, 40 mm	-	9.0	Da -40°C a +50°C	-	IP 44 a 67	-	479
2.0/2.1	491514	Bobina per collegamento con spina DIN, 32 mm, UL	-	11.0	Da -40°C a +50°C	●	IP65	-	450
2.0/2.1	495870	Componente elettrico a prova di esplosione "nc AC", 32 mm	9.0	8.0	Da -40°C a +50°C	-	IP65	II 3 G Ex nAc nCc IIC T3/T4	486
2.0/2.1	496110	Componente elettrico a prova di esplosione "nc AC", 32 mm	-	9.0	Da -40°C a +50°C	-	IP65	II 3 G Ex nAc nCc IIC T3/T4	486
2.0/2.1	492670	Componente elettrico incapsulato a prova di esplosione "mb", 32 mm	9.0	8.0	Da -40°C a +50°C	-	IP65	II 2 G Ex mb IIC T4	495
2.0/2.1	492070	Componente elettrico incapsulato a prova di esplosione "mb", con alloggiamento in metallo impermeabile, 50 mm	8.0	9.0	Da -40°C a +65°C	-	IP67	II 2 G Ex mb IIC T4/T5	496
2.0/2.1	493640	Componente elettrico incapsulato antideflagrante "db mb", doppia frequenza	8.0	8.0	Da -40°C a +75°C	-	IP65	II 2 G Ex db mb IIC T4/T5	503
2.0/2.1	495905	Componente elettrico incapsulato antideflagrante "db mb", 37 mm	8.0	8.0	Da -40°C a +65°C	-	IP67	II 2 G Ex db mb IIC T4	500
2.0/2.1	494040	Componente elettrico a sicurezza aumentata a prova di esplosione "eb", 50 mm	8.0	8.0	Da -40°C a +90°C	-	IP67	II 2 G Ex eb IIC T3/T4	504
2.0/2.1	483371	Componente elettrico a sicurezza aumentata a prova di esplosione "eb", 50 mm	8.0	8.0	Da -40°C a +65°C	-	IP67	II 2 G Ex eb IIC T4	504
2.0/2.1	492190	Componente elettrico incapsulato a sicurezza aumentata e a prova di esplosione "eb", 50 mm	9.0	11.0	Da -40°C a +75°C	-	IP66	II 2 G Ex eb mb IIC T3/T4	507
2.0/2.1	HZ10	Componente elettrico incapsulato a prova di esplosione "mb", doppia frequenza	8.0	8.0	Da -40°C a +85°C	-	IP65	II 2 G Ex mb IIC T3/T4/T5	497
2.0/2.2	486265	Bobina con morsetto a vite, temperatura e potenza elevate, 40 mm	14.0	14.0	Da -40°C a +50°C	-	IP 44 a 67	-	476
2.0/2.2	492425	Bobina per collegamento con spina DIN, temperatura elevata, 32 mm	14.0	14.0	Da -40°C a +50°C	-	IP65	-	447
2.0/2.2	481044	Bobina con morsetto a vite, potenza elevata, 40 mm	-	14.0	Da -40°C a +50°C	-	IP 44 a 67	-	475
2.0/2.2	495880	Componente elettrico a prova di esplosione "nc AC", 32 mm	14.0	14.0	Da -40°C a +50°C	-	IP65	II 3 G Ex nAc nCc IIC T3	489
2.0/2.2	496082	Bobina con cavi volanti, IP67, 32 mm, UL	16.0	13.0-14.0	Da -40°C a +120°C	●	IP67	-	473
2.0/2.2	496155	Componente elettrico a sicurezza aumentata a prova di esplosione "nc AC", 50 mm	14.0	14.0	Da -40°C a +65°C	-	IP67	II 3 G Ex nAc nCc IIC T3	491
2.0/2.2	HZ11	Componente elettrico incapsulato a prova di esplosione "mb", doppia frequenza	14.0	14.0	Da -40°C a +85°C	-	IP65	II 2 G Ex mb IIC T3/T4/T5	498
2.2	483816	Bobina per collegamento con spina DIN per valvole a getto, 32 mm	14.0	14.0	Da -40°C a +50°C	-	IP65	-	452
3.0	482730	Bobina per collegamento con spina DIN, potenza ridotta, 32 mm	7.0	6.0	Da -40°C a +50°C	-	IP65	-	448
3.0	495875	Componente elettrico a prova di esplosione "nc AC", 32 mm	7.0	6.0	Da -40°C a +50°C	-	IP65	II 3 G Ex nAc nCc IIC T3/T4	488
4.0	485400	Bobina con morsetto a vite, bistabile, per applicazioni a impulsi, 40 mm	13.0	-	Da -40°C a +50°C	-	IP44	-	480
4.0	484990	Bobina con morsetto a vite, bistabile, per applicazioni a impulsi, 40 mm	-	11.0	Da -40°C a +50°C	-	IP44	-	480
4.0	495915	Componente elettrico a sicurezza aumentata a prova di esplosione "nc AC", 50 mm	13.0	11.0	Da -40°C a +65°C	-	IP67	II 3 G Ex nAc nCc IIC T3	490

INDICE PER GRUPPO BOBINE

Gruppo bobine	Codice bobina	Descrizione	Assorbimento CC Pn (W)	Assorbimento CA Pn (W)	Temperatura ambiente	UL	Grado di protezione	Protezione ATEX o NEMA 4X (gas)	Pagina
6.0	482740	Bobina per collegamento con spina DIN, bassa potenza, 32 mm	1.6	-	Da -40°C a +50°C	-	IP65	-	449
6.0	496125	Componente elettrico a prova di esplosione "nc AC", bassa potenza, 32 mm	1.6	-	Da -40°C a +50°C	-	IP65	II 3 G Ex nAc nCc IIC T5/T6	487
6.0	495900	Componente elettrico incapsulato antideflagrante "db mb", bassa potenza, 37 mm	2.0	2.5	Da -40°C a +65°C	-	IP67	II 2 G Ex db mb IIC T4 / T5/T6	499
7.0	483580.01	Componente elettrico intrinsecamente sicuro a prova di esplosione "ia", 32 mm	3.0	-	Da -40°C a +55°C	-	IP65	II 1 G Ex ia IIC T6	508
7.0	488660.01	Componente elettrico intrinsecamente sicuro a prova di esplosione "ia", 50 mm	3.0	-	Da -40°C a +65°C	-	IP67	II 1 G Ex ia IIC T6	514
7.0	488650.01	Componente elettrico intrinsecamente sicuro a prova di esplosione "ia", 50 mm	0.3 to 3.0	-	Da -40°C a +65°C	-	IP66	II 1 G Ex ia IIC T6	513
7.0	488670.01	Componente elettrico intrinsecamente sicuro a prova di esplosione "ia", 50 mm	0.3 to 3.0	-	Da -40°C a +65°C	-	IP65	II 1 G Ex ia IIC T6	515
7.0	490885	Componente elettrico intrinsecamente sicuro a prova di esplosione, "NEMA", 50 mm	3.0	-	Da -40°C a +60°C	-	NEMA 4 - 4X	Cl. I, Div.I, Gr. A, B, C, D	513
7.0	490890	Componente elettrico intrinsecamente sicuro a prova di esplosione, "NEMA", 50 mm	3.0	-	Da -40°C a +60°C	-	NEMA 4 - 4X	Cl. I, Div.I, Gr. A, B, C, D	514
8.0	495910	Componente elettrico intrinsecamente sicuro a prova di esplosione "ia", "booster", 37 mm	0.3 to 1.2.0	-	Da -40°C a +80°C	-	IP67	II 1 G Ex ia IIC T4/T5/T6	509
9.0	492210	Componente elettrico incapsulato a sicurezza aumentata e a prova di esplosione "eb", "booster", 50 mm	1.0 to 1.8	-	Da -40°C a +75°C	-	IP66	II 2 G Ex eb mb IIC T5/T6	506
9.0	496565	Componente elettrico intrinsecamente sicuro a prova di esplosione "ia", "booster", 37 mm	0.77 to 2.58	-	Da -40°C a +80°C	-	IP67	II 1 G Ex ia IIC T4/T5/T6	510
9.0	492965.01	Componente elettrico intrinsecamente sicuro a prova di esplosione "ia", "booster", 50 mm	0.3 to 2.3	-	Da -40°C a +65°C	-	IP66	II 1 G Ex ia IIC T6	511
10.1	496895	Bobina per collegamento con spina DIN per olio e gas, 37 mm	8.0	8.0	Da -40°C a +50°C	-	IP65	-	468
10.1	496560	Componente elettrico incapsulato antideflagrante "db mb", 37 mm	8.0	8.0	Da -40°C a +65°C	-	IP67	II 2 G Ex db mb IIC T4	501
10.1	496800	Componente elettrico incapsulato antideflagrante "db mb", 37 mm	8.0	8.0	Da -40°C a +65°C	-	IP67	II 2 G Ex db mb IIC T4	502
10.1	492310	Componente elettrico incapsulato a sicurezza aumentata e a prova di esplosione "eb", 50 mm	6.0	6.0	Da -40°C a +75°C	-	IP66	II 2 GD Ex eb mb II T4/T5	505
10.2	496555	Componente elettrico incapsulato antideflagrante "db mb", 37 mm	6.0	6.0	Da -40°C a +65°C	-	IP67	II 2 G Ex db mb IIC T4/T5/T6	501
10.2	496700	Componente elettrico incapsulato antideflagrante "db mb", 37 mm	6.0	6.0	Da -40°C a +65°C	-	IP67	II 2 G Ex db mb IIC T4/T5/T6	502
10.3	497105	Componente elettrico antideflagrante "d"	8.0	8.0	DA -50°C a +80°C		IP66	II 2 G Ex db IIC T4/T5/T6	493
11.0	483270	Componente elettrico antideflagrante "db", 50 mm	8.0	8.0	Da -40°C a +80°C	-	IP66	II 2 G Ex db IIC T4/T5/T6	492
12.0	482870.01	Componente elettrico intrinsecamente sicuro a prova di esplosione "ia", 50 mm	3.0	-	Da -40°C a +65°C	-	IP66	II 1 G Ex ia IIC T6	512
12.0	492335	Componente elettrico intrinsecamente sicuro a prova di esplosione, "NEMA", 50 mm	3.0	-	Da -40°C a +60°C	-	NEMA 4 - 4X	Cl. I, Div.I, Gr. A, B, C, D	512
13.0	495294	Bobina con connettore DIN ISO, 12 - 24 V CC, per applicazioni di trasporto, 32 mm	9.0	-	Da -40°C a +120°C	-	IP69K	-	481
13.0	496193	Bobina con connettore DIN ISO, 12 - 24 V CC, per applicazioni di trasporto, 32 mm	9.0	-	Da -40°C a +120°C	-	IP69K	-	481
14.1	483824	Bobina con morsetto a vite, temperatura e potenza elevate, 40 mm	19.0	19.0	Da -40°C a +50°C	-	IP 44 a 67	-	477
14.2	483764	Bobina per collegamento con spina DIN, 32 mm, UL	-	9.0	Da -40°C a +50°C	●	IP65	-	451
14.3	483541	Bobina con morsetto a vite, temperatura e potenza elevate, 40 mm	20.0	20.0	Da -40°C a +50°C	-	IP 44 a 67	-	478
20.0	ZB12	Bobina per collegamento con spina DIN	12.0	-	Da -10°C a +50°C	-	IP65	-	460
20.0	ZB09	Bobina per collegamento con spina DIN, UL per CA	-	9.0	Da -10°C a +50°C	●	IP65	-	460
20.1	YB12	Bobina con cavi volanti, IP67	12.0	-	Da -10°C a +50°C	-	IP67	-	469
20.1	YB09	Bobina con cavi volanti, IP67, UL per CA	-	9.0	Da -10°C a +50°C	●	IP67	-	469
20.2	ZB16	Bobina per collegamento con spina DIN, serie potenza e temperatura elevate	16.0	-	Da -10°C a +50°C	-	IP65	-	461
20.2	ZH16	Bobina per collegamento con spina DIN, serie potenza e temperatura elevate	16.0	-	Da -10°C a +80°C	-	IP65	-	461
20.2	ZB14	Bobina per collegamento con spina DIN, serie potenza e temperatura elevate	-	14.0	Da -10°C a +50°C	-	IP65	-	461
20.2	ZH14	Bobina per collegamento con spina DIN, serie potenza e temperatura elevate	-	14.0	Da -10°C a +80°C	-	IP65	-	461
21.0	JB14	Bobina per collegamento con spina DIN	16.0	-	Da -10°C a +50°C	-	IP65	-	462
21.0	JB16	Bobina per collegamento con spina DIN	-	14.0	Da -10°C a +50°C	-	IP65	-	462
22.0	KT10	Bobina per collegamento con spina DIN	10.0	-	Da -10°C a +50°C	-	IP65	-	463
22.0	KH09	Bobina per collegamento con spina DIN	-	9.0	Da -10°C a +80°C	-	IP65	-	463
22.0	KT09	Bobina per collegamento con spina DIN	-	9.0	Da -10°C a +50°C	-	IP65	-	463
23.0	XT09	Bobina per collegamento con spina DIN	-	9.0	Da -10°C a +50°C	-	IP54	-	464
24.0	D5	Bobina per collegamento con spina DIN, 32 mm	9.0	8.0	Da -40°C a +50°C	-	IP65	-	466
24.0	LA	Bobina con cavi volanti, IP67, 32 mm	9.0	9.0	Da -10°C a +50°C	-	IP67	-	470
24.0	D4	Bobina per collegamento con spina DIN, 32 mm, UL	16.0	13.0	Da -40°C a +50°C	●	IP65	-	465
24.0	LB-LC	Bobina con cavi volanti, IP67, 32 mm, UL	16.0	13.0-14.0	Da -10°C a +50°C	●	IP67	-	471
24.0	XS03	Bobina per collegamento con spina DIN, 32 mm	-	9.0	Da -40°C a +50°C	-	IP65	-	467

INDICE PER CODICE DI ORDINAZIONE

Codice di Ordinazione	Pagina
360451J	186
360452J	186
360469	90
360470	126
360475	126
360479J	226
360480J	226
360490J	226
360506	226
361810	46
361850	46
361910	46
361950	46
362262	134
362263	134
362264	136
362265	136
362290	38
362410J	220
362460J	220
362470J	220
362475J	220
362496J	126, 178
362510J	180
362518J	126, 180
362524J	126, 180
362530J	180
362560J	208
362570J	208
362620J	208
362630J	208
363282	38
363378	28, 80
363380	28, 30
363390	30, 80
363444	30, 82
363457	30, 82
363467	30, 82
363475	38

Codice di Ordinazione	Pagina
363570	38
364010	182
364035	182
364520	134
364530	136
364535	136
364880J	126
364884J	126
366501	54
366511	54
366521	54
366531	54
366601	68
366606	68
366611	68
366616	68
366770	54
366775	54
390005	178
390034	178
390085	178
390086	178
390088	178
390089	178
390120	178
390145	178
390150	178
390165	178
390195	178
390215	178
390216	178
390300	178
390405	178
390445	178
390457	178
390458	178
390465	178
390495	178
390505	178

Codice di Ordinazione	Pagina
390525	180
390560	180
390580	180
390605	180
390625	180
390626	180
390650	182
390668	180
390700	180
390705	182
390718	182
390720	182
390721	182
390725	180
390802	180
390803	180
390805	180
390813	180
390874	180
390875	180
390878	180
390895	180
390915	180
390945	180
390975	180
390995	180
390997	180
392169	82
392170	82
392173	82
392335	80
392349	80
392355	80
392366	80
392370	80
392372	80
392388	80
392389	80
392395	82

Codice di Ordinazione	Pagina
392396	82
392408	82
392409	82
397146J	90
398000	28
398001	28
398003	28
398006	30
398007	30
398008	30
398010	30
398012	30
398013	28
398014	28
398016	28
398017	28
398018	28
398022	28
398024	28
398026	28
398030	28
398034	28
398052	28
398100	208
398102	208
398104	208
398112	208
398114	208
398120	208
398122	208
398130U	208
398132	208
398134U	208
398136U	208
398138	208
398142	208
443776W	94
443777W	94
443778W	94

INDICE PER CODICE DI ORDINAZIONE

Codice di Ordinazione	Pagina
443779W	94
443780W	94
443781W	94
443782W	94
443783W	94
443784W	116
443785W	94
443786W	94
443787W	94
443788W	116
443789W	94
443790W	96
443791W	96
443792W	116
443793W	96
443794W	96
443795W	96

Codice di Ordinazione	Pagina
443796W	116
443797W	96
443798W	96
443799W	96
443800W	116
443801W	96
443802W	116
443803W	116
443804W	94
443805W	106
443806W	106
443807W	106
443808W	106
443809W	106
443810W	106
443811W	106
444492W	94

Codice di Ordinazione	Pagina
444494W	94
444497W	94
444499W	106
444500W	106
444501W	106
444502W	106
444503W	106
444513W	106
444576W	106
444600W	106
444601W	106
444602W	106
444603W	106
444604W	106
444605W	106

INDICE DELLE VALVOLE

	Codice valvola	Pagina
U	033X0111	330
U	033X5152	400
U	033X5156	400
U	033X51561D	400
U	033X5195	402
U	033X5256	404
U	033X52561D	404
U	033X7156	402
PM	120.4AR	186
PM	120.4IR	186
	121F2523	188
E	121F43	42,146
E	121F4302	42,92
	121F4317	42
E	121F44	42,146
E	121F4406	42,92
	121F4417	42
	121F47	42
	121F4706	42,146
	121F63	42,146
	121F64	42,146
	121F67	42,146
	121G2320	184
	121G2520	184
	121G2523	184
	121K01	34,84
	121K0103	128
	121K0106	34,84
	121K0113	128
	121K0150	34,84
	121K02	34,84
	121K0250	34,84
E	121K03	34,142,144
E	121K0302	34,84
	121K0323	128
E	121K0352	34,84
	121K0397	34
E	121K04	32,142
E	121K0402	32,84
	121K0497	32
E	121K07	32
	121K0706	32,84
	121K1302	32
E	121K14	32,142
E	121K23	32,142

	Codice valvola	Pagina
	121K2423	184
	121K3106	36,86,144
	121K3206	36,86,144
	121K3303	128
	121K3306	36,86,144
	121K3321	184
E	121K45	36,86
E	121K4503	128
E	121K46	36,86
E	121K4603	128
	121K6220	184
E	121K63	34,142
E	121K64	34,144
	121K6423	184
E	121K65	32,142
E	121K67	32,142
	121M13	32,84
	121M14	32,84
	121V5106	160
	121V5112	160
	121V5163	130,160
	121V5206	160
	121V5212	160
	121V5263	130,160
	121V5306	158
	121V5363	130,158
	121V5397	160
	121V5406	158
	121V5463	130,158
	121V5497	158
U	121V5595	170
U	121V5596	170
U	121V55961D	170
	121V5706	158
	121V5763	130,158
	122F44	44
	122K83	40
	122K8306	40,86
	122K8321	188
	122K8363	40,144
	122K84	40,144
	122K8406	40
	122K8408	40,144
	122K9321	188
	122K9363	40,144

	Codice valvola	Pagina
	122V8306	162
PM	123AV	46
PM	123CV	46
PM	123DV	46
PM	123IV	46
PM	125BV	90
PM	125CV.2	90
	125K01	40,88
	125K03	40
PM	126YH	126
PM	126YT	126
PM	128GR	226
PM	128IR	226
PM	128ISV	226
PM	128IV	226
	131.4BV	178
	131.4CG	180
	131.4FV	180
	131.4GG	180
	131.4GV	180,182
	131AN	178
	131B04	234
	131B14	234
E	131E03	216,306
E	131F26	238
E	131F43	230
E	131F4350	230
	131F4397	312
E	131F44	230
	131F4410	228
E	131F4450	230
	131F4490	228
	131F4497	228
	131F46	230
	131F4650	230
U	131F5295	384
	131F5406	236
U	131F5695	384
U	131F56951D	384
	131IN	178
	131INDIN	178
	131IV	178
E	131K03	216
E	131K0308	216,306
E	131K0350	216,306

	Codice valvola	Pagina
E	131K0358	210,302
	131K0397	210,214
E	131K04	212,304
E	131K0450	212,304
	131K0490	210,302
	131K0497	212,304
E	131K06	214,304
	131K0648	272
E	131K0650	214,304
E	131K13	210
E	131K14	210
	131K16	210
	131K1650	210
E	131K63	216
E	131K6350	216
E	131K64	212
E	131K6450	212
	131M14	210,302
	131M15	210,302
	131M74	228
	131M7450	228
	131M75	228
	131M7550	228
	131T21	216
	131T2101	306
	131T22	216
	131T23	212
	131T2301	212
	131T29	214
	131T2901	214
	131V5306	252
	131V5363	252
	131V5397	252
	131V5406	252
	131V5463	252
	131V5490	252
	131V5497	252
	131X1101	334
U	131X1101	334
	131X1131	334
U	131X1201	386
	132F43	230
	132F44	230
	132F46	230
	132K03	218

INDICE DELLE VALVOLE

	Codice valvola	Pagina
	132K04	218
	132K06	218
	132T22	218
	132T23	218
	132T2301	218
	132T29	308
E	133F43	232
E	133F44	232
E	133F4450	232
	133F46	232
	133F4650	312
E	133K03	222
E	133K0350	222
E	133K04	222
E	133K0450	222
	133K0497	222
E	133K05	222
E	133K06	222
E	133K0650	222
E	133K13	222
E	133K14	222
E	133K16	222
	133T21	222
	133T2101	224
	133T23	222
	133T2301	222
	133V5306	254
	133V5363	254
	133V5406	254
	133V5463	254
U	133V5595	376
U	133V55951D	376
U	133V5695	376
U	133V56951D	376
U	133V7595	376
U	133V7695	376
	133X01	314
U	133X01	314
	133X01001D	314
U	133X0111	308
U	133X01111D	308
U	133X0131	310
U	133X5152	378
U	133X5156	378
U	133X51561D	378

	Codice valvola	Pagina
U	133X5192	378
U	133X5195	384
U	133X51951D	386
U	133X5196	378
U	133X51961D	380
U	133X5296	382
U	133X52961D	382
U	133X7156	380
U	133X7195	386
U	133X7196	380
PM	135AT	134
PM	135CT	136
PM	135DT	136
PM	135IT	134
	135K03	310
	135K04	224
PM	136.2FV	38
PM	136YV	38
PM	139AV	220
PM	139FV	220
PM	139GV	220
PM	139LV	220
PM	140.4AR	180
PM	140.4DR	180
PM	140CR	126,180
PM	140DR	126,180
PM	140IR	126,178
PM	141AV	208
PM	141BV	208
PM	141FV	208
PM	141GV	208
PM	146.3ABV	30,82
PM	146.3KV	30,82
PM	146BV	28,80
PM	146FV	28,30,80
PM	146HV	30,80
PM	146WV	30,82
PM	146YV	30,82
PM	151GV	38
PM	151HV	38
PM	153BV	182
PM	153GV	182
PM	156.2AR	134
PM	156.2CR	136
PM	156.2DR	136

	Codice valvola	Pagina
PM	156.2IR	134
PM	158IH	126
PM	158IT	126
	161.4AV	80
	161.4BV	80
	161.4EV	82
PM	168.1AN	54
PM	168.1CN	54
PM	168.1DN	54
PM	168.1IN	54
PM	169.1AN	68
PM	169.1CN	68
PM	169.1DN	68
PM	169.1IN	68
PM	173AN	54
PM	173IN	54
	2019F1GRG7	202
	2019F1GVG7	202
	2019F1JRG7	202
	2019F1JVG7	202
	2019F1LRG7	202,204
	2019F1LVG7	204
	2019F1NRG7	204
	2019F1NVG7	204
	201LG1GVG2	166
	201LG1JVG2	166
	201LG1LVG2	166
	201LG2GVG2	166
	201LG2JVG2	166
	201LG2LVG2	166
	201LG2NVG7	166
	201LG2PVG7	166
	201LG3SVG7	168
	201LG3UVG7	168
	201LG4SVG7	168
	201LG4UVG7	168
	221G13	48
	221G1303	132
	221G1330	132
	221G15	48
	221G1503	132
	221G1530	48
	221G16	50
	221G1603	132
	221G1610	50

	Codice valvola	Pagina
	221G1630	50
	221G1631	50
	221G17	52
	221G1703	132
	221G1710	52
	221G1730	52
	221G1731	114
	221G21	52
	221G2103	114
	221G2106	52
	221G2110	52
	221G2130	52
	221G2131	114
	221G2136	52
	221G23	48
	221G2330	48
	221G25	48
	221G2523	190
	221G2530	48
	221G26	50
	221G2630	50
	221G27	52
	221G2730	52
	221J3301E	198
	221S10E	172
	221S10F	172
	221S15E	172
	221S15F	172
	221S20E	172
	221S20F	172
	221S25E	174
	221S25F	174
	3019F1GRG7	258
	3019F1GVG7	258
	3019F1JRG7	258,260
	3019F1JVG7	260
	3019F1LRG7	260
	3019F1LVG7	260
	3019F1NRG7	262
	3019F1NVG7	262
	301XGFRTG7	258
	301XGFRTJ7	260
	301XGFRTL7	260
	301XGFRTN7	262
	301XGFVTG7	258

INDICE DELLE VALVOLE

	Codice valvola	Pagina
	301XGFVTJ7	260
	301XGFVTL7	260,262
	301XGFVTN7	262
	321F2523	194
E	321F32	76,110
E	321F3202	76,154
	321F35	76
E	321G36	62,102
E	321G3606	62
E	321G3610	118
E	321G37	64,104
E	321G3706	64
E	321G3710	120
	321G3790	64
E	321G38	64,104
E	321G3806	64
E	321G3810	120
E	321G39	66,104
E	321G3906	66
E	321G3910	120
	321G3990	66
E	321G40	66,104
E	321G4006	66
E	321G4010	120
	321G4090	66
E	321H11	56,148
E	321H13	58,148
E	321H15	60,150
	321H1590	60
E	321H21	148,192
E	321H23	148,192
	321H2322	192
E	321H25	150,194
	321H2522	194
	321H2523	194
	321H35	60
	321H36	62
E	321K10	56,98
E	321K13	58,98
E	321K1314	58,98
E	321K15	60,100
E	321K1503	138
E	321K1514	60,100
	321K1523	268
	321K1535	266

	Codice valvola	Pagina
	321K1536	268
	321K1537	268
	321K1543	266
E	321K25	60,100
	321K31	56,98
	321K3106	56
	321K33	58,98
	321K3306	58
	321K35	60,100
	321K3506	60
	321K36	62,102
	321K3606	62
	321K37	64,104
	321K3706	64
	321K4106	98,118
	321K4156	56
	321K4306	98,118
	321K4356	58
	321K4506	100,118
	321K4556	100,118
	321K4606	102,118
	321K4656	102,118
	321K4706	104,120
	321K4756	104,120
E	321K63	148
	322F35	76
	322F72	76
	322F7206	76,154
	322G36	72,108
	322G3606	72
	322G3610	122
	322G37	72,110
	322G3706	72
	322G3710	122
	322G38	72
	322G3806	72
	322G3810	122
	322G39	72,110
	322G3906	72
	322G3910	122
	322G40	72
	322G4006	72
	322G4010	122
	322G75	70,108
	322G7506	70,152

	Codice valvola	Pagina
	322H35	70
	322H36	72
	322H71	70
	322H7106	70,152
	322H73	70,152
	322H7306	70,152
	322H75	70,152
	322H7506	70,152
	322K4106	108
	322K4306	108
	322K4506	108
	322K4606	108
	322K4706	110
	325K4106	74
	325K4306	74
	325K4506	74
	325K4606	74
	325K4706	74
E	331B01	240
	331B02	248
	331B0216	248
E	331B21	242
E	331B74	240
	331B7490	240
E	331L21	244
	331N03	336
	331N04	336
	331N0402	336
	331N34	338
	331N3402	338
E	332B01	242
	332B02	242
E	332B21	244
E	341B01	278
	341B02	276
E	341B21	278
	341B34	276
	341B3403	276
	341B3440	276
	341B3490	276
E	341F21	278
	341F34	284
	341F3403	284
	341F3440	284
E	341L01	294

	Codice valvola	Pagina
	341L0197	294
E	341L02	292
	341L04	294
	341L05	294
	341L11	290
E	341L1130	290
U	341L1130	290
E	341L21	286
	341L2190	286
	341L9101	282
	341L9201	286
	341L9504	362
	341L9534	362
	341L9594	364
	341L9597	364
	341L9598	364
	341N01	340
	341N02	346
U	341N0250	396
	341N03	350
	341N04	350
	341N05	344
	341N0502	346
	341N11	340
	341N12	348
	341N21	340
	341N2190	340
	341N22	348
	341N31	342
	341N3102	342
	341N3108	342
	341N3128	342
	341N3130	342
	341N3190	342
	341N3196	342
	341N3197	342
	341N32	348
	341N3202	348
U	341N3250	394
	341N3290	344
U	341N3292	394
U	341N3295	394
	341N3296	344
	341N3297	344
	341N34	350

INDICE DELLE VALVOLE

	Codice valvola	Pagina
	341N35	346
	341N3502	346
	341P01	316
	341P02	318
U	341P0250	388
	341P03	318
	341P04	322
	341P21	316
	341P2108	316
	341P2190	318
	341P2197	316
	341P22	320
	341P2290	320
	341P2297	320
U	341P3250	388
U	341P3292	390
	341P3295	390
	341P33	318
	341P34	322
	342N03	358
	342N11	358
	342N3197	358
	342N33	358
	343N03	360
	345B04	280
	345B24	280
	345B34	280
	345F34	284
	345L01	296
	345L21	288
	345N31	362
	345P21	328
	347L04	288
	347L11	292

	Codice valvola	Pagina
E	347L1130	292
	347L9101	282
	347L9201	288
	347N03	354
	347N04	356
	347N11	352
	347N12	354
	347N31	352
	347N3190	352
	347N3197	352
	347N32	354
U	347N3250	398
	347N33	354
	347N34	356
	347P01	324
	347P02	326
	347P03	326
	347P04	328
	347P21	324
	347P2190	324
	347P2197	324
	347P22	326
U	347P3250	392
U	347P3295	392
	347P33	326
	347P34	328
	421F35	76
U	441P3250	388
	531N03	366
	531N04	366
	541L01	298
	541N01	368
	541N0108	368
	541N03	370

	Codice valvola	Pagina
	541N04	370
	542N03	372
	547N03	370
	7321BAH00	94
	7321BAN00	94
	7321BAN01	94
	7321BAV00	94
	7321BCH00	94
	7321BCN00	94
	7321BCN01	94
	7321BCN02	116
	7321BCV00	94
	7321BDH00	94
	7321BDN00	94
	7321BDN01	94
	7321BDN02	116
	7321BDV00	94
	7321BEH00	96
	7321BEN00	96
	7321BEN01	96
	7321BEN02	116
	7321BFH00	96
	7321BFN00	96
	7321BFN01	96
	7321BFN02	116
	7321BGH00	96
	7321BGN00	96
	7321BGN01	96
	7321BGN02	116
	7321BIH00	94
	7321BIN00	94
	7321BIN01	94
	7321BIV00	94
	7321BLN02	116

	Codice valvola	Pagina
	7321BMN02	116
	7322BAH00	106
	7322BAN00	106
	7322BAV00	106
	7322BCH00	106
	7322BCN00	106
	7322BCV00	106
	7322BDH00	106
	7322BDN00	106
	7322BDV00	106
	7322BEH00	106
	7322BEN00	106
	7322BFH00	106
	7322BFN00	106
	7322BGH00	106
	7322BGN00	106
	7322BIH00	106
	7322BIN00	106
	7322BIV00	106
	7322BLN06	106
	7322BMN06	106
	N74.4AV	28
	N74.4AVA.5	28
	N74.4FV	28
	N74.4IV	28
	N74.4WV	30
	N79.4AV	208
	N79.4IV	208
	N79.6AV	208
	N79.6BV	208

AVVERTENZA - RESPONSABILITÀ DELL'UTENTE

EVENTUALI ANOMALIE, SCELTE INADEGUATE O USI IMPROPRI DEI PRODOTTI QUI DESCRITTI O DEGLI ARTICOLI CORRELATI POSSONO CAUSARE INFORTUNI, ANCHE MORTALI, E DANNI MATERIALI.

- Il presente documento e le altre informazioni divulgate da Parker Hannifin Corporation, dalle sue consociate e dai distributori autorizzati forniscono opzioni di prodotti o sistemi che devono essere ulteriormente analizzate da utenti con competenze tecniche.
- L'utente, attraverso processi di analisi e verifica, si assume la responsabilità assoluta per la scelta finale del sistema e dei componenti e per garantire che vengano soddisfatti tutti i requisiti dell'applicazione in merito a performance, resistenza, manutenzione, sicurezza e avvertenze. L'utente ha l'obbligo di analizzare tutti gli aspetti dell'applicazione, attenersi agli standard di settore applicabili e seguire le informazioni sul prodotto incluse nel catalogo dei prodotti corrente e in qualsiasi altro materiale fornito da Parker o dalle sue consociate o dai distributori autorizzati.
- Nella misura in cui Parker o le sue consociate o i distributori autorizzati forniscono opzioni di componenti o sistemi in base alle informazioni o alle specifiche indicate dall'utente, l'utente ha la responsabilità di verificare che tali informazioni e specifiche siano appropriate e sufficienti per tutte le applicazioni e gli usi ragionevolmente prevedibili dei componenti o dei sistemi.

Tecnologie Parker di Motion & Control

In Parker lavoriamo instancabilmente per aiutare i nostri clienti ad incrementare la produttività e ad ottenere una maggiore redditività, progettando i migliori sistemi per le loro esigenze. Per riuscire in questo nostro intento consideriamo le applicazioni da vari punti di vista e cerchiamo nuovi modi per creare valore. L'esperienza, la disponibilità di prodotti e la presenza capillare permettono a Parker di trovare sempre la soluzione giusta per qualsiasi tecnologia di movimentazione e controllo. Nessun'azienda conosce meglio di Parker queste tecnologie.

Per maggiori informazioni chiamare il numero 00800 27 27 5374

Settore aerospaziale

Mercati strategici	*Prodotti chiave*
Servizi aftermarket	Sistemi di comando e componenti di attuazione
Trasporti commerciali	Sistemi e componenti per motori
Motori	Sistemi e componenti di convogliamento dei fluidi
Aviazione civile e commerciale	Dispositivi di misurazione e atomizzazione dei fluidi
Elicotteri	Sistemi e componenti per carburanti
Veicoli di lancio	Sistemi di inertizzazione dei serbatoi di combustibile
Aerei militari	Sistemi e componenti idraulici
Missili	Gestione termica
Generazione di energia	Ruote e freni
Trasporti locali	
Veicoli aerei senza equipaggio	

Controllo della climatizzazione

Mercati strategici	*Prodotti chiave*
Agricoltura	Accumulatori
Condizionamento dell'aria	Attuatori avanzati
Macchine per l'edilizia	Controlli per CO2
Alimenti e bevande	Unità di controllo elettroniche
Macchinari industriali	Filtri disidratatori
Life science	Valvole di intercettazione manuali
Petrolio e gas	Scambiatori di calore
Raffreddamento di precisione	Tubi flessibili e raccordi
Processo	Valvole di regolazione della pressione
Refrigerazione	Distributori di refrigerante
Trasporti	Valvole di sicurezza
	Pompe intelligenti
	Elettrovalvole
	Valvole di espansione termostatiche

Idraulica

Mercati strategici	*Prodotti chiave*
Elevatori aerei	Accumulatori
Agricoltura	Valvole a cartuccia
Energie alternative	Attuatori elettroidraulici
Macchine per l'edilizia	Interfacce uomo-macchina
Settore forestale	Motori ibridi
Macchinari industriali	Cilindri idraulici
Macchine utensili	Pompe e motori idraulici
Settore navale	Sistemi idraulici
Movimentazione materiali	Valvole e comandi idraulici
Settore minerario	Sistemi per sterzi idraulici
Petrolio e gas	Circuiti idraulici integrati
Generazione di energia	Prese di forza
Veicoli per il trasporto dei rifiuti	Centraline idrauliche
Energie rinnovabili	Attuatori rotanti
Sistemi idraulici per autocarri	Sensori
Attrezzature per giardinaggio	

Pneumatica

Mercati strategici	*Prodotti chiave*
Settore aerospaziale	Trattamento dell'aria
Convogliatori e movimentazione di materiali	Raccordi e valvole in ottone
Automazione industriale	Manifold
Life science e medicale	Accessori pneumatici
Macchine utensili	Attuatori e pinze pneumatici
Macchinari per imballaggio	Valvole e controlli pneumatici
Trasporto e settore automobilistico	Disconnessioni rapide
	Attuatori rotanti
	Tubi flessibili e innesti in gomma e materiali termoplastici
	Estrusioni strutturali
	Tubi e raccordi in materiali termoplastici
	Generatori, ventose e sensori di vuoto

Settore elettromeccanico

Mercati strategici	Prodotti chiave
Settore aerospaziale	Azionamenti elettrici e sistemi AC/DC
Automazione industriale	Attuatori elettrici, robot portale e slitte
Life science e medicale	Sistemi di attuazione elettroidrostatica
Macchine utensili	Sistemi di attuazione elettromeccanica
Macchinari per imballaggio	Interfaccia uomo-macchina
Macchinari per l'industria della carta	Motori lineari
Macchinari e sistemi di lavorazione per l'industria delle materie plastiche	Motori a passo, servomotori, azionamenti e comandi
Metalli di prima fusione	Estrusioni strutturali
Semiconduttori e componenti elettronici	
Industria tessile	
Cavi e conduttori	

Filtrazione

Mercati strategici	Prodotti chiave
Settore aerospaziale	Generatori di gas per applicazioni analitiche
Alimenti e bevande	Filtri ed essiccatori per aria compressa
Attrezzature e impianti industriali	Sistemi di filtrazione per aria, liquidi di raffreddamento, carburante e olio motore
Life science	Sistemi di manutenzione preventiva per fluidi
Settore navale	Filtri idraulici e per lubrificazione
Attrezzature per il settore Mobile	Generatori di azoto, di idrogeno e di aria zero
Petrolio e gas	Filtri per strumentazione
Generazione di energia ed energie rinnovabili	Filtri a membrana e in tessuto
Processo	Microfiltrazione
Trasporti	Filtri per aria sterile
Depurazione dell'acqua	Filtri e sistemi di desalinizzazione e depurazione dell'acqua

Movimentazione di gas e fluidi

Mercati strategici	Prodotti chiave
Elevatori aerei	Valvole di non ritorno
Agricoltura	Connettori per convogliamento di fluidi a bassa pressione
Movimentazione di prodotti chimici sfusi	Tubi ombelicali per impiego sottomarino
Macchine per l'edilizia	Apparecchiature diagnostiche
Alimenti e bevande	Raccordi per tubi flessibili
Convogliamento di carburanti e gas	Tubi flessibili industriali
Macchinari industriali	Sistemi di ormeggio e cavi di alimentazione
Life science	Tubi flessibili e tubazioni in PTFE
Settore navale	Innesti rapidi
Settore minerario	Tubi flessibili in gomma e materiali termoplastici
Settore Mobile	Raccordi e adattatori per tubi
Petrolio e gas	Raccordi e tubi in plastica
Energie rinnovabili	
Trasporti	

Controllo di processo

Mercati strategici	Prodotti chiave
Carburanti alternativi	Strumenti analitici
Prodotti biofarmaceutici	Prodotti e sistemi per il condizionamento dei campioni analitici
Chimica e affinazione	Raccordi e valvole per il rilascio chimico
Alimenti e bevande	Raccordi, valvole e pompe per il rilascio chimico di fluoropolimeri
Settore navale e marittimo	Raccordi, valvole, regolatori e regolatori di portata digitali per l'erogazione di gas ad elevata purezza
Settore medicale e dentistico	Misuratori/regolatori industriali della portata
Microelettronica	Raccordi permanenti non saldati
Energia nucleare	Regolatori e regolatori di portata di precisione per uso industriale
Piattaforme off shore	Valvole a doppia intercettazione e sfiato per il controllo dei processi
Petrolio e gas	Raccordi, valvole, regolatori e valvole per manifold per il controllo del processo
Industria farmaceutica	
Generazione di energia	
Industria della carta	
Acciaio	
Acque/Acque reflue	

Tenuta e schermatura

Mercati strategici	Prodotti chiave
Settore aerospaziale	Guarnizioni dinamiche
Industria chimica	O-ring elastomerici
Materiali di consumo	Progettazione e assemblaggio di apparecchiature elettromedicali
Oleodinamica	Schermatura EMI
Settore industriale generico	Guarnizioni elastomeriche estruse e fabbricate con taglio di precisione
Informatica	Guarnizioni in metallo per alte temperature
Life science	Forme elastomeriche omogenee e inserite
Microelettronica	Produzione e assemblaggio di dispositivi medicali
Settore militare	Guarnizioni composite trattenute in metallo eplastica
Petrolio e gas	Finestre ottiche schermate
Generazione di energia	Tubazioni e prodotti estrusi in silicone
Energie rinnovabili	Gestione termica
Telecomunicazioni	Riduzione delle vibrazioni
Trasporti	

ENGINEERING **YOUR** SUCCESS.

Parker nel mondo

Europa, Medio Oriente, Africa

AE - Emirati Arabi Uniti, Dubai
Tel: +971 4 8127100
parker.me@parker.com

AT - Austria, Wiener Neustadt
Tel: +43 (0)2622 23501-0
parker.austria@parker.com

AT - Europa Orientale, Wiener Neustadt
Tel: +43 (0)2622 23501 900
parker.easteurope@parker.com

AZ - Azerbaijan, Baku
Tel: +994 50 2233 458
parker.azerbaijan@parker.com

BE/LU - Belgio, Nivelles
Tel: +32 (0)67 280 900
parker.belgium@parker.com

BG - Bulgaria, Sofia
Tel: +359 2 980 1344
parker.bulgaria@parker.com

BY - Bielorussia, Minsk
Tel: +375 17 209 9399
parker.belarus@parker.com

CH - Svizzera, Etoy
Tel: +41 (0)21 821 87 00
parker.switzerland@parker.com

CZ - Repubblica Ceca, Klecany
Tel: +420 284 083 111
parker.czechrepublic@parker.com

DE - Germania, Kaarst
Tel: +49 (0)2131 4016 0
parker.germany@parker.com

DK - Danimarca, Ballerup
Tel: +45 43 56 04 00
parker.denmark@parker.com

ES - Spagna, Madrid
Tel: +34 902 330 001
parker.spain@parker.com

FI - Finlandia, Vantaa
Tel: +358 (0)20 753 2500
parker.finland@parker.com

FR - Francia, Contamine s/Arve
Tel: +33 (0)4 50 25 80 25
parker.france@parker.com

GR - Grecia, Atene
Tel: +30 210 933 6450
parker.greece@parker.com

HU - Ungheria, Budaörs
Tel: +36 23 885 470
parker.hungary@parker.com

IE - Irlanda, Dublino
Tel: +353 (0)1 466 6370
parker.ireland@parker.com

IT - Italia, Corsico (MI)
Tel: +39 02 45 19 21
parker.italy@parker.com

KZ - Kazakhstan, Almaty
Tel: +7 7273 561 000
parker.easteurope@parker.com

NL - Paesi Bassi, Oldenzaal
Tel: +31 (0)541 585 000
parker.nl@parker.com

NO - Norvegia, Asker
Tel: +47 66 75 34 00
parker.norway@parker.com

PL - Polonia, Varsavia
Tel: +48 (0)22 573 24 00
parker.poland@parker.com

PT - Portogallo, Leca da Palmeira
Tel: +351 22 999 7360
parker.portugal@parker.com

RO - Romania, Bucarest
Tel: +40 21 252 1382
parker.romania@parker.com

RU - Russia, Mosca
Tel: +7 495 645-2156
parker.russia@parker.com

SE - Svezia, Spånga
Tel: +46 (0)8 59 79 50 00
parker.sweden@parker.com

SK - Slovacchia, Banská Bystrica
Tel: +421 484 162 252
parker.slovakia@parker.com

SL - Slovenia, Novo Mesto
Tel: +386 7 337 6650
parker.slovenia@parker.com

TR - Turchia, Istanbul
Tel: +90 216 4997081
parker.turkey@parker.com

UA - Ucraina, Kiev
Tel +380 44 494 2731
parker.ukraine@parker.com

UK - Gran Bretagna, Warwick
Tel: +44 (0)1926 317 878
parker.uk@parker.com

ZA - Repubblica del Sudafrica, Kempton Park
Tel: +27 (0)11 961 0700
parker.southafrica@parker.com

America del Nord

CA - Canada, Milton, Ontario
Tel: +1 905 693 3000

US - USA, Cleveland
Tel: +1 216 896 3000

Asia-Pacifico

AU - Australia, Castle Hill
Tel: +61 (0)2-9634 7777

CN - Cina, Shanghai
Tel: +86 21 2899 5000

HK - Hong Kong
Tel: +852 2428 8008

IN - India, Mumbai
Tel: +91 22 6513 7081-85

JP - Giappone, Tokyo
Tel: +81 (0)3 6408 3901

KR - Corea, Seoul
Tel: +82 2 559 0400

MY - Malaysia, Shah Alam
Tel: +60 3 7849 0800

NZ - Nuova Zelanda, Mt Wellington
Tel: +64 9 574 1744

SG - Singapore
Tel: +65 6887 6300

TH - Thailandia, Bangkok
Tel: +662 186 7000

TW - Taiwan, Taipei
Tel: +886 2 2298 8987

Sudamerica

AR - Argentina, Buenos Aires
Tel: +54 3327 44 4129

BR - Brasile, Sao Jose dos Campos
Tel: +55 800 727 5374

CL - Cile, Santiago
Tel: +56 2 623 1216

MX - Messico, Toluca
Tel: +52 72 2275 4200

Ed. 2015-02-02

© 2015 Parker Hannifin Corporation.
Tutti i diritti riservati.

Catalogo generale FCDE/0110/IT/V2.0 - 02/2015

Centro di informazione sui prodotti per EMEA
Numero verde: 00 800 27 27 5374
(da AT, BE, CH, CZ, DE, DK, EE, ES, FI, FR, IE, IL. IS, IT, LU, MT, NL, NO, PL, PT, RU, SE, SK, UK, ZA)

Centro di informazione sui prodotti per gli USA
Numero verde: 1-800-27 27 537
www.parker.com

Parker

Ermeto Original
Valvole

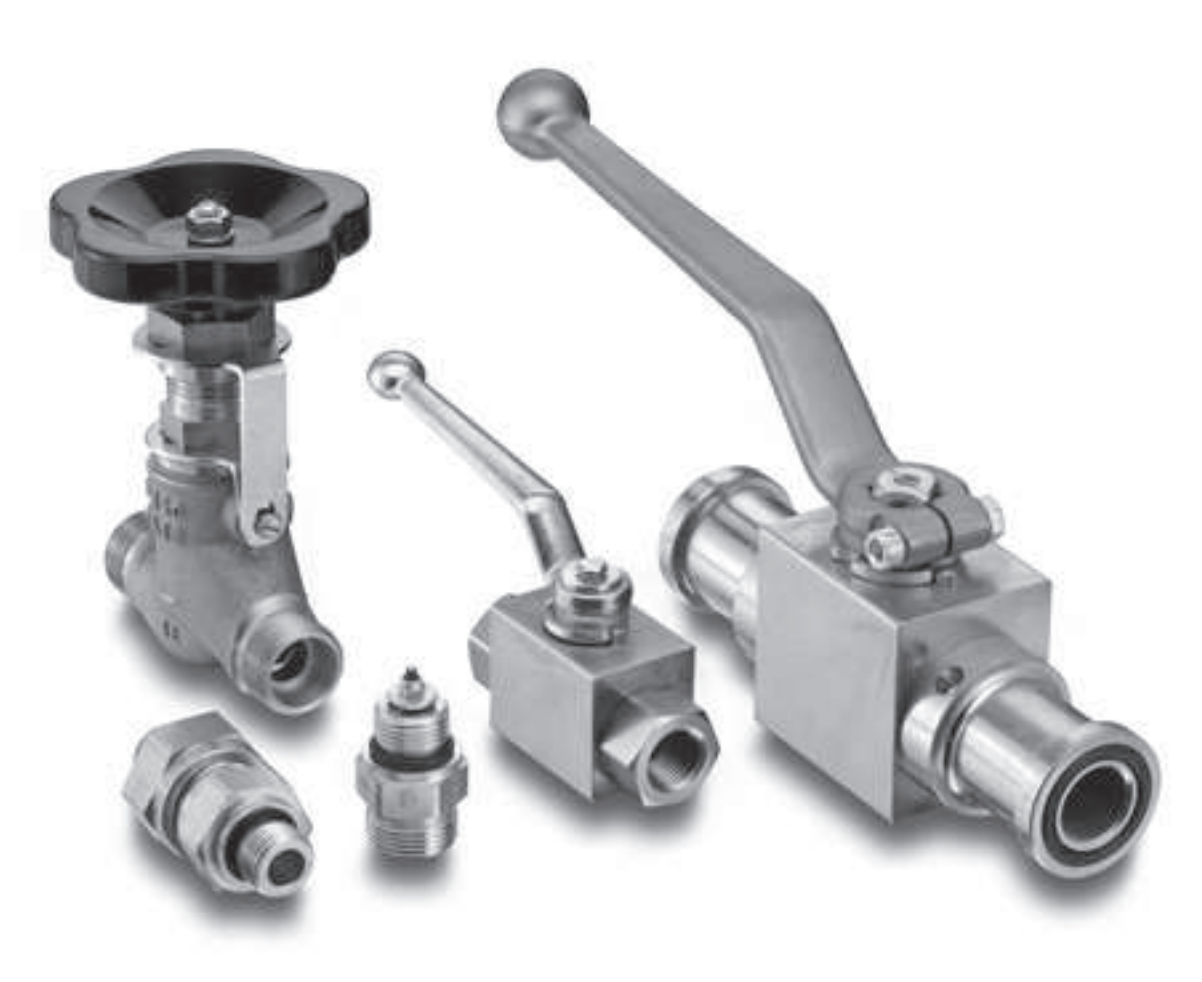

Indice visivo – Valvole di non ritorno

RHD / p. O13

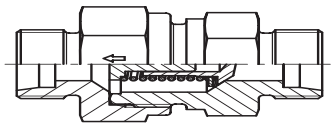

Estremità conica EO 24° / Estremità conica EO 24°

RHV-R-ED / p. O14

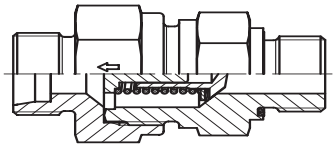

Estremità conica EO 24° /
Filettatura maschio BSPP – Guarnizione ED (ISO 1179)

RHZ-R-ED / p. O15

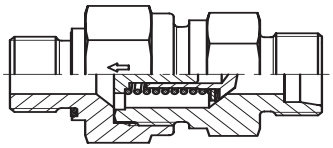

Filettatura maschio BSPP – Guarnizione ED (ISO 1179) /
Estremità conica EO 24°

RHV-M-ED / p. O16

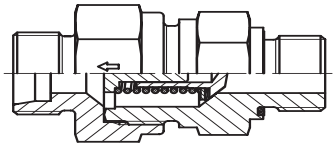

Estremità conica EO 24° /
Filettatura maschio metrica – Guarnizione ED (ISO 9974)

RHZ-M-ED / p. O17

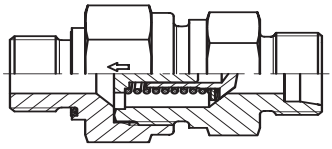

Filettatura maschio metrica – Guarnizione ED (ISO 9974) /
Estremità conica EO 24°

RHDI / p. O18

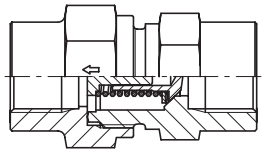

Filettatura femmina BSPP (ISO 1179-1) /
Filettatura femmina BSPP (ISO 1179-1)

RVP / p. O19

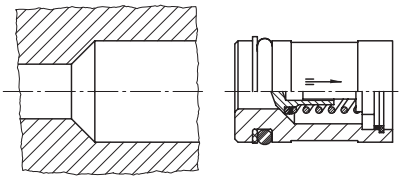

Cartuccia valvola di non ritorno

I-TL / p. O20

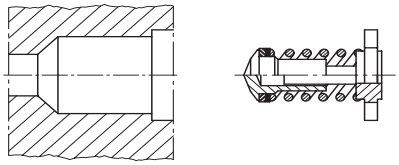

Parti interne valvola di non ritorno

Indice visivo – Valvole di non ritorno con connessioni O-Lok®

RHDMLOS / p. O22 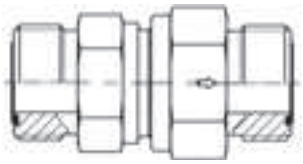 Estremità ORFS O-Lok® / Estremità ORFS O-Lok®	
RHV42EDMLOS / p. O23 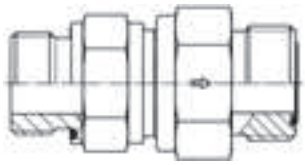 Filettatura maschio BSPP – Guarnizione ED (ISO 1179) / Estremità ORFS O-Lok®	**RHZ42EDMLOS** / p. O24 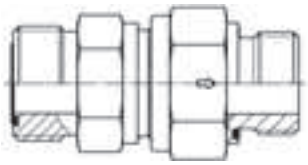 Estremità ORFS O-Lok® / Filettatura maschio BSPP – Guarnizione ED (ISO 1179)
RHV5OMLOS / p. O25 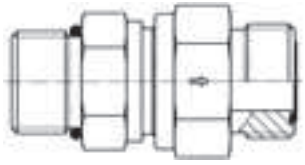 Filettatura maschio UN/UNF – O-ring (ISO 11926) / Estremità ORFS O-Lok®	**RHZ5OMLOS** / p. O26 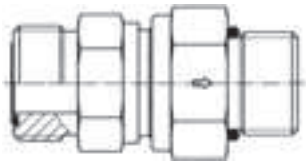 Estremità ORFS O-Lok® / Filettatura maschio UN/UNF – O-ring (ISO 11926)
RHV82EDMLOS / p. O27 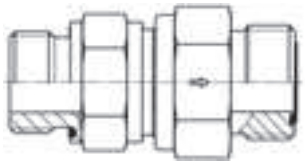 Filettatura maschio metrica – Guarnizione ED (ISO 9974) / Estremità ORFS O-Lok®	**RHZ82EDMLOS** / p. O28 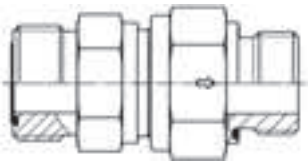 Estremità ORFS O-Lok® / Filettatura maschio metrica – Guarnizione ED (ISO 9974)

Indice visivo – Valvole di non ritorno con connessioni Triple-Lok®

RHDMTXS / p. O29 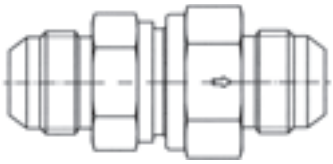 Estremità svasata a 37° Triple-Lok® / Estremità svasata a 37° Triple-Lok®	
RHV42EDMXS / p. O30 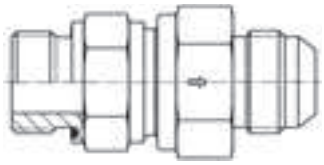 Filettatura maschio BSPP – Guarnizione ED (ISO 1179) / Estremità svasata a 37° Triple-Lok®	**RHZ42EDMXS** / p. O31 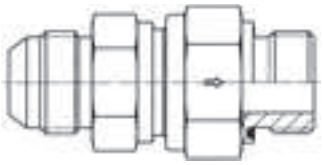 Estremità svasata a 37° Triple-Lok® Filettatura maschio BSPP – Guarnizione ED (ISO 1179)
RHV5OMXS / p. O32 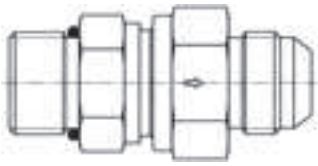 Filettatura maschio UN/UNF – O-ring (ISO 11926) / Estremità svasata a 37° Triple-Lok®	**RHZ5OMXS** / p. O33 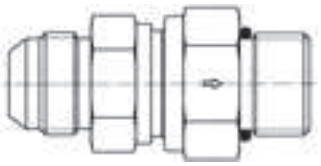 Estremità svasata a 37° Triple-Lok® / Filettatura maschio UN/UNF – O-ring (ISO 11926)
RHV82EDMXS / p. O34 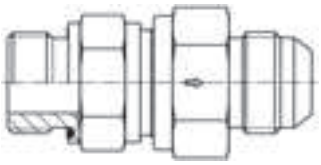 Filettatura maschio metrica – Guarnizione ED (ISO 9974) / Estremità svasata a 37° Triple-Lok®	**RHZ82EDMXS** / p. O35 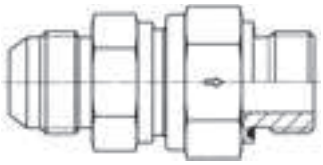 Estremità svasata a 37° Triple-Lok® / Filettatura maschio metrica – Guarnizione ED (ISO 9974)

Indice visivo – valvole a sfera a 2 vie Serie KH

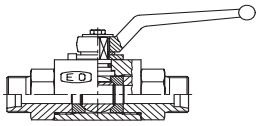

KH (S)
p. O36

Estremità conica EO 24° / Estremità conica EO 24°

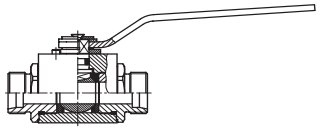

KH (71)
p. O37

Estremità conica EO 24° / Estremità conica EO 24°

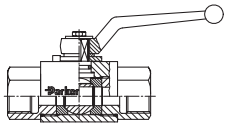

KH-BSPP (S)
p. O38

Filettatura femmina (ISO 1179-1) /
Filettatura femmina (ISO 1179-1)

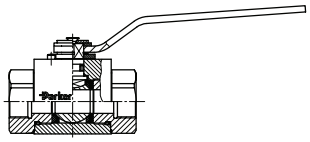

KH-BSPP (71)
p. O39

Filettatura femmina (ISO 1179-1) /
Filettatura femmina (ISO 1179-1)

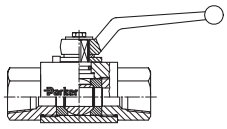

KH-NPT (S)
p. O40

Filettatura femmina (SAE 476) /
Filettatura femmina (SAE 476)

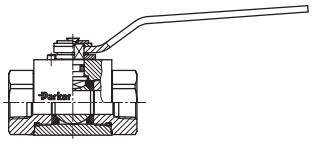

KH-NPT (71)
p. O41

Filettatura femmina (SAE 476) /
Filettatura femmina (SAE 476)

Indice visivo – valvole a sfera a 3 vie

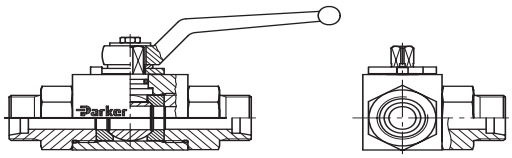

KH 3/2 (S)
p. O42

Estremità conica EO 24° / Estremità conica EO 24° / Estremità conica EO 24°

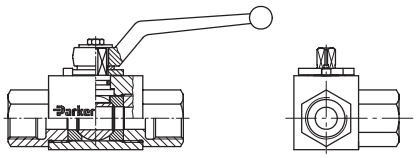

KH 3/2-BSPP(S)
p. O43

Filettatura femmina (ISO 1179-1) / Filettatura femmina (ISO 1179-1) / Filettatura femmina (ISO 1179-1)

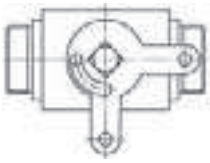

KH
p. O44

Dispositivo di bloccaggio per valvole a sfera a 2/2 vie e Multivie

O

Indice visivo – Valvola a sfera con connessione a flangia SAE

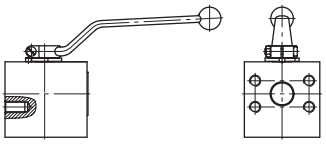

KH-B1V-S
p. O45

Valvola a sfera con connessione a flangia SAE

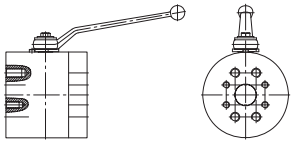

KH-B2V-S
p. O46

Valvola a sfera con connessione a flangia SAE

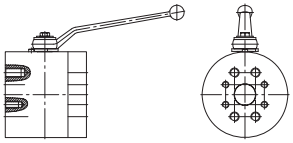

KH-B3V-S
p. O47

Valvola a sfera con connessione a flangia SAE

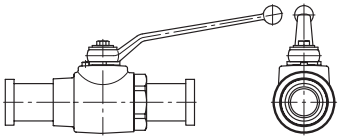

KH-A-S
p. O48

Valvola a sfera con connessione a flangia SAE

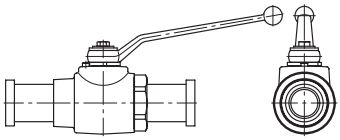

KH-A-S-71
p. O49

Valvole a sfera con connessione a flangia SAE

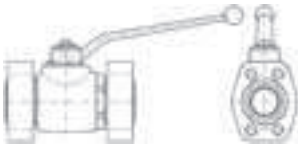

KH-B4V-S
p. O50

Valvole a sfera con connessione a flangia ISO 6162 (1/2)

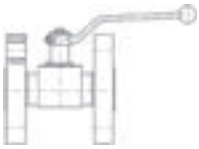

KHB5V-S
p. O51

Valvola a sfera con connessione a flangia DIN EN 1092-1

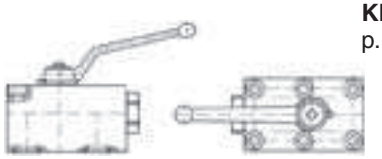

KHBLOCK
p. O52

Valvole a sfera a 2 vie con struttura a blocco

Indice visivo – Intercettazione e valvole di sicurezza LRV contro eventuali rotture dei tubi

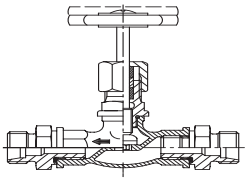 **DV** p. O53 Estremità conica EO 24° / Estremità conica EO 24°	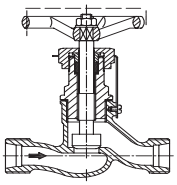 **LD** p. O54 Estremità conica EO 24° / Estremità conica EO 24°
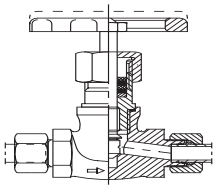 **VDHA** S. O55 Estremità EO / Estremità EO	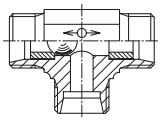 **WV** p. O56 Estremità conica EO 24° / Estremità conica EO 24° / Estremità conica EO 24°
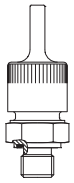 **ELA/ELAE** p. O57/O58 Valvole di sfiato	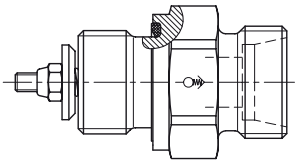 **LRV 08 … 22L** p. O59 Estremità conica EO 24°

Gamma valvole di non ritorno, valvole aperte/chiuse e valvole di intercettazione ad azionamento manuale

Valvole di non ritorno per pressione nominale fino a PN 420 bar:

- con connessione del tubo entrambe le estremità: RHD
- con connessione del tubo al terminale maschio: RHV/RHZ
- con filettatura femmina a entrambe le estremità: RHDI
- cartucce valvole: RVP
- parti interne valvole: I-TL
- test idraulico velocità di perdita alla pressione di test: 1 goccia al minuto

Valvole aperte/chiuse:

- per pressione nominale fino a PN 160 WV
- test idraulico percentuale di perdita alla pressione di test: 20 gocce al minuto

Valvole di intercettazione

- per pressioni di esercizio elevate fino a PN 630 bar VDHA

Caratteristiche:

1. Per quanto riguarda materiali, pressioni di esercizio consentite, temperature, coppie di flusso medie per terminali maschi, ecc. vedere le relative pagine del catalogo.
2. Le estremità di connessione del tubo devono essere assemblate in conformità alle istruzioni di montaggio EO/EO-2 di Parker.
3. I corpi valvola devono essere tenuti in posizione durante la fase di montaggio delle estremità dei tubi.
4. Pressioni di test per valvole di non ritorno:
   PN in conformità con il diametro esterno. Per informazioni vedere Capitolo C.
5. Valori di caduta di pressione: vedere p. C12 e grafici.

Attenzione!

Verificare le pressioni nominali consentite per le estremità dei tubi EO.

Gamma valvole a sfera a un quarto di giro

Valvole a sfera ad azionamento manuale a un quarto di giro

- per pressioni di esercizio elevate fino a PN 400 bar KH
- test idraulico percentuale di perdita alla pressione di test: 0 gocce al minuto

La specifica di pressione PN per le valvole di intercettazione ad azionamento manuale e per le valvole a sfera a un quarto di giro è applicabile al fattore di sicurezza 1,5 (in conformità a DIN 3230 T5 e ISO 5208).

Acciaio

Materiale:
Corpo in acciaio, rivestimento DIN 50938-FE//A/T4, sfera in acciaio al carbonio cromato duro, stelo in acciaio zincato.

Guarnizioni:
Sede della sfera in POM (es. Delrin), guarnizione stelo in NBR (es. Perbunan).

Applicazioni:
Adatto a fluido idraulico a base di petrolio, lubrificanti e olio combustibile.
Adatto per applicazioni fino a 500 bar.

Intervallo di temperatura:
da –10 fino a +100 °C.

Acciaio inossidabile

Materiale:
Corpo in acciaio inossidabile, sfera in acciaio inossidabile, stelo e connettori in acciaio inossidabile.

Guarnizioni:
Sede della sfera in POM (es. Delrin), guarnizione stelo in NBR (es. Perbunan), DOZ per dado a duplice funzione in FKM (es. FKM).

Applicazioni:
Adatto a fluido idraulico a base di petrolio, lubrificanti e olio combustibile.
Adatto per applicazioni fino a 500 bar.

Intervallo di temperatura:
da –30 fino a +100 °C.

Perbunan = sono marchi registrati di Bayer

Note:

Per verificare l'idoneità delle valvole a una particolare applicazione, vi preghiamo di comunicarci le specifiche esatte relative al fluido da utilizzare, alla pressione di esercizio massima (inclusi i picchi di pressione), temperatura e frequenza di funzionamento della valvola. Se si utilizza acqua, indicarne il tipo o gli eventuali additivi.

RHD/V/Z Valvola di non ritorno

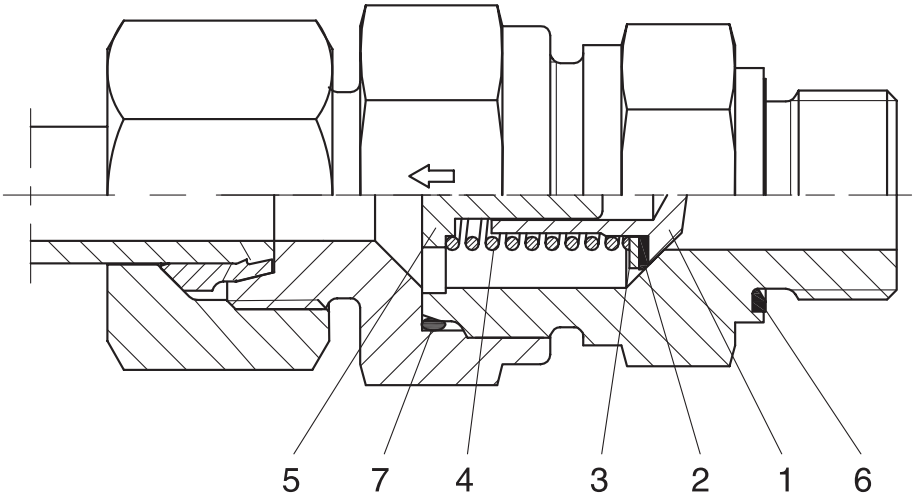

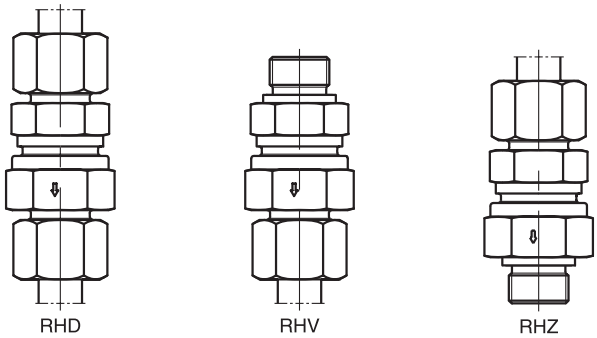

1: cono otturatore
2: guarnizione di tenuta
3: disco di appoggio
4: molla
5: disco di passaggio
6: guarnizione Eolastic
7: O-ring

DN = Diametro nominale (mm)

Caratteristiche:

Valvola di non ritorno con otturatore, con sede 90° e guarnizione di tenuta elastomerica. Arresto dell'otturatore per un'apertura controllata delle valvole. Apertura dotata di ammortizzatore per ridurre al minimo rumore e contraccolpi. Nessuna riduzione di sezione. La velocità massima del flusso non supera 8 m/sec (per velocità di flusso superiori sono necessari test speciali). Tenuta della filettatura del terminale maschio tramite guarnizione in gomma Eolastic con i tipi RHV e RHZ.

Pressione di apertura:

Standard 1 bar (su richiesta sono disponibili anche 0,2; 0,5; 2; 3; 4; 5 e 6 bar; si prega di specificare al momento dell'ordinazione). Per la pressione di esercizio vedere le tabelle appropriate. Tolleranza della pressione di apertura: ± 20 %.

Materiale:

- Acciaio zincato CF (senza CR[VI]), guarnizioni in NBR (es. Perbunan*) o FKM su richiesta.

Perbunan = sono marchi registrati di Bayer

- Valvole in acciaio inossidabile in FKM standard. (pressione di apertura fino a 3 bar)
- Valvole in ottone (CuZn35Ni2 2.0540) con parti interne (1.4571) disponibili su richiesta. (pressione di apertura fino a 3 bar)

Montaggio:

Vedere le istruzioni di montaggio per le connessioni EO/EO-2. Le valvole di non ritorno sono dotate di rivestimento per prevenire eventuale contaminazione.

Fluidi:

Olio idraulico, fluidi idraulici non facilmente infiammabili (tranne per tipi HFC; per tipi HFD sono necessarie guarnizioni FKM). Si prega di indicare al momento dell'ordinazione se è previsto l'utilizzo con aria compressa. Non adatto per vapore, gas combustibili/esplosivi o ossigeno.
Per applicazioni con acqua, consultare Parker fornendo i dettagli relativi all'acqua e ad eventuali additivi.

In tutti i grafici il valore più alto della portata in l/min è relativo alla velocità massima di flusso consentita di 8 m/sec.

Caduta di pressione diam. est. tubo 06L/06+08S; dimensione 4; filettatura femmina BSPP 1/8; 1/4; RVP 13; DN 3.5

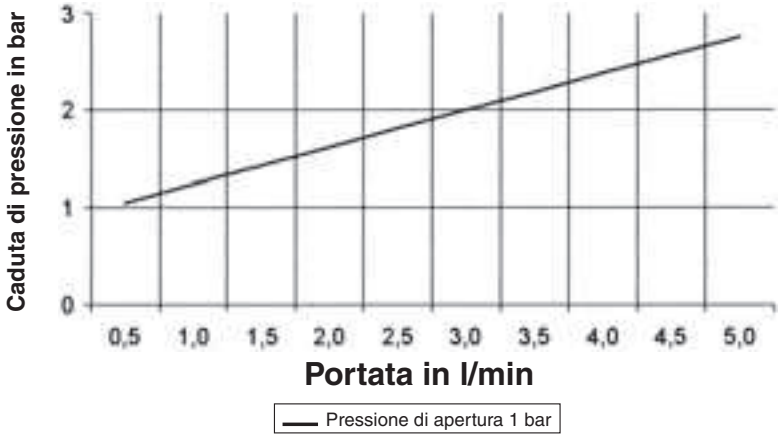

Caduta di pressione diam. est. tubo 8L/10S; dimensione 5; RVP 16; DN 5,5

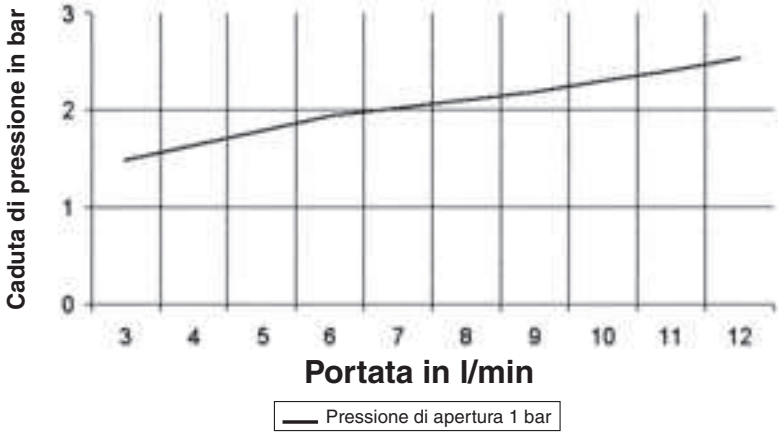

Caduta di pressione diam. est. tubo 10L/12S; dimensione 6; filettatura femmina BSPP 3/8; RVP 20; DN 7.5

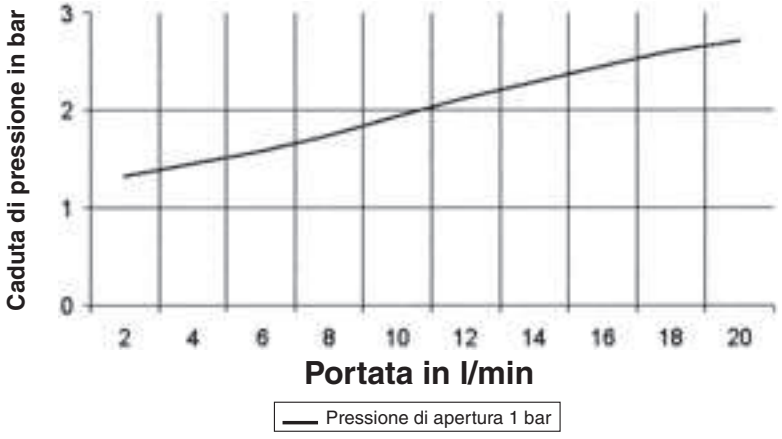

In tutti i grafici il valore più alto della portata in l/min è relativo alla velocità massima di flusso consentita di 8 m/sec.

Caduta di pressione diam. est. tubo 12L/14S; dimensione 8; RVP 24; DN 9,5

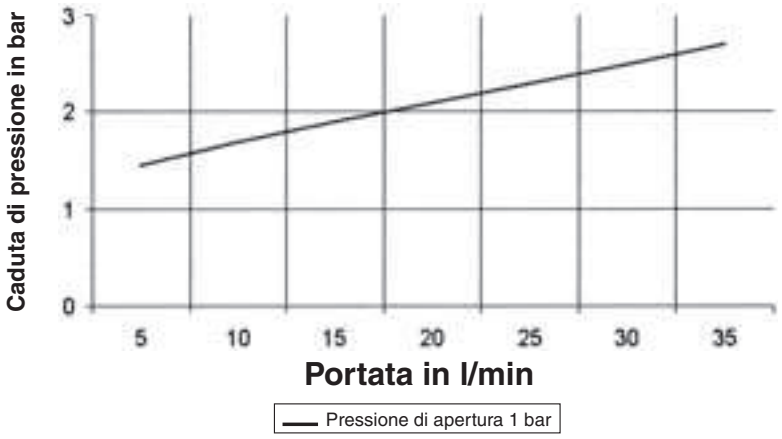

Caduta di pressione diam. est. tubo 15L/16S; dimensione 10; filettatura femmina BSPP 1/2; RVP 27; DN 11.5

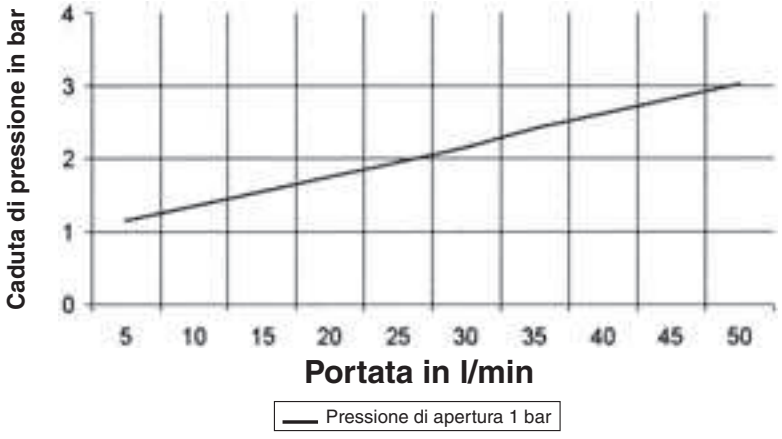

Caduta di pressione diam. est. tubo 18L/20S; dimensione 12; filettatura femmina BSPP 3/4; RVP 35; DN 15.0

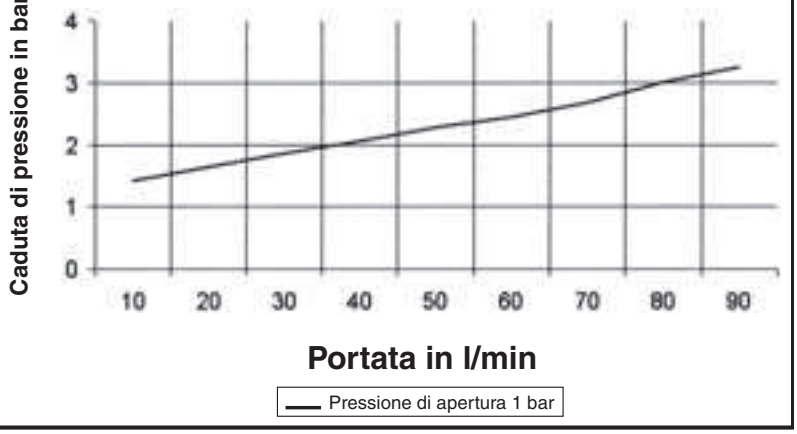

O

In tutti i grafici il valore più alto della portata in l/min è relativo alla velocità massima di flusso consentita di 8 m/sec.

Caduta di pressione diam. est. tubo 22L/25S; dimensione 16; filettatura femmina BSPP 1; RVP 40; DN 19

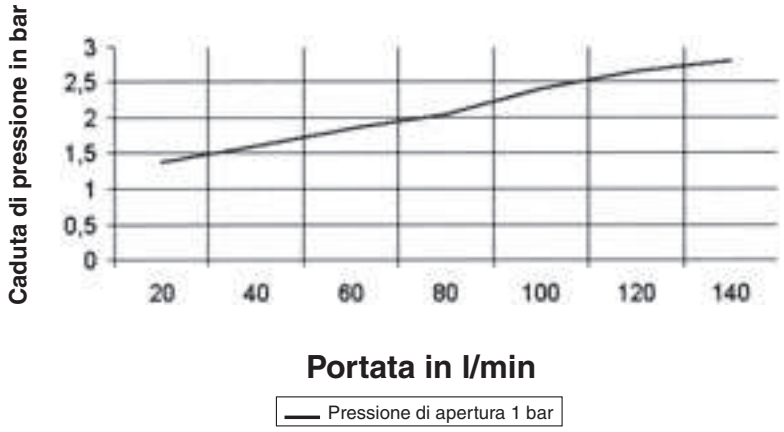

Caduta di pressione diam. est. tubo 28L/30S; dimensione 20; filettatura femmina BSPP 1 1/4; RVP 47; DN 24

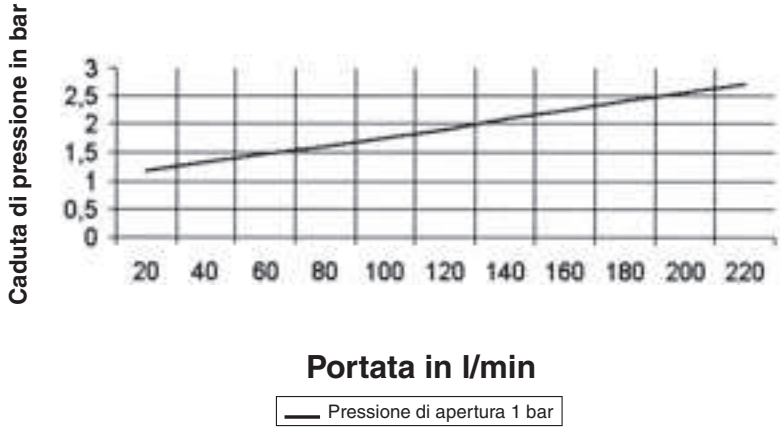

Caduta di pressione diam. est. tubo 35+42L/38S; dimensione 24; filettatura femmina BSPP 1 1/2; RVP 55; DN 29

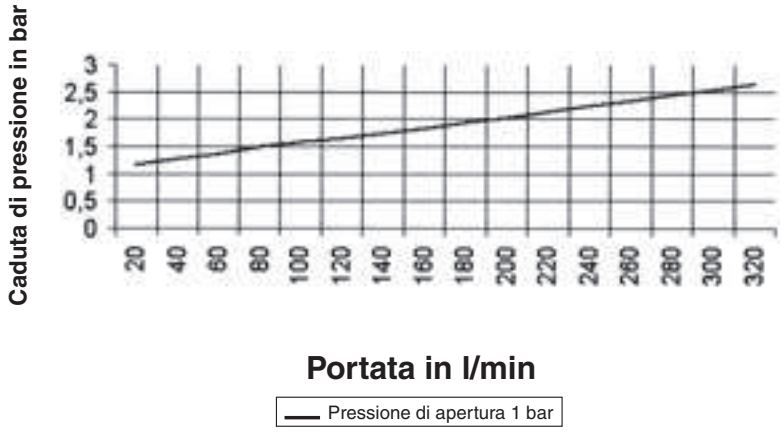

RHD Valvola di non ritorno

Estremità conica EO 24° / Estremità conica EO 24°

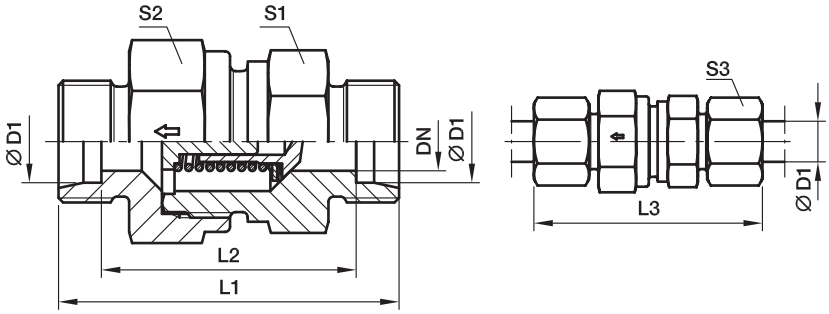

Serie	D1	CF DN	71 DN	CF L1	71 L1	L2	L3	S1	CF S2	71 S2	S3	Peso g/1 pezzo	Codice di ordinazione*	PN (bar)[1] CF	PN (bar)[1] 71
L[3])	06	3,5	3,5	43,0	43,0	29,0	58,0	17	17	17	14	46	**RHD06LOMD**	400	250
	08	5,5	5,5	44,0	44,9	30,0	59,0	19	19	19	17	61	**RHD08LOMD**	400	250
	10	7,5	7,5	55,0	54,5	40,5	69,5	22	24	24	19	104	**RHD10LOMD**	400	250
	12	9,5	9,5	58,0	57,5	43,5	72,5	27	30	30	22	166	**RHD12LOMD**	400	250
	15	11,0	11,5	62,0	61,5	47,5	77,5	27	32	32	27	192	**RHD15LOMD**	400	250
	18	14,0	14,0	67,0	66,5	51,5	83,5	36	41	36	32	292	**RHD18LOMD**	400	160
	22	18,0	18,0	77,0	76,5	61,5	93,5	41	46	46	36	472	**RHD22LOMD**	250	160
	28	23,0	23,0	85,0	84,5	69,5	102,5	50	55	55	41	746	**RHD28LOMD**	250	100
	35	29,0	29,0	96,0	95,5	74,5	117,5	60	65	60	50	1062	**RHD35LOMD**	250	100
	42	29,0	29,0	96,0	96,0	74,0	119,0	65	70	70	60	1518	**RHD42LOMD**	250	100
S[4])	06	3,5	3,5	48,5	48,5	34,5	63,5	19	19	19	17	70	**RHD06SOMD**	420	400
	08	3,5	3,5	48,5	48,5	34,5	63,5	19	19	19	19	74	**RHD08SOMD**	420	400
	10	5,5	5,5	55,5	55,5	40,5	72,5	22	24	24	22	121	**RHD10SOMD**	420	400
	12	7,5	7,5	57,5	57,5	42,5	74,5	24	27	27	24	148	**RHD12SOMD**	420	400
	14	9,5	9,5	64,0	63,5	47,5	82,5	27	32	32	27	218	**RHD14SOMD**	420	315
	16	11,0	11,5	68,0	67,5	50,5	86,5	32	36	36	30	286	**RHD16SOMD**	420	315
	20	15,0	15,0	76,0	75,5	54,5	97,5	41	50	46	36	506	**RHD20SOMD**	420	250
	25	19,0	19,0	83,0	82,5	58,5	106,5	46	55	50	46	639	**RHD25SOMD**	420	250
	30	24,0	24,0	97,0	96,5	69,5	122,5	60	60	60	50	1157	**RHD30SOMD**	250	250
	38	29,0	29,0	108,0	107,5	75,5	136,5	65	70	70	60	1650	**RHD38SOMD**	250	250

[1]) Pressione indicata = Articolo disponibile

[3]) L = Serie leggera; [4]) S = Serie pesante

$$\frac{\text{PN (bar)}}{10} = \text{PN (MPa)}$$

Consegna senza dado né anello. Per informazioni sull'ordinazione di raccordi completi o sui materiali di tenuta alternativi vedere pag. I7.

*Aggiungere i **suffissi** qui di seguito in base al materiale e alla superficie richiesti.

Suffissi codice di ordinazione			
Materiale	Suffisso superficie e materiale	Esempio	Materiale di tenuta (non occorre suffisso aggiuntivo)
Acciaio, zincato, esente da CromoVI	CF	RHD06LOMDCF	NBR
Acciaio, inossidabile	71	RHD06LOMD71	VIT

RHV-R-ED Valvola di non ritorno

Estremità conica EO 24° / Filettatura maschio BSPP – Guarnizione ED (ISO 1179)

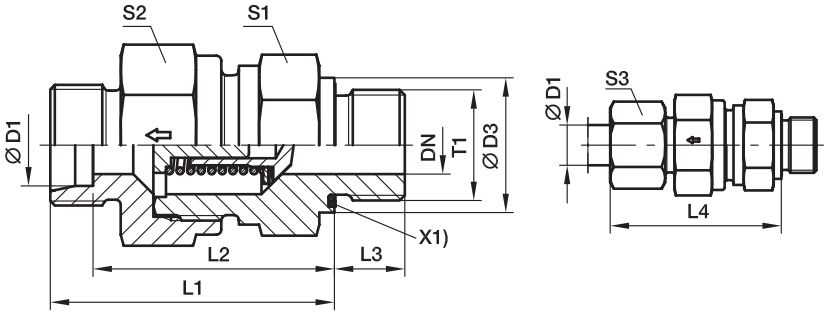

X1) Guarnizione Eolastic

Serie	D1	T1	CF DN	71 DN	D3	CF L1	71 L1	L2	L3	L4	S1	CF S2	71 S2	S3	Peso g/1 pezzo	Codice di ordinazione*	PN (bar)[1] CF	PN (bar)[1] 71
L[3])	06	G 1/8 A	3,5	3,5	14	35,0	35,0	28,0	8	42,5	17	17	17	14	47	**RHV06LREDOMD**	400	250
	08	G 1/4 A	5,5	5,5	19	37,0	37,0	30,0	12	44,5	19	19	19	17	62	**RHV08LREDOMD**	400	250
	10	G 1/4 A	7,5	7,5	19	46,0	45,5	38,5	12	53,0	22	24	24	19	105	**RHV10LREDOMD**	400	250
	12	G 3/8 A	9,5	9,5	22	50,0	49,5	42,5	12	57,0	27	30	30	22	175	**RHV12LREDOMD**	400	250
	15	G 1/2 A	11,0	11,5	27	53,0	52,5	45,5	14	60,5	27	32	32	27	205	**RHV15LREDOMD**	400	250
	18	G 1/2 A	14,0	14,0	27	58,0	57,5	50,0	14	66,0	36	41	36	32	294	**RHV18LREDOMD**	400	160
	22	G 3/4 A	18,0	18,0	32	63,0	62,5	55,0	16	71,0	41	46	46	36	450	**RHV22LREDOMD**	250	160
	28	G 1 A	23,0	23,0	40	71,0	70,5	63,0	18	79,5	50	55	55	41	720	**RHV28LREDOMD**	250	100
	35	G 1 1/4 A	29,0	29,0	50	80,0	79,5	69,0	20	90,5	60	65	60	50	1050	**RHV35LREDOMD**	250	100
	42	G 1 1/2 A	29,0	29,0	55	80,0	79,5	68,5	22	91,0	65	70	70	60	1560	**RHV42LREDOMD**	250	100
S[4])	06	G 1/4 A	3,5	3,5	19	38,5	38,5	31,5	12	46,0	19	19	19	17	73	**RHV06SREDOMD**	420	400
	08	G 1/4 A	3,5	3,5	19	38,5	38,5	31,5	12	46,0	19	19	19	19	79	**RHV08SREDOMD**	420	400
	10	G 3/8 A	5,5	5,5	22	45,5	45,5	38,0	12	54,0	22	24	24	22	132	**RHV10SREDOMD**	420	400
	12	G 3/8 A	7,5	7,5	22	48,5	48,5	41,0	12	57,0	24	27	27	24	153	**RHV12SREDOMD**	420	400
	14	G 1/2 A	9,5	9,5	27	53,0	52,5	44,5	14	62,0	27	32	32	27	230	**RHV14SREDOMD**	420	315
	16	G 1/2 A	11,0	11,5	27	57,0	56,5	48,0	14	66,0	32	36	36	30	293	**RHV16SREDOMD**	420	315
	20	G 3/4 A	15,0	15,0	32	63,0	62,5	52,0	16	73,5	41	50	46	36	511	**RHV20SREDOMD**	420	250
	25	G 1 A	19,0	19,0	40	67,0	66,5	54,5	18	78,5	46	55	50	46	648	**RHV25SREDOMD**	420	250
	30	G 1 1/4 A	24,0	24,0	50	78,0	77,5	64,0	20	90,5	60	60	60	50	1176	**RHV30SREDOMD**	250	250
	38	G 1 1/2 A	29,0	29,0	55	86,0	85,5	69,5	22	100,0	65	70	70	60	1624	**RHV38SREDOMD**	250	250

[1]) Pressione indicata = Articolo disponibile

[3]) L = Serie leggera; [4]) S = Serie pesante

$$\frac{\text{PN (bar)}}{10} = \text{PN (MPa)}$$

Consegna senza dado né anello. Per informazioni sull'ordinazione di raccordi completi o sui materiali di tenuta alternativi vedere pag. I7.

*Aggiungere i **suffissi** qui di seguito in base al materiale e alla superficie richiesti.

Suffissi codice di ordinazione			
Materiale	Suffisso superficie e materiale	Esempio	Materiale di tenuta (non occorre suffisso aggiuntivo)
Acciaio, zincato, esente da CromoVI	CF	RHV06LREDOMDCF	NBR
Acciaio, inossidabile	71	RHV06LREDOMD71	VIT

RHZ-R-ED Valvola di non ritorno

Filettatura maschio BSPP – Guarnizione ED (ISO 1179) / Estremità conica EO 24°

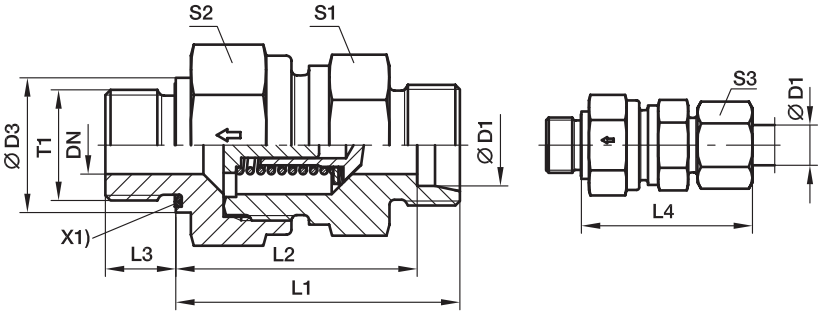

X1) Guarnizione Eolastic

Serie	D1	T1	CF DN	71 DN	D3	CF L1	71 L1	L2	L3	L4	S1	CF S2	71 S2	S3	Peso g/1 pezzo	Codice di ordinazione*	PN (bar)[1] CF	PN (bar)[1] 71
L[3])	06	G 1/8 A	3,5	3,5	14	33,5	–	26,5	8	41,0	17	17	17	14	44	**RHZ06LREDOMD**	400	250
	08	G 1/4 A	5,5	5,5	19	35,5	–	28,5	12	43,0	19	19	19	17	59	**RHZ08LREDOMD**	400	250
	10	G 1/4 A	7,5	7,5	19	46,0	–	38,5	12	53,0	22	24	24	19	125	**RHZ10LREDOMD**	400	250
	12	G 3/8 A	9,5	9,5	22	48,0	–	40,5	12	55,0	27	30	30	22	161	**RHZ12LREDOMD**	400	250
	15	G 1/2 A	11,0	11,5	27	50,0	–	42,5	14	57,5	27	32	32	27	186	**RHZ15LREDOMD**	400	250
	18	G 1/2 A	14,0	14,0	27	56,0	–	48,0	14	64,0	36	41	36	32	275	**RHZ18LREDOMD**	400	160
	22	G 3/4 A	18,0	18,0	32	64,0	–	56,0	16	72,0	41	46	46	36	463	**RHZ22LREDOMD**	250	160
	28	G 1 A	23,0	23,0	40	72,0	–	64,0	18	80,5	50	55	55	41	721	**RHZ28LREDOMD**	250	100
	35	G 1 1/4 A	29,0	29,0	50	81,0	–	70,0	20	91,5	60	65	60	50	1073	**RHZ35LREDOMD**	250	100
	42	G 1 1/2 A	29,0	29,0	55	82,0	–	70,5	22	93,0	65	70	70	60	1602	**RHZ42LREDOMD**	250	100
S[4])	06	G 1/4 A	3,5	3,5	19	38,5	–	31,5	12	46,0	19	19	19	17	71	**RHZ06SREDOMD**	420	400
	08	G 1/4 A	3,5	3,5	19	38,5	–	31,5	12	46,0	19	19	19	19	74	**RHZ08SREDOMD**	420	400
	10	G 3/8 A	5,5	5,5	22	45,5	–	38,0	12	54,0	22	24	24	22	128	**RHZ10SREDOMD**	420	400
	12	G 3/8 A	7,5	7,5	22	48,5	–	41,0	12	57,0	24	27	27	24	152	**RHZ12SREDOMD**	420	400
	14	G 1/2 A	9,5	9,5	27	52,0	–	43,5	14	61,0	27	32	32	27	223	**RHZ14SREDOMD**	420	315
	16	G 1/2 A	11,0	11,5	27	55,0	–	46,0	14	64,0	32	36	36	30	275	**RHZ16SREDOMD**	420	315
	20	G 3/4 A	15,0	15,0	32	61,0	–	50,0	16	71,5	41	50	46	36	490	**RHZ20SREDOMD**	420	250
	25	G 1 A	19,0	19,0	40	67,0	–	54,5	18	78,5	50	55	50	46	647	**RHZ25SREDOMD**	420	250
	30	G 1 1/4 A	24,0	24,0	50	78,0	–	64,0	20	90,5	55	60	60	50	1180	**RHZ30SREDOMD**	250	250
	38	G 1 1/2 A	29,0	29,0	55	88,0	–	71,5	22	102,0	65	70	70	60	1670	**RHZ38SREDOMD**	250	250

[1]) Pressione indicata = Articolo disponibile

[3]) L = Serie leggera; [4]) S = Serie pesante

$\frac{\text{PN (bar)}}{10}$ = PN (MPa)

Consegna senza dado né anello. Per informazioni sull'ordinazione di raccordi completi o sui materiali di tenuta alternativi vedere pag. I7.

*Aggiungere i **suffissi** qui di seguito in base al materiale e alla superficie richiesti.

Suffissi codice di ordinazione			
Materiale	Suffisso superficie e materiale	Esempio	Materiale di tenuta (non occorre suffisso aggiuntivo)
Acciaio, zincato, esente da CromoVI	CF	RHZ06LREDOMDCF	NBR
Acciaio, inossidabile	71	RHZ06LREDOMD71	VIT

RHV-M-ED Valvola di non ritorno

Estremità conica EO 24° / Filettatura maschio metrica – Guarnizione ED (ISO 9974)

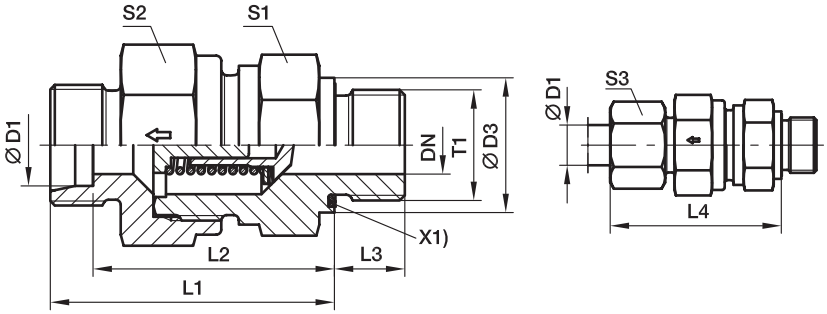

X1) Guarnizione Eolastic

Serie	D1	T1	CF DN	71 DN	D3	CF L1	71 L1	L2	L3	L4	S1	CF S2	71 S2	S3	Peso g/1 pezzo	Codice di ordinazione*	PN (bar)[1] CF	PN (bar)[1] 71
L[3])	06	M 10×1,0	3,5	3,5	14	35,0	–	28,0	8	42,5	17	17	17	14	46	**RHV06LMEDOMD**	400	250
	08	M 12×1,5	5,5	5,5	17	36,0	–	29,0	12	43,5	19	19	19	17	58	**RHV08LMEDOMD**	400	250
	10	M 14×1,5	7,5	7,5	19	45,5	–	38,5	12	53,0	22	24	34	19	108	**RHV10LMEDOMD**	400	250
	12	M 16×1,5	9,5	9,5	22	49,5	–	42,5	12	57,0	27	30	30	22	173	**RHV12LMEDOMD**	400	250
	15	M 18×1,5	11,0	11,5	24	52,5	–	45,5	12	60,5	27	32	32	27	192	**RHV15LMEDOMD**	400	250
	18	M 22×1,5	14,0	14,0	27	56,0	–	50,0	14	66,0	36	41	36	32	298	**RHV18LMEDOMD**	400	160
	22	M 26×1,5	18,0	18,0	32	64,0	–	55,0	16	71,0	41	46	46	36	446	**RHV22LMEDOMD**	250	160
	28	M 33×2,0	23,0	23,0	40	72,0	–	63,0	18	79,5	50	55	55	41	722	**RHV28LMEDOMD**	250	100
	35	M 42×2,0	29,0	29,0	50	81,0	–	69,0	20	90,5	60	65	60	50	1053	**RHV35LMEDOMD**	250	100
	42	M 48×2,0	29,0	29,0	55	82,0	–	68,5	22	91,0	65	70	70	60	1563	**RHV42LMEDOMD**	250	100
S[4])	06	M 12×1,5	3,5	3,5	17	38,5	–	31,5	12	46,0	19	19	19	17	70	**RHV06SMEDOMD**	420	400
	08	M 14×1,5	3,5	3,5	19	38,5	–	31,5	12	46,0	19	19	19	19	76	**RHV08SMEDOMD**	420	400
	10	M 16×1,5	5,5	5,5	22	45,5	–	38,0	12	54,0	22	24	24	22	124	**RHV10SMEDOMD**	420	400
	12	M 18×1,5	7,5	7,5	24	48,5	–	41,0	12	57,0	24	27	27	24	157	**RHV12SMEDOMD**	420	400
	14	M 20×1,5	9,5	9,5	26	52,5	–	44,5	14	62,0	27	32	32	27	215	**RHV14SMEDOMD**	420	315
	16	M 22×1,5	11,0	11,5	27	55,0	–	48,0	14	66,0	32	36	36	30	296	**RHV16SMEDOMD**	420	315
	20	M 27×2,0	15,0	15,0	32	61,0	–	52,0	16	73,5	41	50	46	36	521	**RHV20SMEDOMD**	420	250
	25	M 33×2,0	19,0	19,0	40	67,0	–	54,5	18	78,5	46	55	50	46	648	**RHV25SMEDOMD**	420	250
	30	M 42×2,0	24,0	24,0	50	78,0	–	64,0	20	90,5	60	60	60	50	1178	**RHV30SMEDOMD**	250	250
	38	M 48×2,0	29,0	29,0	55	88,0	–	69,5	22	100,0	65	70	70	60	1627	**RHV38SMEDOMD**	250	250

[1]) Pressione indicata = Articolo disponibile

[3]) L = Serie leggera; [4]) S = Serie pesante

$$\frac{\text{PN (bar)}}{10} = \text{PN (MPa)}$$

Consegna senza dado né anello. Per informazioni sull'ordinazione di raccordi completi o sui materiali di tenuta alternativi vedere pag. I7.

*Aggiungere i **suffissi** qui di seguito in base al materiale e alla superficie richiesti.

Suffissi codice di ordinazione			
Materiale	Suffisso superficie e materiale	Esempio	Materiale di tenuta (non occorre suffisso aggiuntivo)
Acciaio, zincato, esente da CromoVI	CF	RHV06LMEDOMDCF	NBR
Acciaio, inossidabile	71	RHV06LMEDOMD71	VIT

RHZ-M-ED Valvola di non ritorno

Filettatura maschio metrica – Guarnizione ED (ISO 9974) / Estremità conica EO 24°

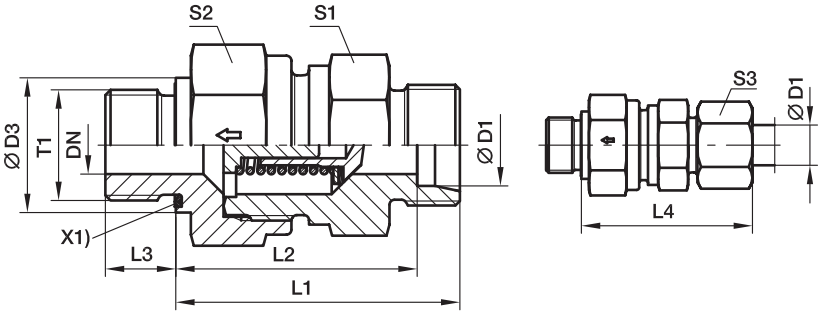

X1) Guarnizione Eolastic

Serie	D1	T1	DN	D3	L1	L2	L3	L4	S1	S2	S3	Peso g/1 pezzo	Codice di ordinazione*	PN (bar)[1] CF	PN (bar)[1] 71
L[3])	06	M 10×1,0	3,5	14	33,5	26,5	8	41,0	17	17	14	44	**RHZ06LMEDOMD**	400	250
	08	M 12×1,5	5,5	17	35,5	28,5	12	43,0	19	19	17	58	**RHZ08LMEDOMD**	400	250
	10	M 14×1,5	7,5	19	45,5	38,5	12	53,0	22	24	19	104	**RHZ10LMEDOMD**	400	250
	12	M 16×1,5	9,5	22	47,5	40,5	12	55,0	27	30	22	169	**RHZ12LMEDOMD**	400	250
	15	M 18×1,5	11,5	24	49,5	42,5	12	57,5	27	32	27	174	**RHZ15LMEDOMD**	400	250
	18	M 22×1,5	14,0	27	55,5	48,0	14	64,0	36	41	32	279	**RHZ18LMEDOMD**	400	160
	22	M 26×1,5	18,0	32	63,5	56,0	16	72,0	41	46	36	459	**RHZ22LMEDOMD**	250	160
	28	M 33×2,0	23,0	40	71,5	64,0	18	80,5	50	55	41	721	**RHZ28LMEDOMD**	250	100
	35	M 42×2,0	29,0	50	80,5	70,0	20	91,5	60	65	50	1078	**RHZ35LMEDOMD**	250	100
	42	M 48×2,0	29,0	55	81,5	70,5	22	93,0	65	70	60	1601	**RHZ42LMEDOMD**	250	100
S[4])	06	M 12×1,5	3,5	17	38,5	31,5	12	46,0	19	19	17	70	**RHZ06SMEDOMD**	420	400
	08	M 14×1,5	3,5	19	38,5	31,5	12	46,0	19	19	19	75	**RHZ08SMEDOMD**	420	400
	10	M 16×1,5	5,5	22	45,5	38,0	12	54,0	22	24	22	123	**RHZ10SMEDOMD**	420	400
	12	M 18×1,5	7,5	24	48,5	41,0	12	57,0	24	27	24	157	**RHZ12SMEDOMD**	420	400
	14	M 20×1,5	9,5	26	51,5	43,5	14	61,0	27	32	27	214	**RHZ14SMEDOMD**	420	315
	16	M 22×1,5	11,5	27	54,5	46,0	14	64,0	32	36	30	279	**RHZ16SMEDOMD**	420	315
	20	M 27×2,0	15,0	32	60,5	50,0	16	71,5	41	50	36	487	**RHZ20SMEDOMD**	420	250
	25	M 33×2,0	19,0	40	68,0	54,5	18	78,5	46	55	46	647	**RHZ25SMEDOMD**	420	250
	30	M 42×2,0	24,0	50	77,5	64,0	20	90,5	60	60	50	1180	**RHZ30SMEDOMD**	250	250
	38	M 48×2,0	29,0	55	87,5	71,5	22	102,0	65	70	60	1669	**RHZ38SMEDOMD**	250	250

[1]) Pressione indicata = Articolo disponibile

[3]) L = Serie leggera; [4]) S = Serie pesante

$$\frac{\text{PN (bar)}}{10} = \text{PN (MPa)}$$

Consegna senza dado né anello. Per informazioni sull'ordinazione di raccordi completi o sui materiali di tenuta alternativi vedere pag. I7.

*Aggiungere i **suffissi** qui di seguito in base al materiale e alla superficie richiesti.

Suffissi codice di ordinazione			
Materiale	Suffisso superficie e materiale	Esempio	Materiale di tenuta (non occorre suffisso aggiuntivo)
Acciaio, zincato, esente da CromoVI	CF	RHZ06LMEDOMDCF	NBR
Acciaio, inossidabile	71	RHZ06LMEDOMD71	VIT

RHDI Valvola di non ritorno

Filettatura femmina BSPP (ISO 1179-1) / Filettatura femmina BSPP (ISO 1179-1)

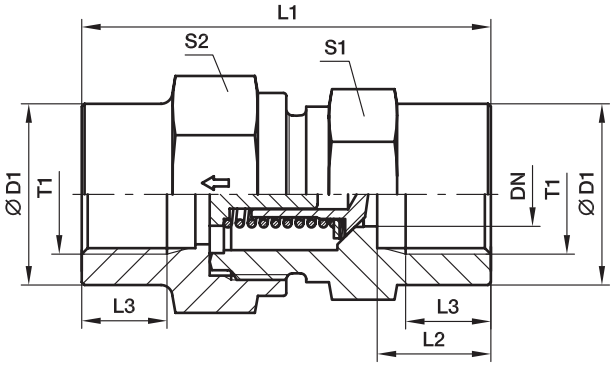

Serie	T1	DN	D1	L1	L2	L3	S1	S2	Peso g/1 pezzo	Codice di ordinazione*	PN (bar)[1] CF	PN (bar)[1] 71
L[3])	G 1/8	3,5	19	42,5	12,0	8,0	19	19	76	**RHDI1/8**	400	400
	G 1/4	3,5	19	51,0	16,0	12,0	19	19	82	**RHDI1/4**	400	400
	G 3/8	7,5	24	60,0	17,0	12,0	24	27	157	**RHDI3/8**	400	400
	G 1/2	11,5	32	72,0	20,0	15,0	32	36	344	**RHDI1/2**	315	315
	G 3/4	15,0	41	84,0	22,0	16,5	41	46	664	**RHDI3/4**	250	250
	G 1	19,0	46	95,0	25,5	19,0	46	50	821	**RHDI1**	250	250
	G 1 1/4	24,0	60	110,0	28,0	21,5	60	60	1581	**RHDI11/4**	250	250
	G 1 1/2	29,0	65	114,0	28,5	22,0	65	70	1919	**RHDI11/2**	250	250

[1]) Pressione indicata = Articolo disponibile

[3]) L = Serie leggera

$\frac{\text{PN (bar)}}{10}$ = PN (MPa)

Consegna senza dado né anello. Per informazioni sull'ordinazione di raccordi completi o sui materiali di tenuta alternativi vedere pag. I7.

*Aggiungere i **suffissi** qui di seguito in base al materiale e alla superficie richiesti.

Suffissi codice di ordinazione			
Materiale	Suffisso superficie e materiale	Esempio	Materiale di tenuta (non occorre suffisso aggiuntivo)
Acciaio, zincato, esente da CromoVI	CF	RHDI1/8CF	NBR
Acciaio, inossidabile	71	RHDI1/871	VIT

RVP Cartuccia valvola di non ritorno

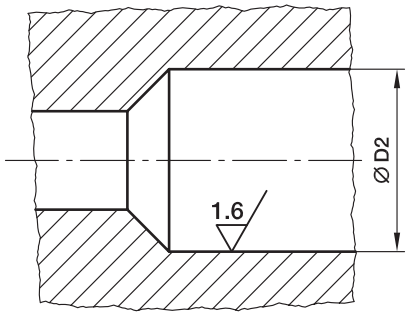

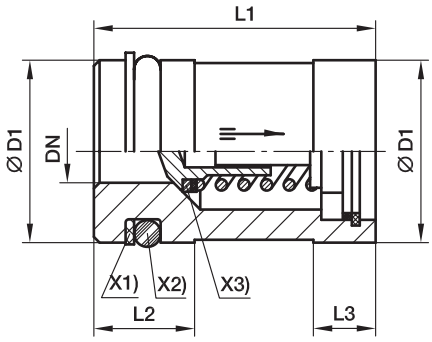

X1) Anello di supporto PTFE
X2) O-ring NBR
X3) Guarnizione di tenuta NBR

Valvola	DN	D1	D2	L1 ± 0,15	L2	L3	O-ring	Anello di supporto	Peso g/1 pezzo	Codice di ordinazione*	PN (bar)[1] CF	PN (bar)[1] 71
6-L/6 & 8-S	3,5	12,945 ± 0,055	13 +0,12 +0,05	23,15	9,5	6,0	8,3×2,4	SRA 13-2,05-1,0	21	**RVP13**	420	400
8-L/10-S	5,5	15,945 ± 0,055	16 +0,12 +0,05	26,65	9,5	6,5	11,3×2,4	SRA 16-2,05-1,0	32	**RVP16**	420	400
10-L/12-S	7,5	19,935 ± 0,065	20 +0,142 +0,065	30,15	9,5	6,5	15,3×2,4	SRA 20-2,05-1,0	54	**RVP20**	420	400
12-L/14-S	9,5	23,935 ± 0,065	24 +0,149 +0,065	35,15	12,0	7,5	18,2×3	SRA 24-2,6-1,0	80	**RVP24**	420	315
15-L/16-S	11,5	26,935 ± 0,065	27 +0,149 +0,065	38,15	12,0	7,5	21,2×3	SRA 27-2,6-1,0	105	**RVP27**	420	315
18-L/20-S	15,0	34,92 ± 0,08	35 +0,18 +0,08	44,65	12,0	9,5	29,2×3	SRA 35-2,5-1,0	204	**RVP35**	420	250
22-L/25-S	19,0	39,92 ± 0,08	40 +0,18 +0,08	50,65	12,0	11,0	34,2×3	SRA 40-2,5-1,0	275	**RVP40**	420	250
28-L/30-S	24,0	46,92 ± 0,08	47 +0,18 +0,08	60,15	13,0	13,0	41,2×3	SRA 47-2,6-1,5	412	**RVP47**	250	250
35-L/38-S	29,0	54,905 ± 0,095	55 +0,22 +0,01	70,15	16,0	13,0	44,2×5,7	SRA 55-5,1-1,5	607	**RVP55**	250	250

[1]) Pressione indicata = Articolo disponibile

$$\frac{\text{PN (bar)}}{10} = \text{PN (MPa)}$$

Consegna senza dado né anello. Per informazioni sull'ordinazione di raccordi completi o sui materiali di tenuta alternativi vedere pag. I7.

O

*Aggiungere i **suffissi** qui di seguito in base al materiale e alla superficie richiesti.

Suffissi codice di ordinazione			
Materiale	Suffisso superficie e materiale	Esempio	Materiale di tenuta (non occorre suffisso aggiuntivo)
Acciaio, zincato, esente da CromoVI	CF	RVP13CF	NBR
Acciaio, inossidabile	71	RVP1371	VIT

I-TL Parti interne valvola di non ritorno

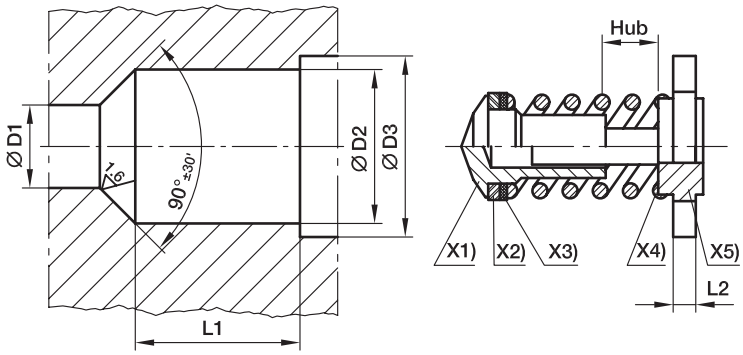

X1) cono otturatore
X2) guarnizione di tenuta (lato liscio dell'otturatore)
X3) disco d'appoggio
X4) molla
X5) disco di passaggio

Serie	Diam. est. tubo	D1 +0,1	D2 +0,1	D3 +0,1	L1 ±0,1	L2	Hub	Peso g/1 pezzo	Codice di ordinazione*	PN (bar)[1] CF	71
L/S/S	06/06/08	3,5	7,5	8,6	8,2	2,0	1,0	2	**ITL06L/06+08S**	*	*
L/S	08/10	5,5	10,2	11,6	11,0	2,0	1,7	4	**ITL08L/10S**	*	*
L/S	10/12	7,5	13,0	14,1	14,0	2,0	2,3	7	**ITL10L/12S**	*	*
L/S	12/14	9,5	16,7	18,1	16,5	2,5	2,9	13	**ITL12L/14S**	*	*
L/S	15/16	11,5	19,5	20,6	19,0	2,5	3,5	18	**ITL15L/16S**	*	*
L/S	18/20	15,0	25,2	27,1	22,5	3,0	4,4	37	**ITL18L/20S**	*	*
L/S	22/25	19,0	30,8	32,6	27,0	3,0	5,5	54	**ITL22L/25S**	*	*
L/S	28/30	24,0	38,6	40,6	32,5	3,5	7,3	107	**ITL28L/30S**	*	*
L/L/S	35/38/42	29,0	45,7	48,1	37,5	3,5	8,9	144	**ITL35L+42I/38S**	*	*

* = Articolo disponibile

Consegna senza dado né anello. Per informazioni sull'ordinazione di raccordi completi o sui materiali di tenuta alternativi vedere pag. I7.

*Aggiungere i **suffissi** qui di seguito in base al materiale e alla superficie richiesti.

Suffissi codice di ordinazione			
Materiale	Suffisso superficie e materiale	Esempio	Materiale di tenuta (non occorre suffisso aggiuntivo)
Acciaio, zincato, esente da CromoVI	CF	ITL06L/06+008S	NBR
Acciaio, inossidabile	71	ITL06L71/06+008S	VIT

RHD/V/Z Valvola di non ritorno con connessioni O-Lok® o Triple-Lok®

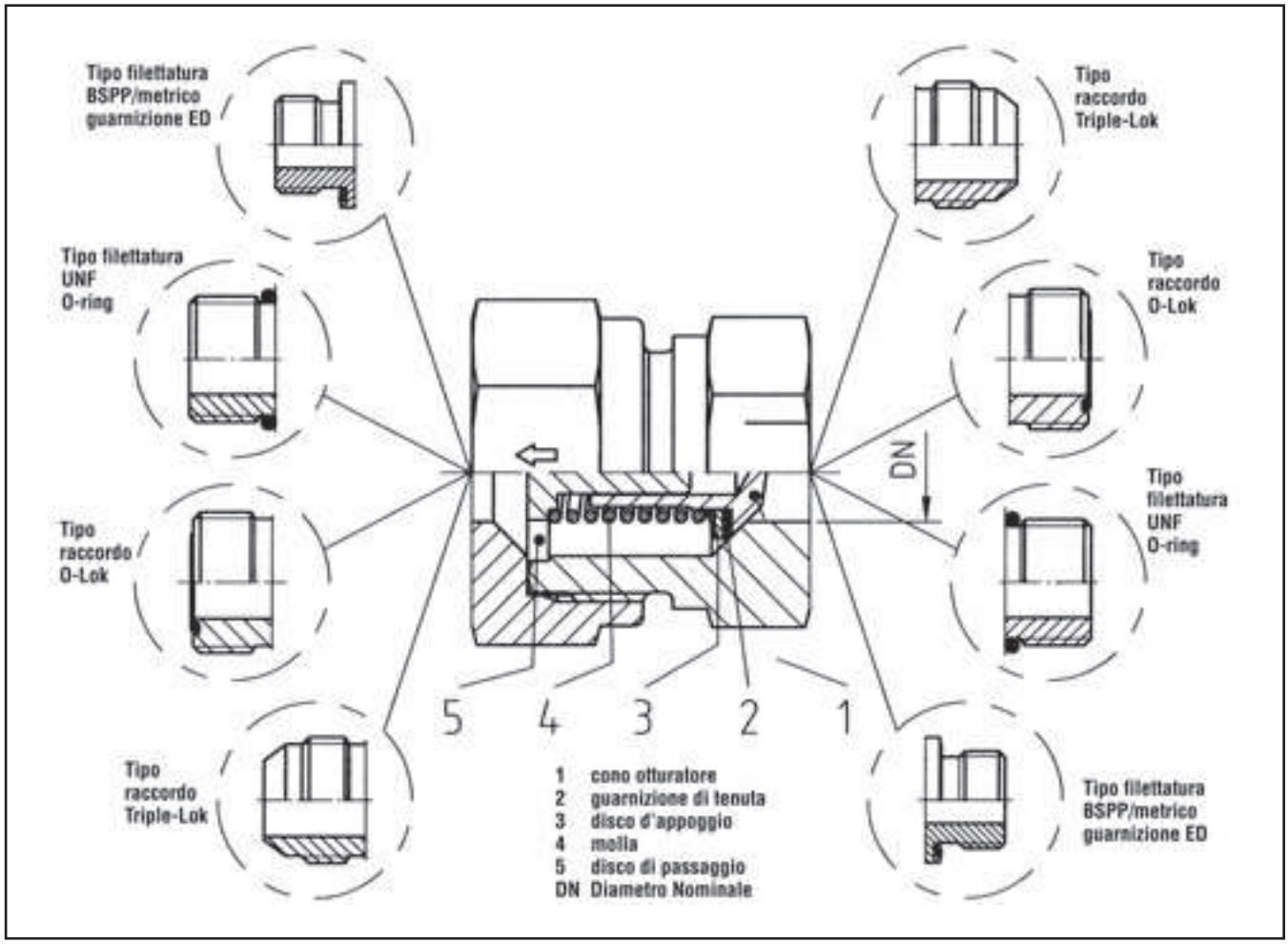

Materiale:

- Acciaio zincato, esente da CromoVI, guarnizioni in NBR (es. Perbunan).
- Parti interne in acciaio inossidabile con FKM disponibili su richiesta.

Perbunan = sono marchi registrati di Bayer

O

RHDMLOS Valvola di non ritorno

Estremità ORFS O-Lok® / Estremità ORFS O-Lok®

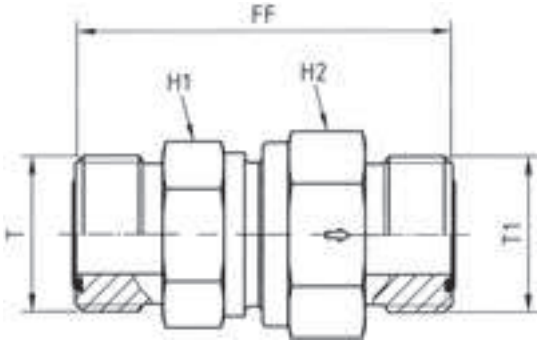

Diam. est. 1 tubo mm	Diam. est. 1 tubo pollici	Diam. est. 2 tubo mm	Diam. est. 2 tubo pollici	Filettatura ORFS (UN/UNF) T	Filettatura ORFS (UN/UNF) T1	H1	H2	FF	DN (diam. nomi-nale)	Peso g/1 pezzo	Codice di ordinazione*	PN (bar)[1]) CF
6	1/4	6	1/4	9/16-18 UNF	9/16-18 UNF	19	19	44,5	3,5	108	**4RHDMLOS**	420
8, 10	5/16, 3/8	8, 10	5/16, 3/8	11/16-16 UNF	11/16-16 UNF	22	24	53,5	5,5	188	**6RHDMLOS**	420
12	1/2	12	1/2	13/16-16 UNF	13/16-16 UNF	24	27	59,5	7,5	223	**8RHDMLOS**	420
14, 15, 16	5/8	14, 15, 16	5/8	1-14 UNF	1-14 UNF	32	36	70,5	11,5	428	**10RHDMLOS**	420
18, 20	3/4	18, 20	3/4	1 3/16-12 UNF	1 3/16-12 UNF	41	46	77,5	15,0	731	**12RHDMLOS**	420
22, 25	1	22, 25	1	1 7/16-12 UNF	1 7/16-12 UNF	46	50	81,5	19,0	1076	**16RHDMLOS**	420
28, 30, 32	1 1/4	28, 30, 32	1 1/4	1 11/16-12 UNF	1 11/16-12 UNF	60	60	91,5	24,0	1630	**20RHDMLOS**	250
35, 38	1 1/2	35, 38	1 1/2	2-12 UNF	2-12 UNF	65	70	98,5	29,0	2362	**24RHDMLOS**	250

[1]) Pressione indicata = Articolo disponibile

$$\frac{\text{PN (bar)}}{10} = \text{PN (MPa)}$$

Consegna senza dado né anello. Per informazioni sull'ordinazione di raccordi completi o sui materiali di tenuta alternativi vedere pag. I7.

*Aggiungere i **suffissi** qui di seguito in base al materiale e alla superficie richiesti.

Suffissi codice di ordinazione			
Materiale	Suffisso superficie e materiale	Esempio	Materiale di tenuta (non occorre suffisso aggiuntivo)
Acciaio, zincato, esente da CromoVI	CF	4RHDMLOSCF	NBR

RHV42EDMLOS Valvola di non ritorno

Filettatura maschio BSPP – Guarnizione ED (ISO 1179) / Estremità ORFS O-Lok®

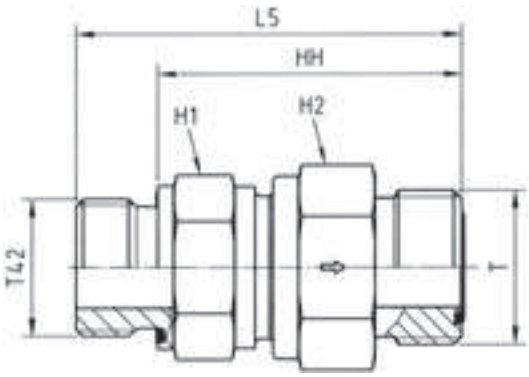

Diam. est. tubo mm	Diam. est. tubo pollici	Filettatura BSPP T42	Filettatura ORFS (UN/UNF) T	H1	H2	L5	HH	DN (diam. nominale)	Peso g/1 pezzo	Codice di ordinazione*	PN (bar)[1] CF
6	1/4	G 1/8	9/16-18 UNF	19	19	44,5	36,5	3,5	92	**4RHV42EDMLOS**	420
8, 10	5/16, 3/8	G 1/4	11/16-16 UNF	24	27	56,5	44,5	6,5	165	**6RHV42EDMLOS**	420
12	1/2	G 3/8	13/16-16 UNF	24	27	61,5	49,5	7,5	191	**8RHV42EDMLOS**	420
14, 15, 16	5/8	G 1/2	1-14 UNF	32	36	70,0	56,0	11,5	366	**10RHV42EDMLOS**	420
18, 20	3/4	G 3/4	1 3/16-12 UNF	41	46	77,5	63,5	15,0	631	**12RHV42EDMLOS**	420
22, 25	1	G 1	1 7/16-12 UNF	46	50	84,0	66,0	19,0	863	**16RHV42EDMLOS**	420
28, 30, 32	1 1/4	G 1 1/4	1 11/16-12 UNF	60	60	95,0	75,0	24,0	1403	**20RHV42EDMLOS**	250
35, 38	1 1/2	G 1 1/2	2-12 UNF	65	70	105,0	83,0	29,0	1969	**24RHV42EDMLOS**	250

[1]) Pressione indicata = Articolo disponibile

$$\frac{\text{PN (bar)}}{10} = \text{PN (MPa)}$$

Consegna senza dado né anello. Per informazioni sull'ordinazione di raccordi completi o sui materiali di tenuta alternativi vedere pag. I7.

*Aggiungere i **suffissi** qui di seguito in base al materiale e alla superficie richiesti.

Suffissi codice di ordinazione			
Materiale	Suffisso superficie e materiale	Esempio	Materiale di tenuta (non occorre suffisso aggiuntivo)
Acciaio, zincato, esente da CromoVI	CF	4RHV42EDMLOSCF	NBR

RHZ42EDMLOS Valvola di non ritorno

Estremità ORFS O-Lok® / Filettatura maschio BSPP – Guarnizione ED (ISO 1179)

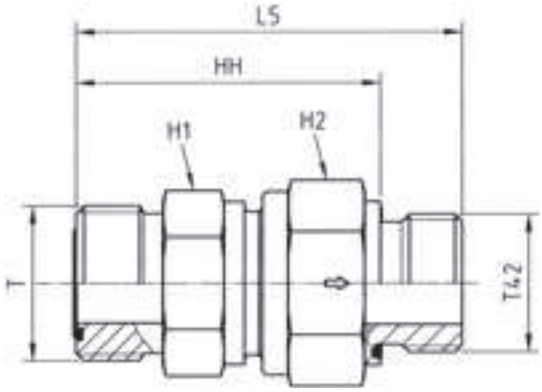

Diam. est. tubo mm	Diam. est. tubo pollici	Filettatura BSPP T42	Filettatura ORFS (UN/UNF) T	H1	H2	L5	HH	DN (diam. nominale)	Peso g/1 pezzo	Codice di ordinazione*	PN (bar)[1] CF
6	1/4	G 1/8	9/16-18 UNF	19	19	44,5	36,5	3,5	91	**4RHZ42EDMLOS**	420
8, 10	5/16, 3/8	G 1/4	11/16-16 UNF	24	27	56,5	44,5	6,5	161	**6RHZ42EDMLOS**	420
12	1/2	G 3/8	13/16-16 UNF	24	27	61,5	49,5	7,5	190	**8RHZ42EDMLOS**	420
14, 15, 16	5/8	G 1/2	1-14 UNF	32	36	70,0	56,0	11,5	348	**10RHZ42EDMLOS**	420
18, 20	3/4	G 3/4	1 3/16-12 UNF	41	46	77,5	53,5	15,0	634	**12RHZ42EDMLOS**	420
22, 25	1	G 1	1 7/16-12 UNF	46	50	84,0	66,0	19,0	863	**16RHZ42EDMLOS**	420
28, 30, 32	1 1/4	G 1 1/4	1 11/16-12 UNF	60	60	95,0	75,0	24,0	1397	**20RHZ42EDMLOS**	250
35, 38	1 1/2	G 1 1/2	2-12 UNF	65	70	105,0	83,0	29,0	2001	**24RHZ42EDMLOS**	250

[1]) Pressione indicata = Articolo disponibile

$$\frac{\text{PN (bar)}}{10} = \text{PN (MPa)}$$

Consegna senza dado né anello. Per informazioni sull'ordinazione di raccordi completi o sui materiali di tenuta alternativi vedere pag. I7.

*Aggiungere i **suffissi** qui di seguito in base al materiale e alla superficie richiesti.

Suffissi codice di ordinazione			
Materiale	Suffisso superficie e materiale	Esempio	Materiale di tenuta (non occorre suffisso aggiuntivo)
Acciaio, zincato, esente da CromoVI	CF	4RHZ42EDMLOSCF	NBR

RHV5OMLOS Valvola di non ritorno

Filettatura maschio UN/UNF – O-ring (ISO 11926) / Estremità ORFS O-Lok®

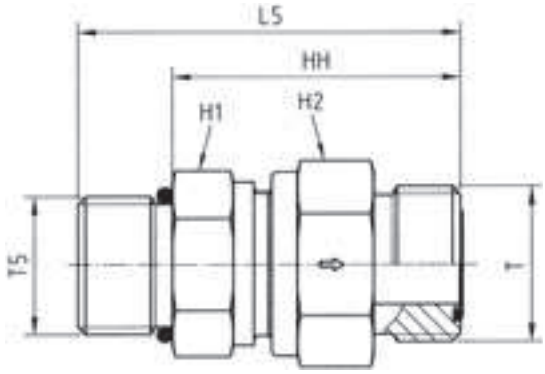

Diam. est. tubo mm	Diam. est. tubo pollici	Filettatura maschio UNF T5	Filettatura ORFS (UN/UNF) T	H1	H2	L5	HH	DN (diam. nomi-nale)	Peso g/1 pezzo	Codice di ordinazione*	PN (bar)[1] CF
6	1/4	7/16-20 UNF	9/16-18 UNF	19	19	45,5	34,5	3,5	92	**4RHV5OMLOS**	420
8, 10	5/16, 3/8	9/16-18 UNF	11/16-16 UNF	22	24	54,5	42,5	5,5	165	**6RHV5OMLOS**	420
12	1/2	3/4-16 UNF	13/16-16 UNF	24	27	60,5	46,5	5,5	165	**8RHV5OMLOS**	420
14, 15, 16	5/8	7/8-14 UNF	1-14 UNF	32	36	71,0	55,0	11,5	366	**10RHV5OMLOS**	420
18, 20	3/4	1 1/16-12 UN	1 3/16-12 UNF	41	46	79,0	60,5	15,0	631	**12RHV5OMLOS**	420
22, 25	1	1 5/16-12 UN	1 7/16-12 UNF	46	50	82,5	64,0	19,0	863	**16RHV5OMLOS**	420
28, 30, 32	1 1/4	1 5/8-12 UN	1 11/16-12 UNF	60	60	92,5	74,0	24,0	1403	**20RHV5OMLOS**	250
35, 38	1 1/2	1 7/8-12 UN	2-12 UNF	65	70	99,5	81,0	29,0	1969	**24RHV5OMLOS**	250

[1]) Pressione indicata = Articolo disponibile

$$\frac{\text{PN (bar)}}{10} = \text{PN (MPa)}$$

Consegna senza dado né anello. Per informazioni sull'ordinazione di raccordi completi o sui materiali di tenuta alternativi vedere pag. I7.

O

*Aggiungere i **suffissi** qui di seguito in base al materiale e alla superficie richiesti.

Suffissi codice di ordinazione			
Materiale	Suffisso superficie e materiale	Esempio	Materiale di tenuta (non occorre suffisso aggiuntivo)
Acciaio, zincato, esente da CromoVI	CF	RHV5OMLOSCF	NBR

RHZ5OMLOS Valvola di non ritorno

Estremità ORFS O-Lok® / Filettatura maschio UN/UNF – O-ring (ISO 11926)

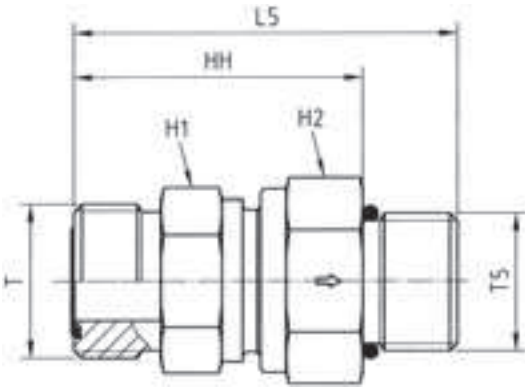

Diam. est. tubo mm	Diam. est. tubo pollici	Filettatura maschio UNF T5	Filettatura ORFS (UN/UNF) T	H1	H2	L5	HH	DN (diam. nomi-nale)	Peso g/1 pezzo	Codice di ordinazione*	PN (bar)[1] CF
6	1/4	7/16-20 UNF	9/16-18 UNF	19	19	45,5	34,5	3,5	91	**4RHZ5OMLOS**	420
8, 10	5/16, 3/8	9/16-18 UNF	11/16-16 UNF	22	24	54,5	42,5	5,5	161	**6RHZ5OMLOS**	420
12	1/2	3/4-16 UNF	13/16-16 UNF	24	27	60,5	46,5	5,5	161	**8RHZ5OMLOS**	420
14, 15, 16	5/8	7/8-14 UNF	1-14 UNF	32	36	71,0	55,0	11,5	348	**10RHZ5OMLOS**	420
18, 20	3/4	1 1/16-12 UN	1 3/16-12 UNF	41	46	79,0	60,5	15,0	634	**12RHZ5OMLOS**	420
22, 25	1	1 5/16-12 UN	1 7/16-12 UNF	46	50	82,5	64,0	19,0	863	**16RHZ5OMLOS**	420
28, 30, 32	1 1/4	1 5/8-12 UN	1 11/16-12 UNF	60	60	92,5	74,0	24,0	1397	**20RHZ5OMLOS**	250
35, 38	1 1/2	1 7/8-12 UN	2-12 UNF	65	70	99,5	81,0	29,0	2001	**24RHZ5OMLOS**	250

[1]) Pressione indicata = Articolo disponibile

$$\frac{\text{PN (bar)}}{10} = \text{PN (MPa)}$$

Consegna senza dado né anello. Per informazioni sull'ordinazione di raccordi completi o sui materiali di tenuta alternativi vedere pag. I7.

*Aggiungere i **suffissi** qui di seguito in base al materiale e alla superficie richiesti.

Suffissi codice di ordinazione			
Materiale	Suffisso superficie e materiale	Esempio	Materiale di tenuta (non occorre suffisso aggiuntivo)
Acciaio, zincato, esente da CromoVI	CF	4RHZ5OMLOSCF	NBR

RHV82EDMLOS Valvola di non ritorno

Filettatura maschio metrica – Guarnizione ED (ISO 9974) / Estremità ORFS O-Lok®

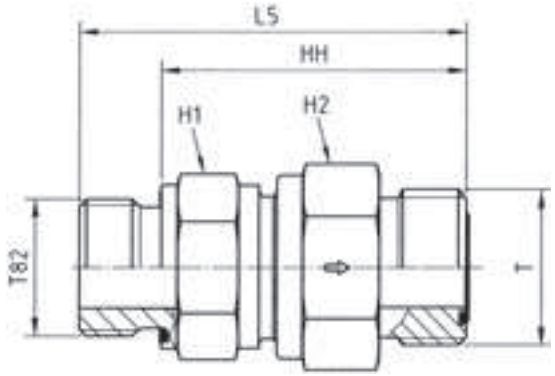

Diam. est. tubo mm	Diam. est. tubo pollici	Filettatura metrica T82	Filettatura ORFS (UN/UNF) T	H1	H2	L5	HH	DN (diam. nominale)	Peso g/1 pezzo	Codice di ordinazione*	PN (bar)[1] CF
6	1/4	M 12×1,5	9/16-18 UNF	19	19	48,5	36,5	3,5	89	**4M12RHV82EDMLOS**	420
8, 10	5/16, 3/8	M 16×1,5	11/16-16 UNF	22	24	56,5	44,5	5,5	157	**6M16RHV82EDMLOS**	420
12	1/2	M 18×1,5	13/16-16 UNF	24	27	61,5	49,5	7,5	195	**8M18RHV82EDMLOS**	420
14, 15, 16	5/8	M 22×1,5	1-14 UNF	32	36	72,0	58,0	11,5	369	**10M22RHV82EDMLOS**	420
18, 20	3/4	M 27×2,0	1 3/16-12 UNF	41	46	79,5	63,5	15,0	628	**12M27RHV82EDMLOS**	420
22, 25	1	M 33×2,0	1 7/16-12 UNF	46	50	84,0	66,0	19,0	867	**16M33RHV82EDMLOS**	420
28, 30, 32	1 1/4	M 42×2,0	1 11/16-12 UNF	60	60	95,0	75,0	24,0	1409	**20M42RHV82EDMLOS**	250
35, 38	1 1/2	M 48×2,0	2-12 UNF	65	70	103,0	81,0	29,0	1970	**24M48RHV82EDMLOS**	250

[1]) Pressione indicata = Articolo disponibile

$$\frac{\text{PN (bar)}}{10} = \text{PN (MPa)}$$

Consegna senza dado né anello. Per informazioni sull'ordinazione di raccordi completi o sui materiali di tenuta alternativi vedere pag. I7.

O

*Aggiungere i **suffissi** qui di seguito in base al materiale e alla superficie richiesti.

Suffissi codice di ordinazione			
Materiale	Suffisso superficie e materiale	Esempio	Materiale di tenuta (non occorre suffisso aggiuntivo)
Acciaio, zincato, esente da CromoVI	CF	4M12RHV82EDMLOSCF	NBR

RHZ82EDMLOS Valvola di non ritorno

Estremità ORFS O-Lok® / Filettatura maschio metrica – Guarnizione ED (ISO 9974)

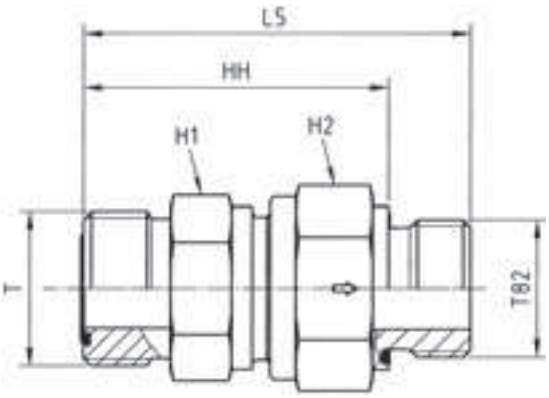

Diam. est. tubo mm	Diam. est. tubo pollici	Filettatura metrica T82	Filettatura ORFS (UN/UNF) T	H1	H2	L5	HH	DN (diam. nominale)	Peso g/1 pezzo	Codice di ordinazione*	PN (bar)[1] CF
6	1/4	M 12×1,5	9/16-18 UNF	19	19	48,5	36,5	3,5	89	**4M12RHZ82EDMLOS**	420
8, 10	5/16, 3/8	M 16×1,5	11/16-16 UNF	24	27	59,1	47,1	7,5	156	**6M16RHZ82EDMLOS**	420
12	1/2	M 18×1,5	13/16-16 UNF	24	27	61,5	49,5	7,5	195	**8M18RHZ82EDMLOS**	420
14, 15, 16	5/8	M 22×1,5	1-14 UNF	32	36	70,0	56,0	11,5	352	**10M22RHZ82EDMLOS**	420
18, 20	3/4	M 27×2,0	1 3/16-12 UNF	41	46	77,5	61,5	15,0	608	**12M27RHZ82EDMLOS**	420
22, 25	1	M 33×2,0	1 7/16-12 UNF	46	50	84,0	66,0	19,0	965	**16M33RHZ82EDMLOS**	420
28, 30, 32	1 1/4	M 42×2,0	1 11/16-12 UNF	60	60	95,0	75,0	24,0	1396	**20M42RHZ82EDMLOS**	250
35, 38	1 1/2	M 48×2,0	2-12 UNF	65	70	115,0	93,0	29,0	1978	**24M48RHZ82EDMLOS**	250

[1]) Pressione indicata = Articolo disponibile

$$\frac{\text{PN (bar)}}{10} = \text{PN (MPa)}$$

Consegna senza dado né anello. Per informazioni sull'ordinazione di raccordi completi o sui materiali di tenuta alternativi vedere pag. I7.

*Aggiungere i **suffissi** qui di seguito in base al materiale e alla superficie richiesti.

Suffissi codice di ordinazione			
Materiale	Suffisso superficie e materiale	Esempio	Materiale di tenuta (non occorre suffisso aggiuntivo)
Acciaio, zincato, esente da CromoVI	CF	4M12RHZ82EDMLOSCF	NBR

RHDMTXS Valvola di non ritorno

Estremità svasata a 37° Triple-Lok® / Estremità svasata a 37° Triple-Lok®

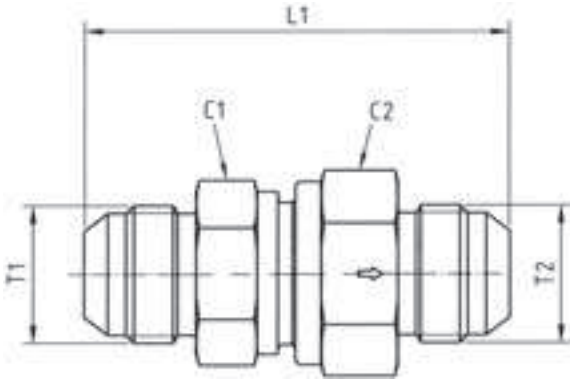

Diam. est. 1 tubo mm	Diam. est. 1 tubo pollici	Diam. est. 2 tubo mm	Diam. est. 2 tubo pollici	Filettatura JIC SAE T1	Filettatura JIC SAE T2	C1	C2	L1	DN (diam. nominale)	Peso g/1 pezzo	Codice di ordinazione*	PN (bar)[1] CF
6	1/4	6	1/4	7/16-20 UNF	7/16-20 UNF	19	19	52,5	3,5	108	**4RHDMTXS**	420
8	5/16	8	5/16	1/2-20 UNF	1/2-20 UNF	22	24	59,5	5,5	188	**5RHDMTXS**	420
10	3/8	10	3/8	9/16-18 UNF	9/16-18 UNF	24	27	61,5	7,5	223	**6RHDMTXS**	420
12	1/2	12	1/2	3/4-16 UNF	3/4-16 UNF	27	32	69,5	9,5	324	**8RHDMTXS**	420
14, 15, 16	5/8	14, 15, 16	5/8	7/8-14 UNF	7/8-14 UNF	32	36	78,5	11,5	428	**10RHDMTXS**	350
18, 20	3/4	18, 20	3/4	1 1/16-12 UN	1 1/16-12 UN	41	46	87,5	15,0	731	**12RHDMTXS**	350
25	1	25	1	1 5/16-12 UN	1 5/16-12 UN	46	50	92,5	19,0	1076	**16RHDMTXS**	280
28, 30, 32	1 1/4	28, 30, 32	1 1/4	1 5/8-12 UN	1 5/8-12 UN	60	60	105,5	24,0	1630	**20RHDMTXS**	250
35, 38	1 1/2	35, 38	1 1/2	1 7/8-12 UN	1 7/8-12 UN	65	70	118,5	29,0	2362	**24RHDMTXS**	210

[1]) Pressione indicata = Articolo disponibile

$$\frac{\text{PN (bar)}}{10} = \text{PN (MPa)}$$

Consegna senza dado né anello. Per informazioni sull'ordinazione di raccordi completi o sui materiali di tenuta alternativi vedere pag. I7.

*Aggiungere i **suffissi** qui di seguito in base al materiale e alla superficie richiesti.

Suffissi codice di ordinazione			
Materiale	Suffisso superficie e materiale	Esempio	Materiale di tenuta (non occorre suffisso aggiuntivo)
Acciaio, zincato, esente da CromoVI	CF	4RHDMTXSCF	NBR

RHV42EDMXS Valvola di non ritorno

Filettatura maschio BSPP – Guarnizione ED (ISO 1179) / Estremità svasata a 37° Triple-Lok®

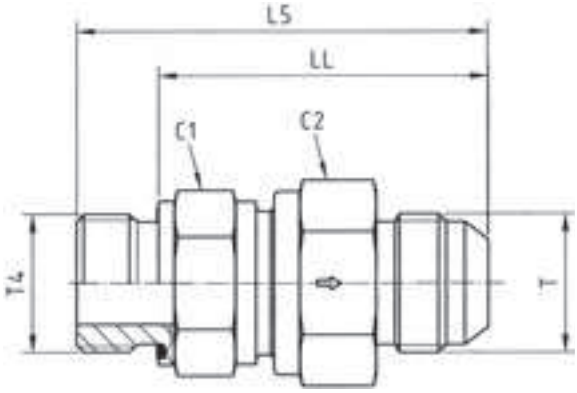

Diam. est. tubo mm	Diam. est. tubo pollici	BSPP Filettatura T4	Filettatura JIC SAE T	C1	C2	L5	LL	DN (diam. nominale)	Peso g/1 pezzo	Codice di ordinazione*	PN (bar)[1] CF
6	1/4	G 1/8	7/16-20 UNF	19	19	48,0	40,0	3,5	92	**4RHV42EDMXS**	420
8	5/16	G 1/4	1/2-20 UNF	22	24	59,5	47,5	5,5	165	**5-4RHV42EDMXS**	420
10	3/8	G 1/4	9/16-18 UNF	24	27	62,0	50,0	7,5	191	**6RHV42EDMXS**	420
12	1/2	G 3/8	3/4-16 UNF	27	32	67,0	55,0	9,5	277	**8RHV42EDMXS**	420
14, 15, 16	5/8	G 1/2	7/8-14 UNF	32	36	76,0	62,0	11,5	366	**10RHV42EDMXS**	350
18, 20	3/4	G 3/4	1 1/16-12 UN	41	46	84,5	68,5	15,0	631	**12RHV42EDMXS**	350
25	1	G 1	1 5/16-12 UN	46	50	89,5	71,5	19,0	863	**16RHV42EDMXS**	280
28, 30, 32	1 1/4	G 1 1/4	1 5/8-12 UN	60	60	102,0	82,0	24,0	1403	**20RHV42EDMXS**	250
35, 38	1 1/2	G 1 1/2	1 7/8-12 UN	65	70	113,0	91,0	29,0	1969	**24RHV42EDMXS**	210

[1]) Pressione indicata = Articolo disponibile

$$\frac{\text{PN (bar)}}{10} = \text{PN (MPa)}$$

Consegna senza dado né anello. Per informazioni sull'ordinazione di raccordi completi o sui materiali di tenuta alternativi vedere pag. I7.

*Aggiungere i **suffissi** qui di seguito in base al materiale e alla superficie richiesti.

Suffissi codice di ordinazione			
Materiale	Suffisso superficie e materiale	Esempio	Materiale di tenuta (non occorre suffisso aggiuntivo)
Acciaio, zincato, esente da CromoVI	CF	4RHV42EDMXSCF	NBR

RHZ42EDMXS Valvola di non ritorno

Estremità svasata a 37° Triple-Lok® / Filettatura maschio BSPP – Guarnizione ED (ISO 1179)

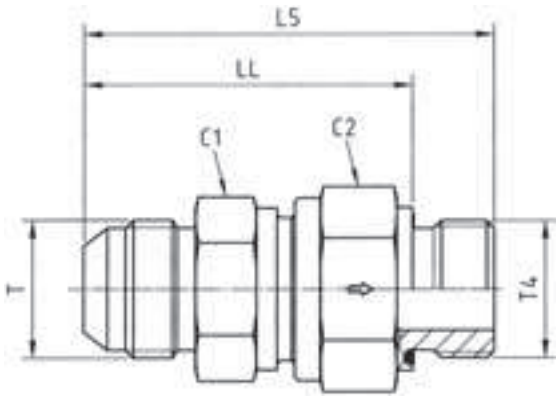

Diam. est. tubo mm	Diam. est. tubo pollici	BSPP Filettatura T4	Filettatura JIC SAE T	C1	C2	L5	LL	DN (diam. nominale)	Peso g/1 pezzo	Codice di ordinazione*	PN (bar)[1] CF
6	1/4	G 1/8	7/16-20 UNF	19	19	48,0	40,0	3,5	89	**4RHZ42EDMXS**	420
8	5/16	G 1/4	1/2-20 UNF	22	24	59,0	47,0	5,5	156	**5-4RHZ42EDMXS**	420
10	3/8	G 1/4	9/16-18 UNF	24	27	62,0	50,0	7,5	190	**6RHZ42EDMXS**	420
12	1/2	G 3/8	3/4-16 UNF	27	32	66,0	54,0	9,5	278	**8RHZ42EDMXS**	420
14, 15, 16	5/8	G 1/2	7/8-14 UNF	32	36	74,0	60,0	11,5	348	**10RHZ42EDMXS**	350
18, 20	3/4	G 3/4	1 1/16-12 UN	41	46	82,5	66,5	15,0	634	**12RHZ42EDMXS**	350
25	1	G 1	1 5/16-12 UN	46	50	89,5	71,5	19,0	863	**16RHZ42EDMXS**	280
28, 30, 32	1 1/4	G 1 1/4	1 5/8-12 UN	60	60	102,0	82,0	24,0	1397	**20RHZ42EDMXS**	250
35, 38	1 1/2	G 1 1/2	1 7/8-12 UN	65	70	115,0	93,0	29,0	2001	**24RHZ42EDMXS**	210

[1]) Pressione indicata = Articolo disponibile

$\frac{\text{PN (bar)}}{10}$ = PN (MPa)

Consegna senza dado né anello. Per informazioni sull'ordinazione di raccordi completi o sui materiali di tenuta alternativi vedere pag. I7.

O

*Aggiungere i **suffissi** qui di seguito in base al materiale e alla superficie richiesti.

Suffissi codice di ordinazione			
Materiale	Suffisso superficie e materiale	Esempio	Materiale di tenuta (non occorre suffisso aggiuntivo)
Acciaio, zincato, esente da CromoVI	CF	4RHZ42EDMXSCF	NBR

RHV5OMXS Valvola di non ritorno

Filettatura maschio UN/UNF / O-ring (ISO 11926) / Estremità svasata a 37° Triple-Lok®

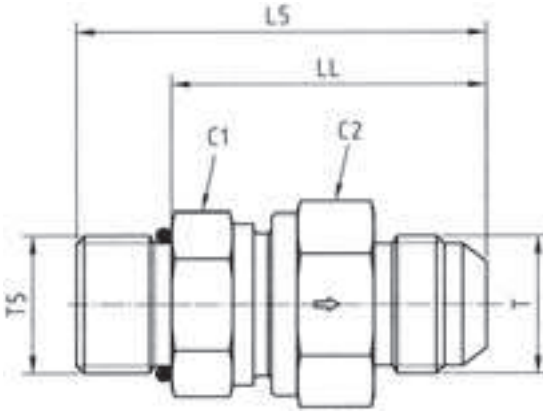

Diam. est. tubo mm	Diam. est. tubo pollici	Filettatura UNF T5	Filettatura JIC SAE T	C1	C2	L5	LL	DN (diam. nomi-nale)	Peso g/1 pezzo	Codice di ordinazione*	PN (bar)[1] CF
6	1/4	7/16-20 UNF	7/16-20 UNF	19	19	49,5	38,5	3,5	92	**4RHV5OMXS**	420
8	5/16	1/2-20 UNF	1/2-20 UNF	22	24	56,5	45,5	5,5	165	**5RHV5OMXS**	420
10	3/8	9/16-18 UNF	9/16-18 UNF	24	27	59,5	47,5	7,5	191	**6RHV5OMXS**	420
12	1/2	3/4-16 UNF	3/4-16 UNF	27	32	66,5	52,5	9,5	277	**8RHV5OMXS**	420
14, 15, 16	5/8	7/8-14 UNF	7/8-14 UNF	32	36	75,0	59,0	11,5	366	**10RHV5OMXS**	350
18, 20	3/4	1 1/16-12 UN	1 1/16-12 UN	41	46	84,0	65,5	15,0	631	**12RHV5OMXS**	350
25	1	1 5/16-12 UN	1 5/16-12 UN	46	50	88,0	69,5	19,0	863	**16RHV5OMXS**	280
28, 30, 32	1 1/4	1 5/8-12 UN	1 5/8-12 UN	60	60	99,5	81,0	24,0	1403	**20RHV5OMXS**	250
35, 38	1 1/2	1 7/8-12 UN	1 7/8-12 UN	65	70	109,5	91,0	29,0	1969	**24RHV5OMXS**	210

[1]) Pressione indicata = Articolo disponibile

$$\frac{\text{PN (bar)}}{10} = \text{PN (MPa)}$$

Consegna senza dado né anello. Per informazioni sull'ordinazione di raccordi completi o sui materiali di tenuta alternativi vedere pag. I7.

*Aggiungere i **suffissi** qui di seguito in base al materiale e alla superficie richiesti.

Suffissi codice di ordinazione			
Materiale	Suffisso superficie e materiale	Esempio	Materiale di tenuta (non occorre suffisso aggiuntivo)
Acciaio, zincato, esente da CromoVI	CF	RHV5OMXSCF	NBR

RHZ5OMXS Valvola di non ritorno

Estremità svasata a 37° Triple-Lok® / Filettatura maschio UN/UNF – O-ring (ISO 11926)

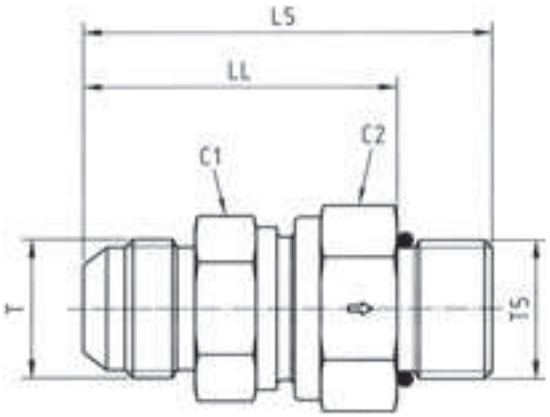

Diam. est. tubo mm	Diam. est. tubo pollici	Filettatura UNF T5	Filettatura JIC SAE T	C1	C2	L5	LL	DN (diam. nomi-nale)	Peso g/1 pezzo	Codice di ordinazione*	PN (bar)[1] CF
6	1/4	7/16-20 UNF	7/16-18 UNF	19	19	49,5	38,5	3,5	91	**4RHZ5OMXS**	420
8	5/16	1/2-20 UNF	1/2-20 UNF	22	24	56,5	45,5	5,5	161	**5RHZ5OMXS**	420
10	3/8	9/16-18 UNF	9/16-18 UNF	24	27	59,5	47,5	7,5	190	**6RHZ5OMXS**	420
12	1/2	3/4-16 UNF	3/4-16 UNF	27	32	66,5	52,5	9,5	278	**8RHZ5OMXS**	420
14, 15, 16	5/8	7/8-14 UNF	7/8-14 UNF	32	36	75,0	59,0	11,5	348	**10RHZ5OMXS**	350
18, 20	3/4	1 1/16-12 UN	1 1/16-12 UN	41	46	84,0	65,5	15,0	634	**12RHZ5OMXS**	350
25	1	1 5/16-12 UN	1 5/16-12 UN	46	50	88,0	69,5	19,0	863	**16RHZ5OMXS**	280
28, 30, 32	1 1/4	1 5/8-12 UN	1 5/8-12 UN	60	60	107,0	81,0	24,0	1397	**20RHZ5OMXS**	250
35, 38	1 1/2	1 7/8-12 UN	1 7/8-12 UN	65	70	109,5	91,0	29,0	2001	**24RHZ5OMXS**	210

[1]) Pressione indicata = Articolo disponibile

$\frac{\text{PN (bar)}}{10}$ = PN (MPa)

Consegna senza dado né anello. Per informazioni sull'ordinazione di raccordi completi o sui materiali di tenuta alternativi vedere pag. I7.

*Aggiungere i **suffissi** qui di seguito in base al materiale e alla superficie richiesti.

Suffissi codice di ordinazione			
Materiale	Suffisso superficie e materiale	Esempio	Materiale di tenuta (non occorre suffisso aggiuntivo)
Acciaio, zincato, esente da CromoVI	CF	4RHZ5OMXSCF	NBR

RHV82EDMXS Valvola di non ritorno

Filettatura maschio metrica – Guarnizione ED (ISO 9974) /
Estremità svasata a 37° Triple-Lok®

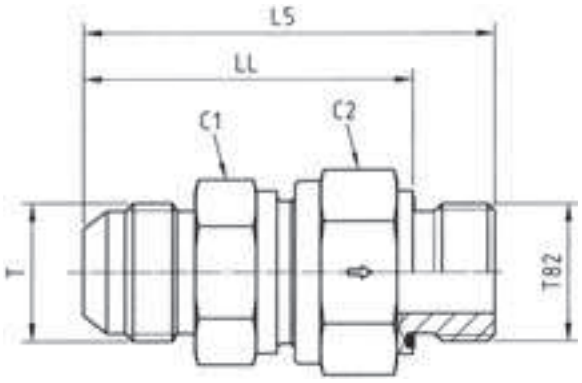

Diam. est. tubo mm	Diam. est. tubo pollici	Filettatura metrica T82	Filettatura JIC SAE T	C1	C2	L5	LL	DN (diam. nominale)	Peso g/1 pezzo	Codice di ordinazione*	PN (bar)[1] CF
6	1/4	M 10×1,0	7/16-20 UNF	19	19	48,0	40,0	3,5	89	**4M10RHV82EDMXS**	420
8	5/16	M 12×1,5	1/2-20 UNF	22	24	59,5	47,5	5,5	157	**5M12RHV82EDMXS**	420
10	3/8	M 14×1,5	9/16-18 UNF	24	27	62,0	50,0	7,5	195	**6M14RHV82EDMXS**	420
12	1/2	M 16×1,5	3/4-16 UNF	27	32	67,0	55,0	9,5	274	**8M16RHV82EDMXS**	420
14, 15, 16	5/8	M 18×1,5	7/8-14 UNF	32	36	73,5	61,5	11,5	369	**10M18RHV82EDMXS**	350
18, 20	3/4	M 27×2,0	1 1/16-12 UN	41	46	84,5	68,5	15,0	628	**12M27RHV82EDMXS**	350
25	1	M 33×2,0	1 5/16-12 UN	46	50	89,5	71,5	19,0	867	**16M33RHV82EDMXS**	280
28, 30, 32	1 1/4	M 42×2,0	1 5/8-12 UN	60	60	102,0	82,0	24,0	1409	**20M42RHV82EDMXS**	250
35, 38	1 1/2	M 48×2,0	1 7/8-12 UN	65	70	113,0	91,0	29,0	1970	**24M48RHV82EDMXS**	210

[1]) Pressione indicata = Articolo disponibile

$$\frac{\text{PN (bar)}}{10} = \text{PN (MPa)}$$

Consegna senza dado né anello. Per informazioni sull'ordinazione di raccordi completi o sui materiali di tenuta alternativi vedere pag. I7.

*Aggiungere i **suffissi** qui di seguito in base al materiale e alla superficie richiesti.

Suffissi codice di ordinazione			
Materiale	Suffisso superficie e materiale	Esempio	Materiale di tenuta (non occorre suffisso aggiuntivo)
Acciaio, zincato, esente da CromoVI	CF	4M10RHV82EDMXSCF	NBR

RHZ82EDMXS Valvola di non ritorno

Estremità svasata a 37° Triple-Lok® / Filettatura maschio metrica – Guarnizione ED (ISO 9974)

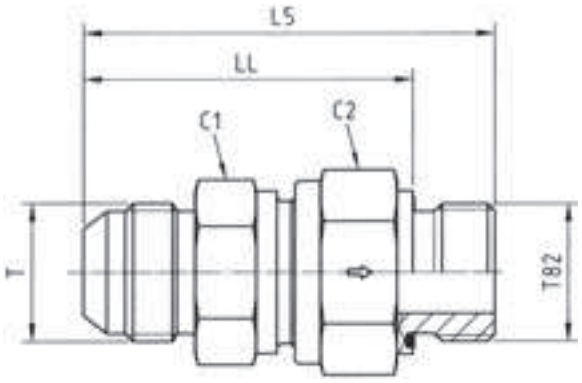

Diam. est. tubo mm	Diam. est. tubo pollici	Filettatura metrica T82	Filettatura JIC SAE T	C1	C2	L5	LL	DN (diam. nominale)	Peso g/1 pezzo	Codice di ordinazione*	PN (bar)[1] CF
6	1/4	M 10×1,0	7/16-20 UNF	19	19	48,0	40,0	3,5	89	**4M10RHZ82EDMXS**	420
8	5/16	M 12×1,5	1/2-20 UNF	22	24	59,5	47,5	5,5	156	**5M12RHZ82EDMXS**	420
10	3/8	M 14×1,5	9/16-18 UNF	24	27	62,0	50,0	7,5	195	**6M14RHZ82EDMXS**	420
12	1/2	M 16×1,5	3/4-16 UNF	27	32	66,0	54,0	9,5	272	**8M16RHZ82EDMXS**	420
14, 15, 16	5/8	M 18×1,5	7/8-14 UNF	32	36	71,5	59,5	11,5	352	**10M18RHZ82EDMXS**	350
18, 20	3/4	M 27×2,0	1 1/16-12 UN	41	46	82,5	66,5	15,0	608	**12M27RHZ82EDMXS**	350
25	1	M 33×2,0	1 5/16-12 UN	46	50	89,5	71,5	19,0	965	**16M33RHZ82EDMXS**	280
28, 30, 32	1 1/4	M 42×2,0	1 5/8-12 UN	60	60	102,0	82,0	24,0	1396	**20M42RHZ82EDMXS**	250
35, 38	1 1/2	M 48×2,0	1 7/8-12 UN	65	70	115,0	93,0	29,0	1807	**24M48RHZ82EDMXS**	210

[1]) Pressione indicata = Articolo disponibile

$$\frac{\text{PN (bar)}}{10} = \text{PN (MPa)}$$

Consegna senza dado né anello. Per informazioni sull'ordinazione di raccordi completi o sui materiali di tenuta alternativi vedere pag. I7.

O

*Aggiungere i **suffissi** qui di seguito in base al materiale e alla superficie richiesti.

Suffissi codice di ordinazione			
Materiale	Suffisso superficie e materiale	Esempio	Materiale di tenuta (non occorre suffisso aggiuntivo)
Acciaio, zincato, esente da CromoVI	CF	4M10RHZ82E1DMXSCF	NBR

KH Valvola a sfera a due vie in acciaio

Estremità conica EO 24° / Estremità conica EO 24°

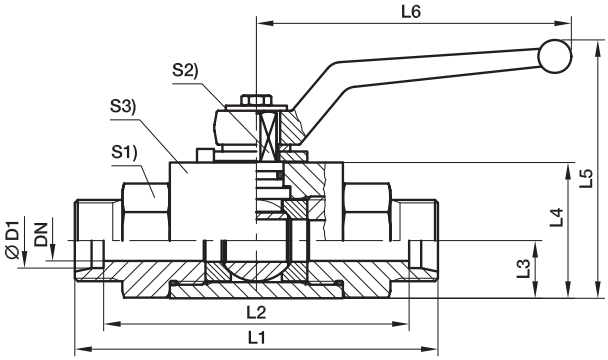

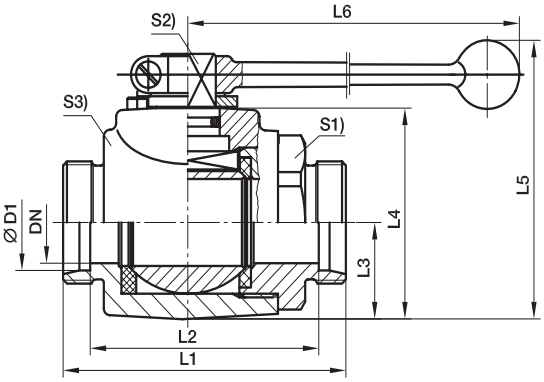

DN 4-25

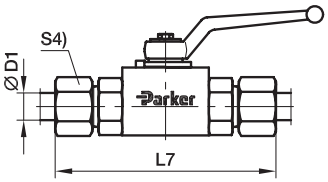

DN 32-40

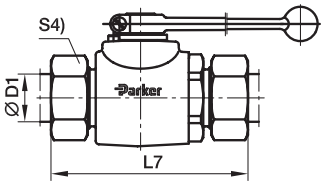

Serie	D1	DN	L1	L2	L3	L4	L5	L6	L7	S1	S2	S3	S4	Peso g/1 pezzo	Codice di ordinazione*	PN (bar)[1]
L[3])	06	4	67	53	10,0	25	55,0	76	82	19	7	20	14	195	**KH06LX**	500
	08	6	67	53	10,0	25	55,0	76	82	19	7	20	17	190	**KH08LX**	500
	10	8	75	61	14,5	35	68,0	100	90	24	8	30	19	420	**KH10LX**	500
	12	10	75	61	14,5	35	68,0	100	90	24	8	30	22	410	**KH12LX**	500
	15	12	83	69	17,0	40	92,0	112	99	30	10	35	27	631	**KH15LX**	500
	18	16	82	67	20,0	45	105,0	166	99	36	11	45	32	850	**KH18LX**	400
	22	20	99	84	24,0	55	113,0	187	116	41	14	45	36	1210	**KH22LX**	400
	28	25	108	93	26,0	60	118,0	187	126	50	14	55	41	1750	**KH28LX**	400
	35	25	116	95	26,0	60	118,0	187	138	50	14	55	50	1820	**KH35LXDN25**	400
	35	32	121	100	36,5	80	180,5	320	143	60	17	73	50	3158	**KH35LX**	315
	42	25	121	99	26,0	60	118,0	187	144	55	14	55	60	1940	**KH42LXDN25**	400
	42	40	118	96	42,5	90	190,5	320	141	70	17	85	60	3788	**KH42LX**	315
S[4])	08	4	73	59	10,0	25	55,0	76	88	19	7	20	19	214	**KH08SX**	500
	10	6	73	58	10,0	25	55,0	76	90	19	7	20	22	220	**KH10SX**	500
	12	8	77	62	14,5	35	68,0	100	94	24	8	30	24	430	**KH12SX**	500
	14	10	81	65	14,5	35	68,0	100	100	24	8	30	27	440	**KH14SX**	500
	16	12	87	70	17,0	40	92,0	112	106	30	10	35	30	649	**KH16SX**	500
	20	16	90	69	20,0	45	105,0	166	112	36	11	45	36	900	**KH20SX**	400
	25	20	107	83	24,0	55	113,0	187	131	41	14	45	46	1290	**KH25SX**	400
	30	25	120	93	26,0	60	118,0	187	146	50	14	55	50	1880	**KH30SX**	400
	38	25	134	102	26,0	60	118,0	187	163	55	14	55	60	1950	**KH38SXDN25**	400
	38	32	127	95	36,5	80	180,5	320	156	60	17	73	60	3266	**KH38SX**	315

[1]) Pressione indicata = Articolo disponibile

[3]) L = Serie leggera; [4]) S = Serie pesante

$$\frac{\text{PN (bar)}}{10} = \text{PN (MPa)}$$

Consegna senza dado né anello. Per informazioni sull'ordinazione di raccordi completi o sui materiali di tenuta alternativi vedere pag. I7.

Suffissi codice di ordinazione			
Materiale	Suffisso superficie e materiale	Esempio	Materiale di tenuta (non occorre suffisso aggiuntivo)
Acciaio, zincato, esente da CromoVI	CF	KH06LCFX	POM / NBR
Acciaio	DIN 50938-FE//A/T4	KH06LX	POM / NBR

KH Valvola a sfera a due vie in acciaio inossidabile

Estremità conica EO 24° / Estremità conica EO 24°

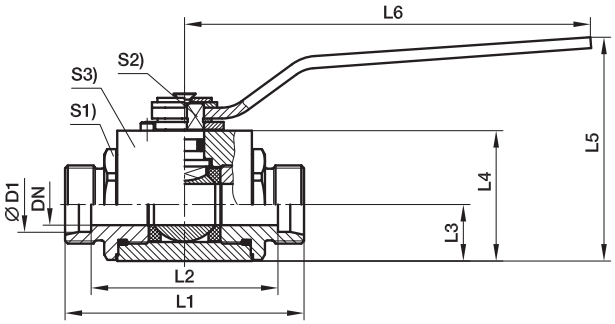

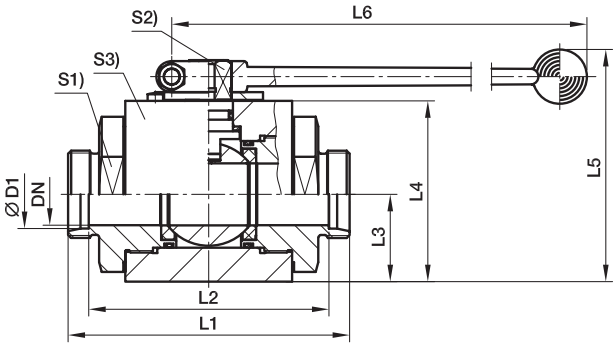

DN 4-25

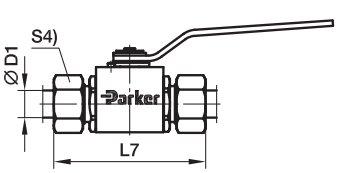

DN 32-40

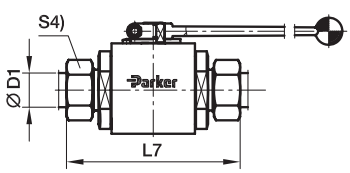

Serie	D1	DN	L1	L2	L3	L4	L5	L6	L7	S1	S2	S3	S4	Peso g/1 pezzo	Codice di ordinazione*	PN (bar)[1] 71
L[3]	06	4	73	59	13,7	30,0	56,5	76	88	22	7	30	14	383	**KH06L71X**	500
	08	6	73	59	13,7	30,0	56,5	76	88	22	7	30	17	381	**KH08L71X**	500
	10	8	87	73	18,0	40,0	84,5	130	102	30	8	40	19	809	**KH10L71X**	500
	12	10	87	73	18,0	40,0	84,5	130	102	30	8	40	22	821	**KH12L71X**	500
	15	12	91	77	21,0	45,0	90,0	130	107	32	10	45	27	1020	**KH15L71X**	500
	18	16/12	91	76	21,0	45,0	90,0	130	108	32	10	45	32	1037	**KH18L71X**	500
	22	20	105	87	31,0	65,0	115,0	185	119	46	14	65	36	1610	**KH22L71X**	420
	28	25	112	92	38,0	75,0	125,0	185	125	50	14	75	41	2032	**KH28L71X**	420
	35	32	145	105	45,0	93,2	175,0	320	148	70	19	100	50	4780	**KH35L71X**	420
	42	40	150	114	52,5	104,4	186,0	320	159	80	19	110	60	7754	**KH42L71X**	420
S[4]	08	4	76	62	13,7	30,0	56,5	76	91	22	7	30	19	392	**KH08S71X**	500
	10	6	76	61	13,7	30,0	56,5	76	93	22	7	30	22	460	**KH10S71X**	500
	12	8	89	74	18,0	40,0	84,5	130	106	30	8	40	24	840	**KH12S71X**	500
	14	10	93	77	18,0	40,0	84,5	130	112	30	8	40	27	847	**KH14S71X**	500
	16	12	96	79	21,0	45,0	90,0	130	115	32	10	45	30	1055	**KH16S71X**	500
	20	16/12	99	78	21,0	45,0	90,0	130	121	32	10	45	36	1079	**KH20S71X**	500
	25	20	113	86	31,0	65,0	115,0	185	134	46	14	65	46	1720	**KH25S71X**	420
	30	25	124	93	38,0	75,0	125,0	185	146	50	14	75	50	2150	**KH30S71X**	420
	38	32	145	100	45,0	93,2	175,0	320	161	70	19	100	60	6066	**KH38S71X**	420

[1]) Pressione indicata = Articolo disponibile

[3]) L = Serie leggera; [4]) S = Serie pesante

$$\frac{\text{PN (bar)}}{10} = \text{PN (MPa)}$$

Consegna senza dado né anello. Per informazioni sull'ordinazione di raccordi completi o sui materiali di tenuta alternativi vedere pag. I7.

*Aggiungere i **suffissi** qui di seguito in base al materiale e alla superficie richiesti.

Suffissi codice di ordinazione			
Materiale	Suffisso superficie e materiale	Esempio	Materiale di tenuta (non occorre suffisso aggiuntivo)
Acciaio inossidabile	Senza suffisso	KH06L71X	POM / NBR

KH Valvola a sfera BSPP a due vie in acciaio

Filettatura femmina BSPP (ISO 1179-1) / Filettatura femmina BSPP (ISO 1179-1)

DN 4-25

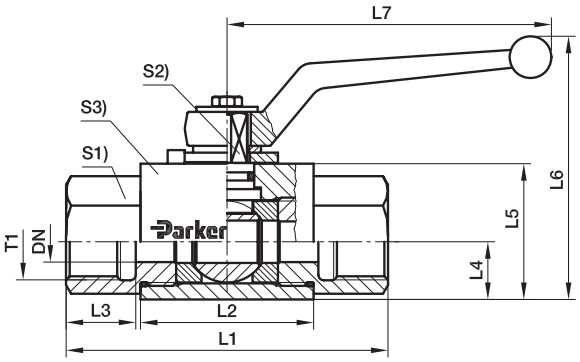

DN 32-40

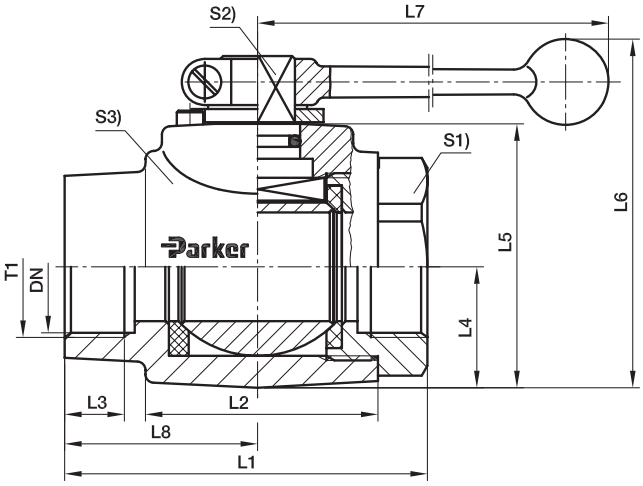

T1	DN	L1	L2	L3	L4	L5	L6	L7	L8	S1	S2	S3	Peso g/1 pezzo	Codice di ordinazione*	PN (bar)[1]
G 1/8	4	69	36,0	12,0	10,0	25	55,0	76	–	19	7	20	220	**KH1/8X**	500
G 1/4	6	69	36,0	12,0	10,0	25	55,0	76	–	19	7	20	210	**KH1/4X**	500
G 3/8	10	73	45,0	14,0	14,5	35	68,0	100	–	24	8	30	430	**KH3/8X**	500
G 1/2	12	82	51,0	15,0	17,0	40	92,0	112	–	30	10	35	670	**KH1/2X**	500
G 5/8	16	88	50,0	18,0	20,0	45	105,0	166	–	36	11	45	973	**KH5/8X**	400
G 3/4	20	93	60,0	18,0	24,0	55	113,0	187	–	41	14	45	1280	**KH3/4X**	400
G 1	25	113	70,0	20,0	26,0	60	118,0	187	–	50	14	55	1982	**KH1X**	400
G 1 1/4	32	110	70,0	20,0	36,5	80	180,5	320	58,5	60	17	73	2620	**KH11/4X**	315
G 1 1/4	25	134	70,0	20,0	26,0	60	118,0	187	–	50	14	55	2066	**KH11/4DN25X**	400
G 1 1/2	40	114	75,0	22,0	42,5	90	190,5	320	57,0	70	17	85	3989	**KH11/2X**	315
G 1 1/2	25	139	70,0	22,0	26,0	60	118,0	187	–	55	14	55	2200	**KH11/2DN25X**	400
G 2	50	129	91,5	27,5	49,5	104	180,0	320	65,0	85	17	99	5020	**KH2X**	400

[1]) Pressione indicata = Articolo disponibile

$$\frac{\text{PN (bar)}}{10} = \text{PN (MPa)}$$

Consegna senza dado né anello. Per informazioni sull'ordinazione di raccordi completi o sui materiali di tenuta alternativi vedere pag. I7.

Suffissi codice di ordinazione			
Materiale	Suffisso superficie e materiale	Esempio	Materiale di tenuta (non occorre suffisso aggiuntivo)
Acciaio, zincato, esente da CromoVI	CF	KH1/8CFX	POM / NBR
Acciaio	DIN 50938-FE//A/T4	KH1/8X	POM / NBR

KH Valvola a sfera BSPP a due vie in acciaio inossidabile

Filettatura femmina BSPP (ISO 1179-1) / Filettatura femmina BSPP (ISO 1179-1)

DN 4-25

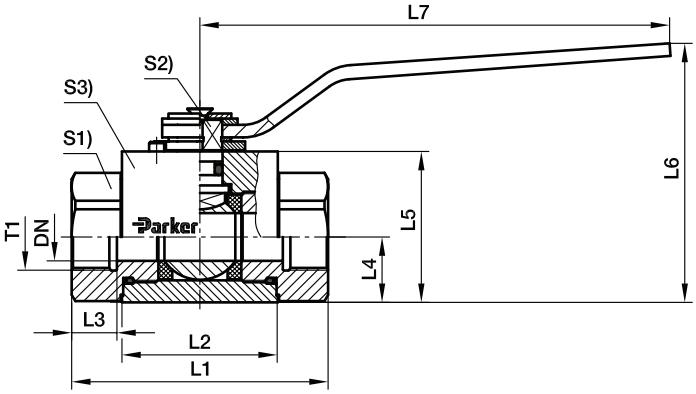

DN 32-40

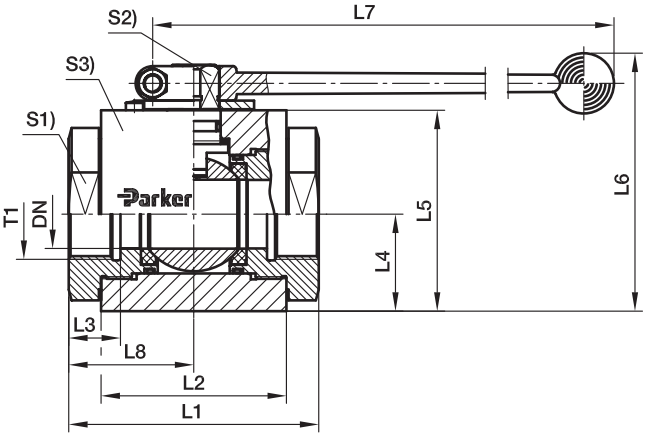

T1	DN	L1	L2	L3	L4	L5	L6	L7	L8	S1	S2	S3	Peso g/1 pezzo	Codice di ordinazione*	PN(bar)[1]) 71
G 1/8	4	69	41	11	13,7	30,0	56,5	76	–	22	7	30	421	**KH1/871X**	500
G 1/4	6	75	41	14	13,7	30,0	56,5	76	–	22	7	30	422	**KH1/471X**	500
G 3/8	10	86	53	14	18,0	40,0	84,5	130	–	30	8	40	891	**KH3/871X**	500
G 1/2	12	92	55	16	21,0	45,0	90,0	130	–	32	10	45	1093	**KH1/271X**	500
G 3/4	20	111	65	18	31,0	65,0	115,0	185	–	46	14	65	1944	**KH3/471X**	420
G 1	25	122	71	20	38,0	75,0	125,0	185	–	50	14	75	2200	**KH171X**	420
G 1 1/4	32	110	86	24	45,0	93,2	175,0	320	55	70	19	100	5300	**KH11/471X**	420
G 1 1/2	40	120	92	26	52,2	104,4	186,0	320	60	80	19	110	7230	**KH11/271X**	420

[1]) Pressione indicata = Articolo disponibile

$$\frac{\text{PN (bar)}}{10} = \text{PN (MPa)}$$

Consegna senza dado né anello. Per informazioni sull'ordinazione di raccordi completi o sui materiali di tenuta alternativi vedere pag. I7.

O

*Aggiungere i **suffissi** qui di seguito in base al materiale e alla superficie richiesti.

Suffissi codice di ordinazione			
Materiale	Suffisso superficie e materiale	Esempio	Materiale di tenuta (non occorre suffisso aggiuntivo)
Acciaio inossidabile	Senza suffisso	KH1/871X	POM / NBR

KH Valvola a sfera NPT a due vie in acciaio

Filettatura femmina NPT (SAE 476) / Filettatura femmina NPT (SAE 476)

DN 4-25

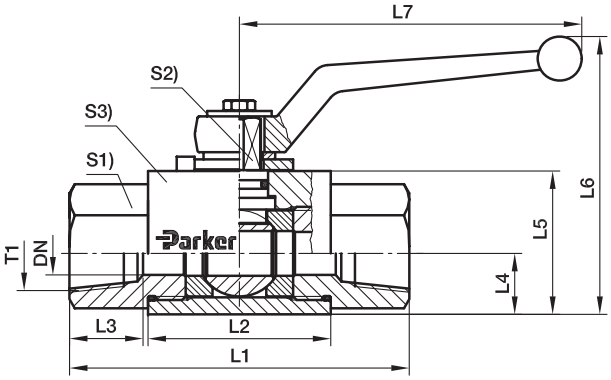

DN 32-40

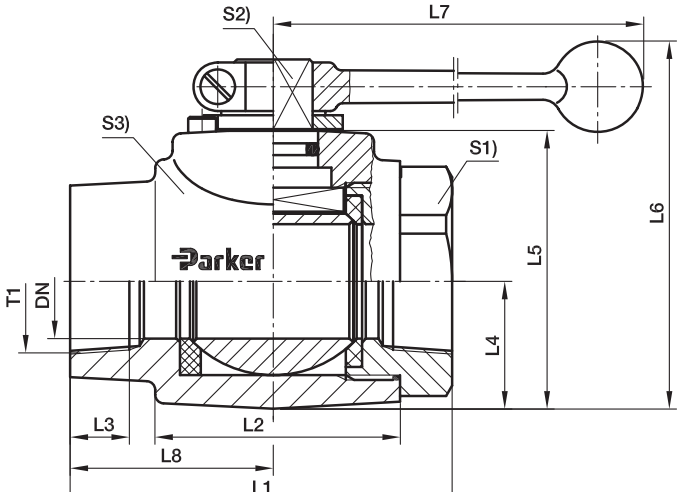

T1	DN	L1	L2	L3	L4	L5	L6	L7	L8	S1	S2	S3	Peso g/1 pezzo	Codice di ordinazione*	PN (bar)[1]
1/8-27 NPT	4	69	36	7,0	10,0	25	55,0	76	–	19	7	20	225	**KH1/8NPTX**	500
1/4-18 NPT	6	69	36	10,0	10,0	25	55,0	76	–	19	7	20	210	**KH1/4NPTX**	500
3/8-18 NPT	10	73	45	10,4	14,5	35	68,0	100	–	24	8	30	430	**KH3/8NPTX**	500
1/2-14 NPT	12	82	51	13,6	17,0	40	92,0	112	–	30	10	35	670	**KH1/2NPTX**	500
3/4-14 NPT	20	93	60	14,0	24,0	55	113,0	187	–	41	14	45	1280	**KH3/4NPTX**	400
1-11,5 NPT	25	113	70	16,8	26,0	60	118,0	187	–	50	14	55	1970	**KH1NPTX**	400
1 1/4-11,5 NPT	32	110	70	17,3	36,5	80	180,5	320	58,5	60	17	73	3074	**KH11/4NPTX**	315
1 1/2-11,5 NPT	40	114	75	17,3	42,5	90	190,5	320	57,0	70	17	85	3976	**KH11/2NPTX**	315

[1]) Pressione indicata = Articolo disponibile

$$\frac{\text{PN (bar)}}{10} = \text{PN (MPa)}$$

Consegna senza dado né anello. Per informazioni sull'ordinazione di raccordi completi o sui materiali di tenuta alternativi vedere pag. I7.

Suffissi codice di ordinazione			
Materiale	Suffisso superficie e materiale	Esempio	Materiale di tenuta (non occorre suffisso aggiuntivo)
Acciaio, zincato, esente da CromoVI	CF	KH1/8NPTCFX	POM / NBR
Acciaio	DIN 50938-FE//A/T4	KH1/8NPTX	POM / NBR

KH Valvola a sfera NPT a due vie in acciaio inossidabile

Filettatura femmina NPT (SAE 476) / Filettatura femmina NPT (SAE 476)

DN 4-25

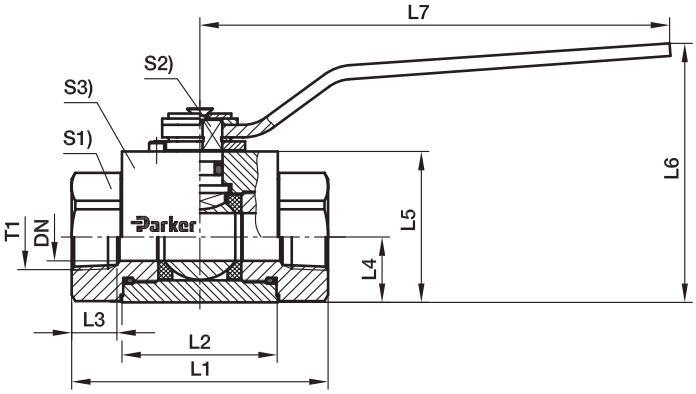

DN 32-40

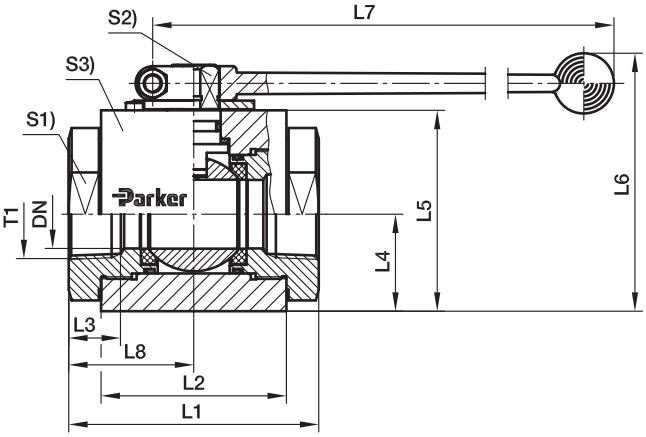

T1	DN	L1	L2	L3	L4	L5	L6	L7	L8	S1	S2	S3	Peso g/1 pezzo	Codice di ordinazione*	PN (bar)[1]) 71
1/8-27 NPT	4	82	41	6,9	13,7	30,0	56,5	76		22	7	30	461	**KH1/8NPT71X**	500
1/4-18 NPT	6	82	41	10,0	13,7	30,0	56,5	76		22	7	30	441	**KH1/4NPT71X**	500
3/8-18 NPT	10	95	53	10,3	18,0	40,0	84,5	130		30	8	40	943	**KH3/8NPT71X**	500
1/2-14 NPT	12	108	55	13,6	21,0	45,0	90,0	130		32	10	45	1177	**KH1/2NPT71X**	500
3/4-14 NPT	20	111	65	14,1	31,0	65,0	115,0	185		46	14	65	2054	**KH3/4NPT71X**	420
1-11,5 NPT	25	122	71	16,8	38,0	75,0	125,0	185		50	14	75	2451	**KH1NPT71X**	420
1 1/4-11,5 NPT	32	110	86	17,3	45,0	93,2	175,0	320	55	70	19	100	5300	**KH11/4NPT71X**	420
1 1/2-11,5 NPT	40	120	92	17,7	52,2	104,4	186,0	320	60	80	19	110	7230	**KH11/2NPT71X**	420

[1]) Pressione indicata = Articolo disponibile

$$\frac{\text{PN (bar)}}{10} = \text{PN (MPa)}$$

Consegna senza dado né anello. Per informazioni sull'ordinazione di raccordi completi o sui materiali di tenuta alternativi vedere pag. I7.

*Aggiungere i **suffissi** qui di seguito in base al materiale e alla superficie richiesti.

Suffissi codice di ordinazione			
Materiale	Suffisso superficie e materiale	Esempio	Materiale di tenuta (non occorre suffisso aggiuntivo)
Acciaio, inossidabile	Senza suffisso	KH1/8NPT71X	POM / NBR

KH Valvola a sfera compatta a 3 vie in acciaio

Estremità conica EO 24° / Estremità conica EO 24° / Estremità conica EO 24°

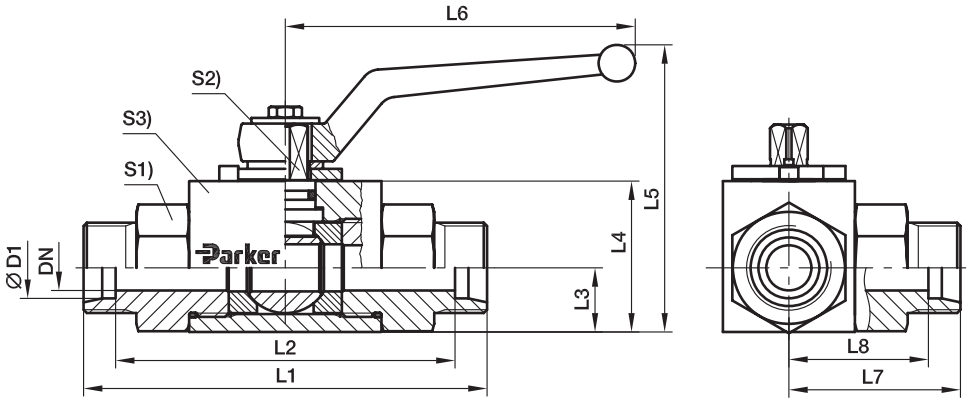

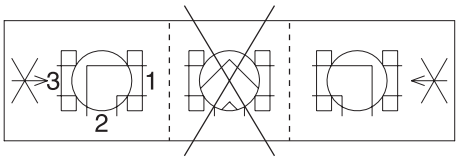

Versione L

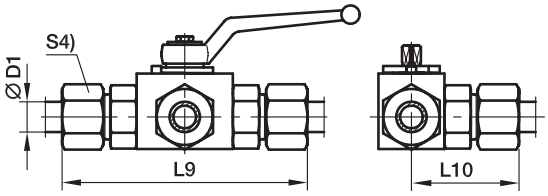

Serie	D1	DN	L1	L2	L3	L4	L5	L6	L7	L8	L9	L10	S1	S2	S3	S4	Peso g/1 pezzo	Codice di ordinazione*	PN (bar)[1])
L[3])	06	4	67	53	15,0	30	59,5	76	33,5	26,5	82	41,0	19	7	30	14	317	**KH3/2-06LX**	500
	08	6	67	53	15,0	30	59,5	76	33,5	26,5	82	41,0	19	7	30	17	214	**KH3/2-08LX**	500
	10	8	75	61	14,5	35	67,5	100	37,5	30,5	90	45,0	24	8	40	19	445	**KH3/2-10LX**	500
	12	10	75	61	14,5	35	67,5	100	37,5	30,5	90	45,0	24	8	40	22	537	**KH3/2-12LX**	500
	15	12	83	69	22,0	45	96,5	112	41,5	34,5	99	49,5	30	10	45	27	678	**KH3/2-15LX**	500
	18	16	82	67	25,0	50	110,0	166	41,0	33,5	99	49,5	36	11	50	32	850	**KH3/2-18LX**	400
	22	20	99	84	29,0	60	126,0	187	49,5	42,0	116	58,0	41	14	55	36	1340	**KH3/2-22LX**	400
	28	25	108	93	31,0	65	131,0	187	54,0	46,5	126	63,0	50	14	65	41	2274	**KH3/2-28LX**	400
S[4])	08	4	73	59	15,0	30	59,5	76	36,5	29,5	88	44,0	19	7	30	19	350	**KH3/2-08SX**	500
	10	6	73	58	15,0	30	59,5	76	36,5	29,0	90	45,0	19	7	30	22	300	**KH3/2-10SX**	500
	12	8	77	62	14,5	35	67,5	100	38,5	31,0	94	47,0	24	8	40	24	469	**KH3/2-12SX**	500
	14	10	81	65	14,5	35	67,5	100	40,5	32,5	100	50,0	24	8	40	27	500	**KH3/2-14SX**	500
	16	12	87	70	22,0	45	96,5	112	43,5	35,0	106	53,0	30	10	45	30	909	**KH3/2-16SX**	500
	20	16	90	69	25,0	50	110,0	166	45,0	34,5	112	56,0	36	11	50	36	949	**KH3/2-20SX**	400
	25	20	107	83	29,0	60	126,0	187	53,5	41,5	131	65,5	41	14	55	46	1714	**KH3/2-25SX**	400
	30	25	120	93	31,0	65	131,0	187	60,0	46,5	146	73,0	50	14	65	50	2462	**KH3/2-30SX**	400

[1]) Pressione indicata = Articolo disponibile

[3]) L = Serie leggera; [4]) S = Serie pesante

$$\frac{\text{PN (bar)}}{10} = \text{PN (MPa)}$$

Consegna senza dado né anello. Per informazioni sull'ordinazione di raccordi completi o sui materiali di tenuta alternativi vedere pag I7.

Suffissi codice di ordinazione			
Materiale	Suffisso superficie e materiale	Esempio	Materiale di tenuta (non occorre suffisso aggiuntivo)
Acciaio, zincato, esente da CromoVI	CF	KH3/2-06LCFX	POM / NBR
Acciaio	DIN 50938-FE//A/T4	KH3/2-06LX	POM / NBR

KH Valvola a sfera compatta BSPP a 3 vie in acciaio

Filettatura femmina BSPP (ISO 1179-1) / Filettatura femmina BSPP (ISO 1179-1) / Filettatura femmina BSPP (ISO 1179-1)

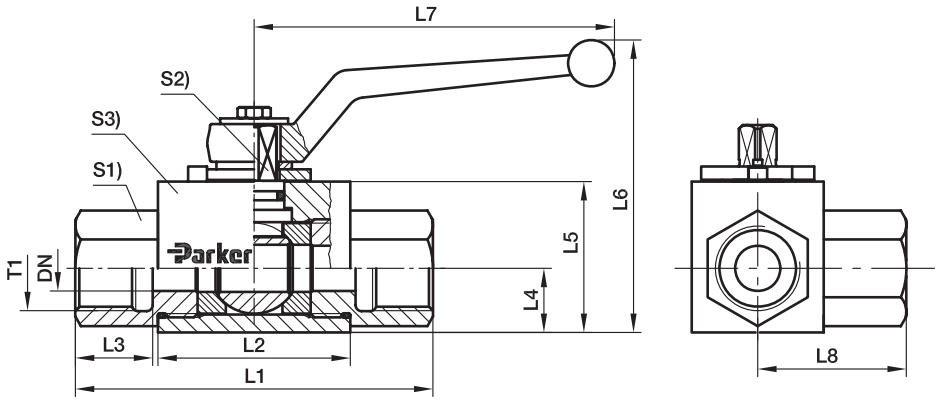

T1	DN	L1	L2	L3	L4	L5	L6	L7	L8	S1	S2	S3	Peso g/1 pezzo	Codice di ordinazione*	PN (bar)[1]
G 1/8	4	69	36	12	15,0	30	55	76	34,5	19	7	30	270	**KH3/2-1/8X**	500
G 1/4	6	69	36	12	15,0	30	55	76	34,5	19	7	30	342	**KH3/2-1/4X**	500
G 3/8	10	73	45	14	14,5	35	68	100	36,5	24	8	40	563	**KH3/2-3/8X**	500
G 1/2	12	82	51	15	22,0	45	92	112	41,0	30	10	45	932	**KH3/2-1/2X**	500
G 3/4	20	93	60	18	29,0	60	113	187	48,0	41	14	55	1724	**KH3/2-3/4X**	400
G 1	25	118	70	20	31,0	65	118	187	56,5	50	14	65	2643	**KH3/2-1X**	400

[1]) Pressione indicata = Articolo disponibile

$$\frac{\text{PN (bar)}}{10} = \text{PN (MPa)}$$

Consegna senza dado né anello. Per informazioni sull'ordinazione di raccordi completi o sui materiali di tenuta alternativi vedere pag. I7.

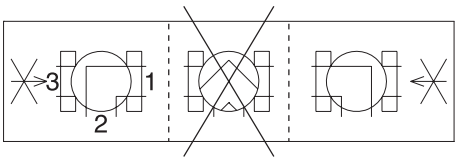

Versione L

*Aggiungere i **suffissi** qui di seguito in base al materiale e alla superficie richiesti.

Suffissi codice di ordinazione			
Materiale	Suffisso superficie e materiale	Esempio	Materiale di tenuta (non occorre suffisso aggiuntivo)
Acciaio, zincato, esente da CromoVI	CF	KH3/2-1/8CFX	POM / NBR
Acciaio	DIN 50938-FE//A/T4	KH3/2-1/8X	POM / NBR

KH – Dispositivo di bloccaggio per valvole a sfera a 2/2 vie e Multivie

con sfera flottante – acciaio e acciaio inossidabile

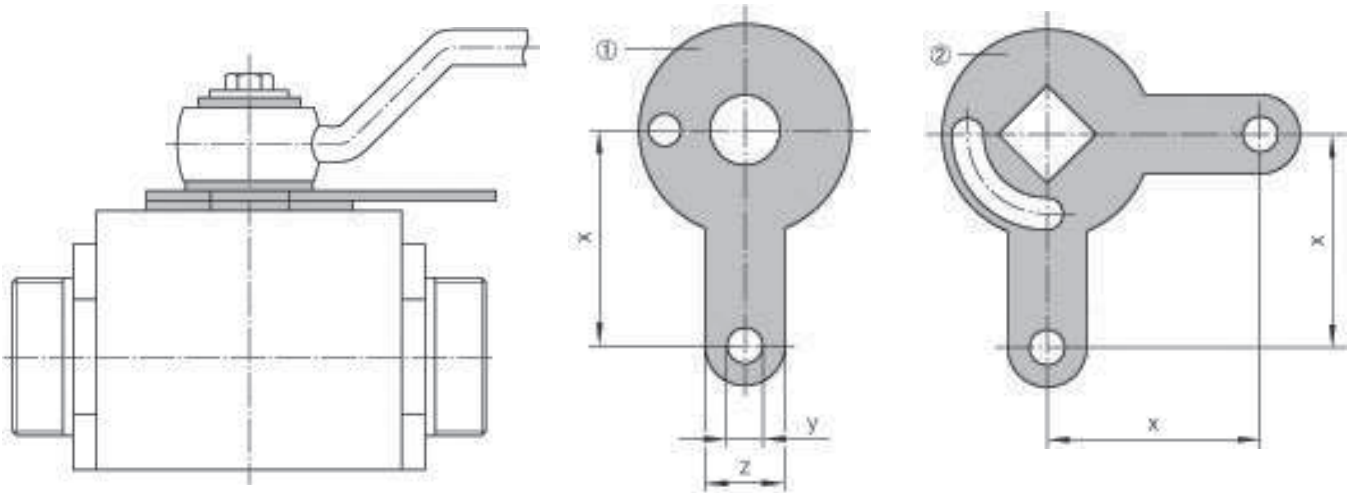

DN	t	x	y	z	X	Codice di ordinazione Acciaio	Codice di ordinazione Acciaio inossidabile
4/6	0,80	18	9	20	21,5	**KHLOCKINGD.SIZE1X**	**KHLOCKINGD.SIZE171X**
8/10	1,20	21	9	20	26,5	**KHLOCKINGD.SIZE2X**	**KHLOCKINGD.SIZE271X**
12	1,20	24	9	20	29,0	**KHLOCKINGD.SIZE3X**	**KHLOCKINGD.SIZE371X**
16	1,50	29	9	20	–	**KHLOCKINGD.SIZE4X**	**–**
20/25	1,50	34	9	20	44,0	**KHLOCKINGD.SIZE5X**	**KHLOCKINGD.SIZE571X**
32/40/50	1,75	54	9	20	54,0	**KHLOCKINGD.SIZE6X**	**KHLOCKINGD.SIZE671X**

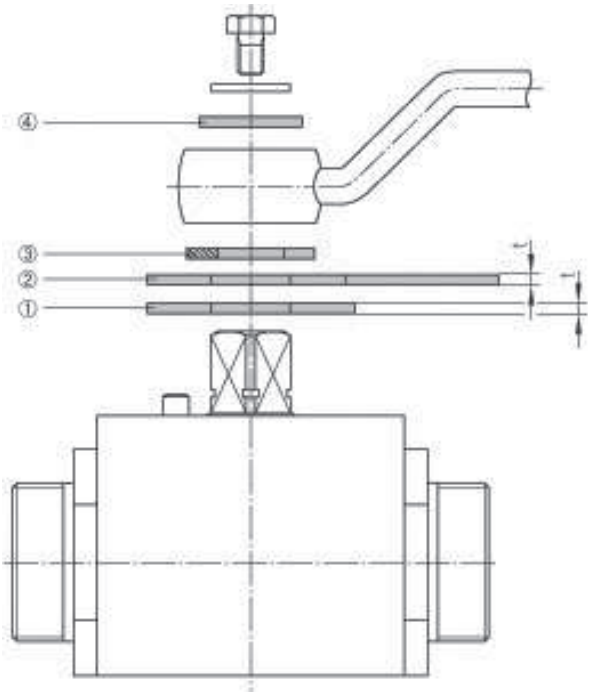

Kit di montaggio:
① = piastra di montaggio
② = piastra punto di arresto
③ = anello di sicurezza
④ = disco

Pos. ④ solo per DN32/40/50

Posizioni di utilizzo

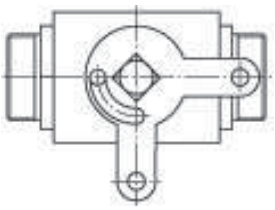

KH-B1V-S Valvola a sfera con connessione a flangia SAE (6000 PSI)

Flangia SAE (ISO 6162-1/-2) / Valvola a sfera a 2/2 vie in acciaio

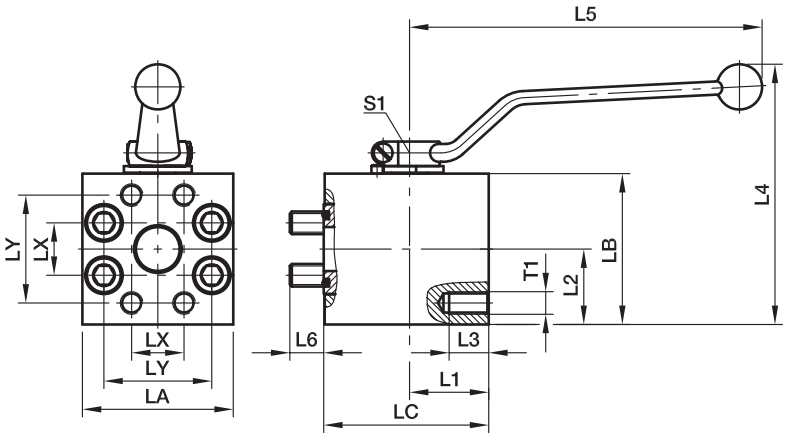

Serie 6000 PSI

Dim. nom. flangia SAE (pollici)	ISO (DN)	L1	L2	L3	L4	L5	L6	LX	LY	LA	LB	LC	S1	T1	Screws (metrico)	O-ring	Peso (Acciaio) Kg/pezzo	Codice di ordinazione*	PN (bar)[1] S
1/2	12	32,0	28,5	19	107	112	13,5	18,2	40,5	60	55	60,5	10	M 8	M 08×65	18,66×3,53	1,29	**KH12B1V62**	420
3/4	20	31,0	35,0	16	134	187	14,0	23,8	50,8	70	70	62,5	14	M10	M 10×65	25,00×3,53	2,15	**KH20B1V63**	420
1	25	39,0	40,0	21	144	187	18,0	27,8	57,2	80	80	75,5	14	M12	M 12×80	32,92×3,53	2,95	**KH25B1V64**	420
1 1/4	32	43,5	50,0	23	129	320	18,0	31,8	66,7	100	100	82,0	17	M12*	M 12×85	37,70×3,53	6,21	**KH32B1V65**	420
1 1/2	40	53,5	60,0	26	149	320	18,0	36,5	79,4	120	120	99,0	17	M16	M 16×100	47,22×3,53	9,50	**KH40B1V66**	420
2	50	61,0	61,5	34	153	320	22,0	44,5	96,8	134	124	109,5	17	M20	M 20×100	56,74×3,53	12,80	**KH50B1V68**	420

[1]) Pressione indicata = Articolo disponibile

La specifica della pressione PN per le valvole a sfera a quarto di giro è applicabile al fattore di progetto 1.5 (in conformità a DIN 3230 T5 e ISO 5208).

$$\frac{\text{PN (bar)}}{10} = \text{PN (MPa)}$$

*M14 disponibile su richiesta. **KH32B1V65/14**

Materiali:
Corpo realizzato in acciaio, rivestimento DIN 50938-FE/A/T4, sfera in acciaio al carbonio cromato duro, stelo in acciaio zincato.

Guarnizioni:
Sede sfera in POM (per es. Delrin), guarnizione stelo in NBR (per es. Perbunan).

Applicazioni:
Indicata per fluido idraulico a base di petrolio, lubrificanti e olio combustibile.
Per applicazioni ad aria indicata fino a 100 bar.

Intervallo di temperatura:
da –10 fino a + 100°C.

*Aggiungere i **suffissi** qui di seguito in base al materiale e alla superficie richiesti.

Suffissi codice di ordinazione			
Materiale	Suffisso superficie e materiale	Esempio	Materiale di tenuta (non occorre suffisso aggiuntivo)
Acciaio, zincato, esente da CromoVI	CF	KH12B1V62CFX	POM / NBR
Acciaio	DIN 50938-FE//A/T4	KH12B1V62X	POM / NBR

KH-B2V-S Valvola a sfera con connessione a flangia SAE (blocco 3000/6000 PSI)

Flangia SAE / Valvola a sfera a 2/2 vie in acciaio
(ISO 6162-1/-2)

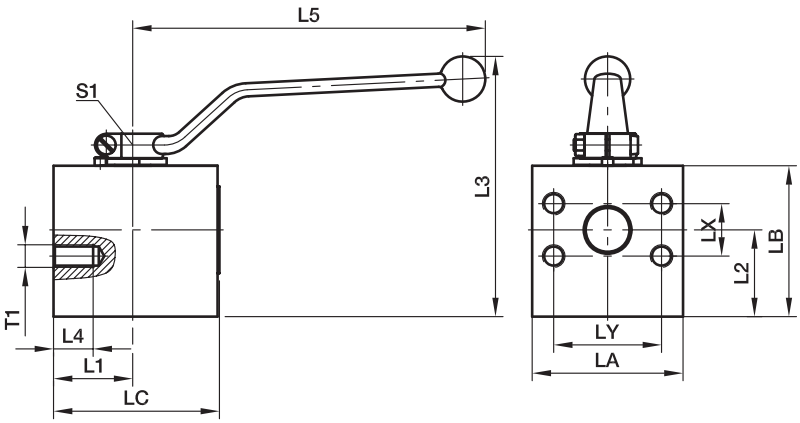

Serie 3000 PSI

Dim. nom. flangia SAE (pollici)	Dim. nom. flangia ISO (DN)	T1 (metr.)	T1 (pollici)	L1	L2	L3	L4	L5	LX	LY	LA	LB	LC	S1	Peso (Acciaio) Kg/pezzo	Codice di ordinazione*	PN (bar)[1] S
1/2	12	**M 8**	**5/16-18 UNC**	23,5	22	97	17	112	17,5	38,1	55	45	60	10	1,1	**KH12B2V32**	210
3/4	20	**M10**	**3/8-16 UNC**	39,5	39	128	21	187	22,2	47,6	70	70	80	14	2,8	**KH20B2V33**	210
1	25	**M12**	**3/8-16 UNC**	42,0	46	138	19	187	26,2	52,4	80	80	88	14	4,0	**KH25B2V34**	210

Serie 6000 PSI

1/2	12	**M 8**	**5/16-18 UNC**	23,5	22	97	17	112	18,2	40,5	55	45	60	10	1,1	**KH12B2V62**	420
3/4	20	**M10**	**3/8-16 UNC**	39,5	39	128	21	187	23,8	50,8	70	70	80	14	2,8	**KH20B2V63**	420
1	25	**M12**	**7/16-16 UNC**	42,0	46	138	19	187	27,8	57,2	80	80	88	14	4,0	**KH25B2V64**	420

[1]) Pressione indicata = Articolo disponibile

La specifica della pressione PN per le valvole a sfera a quarto di giro è applicabile al fattore di progetto 1.5 (in conformità a DIN 3230 T5 e ISO 5208).

$$\frac{\text{PN (bar)}}{10} = \text{PN (MPa)}$$

Materiali:
Corpo realizzato in acciaio, rivestimento DIN 50938-FE/A/T4, sfera in acciaio al carbonio cromato duro, stelo in acciaio zincato.

Guarnizioni:
Sede sfera in POM (per es. Delrin), guarnizione stelo in NBR (per es. Perbunan)

Applicazioni:
Indicata per fluido idraulico a base di petrolio, lubrificanti e olio combustibile.
Per applicazioni ad aria indicata fino a 100 bar.

Intervallo di temperatura:
da –10 fino a + 100°C.

Suffissi codice di ordinazione			
Materiale	Suffisso superficie e materiale	Esempio	Materiale di tenuta (non occorre suffisso aggiuntivo)
Acciaio, zincato, esente da CromoVI	CF	KH12B2V32CFX	POM / NBR
Acciaio	DIN 50938-FE//A/T4	KH12B2V32X	POM / NBR

KH-B3V-S Valvola a sfera con connessione a flangia SAE

Flangia SAE (ISO 6162-1/-2) / Valvola a sfera a 2/2 vie in acciaio

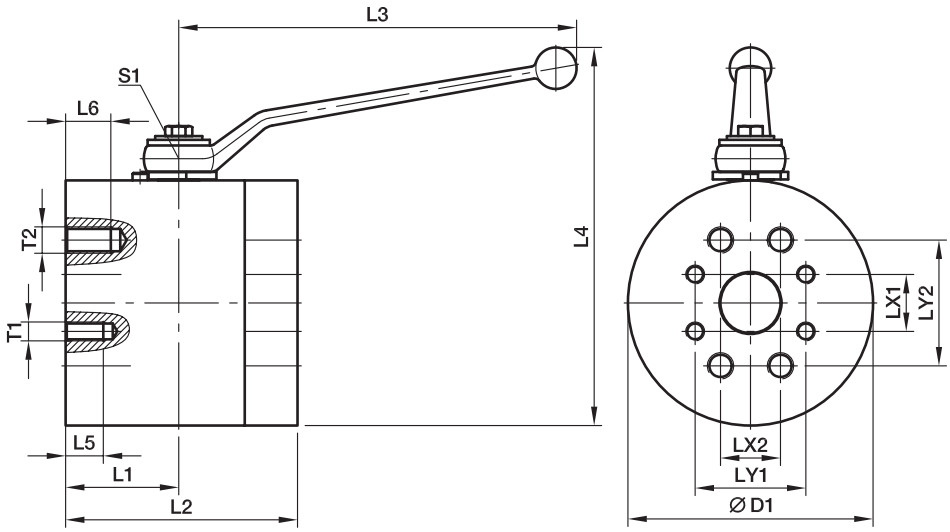

Serie 3000 PSI / Serie 6000 PSI

Dim. nom. flangia SAE (pollici)	ISO (DN)	D1	L1	L2	L3	L4	S1	Connessione 3000 PSI T1	UNC	LX1	LY1	L5	PN	Connessione 6000 PSI T2	UNC	LX2	LY2	L6	PN	Peso (Acciaio) Kg/pezzo	Codice di ordinazione*	PN (bar)[1]
1 1/4	32	130	60	123	320	158,5	17	**M12**	**7/16-14**	30,2	58,7	27	276	**M14**	**1/2-13**	31,8	66,7	24	420	11,3	**KH32B3V35**	420
1 1/2	40	140	61	126	320	168,5	17	**M12**	**1/2-13**	35,7	69,9	25	207	**M16**	**5/8-11**	36,5	79,4	26	420	13,1	**KH40B3V36**	420
2	50	160	79	158	320	178,5	17	**M12**	**1/2-13**	42,8	77,8	25	207	**M20**	**3/4-10**	44,4	96,8	34	420	21,2	**KH50B3V38**	420

[1]) Pressione indicata = Articolo disponibile

La specifica della pressione PN per le valvole a sfera a quarto di giro è applicabile al fattore di progetto 1.5 (in conformità a DIN 3230 T5 e ISO 5208).

$$\frac{PN\ (bar)}{10} = PN\ (MPa)$$

Materiali:
Corpo realizzato in acciaio, rivestimento DIN 50938-FE/A/T4, sfera in acciaio al carbonio cromato duro, stelo in acciaio zincato.

Guarnizioni:
Sede sfera in POM (per es. Delrin), guarnizione stelo in NBR (per es. Perbunan).

Applicazioni:
Indicata per fluido idraulico a base di petrolio, lubrificanti e olio combustibile.
Per applicazioni ad aria indicata fino a 100 bar.

Intervallo di temperatura:
da –10 fino a + 100°C.

Suffissi codice di ordinazione			
Materiale	Suffisso superficie e materiale	Esempio	Materiale di tenuta (non occorre suffisso aggiuntivo)
Acciaio, zincato, esente da CromoVI	CF	KH32B3V35CFX	POM / NBR
Acciaio	DIN 50938-FE//A/T4	KH32B3V35X	POM / NBR

KH-A-S Valvola a sfera con connettore a flangia SAE

Flangia SAE / Valvola a sfera a 2/2 vie in acciaio
(ISO 6162-1/-2)

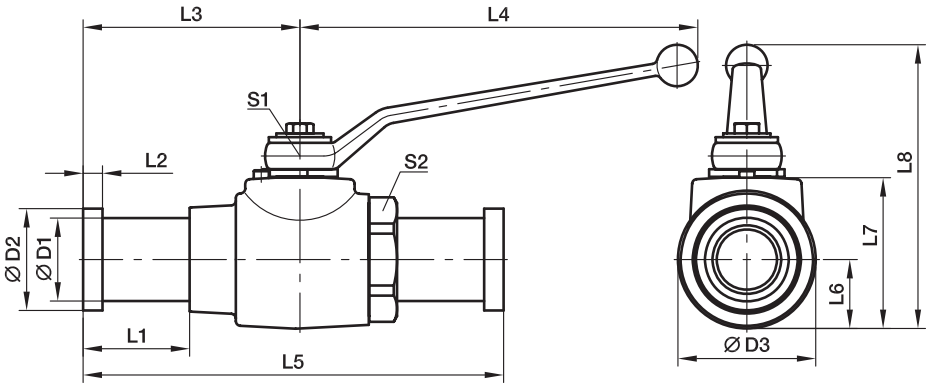

Serie 3000 PSI

Dimensione nom. flangia SAE (pollici)	ISO (DN)	D1	D2	D3	L1	L2	L3	L4	L5	L6	L7	L8	S1	S2	O-ring	Peso (Acciaio) Kg/pezzo	Codice di ordinazione*	PN (bar)[1] S
1/2	12	24	30,2	35	42,0	6,7	75,5	112	151,0	17,0	40	92	10	32	18,66×3,53	0,9	**KH12A32**	350
3/4	20	32	38,1	45	43,0	6,7	81,0	187	162,0	24,0	55	113	14	41	25,00×3,53	1,7	**KH20A33**	315
1	25	38	44,4	55	38,9	8,0	89,0	187	178,0	26,0	60	118	14	50	32,92×3,53	2,5	**KH25A34**	315
1 1/4	32	43	50,8	73	40,3	8,0	99,0	227	190,5	36,5	80	155	17	60	37,70×3,53	3,1	**KH32A35**	276
1 1/2	40	50	60,3	85	58,3	8,0	115,5	227	231,0	42,5	90	165	17	70	47,22×3,53	4,3	**KH40A36**	207
2	50	62	71,4	99	50,9	9,5	116,0	227	232,0	49,5	104	179	17	85	56,74×3,53	5,8	**KH50A38**	207

Serie 6000 PSI

1/2	12	24	31,7	35	42,0	7,7	75,5	112	151,0	17,0	40	92	10	32	18,66×3,53	1,0	**KH12A62**	420
3/4	20	32	41,3	45	49,0	8,8	87,0	187	174,0	24,0	55	113	14	46	25,00×3,53	1,9	**KH20A63**	315
1	25	38	47,6	55	49,0	9,5	99,0	187	198,0	26,0	60	118	14	50	32,92×3,53	2,8	**KH25A64**	315
1 1/4	32	44	54,0	73	56,5	10,3	115,0	227	223,0	36,5	80	155	17	60	37,70×3,53	3,3	**KH32A65**	315
1 1/2	40	51	63,5	85	83,5	12,6	140,5	227	281,0	42,5	90	165	17	70	47,22×3,53	4,8	**KH40A66**	315
2	50	67	79,4	99	93,0	12,6	158,0	227	316,0	49,5	104	179	17	85	56,74×3,53	7,4	**KH50A68**	315

[1]) Pressione indicata = Articolo disponibile

La specifica della pressione PN per le valvole a sfera a quarto di giro è applicabile al fattore di progetto 1.5 (in conformità a DIN 3230 T5 e ISO 5208).

$$\frac{\text{PN (bar)}}{10} = \text{PN (MPa)}$$

Materiali:
Corpo realizzato in acciaio, rivestimento DIN 50938-FE/A/T4, sfera in acciaio al carbonio cromato duro, stelo in acciaio zincato.

Guarnizioni:
Sede sfera in POM (per es. Delrin), guarnizione stelo in NBR (per es. Perbunan).

Applicazioni:
Indicata per fluido idraulico a base di petrolio, lubrificanti e olio combustibile.
Per applicazioni ad aria indicata fino a 100 bar.

Intervallo di temperatura:
da –10 fino a + 100°C.

Suffissi codice di ordinazione			
Materiale	Suffisso superficie e materiale	Esempio	Materiale di tenuta (non occorre suffisso aggiuntivo)
Acciaio, zincato, esente da CromoVI	CF	KH12A63CFX	POM / NBR
Acciaio	DIN 50938-FE//A/T4	KH12A63X	POM / NBR

KH-A-S-71 Valvola a sfera con connettore a flangia SAE

Flangia SAE / Valvola a sfera a 2/2 vie in acciaio inossidabile (ISO 6162-1/-2)

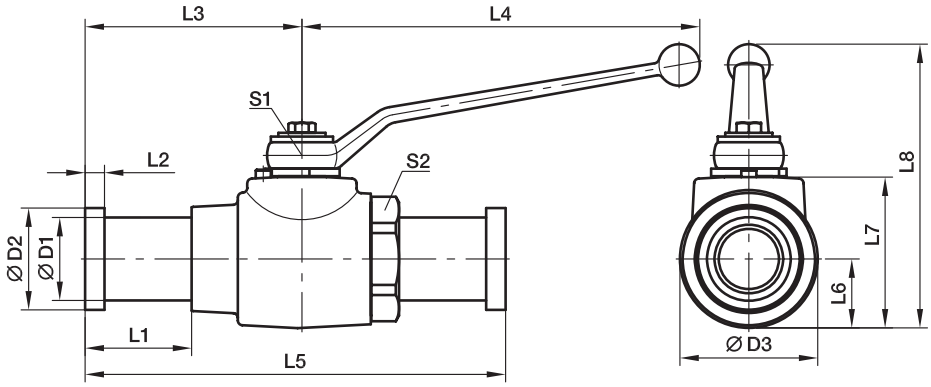

Serie 3000 PSI

Dim. nom. flangia SAE (pollici)	ISO (DN)	D1	D2	L	L1	L2	L3	B	H	H1	H2	SW	SW1	O-ring	Codice di ordinazione*	PN (bar) S
1/2	12	24,0	176,0	42,0	6,8	55	45	45,0	21,0	49,5	32	10	28	18,64×3,53	**KH12A3271**	350
3/4	20	31,5	197,0	43,0	6,8	65	65	65,0	31,0	70,0	46	14	29	24,99×3,53	**KH20A3371**	350
1	25	38,0	200,0	38,9	8,0	71	75	75,0	38,0	80,0	50	14	29	32,92×3,53	**KH25A3471**	315
1 1/4	32	43,0	190,5	40,3	8,0	86	100	93,2	45,0	99,0	70	19	23	37,69×3,53	**KH32A3571**	250
1 1/2	40	50,0	236,5	58,3	8,0	92	110	104,4	52,2	110,0	80	19	23	47,22×3,53	**KH40A3671**	200
2	50	62,0	242,0	50,9	9,6	97	125	119,4	59,7	125,0	95	19	23	56,74×3,53	**KH50A3871**	160

Serie 6000 PSI

1/2	12	24,0	176,0	42,0	7,8	55	45	45,0	21,0	49,5	32	10	28	18,64×3,53	**KH12A6271**	400
3/4	20	32,0	209,0	49,0	8,8	65	65	65,0	31,0	70,0	46	14	29	24,99×3,53	**KH20A6371**	400
1	25	38,0	220,0	49,0	9,5	71	75	75,0	38,0	80,0	50	14	29	32,92×3,53	**KH25A6471**	400
1 1/4	32	44,0	223,0	56,5	10,3	86	100	93,2	45,0	99,0	70	19	23	37,69×3,53	**KH32A6571**	400
1 1/2	40	51,0	287,0	83,5	12,6	92	110	104,4	52,2	110,0	80	19	23	47,22×3,53	**KH40A6671**	400
2	50	67,0	327,0	93,5	12,6	97	125	119,4	59,7	125,0	95	19	23	56,74×3,53	**KH50A6871**	400

La specifica della pressione PN per le valvole a sfera a quarto di giro è applicabile al fattore di progetto 1.5 (in conformità a DIN 3230 T5 e ISO 5208).

Leva manuale in acciaio inossidabile (1.4571)

Corpo: acciaio inossidabile
Sfera di commutazione: acciaio inossidabile
Albero di controllo: acciaio inossidabile
Guarnizione sede sfera: POM
Guarnizione controllo posizione: FKM

Suffissi codice di ordinazione		
Materiale	Suffisso superficie e materiale	Esempio
Acciaio, inossidabile	nessuno	KH12A6271

KH-B4V-S Valvola a sfera con connessione a flangia SAE ISO 6162 (1/2)

Flangia SAE / Valvola a sfera a 2/2

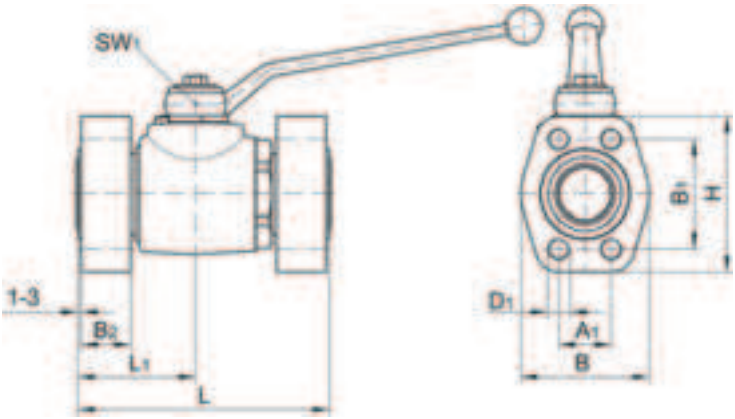

Connessione Porta	DN	Filettatura D	RA	D1	A1	B1	B2	L	L1	B	H	O-ring	Peso Kg	Codice di ordinazione	PN (bar) S
Flangia SAE ISO 6162-1	12*	M 24×1,5	16	M 8	17,5	38,1	20	103	51,5	46	54	18,64×3,53	1,2	**KH12B4V3M**	350
	20*	M 36×2,0	25	M10	22,3	47,6	20	125	62,5	52	65	24,99×3,53	2,0	**KH20B4V3M**	350
	25*	M 42×2,0	30	M10	26,2	52,4	21	138	69,0	59	70	32,92×3,53	2,7	**KH25B4V3M**	315
	32	M 52×2,0	38	M10	30,2	58,7	24	153	71,5	73	79	37,69×3,53	3,8	**KH32B4V3M**	250
	40/32	M 52×2,0	38	M12	35,7	69,9	30	153	71,5	83	94	47,22×3,53	4,9	**KH40/32B4V3M**	200
Vite prigioniera DIN 2353 Serie pesante ISO 8434-1	12*	M 24×1,5	16	5/16-18 UNC	17,5	38,1	20	103	51,5	46	54	18,64×3,53	1,2	**KH12B4V3U**	350
	20*	M 36×2,0	25	3/8-16 UNC	22,3	47,6	20	125	62,5	52	65	24,99×3,53	2,0	**KH20B4V3U**	350
	25*	M 42×2,0	30	3/8-16 UNC	26,2	52,4	21	138	69,0	59	70	32,92×3,53	2,7	**KH25B4V3U**	315
	32	M 52×2,0	38	7/16-14 UNC	30,2	58,7	24	153	71,5	73	79	37,69×3,53	3,8	**KH32B4V3U**	250
	40/32	M 52×2,0	38	1/2-13 UNC	35,7	69,9	30	153	71,5	83	94	47,22×3,53	4,9	**KH40/32B4V3U**	200
Cavità SAE ISO 6162-2	12*	M 24×1,5	16	M 8	18,2	40,5	20	103	51,5	48	56	18,64×3,53	1,4	**KH12B4V6M**	400
	20*	M 36×2,0	25	M10	23,8	50,8	22	125	62,5	60	71	24,99×3,53	2,8	**KH20B4V6M**	400
	25*	M 42×2,0	30	M12	27,8	57,2	24	138	69,0	70	81	32,92×3,53	3,1	**KH25B4V6M**	400
	32	M 52×2,0	38	M12	31,8	66,6	30	153	71,5	78	95	37,69×3,53	4,3	**KH32B4V6M**	400
	40/32	M 52×2,0	38	M16	36,5	79,3	33	153	71,5	95	113	47,22×3,53	5,5	**KH40/32B4V6M**	400
Vite prigioniera DIN 2353 Serie pesante ISO 8434-1	12*	M 24×1,5	16	5/16-18 UNC	18,2	40,5	20	103	51,5	48	56	18,64×3,53	1,4	**KH12B4V6U**	400
	20*	M 36×2,0	25	3/8-16 UNC	23,8	50,8	22	125	62,5	60	71	24,99×3,53	2,8	**KH20B4V6U**	400
	25*	M 42×2,0	30	7/16-14 UNC	27,8	57,2	24	138	69,0	70	81	32,92×3,53	3,1	**KH25B4V6U**	400
	32	M 52×2,0	38	1/2-13 UNC	31,8	66,6	30	153	71,5	78	95	37,69×3,53	4,3	**KH32B4V6U**	400
	40/32	M 52×2,0	38	5/8-11 UNC	36,5	79,3	33	153	71,5	95	113	47,22×3,53	5,5	**KH40/32B4V6U**	400

*)Costruzione in blocco

Per le flange vedere catalogo sezione M
Speciali su richiesta

Corpo:	Acciaio	Acciaio
Sfera di commutazione:	Acciaio cromato	Acciaio cromato
Albero di controllo:	Acciaio	Acciaio
Guarnizione sede sfera:	POM	POM
Guarnizione controllo posizione:	NBR	FKM

Suffissi codice di ordinazione			
Materiale	Suffisso superficie e materiale	Esempio	Materiale di tenuta (non occorre suffisso aggiuntivo)
Acciaio, zincato, esente da CromoVI	CF	KH12B4V3MCFX	POM / NBR
Acciaio	DIN 50938-FE//A/T4	KH12B4V3MX	POM / NBR

KH-B5V-S Valvola a sfera con connessione a flangia DIN EN 1092-1

Acciaio/DIN/girevole

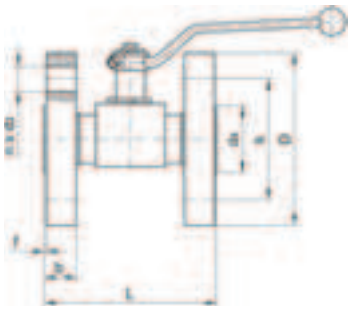

DN 10–DN25

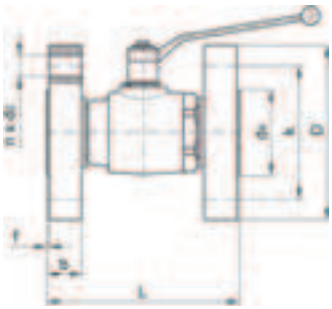

DN 32–DN50

Connessione Porta	DN	D	b	k	d4	f	n	Numero d2	L	Peso Kg	Codice di ordinazione
PN 25 PN 40	10	90	16	60	40	2	4	14	130	2,1	**KH10B5V40**
	15	95	16	65	45	2	4	14	130	2,7	**KH15B5V40**
	20	105	18	75	58	2	4	14	150	3,8	**KH20B5V40**
	25	115	18	85	68	2	4	14	160	4,9	**KH25B5V40**
	32	140	18	100	78	2	4	18	180	7,0	**KH32B5V40**
	40	150	18	110	88	3	4	18	200	8,9	**KH40B5V40**
	50	165	20	125	102	3	4	18	230	12,2	**KH50B5V40**
PN 63	10	100	20	70	40	2	4	14	130	2,9	**KH10B5V63**
	15	105	20	75	45	2	4	14	130	3,5	**KH15B5V63**
	25	140	24	100	68	2	4	18	160	7,6	**KH25B5V63**
	40	170	26	125	88	3	4	22	200	12,6	**KH40B5V63**
	50	180	26	135	102	3	4	22	230	15,3	**KH50B5V63**
PN 100	10	100	20	70	40	2	4	14	130	2,9	**KH10B5V100**
	15	105	20	75	45	2	4	14	130	3,5	**KH15B5V100**
	25	140	24	100	68	2	4	18	160	7,6	**KH25B5V100**
	40	170	26	125	88	3	4	22	200	12,6	**KH40B5V100**
	50	195	28	145	102	3	4	26	230	17,9	**KH50B5V100**
PN 160	10	100	20	70	40	2	4	14	130	2,9	**KH10B5V160**
	15	105	20	75	45	2	4	14	130	3,5	**KH15B5V160**
	25	140	24	100	68	2	4	18	160	7,6	**KH25B5V160**
	40	170	28	125	88	3	4	22	200	13,2	**KH40B5V160**
	50	195	30	145	102	3	4	26	230	18,7	**KH50B5V160**
PN 250	10	125	24	85	40	2	4	18	130	5,0	**KH10B5V250**
	15	130	26	90	45	2	4	18	130	6,2	**KH15B5V250**
	25	150	28	105	68	2	4	22	160	9,5	**KH25B5V250**
	40	185	34	135	88	3	4	26	200	17,2	**KH40B5V250**
	50	200	38	150	102	3	8	26	230	22,6	**KH50B5V250**
PN 320	10	125	24	85	40	2	4	18	130	5,0	**KH10B5V320**
	15	130	26	90	45	2	4	18	130	6,2	**KH15B5V320**
	25	160	34	115	68	2	4	22	160	12,5	**KH25B5V320**
	40	195	38	145	88	3	4	26	200	20,5	**KH40B5V320**
	50	210	42	160	102	3	8	26	230	26,4	**KH50B5V320**
PN 400	10	125	28	85	40	2	4	18	210	6,0	**KH10B5V400**
	15	145	30	100	45	2	4	22	210	9,0	**KH15B5V400**
	25	180	38	130	68	2	4	26	230	17,4	**KH25B5V400**
	40	220	48	165	88	3	4	30	260	31,9	**KH40B5V400**
	50	235	52	180	102	3	8	30	300	38,9	**KH50B5V400**

Dimensioni connessione flange: DIN EN 1092-1 (DIN 2501-1)
Dim. PN 25 – PN 320: DIN EN 558-1 serie 1 (DIN 3202-1-F1)
Dimensioni PN 400: DIN EN 558-1 serie 2 (DIN 3202-1-F2)
Speciali su richiesta

Corpo:	Acciaio	Acciaio	Acciaio
Sfera di commutazione:	Acciaio cromato	Acciaio cromato	Acciaio cromato
Albero di controllo:	Acciaio	Acciaio	Acciaio
Guarnizione sede sfera:	POM	POM	PTFE-Comp. 3
Guarnizione controllo posizione:	NBR	FKM	FKM

Suffissi codice di ordinazione			
Materiale	Suffisso superficie e materiale	Esempio	Materiale di tenuta (non occorre suffisso aggiuntivo)
Acciaio, zincato, esente da CromoVI	CF	KH10B5V40CFX	POM / NBR
Acciaio	DIN 50938-FE//A/T4	KH10B5V40X	POM / NBR

KHBLOCK Valvole a sfera a 2/2 vie per blocco struttura

Acciaio – DN6 – DN50

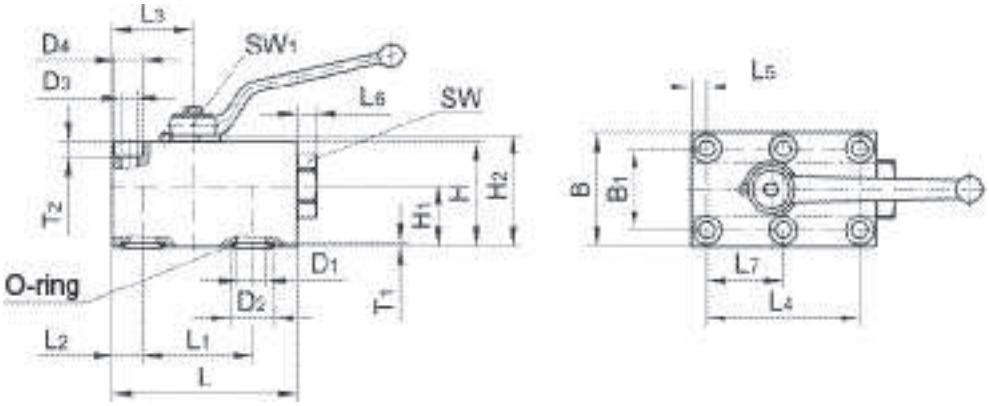

Connessione Porta	DN	L	L1	L2	L3	L4	L5	L6	L7	B	B1	H	H1	H2	T1	T2	D1	D2	D3	D4	SW	SW1	Peso Kg	Codice di ordinazione
Corpo flangia con tenuta O-ring	6	59	35	8,5	23,5	35	8,5	4,5	17,5	40	27	35	20,0	37,5	1,8	6,8	6,0	12,0	6,4	11	24	7	0,58	**KHBLOCKDN6**
	10	73	44	10,0	29,0	55	7,5	7,0	27,5	55	40	45	24,5	48,5	1,8	8,0	9,5	15,0	8,4	–	32	8	1,17	**KHBLOCKDN10**
	12	98	58	16,0	42,5	83	7,5	10,0	41,5	60	45	55	32,0	58,5	1,8	8,0	15,5	25,0	8,4	–	36	10	2,25	**KHBLOCKDN12**
	20	117	69	20,0	52,0	97	10,0	12,0	48,5	70	51	70	39,0	74,0	2,7	11,0	20,0	30,0	10,5	17	–	14	4,00	**KHBLOCKDN20**
	25	138	81	24,0	62,0	115	10,0	7,0	57,5	80	60	80	46,0	84,0	2,7	11,0	24,0	35,0	10,5	17	50	14	5,82	**KHBLOCKDN25**
	32	165	96	29,0	75,0	136	12,0	11,0	68,0	100	78	100	56,6	104,5	2,7	12,0	32,0	40,0	13,0	19	70	17	10,97	**KHBLOCKDN32**
	40	175	112	28,5	84,5	112	28,5	25,0	56,0	130	95	100	52,6	104,5	2,7	17,5	38,0	48,5	17,0	26	–	17	15,25	**KHBLOCKDN40**
	50	215	136	38,0	106,0	136	38,0	25,0	68,0	150	112	110	55,1	114,5	2,7	20,0	48,0	55,5	21,0	33	–	17	23,20	**KHBLOCKDN50**

	DN	D1	E1	E2	E3	E4	E5	E6	E7	E8	M	O-ring
Tolleranze in accordo DIN ISO 2768 Superficie DIN EN ISO 4287	6	6,0	35	35,0	50,5	–	8,5	13,5	20,0	17,5	M 6	7,5×2,5
	10	9,5	44	52,5	63,0	2,5	10,0	20,0	27,5	25,0	M 8	10,5×2,5
	12	15,5	58	74,5	82,0	8,5	16,0	22,5	30,0	33,0	M 8	20,5×2,5
	20	20,0	69	87,0	97,0	10,0	20,0	25,5	35,0	38,5	M10	23,5×3,5
	25	24,0	81	101,0	114,0	14,0	24,0	30,0	40,0	43,5	M10	28,5×3,5
	32	32,0	96	119,0	136,0	17,0	29,0	39,0	50,0	51,0	M12	33,5×3,5
	40	38,0	112	112,0	146,5	–	28,5	47,5	65,0	56,0	M16	42,0×3,5
	50	48,0	136	136,0	177,0	–	38,0	56,0	75,0	68,0	M20	49,0×3,5

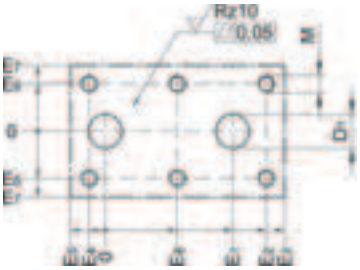

Foro sagomato

Corpo:	Acciaio	Acciaio
Sfera di commutazione:	Acciaio cromato	Acciaio cromato
Albero di controllo:	Acciaio	Acciaio
Guarnizione sede sfera:	POM	POM
Guarnizione controllo posizione:	NBR	FKM

Trattamento superficiale standard: bronzato
Per versione esente da CromoVI aggiungere CF
Esempio: **KHBLOCKDN6CFX**

DV Valvola di intercettazione PN 10, corpo a norma DIN 3512

Estremità conica EO 24° / Estremità conica EO 24°

(con mandrino a filettatura interna)
Per acqua fredda e calda* fino a 80°C, aria compressa, oli minerali e oli combustibili di tipo EL e L, 6 bar e fino a 80°C.
La specifica di pressione PN per valvole di intercettazione ad azionamento manuale è applicabile al fattore di sicurezza 1.5 (in conformità a DIN 3230 T5 e ISO 5208).

Attenzione!
Controllare la pressione nominale consentita per le estremità di tubi EO.

DVAE
Estremità tubo EO ⇐ maschio BSPP

DVAA
Maschio BSPP ⇐ estremità tubo EO

Valvole DV con filettatura maschio BSPP su richiesta.

*Indicare il tipo di acqua o di eventuali additivi.

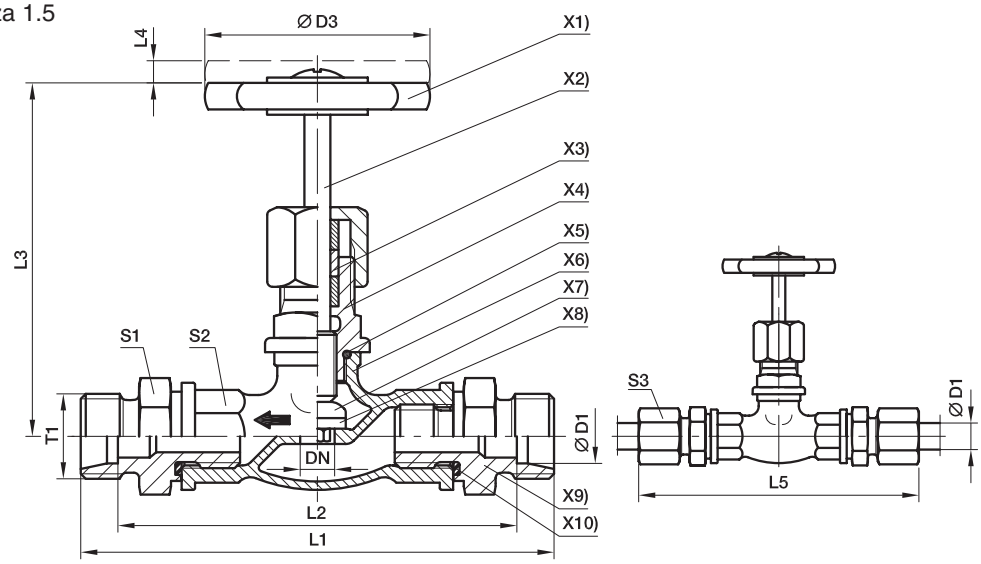

X1)	**Volantino:**	materiale: poliammide
X2)	**Mandrino:**	materiale: ottone 2.0401
X3)	**Guarnizione premistoppa**	mescola PTFE (es. Teflon)
X4)	**Testata:**	materiale: ottone 2.0401
X5)	**Guarnizione:**	O-ring NBR (es. Perbunan)
X6)	**Corpo:**	materiale: ottone 2.0340.02
X7)	**Cono valvola:**	materiale: ottone 2.0401
X8)	**Guarnizione di intercettazione:**	NBR (es. Perbunan)
X9)	**Raccordo terminale maschio:**	materiale: ottone 2.0540
X10)	**Guarnizione:**	Eolastic NBR (es. Perbunan)

Serie	D1	T1	DN	D3	L1	L2	L3	L4	L5	S1	S2	S3	Peso g/1 pezzo	Codice di ordinazione*	PN (bar)[1]) senza superficie
L[3])	06	M 12×1,5	5	50	102	88	63	7	117	22	21	14	313	**DV06LX**	10
	08	M 14×1,5	6	50	102	88	63	7	117	22	21	17	305	**DV08LX**	10
	10	M 16×1,5	8	50	104	90	63	7	119	22	21	19	308	**DV10LX**	10
	12	M 18×1,5	10	50	104	90	63	7	119	22	21	22	304	**DV12LX**	10
	15	M 22×1,5	12	50	107	93	65	8	123	27	25	27	426	**DV15LX**	10
	18	M 26×1,5	16	50	109	94	67	8	126	27	25	32	434	**DV18LX**	10
	22	M 30×2,0	20	60	123	108	67	8	140	32	32	36	670	**DV22LX**	10
	28	M 36×2,0	25	60	140	125	95	10	158	41	38	41	1030	**DV28LX**	10
	35	M 45×2,0	32	70	166	145	102	10	188	50	47	50	1640	**DV35LX**	10

[1]) Pressione indicata = Articolo disponibile
[3]) L = Serie leggera

$$\frac{\text{PN (bar)}}{10} = \text{PN (MPa)}$$

Consegna senza dado né anello. Per informazioni sull'ordinazione di raccordi completi o sui materiali di tenuta alternativi vedere pag. I7.

*Aggiungere i **suffissi** qui di seguito in base al materiale e alla superficie richiesti.

Suffissi codice di ordinazione			
Materiale	Suffisso superficie e materiale	Esempio	Materiale di tenuta (non occorre suffisso aggiuntivo)
Ottone 2.0340.02	Senza suffisso	DV06LX	PTFE / NBR

LD Valvola di intercettazione PN 40

Estremità conica EO 24° / Estremità conica EO 24°

(con mandrino a filettatura interna)
Per oli idraulici, oli minerali, oli combustibili, Diesel, acqua* ecc. Temperature fino a 150°C. Per vapore fino a 10 bar.
Per aria compressa fino a 35 bar su richiesta. CS DIN 8651 Rg.-N.
La specifica di pressione PN per valvole di intercettazione ad azionamento manuale è applicabile al fattore di sicurezza 1.5 (in conformità a DIN 3230 T5 e ISO 5208).

Attenzione!
Controllare la pressione nominale consentita per le estremità di tubi EO.

Connessione tubo EO
Per tubi in rame : dadi, anelli taglienti e anelli di bloccaggio in ottone

Attenzione:
per tubi **in acciaio:** dadi, anelli progressivi in acciaio
specificare al momento dell'ordinazione
Si raccomanda di eseguire il premontaggio in corpo di premontaggio temprato (vedere istruzioni di montaggio).

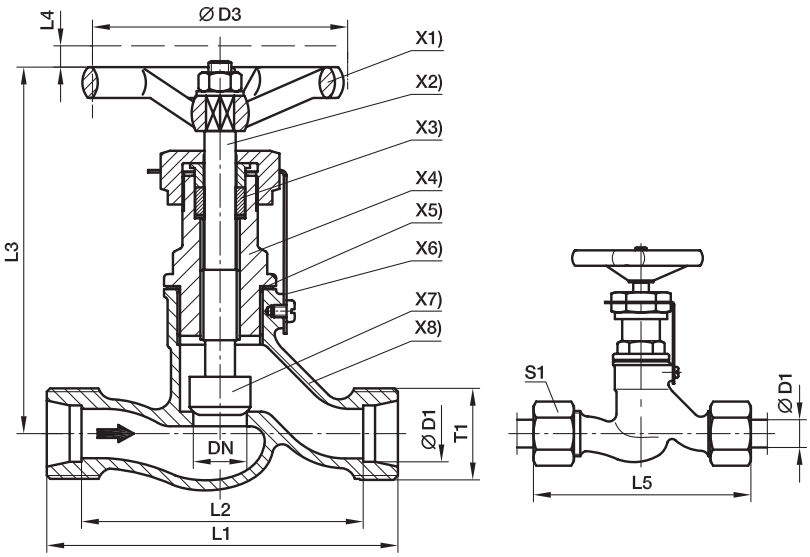

X1)	**Volantino:**	materiale sintetico tipo 74 in conformità a DIN 388 Configurazione C
X2)	**Mandrino:**	con filettatura interna. Materiale: Cu Zn 35 Ni 2
X3)	**Guarnizione premistoppa**	grafite
X4)	**Testata:**	materiale: Cu Zn 39 Pb 3
X5)	**Guarnizione:**	anello in rame
X6)	**Piastre di bloccaggio:**	materiale acciaio 37 zincato
X7)	**Cono valvola:**	punta libera materiale: Cu Zn 35 Ni 2
X8)	**Corpo:**	materiale G-Cu Sn 5Zn Pb (Rg 5 a norma DIN 1705)

Serie	D1	T1	DN	D3	L1	L2	L3	L4	L5	S1	Peso g/1 pezzo	Codice di ordinazione*	PN (bar)[1]) senza superficie
S[4])	10	M 18×1,5	6	63	60	45	98	7	77	22	383	**LD10SX**	40
	12	M 20×1,5	8	63	64	49	98	7	81	24	401	**LD12SX**	40
	14	M 22×1,5	10	63	70	54	98	7	89	27	417	**LD14SX**	40
	16	M 24×1,5	12	80	84	67	110	9	103	30	631	**LD16SX**	40
	20	M 30×2,0	16	80	90	69	110	9	112	36	688	**LD20SX**	40
	25	M 36×2,0	20	100	110	86	129	12	134	46	1191	**LD25SX**	40
	30	M 42×2,0	25	100	120	93	129	12	146	50	1322	**LD30SX**	40
	38	M 52×2,0	32	100	140	108	158	12	169	60	2268	**LD38SX**	40

[1]) **Pressione indicata = Articolo disponibile**
[4]) S = Serie pesante

$$\frac{\text{PN (bar)}}{10} = \text{PN (MPa)}$$

Consegna senza dado né anello. Per informazioni sull'ordinazione di raccordi completi o sui materiali di tenuta alternativi vedere pag. I7.

*Aggiungere i **suffissi** qui di seguito in base al materiale e alla superficie richiesti.

Suffissi codice di ordinazione			
Materiale	Suffisso superficie e materiale	Esempio	Materiale di tenuta (non occorre suffisso aggiuntivo)
Gunmetal (Rg 5) 2.1096	Senza suffisso	LD10SX	Grafite / metallo

VDHA Valvola ad alta pressione

EO 24° Tubo / EO 24° Tubo

Con perno interno filettato ed il corpo in acciaio inox a bassa gradazione. Le specifiche di pressione PN per le operazioni manuali sulle valvole applica un fattore di 1,5 (in accordo DIN 3230 T5 e ISO 5208).

Attenzione!
Controllare la pressione nominale consentita per le estremità di tubi EO.

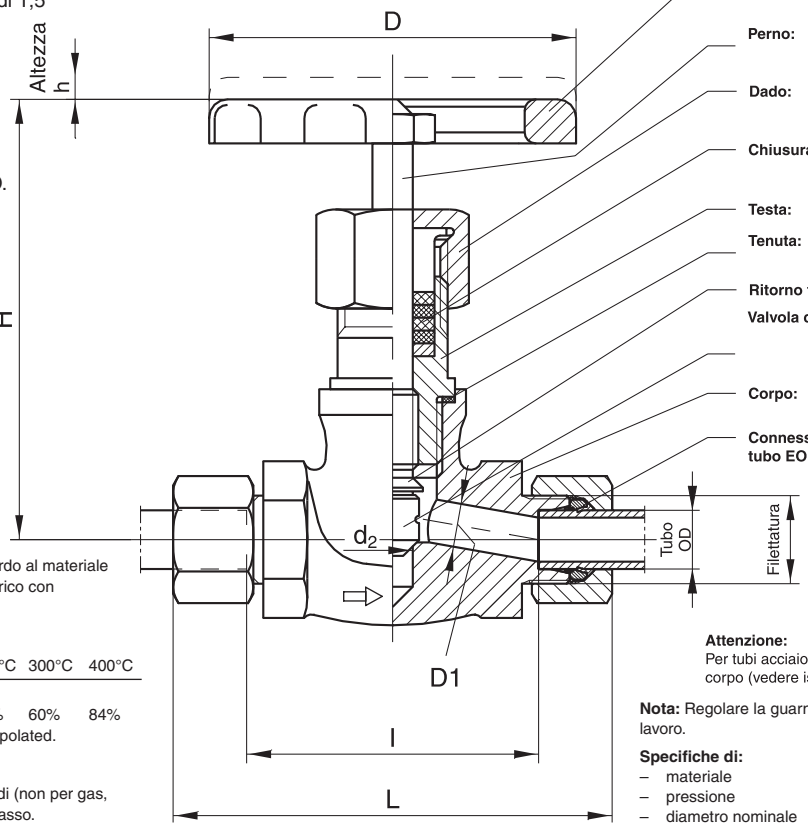

Manopola manuale: Alluminio die casting GD-AL Si 8 Cu 3 Operating position: completamente aperta o chiusa

Perno: con filettatura interna. Materiale 1.4021

Dado: Materiale 1.0718

Chiusura: GA 24 (Grafite)

Testa: Materiale 1.0460

Tenuta: Tra involucro e testa, materiale no. 2.4066

Ritorno tenuta: contro la testa

Valvola cono: materiale punta indurito 1.4122. Per VDHA 30-PS e 38 PS 1.0460 forgiati con cromo 17

Corpo: forgiato. Materiale no. 1.4104

Connessione tubo EO: Dado ed anello progressivo in acciaio per assemblaggio con tubi in acciaio. Per tubi in acciaio inox 1.4571 o 1.4541 e temperatura sopra i 120 °C anello progressivo e dado in acciaio inox 1.4571 (soecificare al momento dell'ordine)

Temperature fino a 400° C in accordo al materiale del tubo (considerare perdite di carico con temperature superiori a 50°C)

Riduzione pressioni richieste

Temperature	50°C	100°C	200°C	300°C	400°C
Riduzione pressioni	6%	15%	37%	60%	84%

Intermediate values are to be interpolated.

Applicazioni:
Per acqua, vapore, olii caldi e freddi (non per gas, ossigeno) olii minerali a base di grasso.
Per aria compressa fino a 50°C. Per fluidi corrosivi acidi, fluidi resistenti al fuoco ecc.

Attenzione:
Per tubi acciaio inox fare sempre il pre-assemblaggio del corpo (vedere istruzioni di assemblaggio)

Nota: Regolare la guarnizione premistoppa prima di iniziare il lavoro.

Specifiche di:
- materiale
- pressione
- diametro nominale
- marchio di identificazione su rondella manuale

Serie	D1	PN (bar)	DN	Filettatura	d2	H	L	l	h	D	Peso g/1 pezzo	Con dado e O-ring Dry Technology EO-2	PSR Acciaio
S[4])	06	630	4	M 14×1,5	9,5	120	95	66	6	100	891	**VDHA06ZS**	**VDHA06S**
	08	630	5	M 16×1,5	9,5	120	95	66	6	100	917	**VDHA08ZS**	**VDHA08S**
	10	630	7	M 18×1,5	9,5	120	97	65	6	100	937	**VDHA10ZS**	**VDHA10S**
	12	630	8	M 20×1,5	9,5	120	97	65	6	100	940	**VDHA12ZS**	**VDHA12S**
	14	630	10	M 22×1,5	9,5	120	119	84	6	100	1194	**VDHA14ZS**	**VDHA14S**
	16	400	11	M 24×1,5	9,5	120	119	83	6	100	1209	**VDHA16ZS**	**VDHA16S**
	20	400	13	M 30×2,0	11,0	120	122	79	6	100	1292	**VDHA20ZS**	**VDHA20S**
	25	400	17	M 36×2,0	12,0	143	154	106	9	125	2013	**VDHA25ZS**	**VDHA25S**
	30	250	19	M 42×2,0	22,5	164	156	103	12	125	2596	**VDHA30ZS**	**VDHA30S**
	38	250	25	M 52×2,0	26,5	198	179	118	12	180	4972	**VDHA38ZS**	**VDHA38S**

[1]) Pressione indicata = Articolo disponibile
[4]) S = Serie pesante

$$\frac{PN\ (bar)}{10} = PN\ (MPa)$$

WV Valvola aperta/chiusa

Estremità conica EO 24° / Estremità conica EO 24° / Estremità conica EO 24°

Queste valvole consentono il passaggio del flusso verso l'uscita dall'ingresso 1 o 2 indifferentemente, mentre si chiude la connessione di ingresso non utilizzata. La chiusura di un ingresso si ottiene tramite una sfera flottante che si sposta grazie alla pressione esercitata dal flusso.

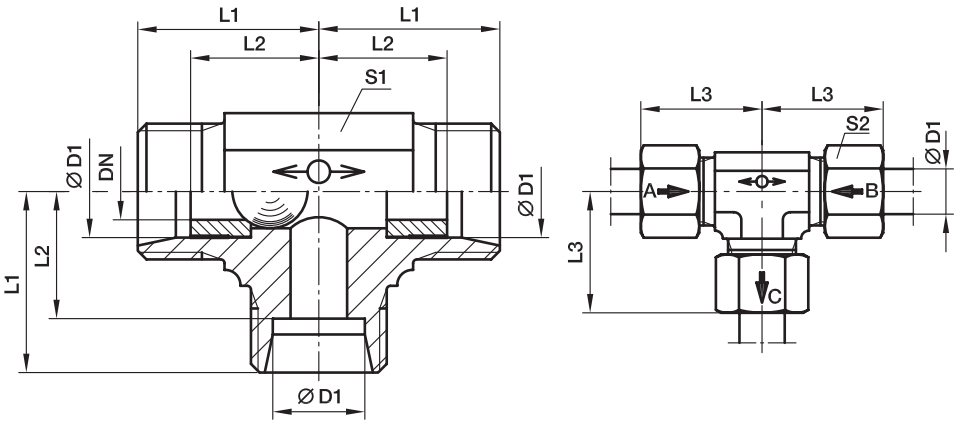

Materiale: acciaio
Finitura superficiale: Esente da CromoVI.

Si sconsiglia l'utilizzo di valvole con aria compressa e gas.
Le valvole WV non devono essere utilizzate con nippli a saldare, dadi girevoli ecc. se nel cono interno non c'è contatto con un dispositivo di arresto.

Intervallo di temperatura senza riduzioni di pressione da –40°C a +120°C.

Posizione consigliata del raccordo come mostrato nella figura.

Percentuale di perdita per valvole aperte/chiuse test idraulico con pressione test P_{max}: circa 20 gocce (durata del test 1 minuto).

Direzioni del flusso:

$D_1 \rightarrow D_3 = D_2$ chiuso
$D_2 \rightarrow D_3 = D_1$ chiuso

Serie	D1	T1	DN	L1	L2	L3	S1	S2	Peso g/1 pezzo	Codice di ordinazione*	PN (bar)[1] CF
L[3])	8	M 14×1,5	4,5	21	14	29	14	17	53	**WV08LOMD**	160
	10	M 16×1,5	6,0	22	15	30	17	19	73	**WV10LOMD**	160
	12	M 18×1,5	7,5	24	17	32	19	22	96	**WV12LOMD**	160
	15	M 22×1,5	10,0	28	21	36	19	27	134	**WV15LOMD**	160

[1]) **Pressione indicata = Articolo disponibile**
[3]) L = Serie leggera

$\frac{PN\ (bar)}{10} = PN\ (MPa)$

Consegna senza dado né anello. Per informazioni sull'ordinazione di raccordi completi o sui materiali di tenuta alternativi vedere pag. I7.

*Aggiungere i **suffissi** qui di seguito in base al materiale e alla superficie richiesti.

Suffissi codice di ordinazione			
Materiale	Suffisso superficie e materiale	Esempio	Materiale di tenuta (non occorre suffisso aggiuntivo)
Acciaio, zincato, esente da CromoVI	CF	WV08LOMDCF	Sfera in acciaio

ELA Valvole di sfiato

Le valvole di sfiato ELA consentono uno scarico efficace dei sistemi idraulici.

Semplici da montare – Non richiedono manutenzione – Durata di esercizio praticamente illimitata – facili da usare – sicure – affidabili – efficienti. Il sistema può essere messo in funzione immediatamente dopo il montaggio. Nessuna anomalia di comando dovuta alla penetrazione di aria nel fluido sotto pressione. Economiche: consentono di eliminare i tempi morti di deareazione.

Sfiato tra: pressione di apertura 0,05 bar
pressione di chiusura e ≧ 0,5 bar

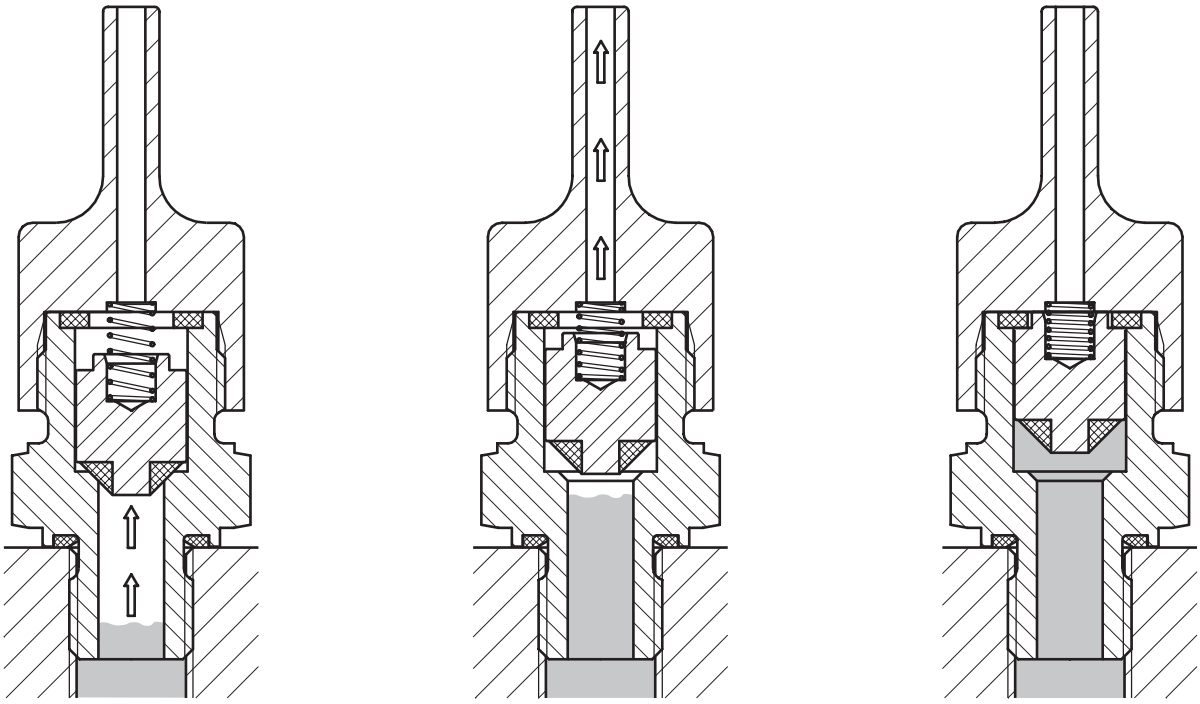

PRIMA DELLO SCARICO
Sistema depressurizzato

FUGHE D'ARIA
Sistema in funzione
(0,05 bar)

ARIA ELIMINATA
Sistema sotto pressione
(≧ 0,5 bar)

Il principio di funzionamento della valvola di sfiato si basa sulla differenza di comportamento di gas e liquidi sotto pressione, a seconda del loro grado di viscosità. Un pistone, alloggiato nell'alesaggio del corpo con un determinato gioco, effettua l'apertura e la chiusura della valvola all'avvio o all'arresto del sistema. Alla messa in funzione dell'impianto, l'aria accumulata fuoriesce fino a che la colonna del liquido del fluido sotto pressione non raggiunge il pistone. La pressione del liquido solleva il pistone contro la guarnizione superiore per alte pressioni, chiudendo in tal modo lo sfiato d'aria (è possibile che si verifichi una leggera fuoriuscita d'olio). Quando la pressione diminuisce, la molla rilascia il pistone consentendo la riapertura dello sfiato d'aria, dopodiché la procedura può essere ripetuta. La speciale struttura del pistone evita l'aspirazione dell'aria in caso di vuoto parziale.

La valvola di sfiato deve essere sistemata in posizione verticale, nel punto più alto del sistema idraulico o in posizioni in cui possono verificarsi accumuli d'aria.

Le valvole di sfiato ELA sono disponibili unicamente nella versione per fluidi a base di olio minerale e devono essere utilizzate con temperature di esercizio comprese tra –20°C e +90°C.

ELA Valvole di sfiato

Filettatura maschio BSPP con guarnizione Eolastic

PN (bar)	Dry Technology Acciaio	Peso g/1 pezzo
400	**ELA1/4EDCF**	109

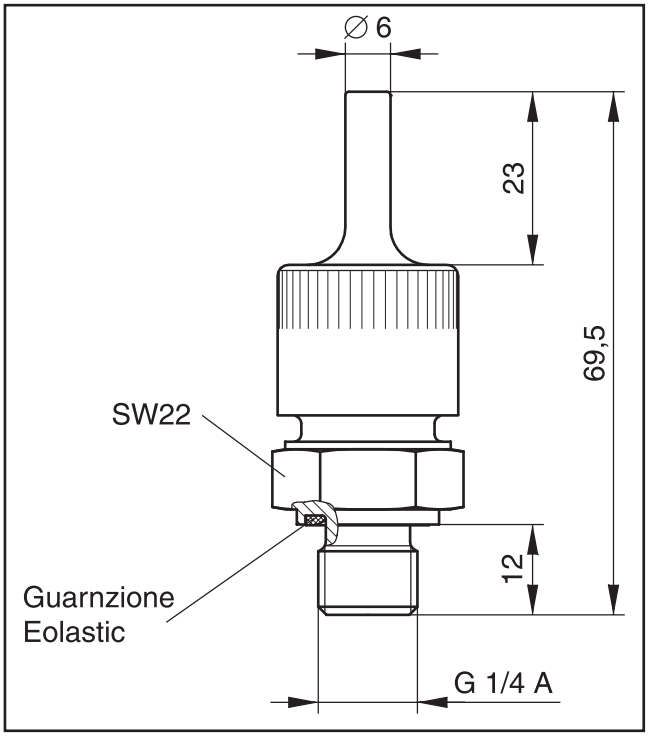

Dado girevole EO

PN (bar)	Dry Technology Acciaio	Peso g/1 pezzo
315	**ELAE10LCF**	125

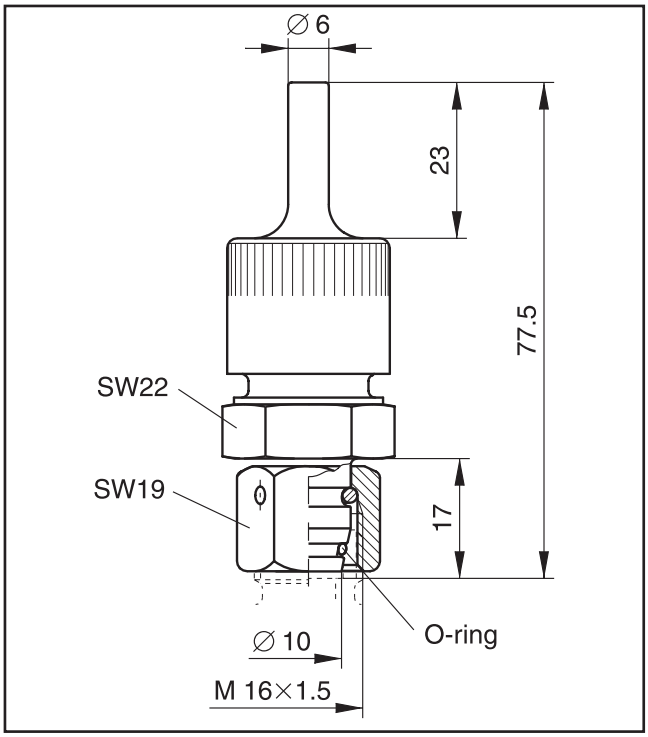

LRV Valvola di sicurezza contro eventuali rotture dei tubi

Connessione secondo – ED (ISO 1179) / Estremità conica EO 24°

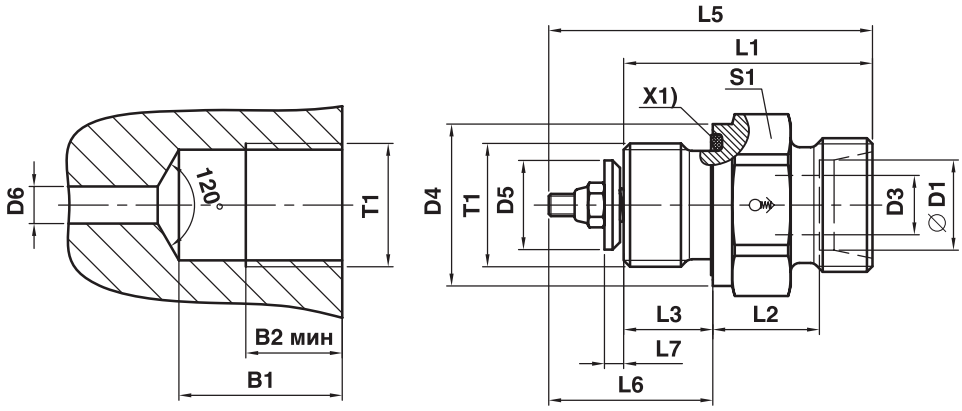

D1	T1	D3	D4	D5	D6	L1	L2	L3	L5	S1	B1	B2	Peso g/1 pezzo	Codice di ordinazione*	PN (bar)
08	G 1/4 A	6.0	19	9.8	5	32.0	13.0	12	42	19	24	13	37	**LRV08LRED*½OCF**	400
12	G 3/8 A	9.0	22	12.0	8	33.5	14.5	12	44	22	24	13	53	**LRV12LRED*½OCF**	400
15[1])	G 3/8 A	9.0	22	12.0	8	33.5	14.5	12	44	22	24	13	53	**LRV15LRED*½OCF**	400
15[1])	G 1/2 A	14.0	27	16.0	12	37.0	15.5	14	51	27	28	15	84	**LRV15LRED*½OCF**	400
18	G 1/2 A	14.0	27	16.0	12	37.0	15.5	14	51	27	28	15	84	**LRV18LRED*½OCF**	400
22	G 3/4 A	17.5	32	20.0	16	41.0	17.5	16	56	32	32	17	121	**LRV22LRED*½OCF**	250

Versione con O-ring e alternativa connessione su richiesta!

[1]) Size 15L dipende dalla $Q_{max.}$!

Codice di ordinazione – suffisso			
Materiale	Suffisso di identificazione modello	Esempio	Materiale di tenuta standard (nessun suffisso di identificazione supplementare necessario)
Acciaio, zincato, esente da CromoVI	10Q	LRV08LRED10QOCF	NBR (impostato su Q 10 l/min)
Acciaio, zincato, esente da CromoVI	17Q 0,5D	LRV18LRED17Q0,5DOCF	NBR (impostato su Q 17 l/min foro calibrato di strozzamento D = 0,5 mm)

Integrare i codici di ordinazione con i suffissi di identificazione del modello desiderato.

*1 = Volume di chiusura Q (l/min): da 9 a 17 connessione 08L da 15 a 75 connessione 18L
da 10 a 24 connessione 12L da 45 a 130 connessione 22L

*2 = foro calibrato di strozzamento D (mm): 0,5/0,8/1,0/1,5

Fornito senza dado e anello tagliente.

Alloggiamento	Acciaio, zincato, esente da CromoVI
Testa della valvola	Acciaio
Molla	Acciaio
Inserto	Alluminio
Vite	Acciaio, zincato
Dado	Acciaio, zincato, autobloccante
Guarnizione	Spigolo di tenuta acciaio/acciaio
Pressione di esercizio	Vedere tabella
Temperatura	da –40°C a +120°C
Fluido	Olio minerale
Posizione di montaggio	a piacere